ROHM SEMICONDUCTOR

Data Sheet

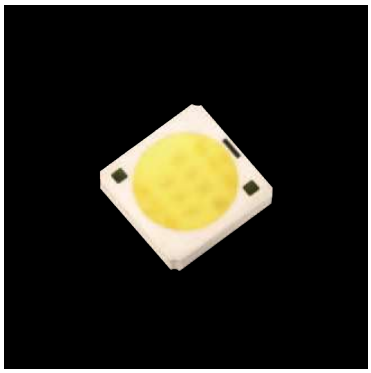

PSL0102 series

Features

- High Power White LEDs "SSML series"
- Achieves operation temperature of 130˚C
- High reliability package due to anti-sulfur measures

Color Type: WB

Specifications

Part No.	Chip Structure	Emitting Color	Color Rending Index (Ra)	Absolute Maximum Ratings (Ta=25˚C) Power Dissipation P_D (mW)	Forward Current I_F (mA)	Peak Forward Current I_{FP}(mA)	Operating Temperature Topr(˚C)	Storage Temperature Tstg(˚C)	Electrical and Optical Characteristics (Ta=25˚C) Forward Voltage V_F Typ.(V)	I_F(mA)	Chromaticity (x, y)	I_F(mA)	Luminous Intensity I_V Min. (cd)	Typ. (cd)	I_F(mA)	Luminous Flux Φ_V Typ. (lm)	I_F(mA)	Luminous Efficiency (lm/W)
PSL0102WBEA	InGaN	White (5,000K)	65	0.78	200※1	400※2	-40 to +130	-40 to +130	3.3	120	(0.345, 0.352)	120	8.2	12	120	44	120	100
PSL0102WBEB			80										5.4	10.8		38		95
PSL0102WBEC			90											8.2		30		75
PSL0102WBED			74										8.2	11.6		42		75
PSL0102WBFA		White (3,000K)	65								(0.437, 0.404)		8.2	10.6		37		93
PSL0102WBFB			80										5.4	8.5		31		78
PSL0102WBFC			90											7		25		63
PSL0102WBFD			75										8.2	10.6		37		93

※1:Mounting condition must be carefully considered ※2:Duty≦1/10, ≦10ms max.

White Chromaticity Diagram

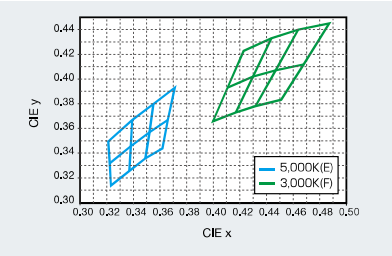

Spectram Data

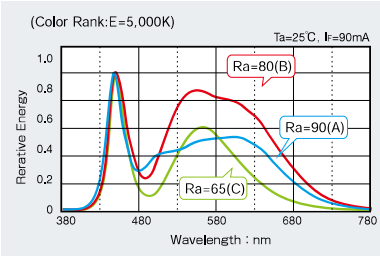

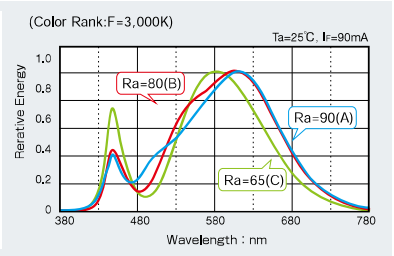

Dimensions

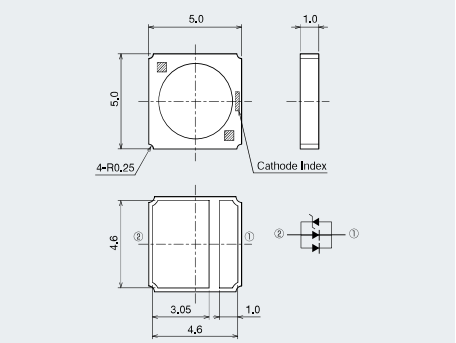

Recommended Solder Pattern

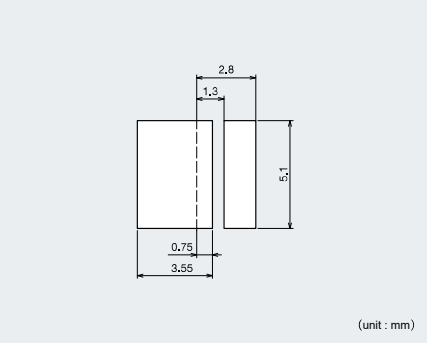

Viewing Angle

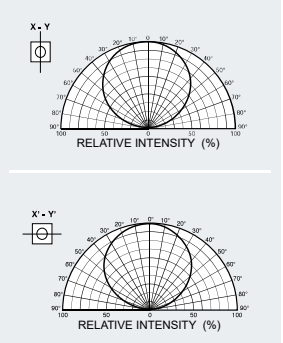

© 2012 ROHM Co., Ltd. All rights reserved.

QUASAR SCIENCE LLC EXHIBIT 1062, Page 1 of 4
QUASAR SCIENCE LLC v. COLT INTERNATIONAL CLOTHING, INC.
IPR2023-00614

Electrical Characteristics Curves

Forward Current-Forward Voltage

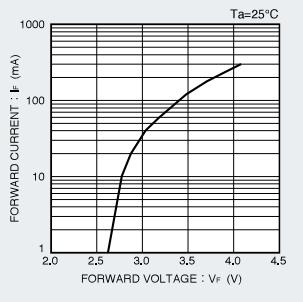

■ PSL0101WBEA, PSL0101WBEB, PSL0101WBEC, PSL0101WBED, PSL0101WBFA, PSL0101WBFB, PSL0101WBFC, PSL0101WBFD
◪ PSL0102WBEA, PSL0102WBEB, PSL0102WBEC, PSL0102WBED

Luminous Intensity-Atmosphere Temperature

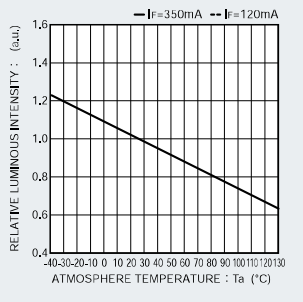

■ PSL0101WBEA, PSL0101WBEB, PSL0101WBEC, PSL0101WBED, PSL0101WBFA, PSL0101WBFB, PSL0101WBFC, PSL0101WBFD
◪ PSL0102WBEA, PSL0102WBEB, PSL0102WBEC, PSL0102WBED

Derating

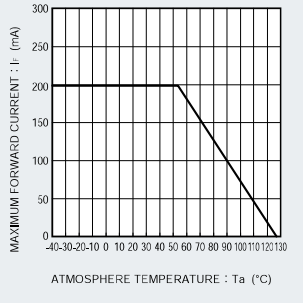

■ PSL0101WBEA, PSL0101WBEB, PSL0101WBEC, PSL0101WBED, PSL0101WBFA, PSL0101WBFB, PSL0101WBFC, PSL0101WBFD
◪ PSL0102WBEA, PSL0102WBEB, PSL0102WBEC, PSL0102WBED

Luminous Flux-Forward Current (PSL0102 series)

【5000K】

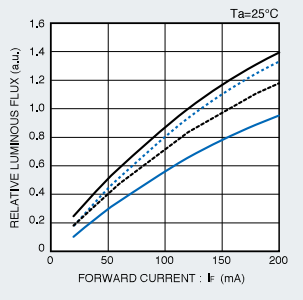

■ PSL0102WBEA
◪ PSL0102WBEB
■ PSL0102WBEC
◪ PSL0102WBED

【3000K】

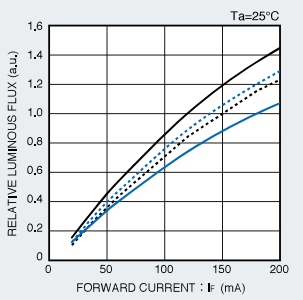

■ PSL0102WBFA
◪ PSL0102WBFB
■ PSL0102WBFC
◪ PSL0102WBFD

© 2012 ROHM Co., Ltd. All rights reserved.

QUASAR SCIENCE LLC EXHIBIT 1062, Page 2 of 4
QUASAR SCIENCE LLC v. COLT INTERNATIONAL CLOTHING, INC.
IPR2023-00614

Rank Reference of Brightness

White (WB)

Package structure	Package size	Height (mm)	Luminous flux (lm) / I(mA)	91	92	A1	A2	B1	B2	C1	C2	D1	D2	E1	E2
				0 to 10	10 to 20	20 to 30	30 to 40	40 to 50	50 to 60	60 to 70	70 to 80	80 to 90	90 to 100	100 to 110	110~120
SSML	5050	1.0	120				PSL0102WBEA								
						PSL0102WBEB									
						PSL0102WBEC									
								PSL0102WBED							
						PSL0102WBFA									
						PSL0102WBFB									
					PSL0102WBFC										
						PSL0102WBFD									

Part No. Construction

Chromaticity sort ※2 — Rank sign (Brightness Rank) ※1

P	S	L	0	1	0	2	W	B	E	A	1	A1	2

Series name — Package type — Emitting type — Emitting Color — Ra — Taping specifications — Rank sign (Chromaticity Rank) ※1

PSL	High power LED series

WB	White

A	(Ra=65)
B	(Ra=80)
C	(Ra=90)
D	(Ra=74)

※1 Concerning the Brightness rank
- Please refer to the rank chart above for luminous intensity classification.
- Please refer to the Specification sheet for color classification.
- Part name is individual for each rank.
- When shipped as sample, the part name will be a representative part name.
  General products are free of ranks. Please contact sales if rank appointment is needed.

※2 Please refer to chromaticitydiagram.

※Please refer to the Specification sheet about Taping specification.

Packing Specification

ROHM LED products are being shipped with desiccant (silica gel) concluded in moisture-proof bags.
Pasting the moisture sensitive label on the outer surface of the moisture-proof bags or enclosing the humidity indication card inside the bag is available upon request.
Please contact the nearest sales office or distributer if necessary.

© 2012 ROHM Co., Ltd. All rights reserved.

QUASAR SCIENCE LLC EXHIBIT 1062, Page 3 of 4
QUASAR SCIENCE LLC v. COLT INTERNATIONAL CLOTHING, INC.
IPR2023-00614

Notes

No copying or reproduction of this document, in part or in whole, is permitted without the consent of ROHM Co.,Ltd.

The content specified herein is subject to change for improvement without notice.

The content specified herein is for the purpose of introducing ROHM's products (hereinafter "Products"). If you wish to use any such Product, please be sure to refer to the specifications, which can be obtained from ROHM upon request.

Examples of application circuits, circuit constants and any other information contained herein illustrate the standard usage and operations of the Products. The peripheral conditions must be taken into account when designing circuits for mass production.

Great care was taken in ensuring the accuracy of the information specified in this document. However, should you incur any damage arising from any inaccuracy or misprint of such information, ROHM shall bear no responsibility for such damage.

The technical information specified herein is intended only to show the typical functions of and examples of application circuits for the Products. ROHM does not grant you, explicitly or implicitly, any license to use or exercise intellectual property or other rights held by ROHM and other parties. ROHM shall bear no responsibility whatsoever for any dispute arising from the use of such technical information.

The Products specified in this document are intended to be used with general-use electronic equipment or devices (such as audio visual equipment, office-automation equipment, communication devices, electronic appliances and amusement devices).

The Products specified in this document are not designed to be radiation tolerant.

While ROHM always makes efforts to enhance the quality and reliability of its Products, a Product may fail or malfunction for a variety of reasons.

Please be sure to implement in your equipment using the Products safety measures to guard against the possibility of physical injury, fire or any other damage caused in the event of the failure of any Product, such as derating, redundancy, fire control and fail-safe designs. ROHM shall bear no responsibility whatsoever for your use of any Product outside of the prescribed scope or not in accordance with the instruction manual.

The Products are not designed or manufactured to be used with any equipment, device or system which requires an extremely high level of reliability the failure or malfunction of which may result in a direct threat to human life or create a risk of human injury (such as a medical instrument, transportation equipment, aerospace machinery, nuclear-reactor controller, fuel-controller or other safety device). ROHM shall bear no responsibility in any way for use of any of the Products for the above special purposes. If a Product is intended to be used for any such special purpose, please contact a ROHM sales representative before purchasing.

If you intend to export or ship overseas any Product or technology specified herein that may be controlled under the Foreign Exchange and the Foreign Trade Law, you will be required to obtain a license or permit under the Law.

ROHM SEMICONDUCTOR

Thank you for your accessing to ROHM product informations.
More detail product informations and catalogs are available, please contact us.

ROHM Customer Support System

http://www.rohm.com/contact/

© 2012 ROHM Co., Ltd. All rights reserved.