US008438416B2

(12) **United States Patent**
Kocev et al.

(10) **Patent No.: US 8,438,416 B2**
(45) **Date of Patent: May 7, 2013**

(54) **FUNCTION BASED DYNAMIC POWER CONTROL**

(75) Inventors: **Andrej Kocev**, York, ME (US); **Alexander Branover**, Chestnut Hill, MA (US)

(73) Assignee: **Advanced Micro Devices, Inc.**, Sunnyvale, CA (US)

(*) Notice: Subject to any disclaimer, the term of this patent is extended or adjusted under 35 U.S.C. 154(b) by 265 days.

(21) Appl. No.: **12/909,006**

(22) Filed: **Oct. 21, 2010**

(65) **Prior Publication Data**

US 2012/0102344 A1 Apr. 26, 2012

(51) **Int. Cl.**
G06F 1/32 (2006.01)
G06F 1/10 (2006.01)

(52) **U.S. Cl.**
USPC **713/601**; 713/322; 713/323; 713/324

(58) **Field of Classification Search** 713/300
See application file for complete search history.

(56) **References Cited**

U.S. PATENT DOCUMENTS

5,628,020 A * 5/1997 O'Brien 713/322
5,737,615 A * 4/1998 Tetrick 713/324
5,884,088 A * 3/1999 Kardach et al. 713/324
6,141,283 A * 10/2000 Bogin et al. 365/226
6,282,662 B1 * 8/2001 Zeller et al. 713/300
6,480,965 B1 * 11/2002 Harriman et al. 713/322
6,496,895 B1 * 12/2002 Harriman et al. 710/306
6,760,852 B1 * 7/2004 Gulick 713/324
7,028,200 B2 * 4/2006 Ma 713/324
7,051,218 B1 * 5/2006 Gulick et al. 713/310
7,146,510 B1 * 12/2006 Helms et al. 713/300
7,162,404 B2 * 1/2007 Hunt et al. 703/16
7,174,467 B1 * 2/2007 Helms et al. 713/300
7,231,534 B2 * 6/2007 Ma 713/323
7,299,370 B2 * 11/2007 George et al. 713/322
7,444,526 B2 * 10/2008 Felter et al. 713/300
7,523,324 B2 * 4/2009 Ma 713/300
7,624,286 B2 * 11/2009 Lin et al. 713/300
7,644,293 B2 * 1/2010 Sistla et al. 713/323
7,750,912 B2 * 7/2010 Polzin et al. 345/501
7,788,516 B2 * 8/2010 Conroy et al. 713/340
7,882,998 B2 2/2011 Roos
8,140,868 B2 * 3/2012 Felter et al. 713/300
8,190,939 B2 * 5/2012 Fields et al. 713/324
8,209,559 B2 * 6/2012 Memon et al. 713/320
2003/0229821 A1 * 12/2003 Ma 714/8
2006/0053326 A1 * 3/2006 Naveh et al. 713/323
2006/0174142 A1 * 8/2006 Lin et al. 713/300

(Continued)

Primary Examiner — Ryan Stiglic
(74) *Attorney, Agent, or Firm* — Meyertons, Hood, Kivlin, Kowert & Goetzel, P.C.; Erik A. Heter

(57) **ABSTRACT**

A system and method for dynamic function based power control is disclosed. In one embodiment, a system includes a bridge unit having a memory controller and a communication hub coupled to the memory controller. The system further includes a power management unit, wherein the power management unit is configured to clock-gate the communication hub responsive to determining that each of a plurality of processor cores are in an idle state and that an I/O interface unit has been idle for an amount of time exceeding a first threshold. The power management unit is further configured to clock-gate the memory controller responsive to clock-gating the communication hub and determining that a memory coupled to the memory controller is in a first low power state. The power management unit may also perform power-gating of functional units subsequent to clock-gating the same.

31 Claims, 10 Drawing Sheets

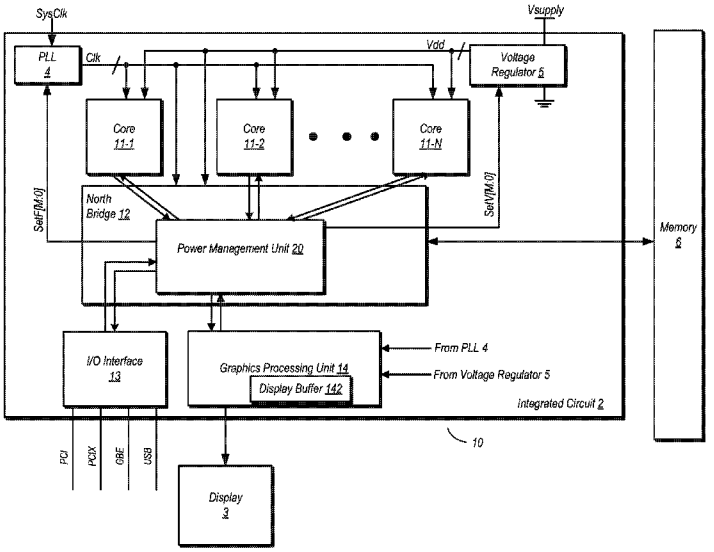

U.S. PATENT DOCUMENTS

2007/0115290	A1*	5/2007	Polzin et al.	345/501
2008/0005596	A1*	1/2008	Sistla et al.	713/300
2008/0301475	A1*	12/2008	Felter et al.	713/300
2009/0259862	A1*	10/2009	Bulusu et al.	713/322
2010/0162014	A1*	6/2010	Memon et al.	713/320
2010/0287394	A1*	11/2010	Branover et al.	713/323
2011/0022857	A1*	1/2011	Nussbaum et al.	713/300
2011/0112798	A1*	5/2011	Branover et al.	702/186
2011/0113202	A1*	5/2011	Branover et al.	711/135
2011/0148887	A1*	6/2011	Chong et al.	345/501
2011/0264934	A1*	10/2011	Branover et al.	713/320
2011/0296222	A1*	12/2011	Tan et al.	713/324

* cited by examiner

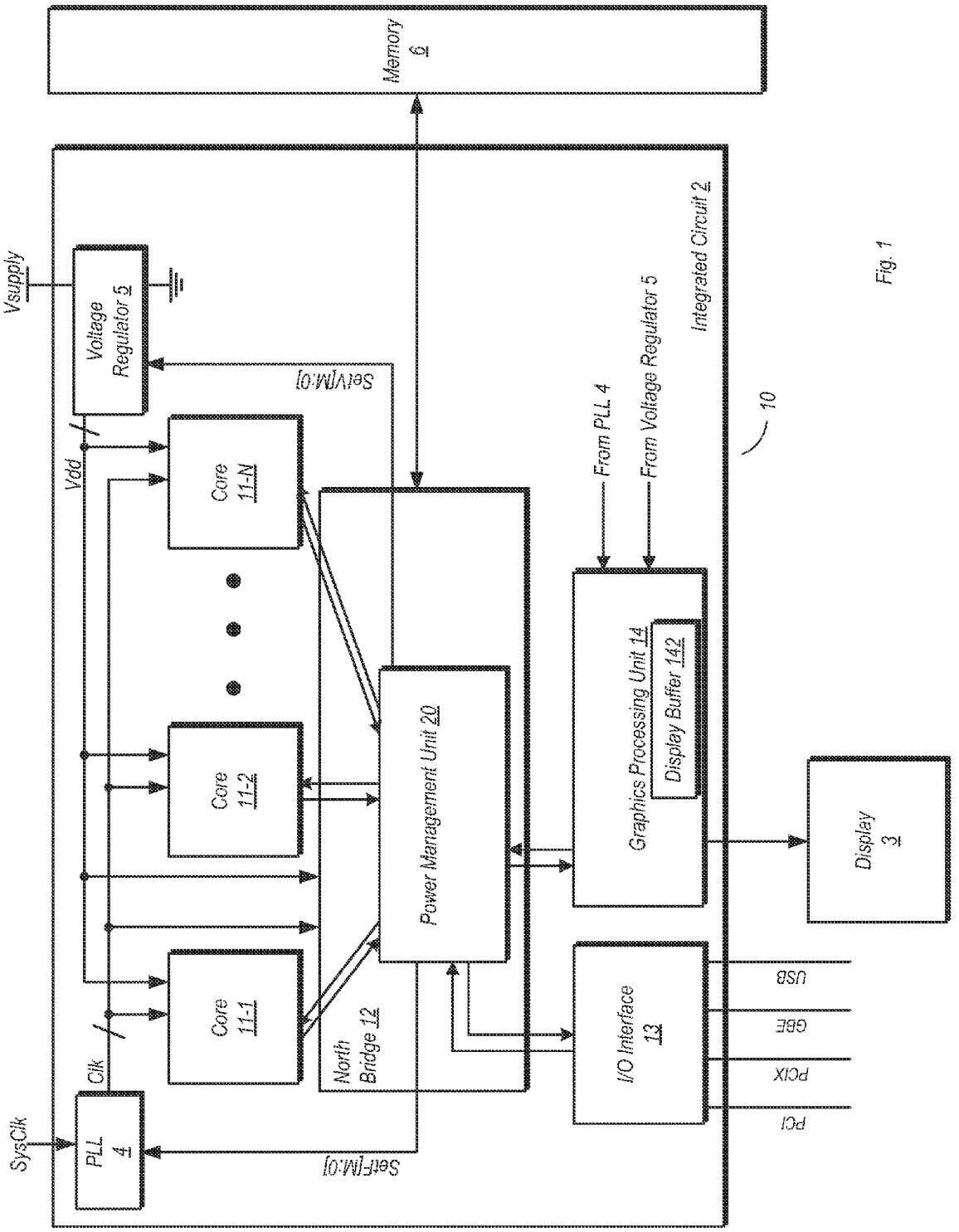
Memory 6
Vsupply
Voltage Regulator 5
selV[M:0]
Vdd
Core 11-N
Core 11-2
Core 11-1
Clk
SysClk
PLL 4
selF[M:0]
North Bridge 12
Power Management Unit 20
From PLL 4
From Voltage Regulator 5
Integrated Circuit 2
10
Graphics Processing Unit 14
Display Buffer 142
Display 3
I/O Interface 13
USB
GBE
PCIX
PCI

Fig. 1

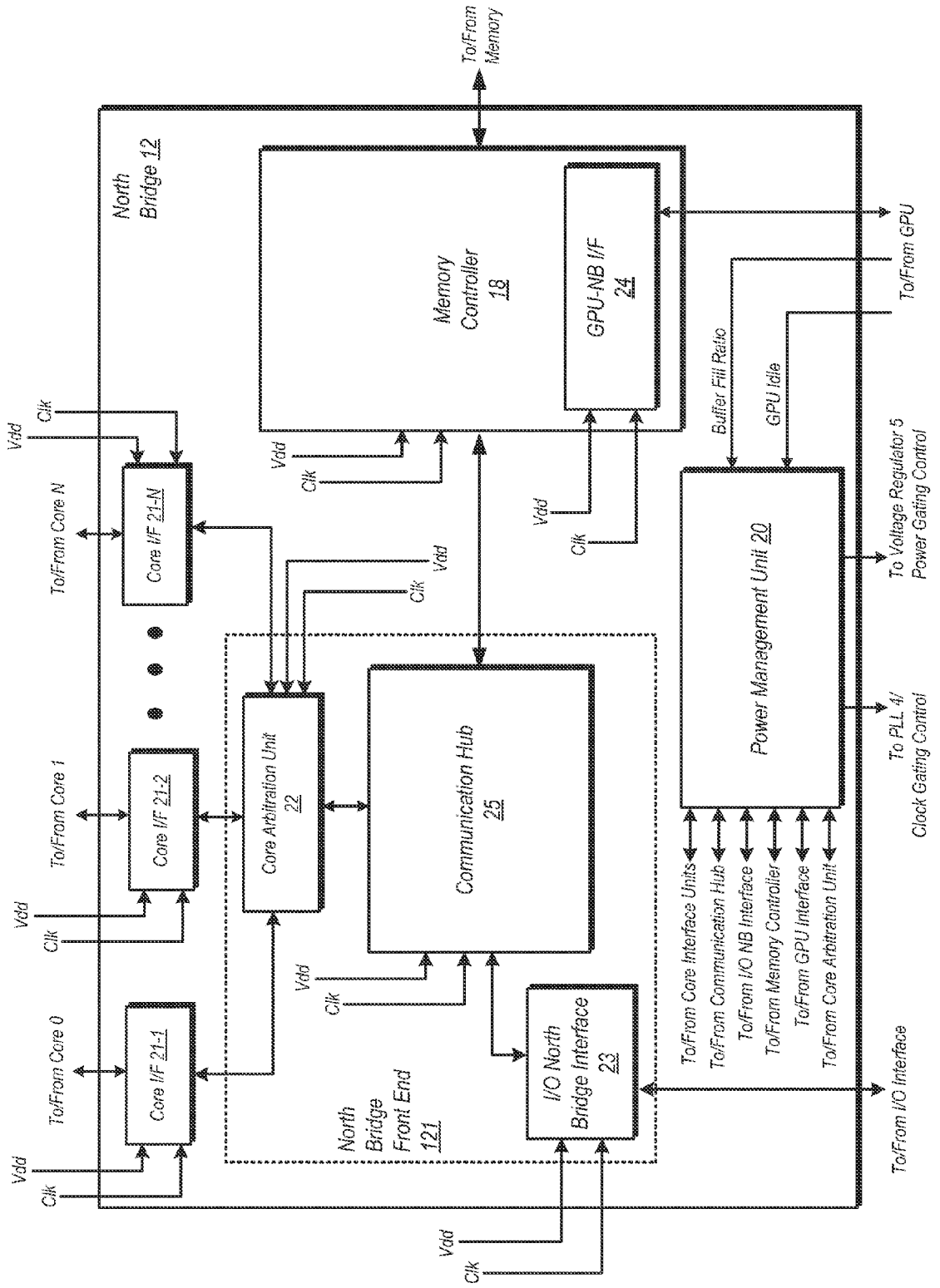
To/From Memory
North Bridge 12
Memory Controller 18
GPU-NB I/F 24
To/From GPU
Buffer Fill Ratio
GPU Idle
Power Management Unit 20
To Voltage Regulator 5 Power Gating Control
To PLL 4/ Clock Gating Control
To/From I/O Interface
To/From Core Interface Units
To/From Communication Hub
To/From I/O NB Interface
To/From Memory Controller
To/From GPU Interface
To/From Core Arbitration Unit
Communication Hub 25
Core Arbitration Unit 22
I/O North Bridge Interface 23
North Bridge Front End 121
Core I/F 21-1
Core I/F 21-2
Core I/F 21-N
To/From Core 0
To/From Core 1
To/From Core N
Vdd
Clk

Fig. 2

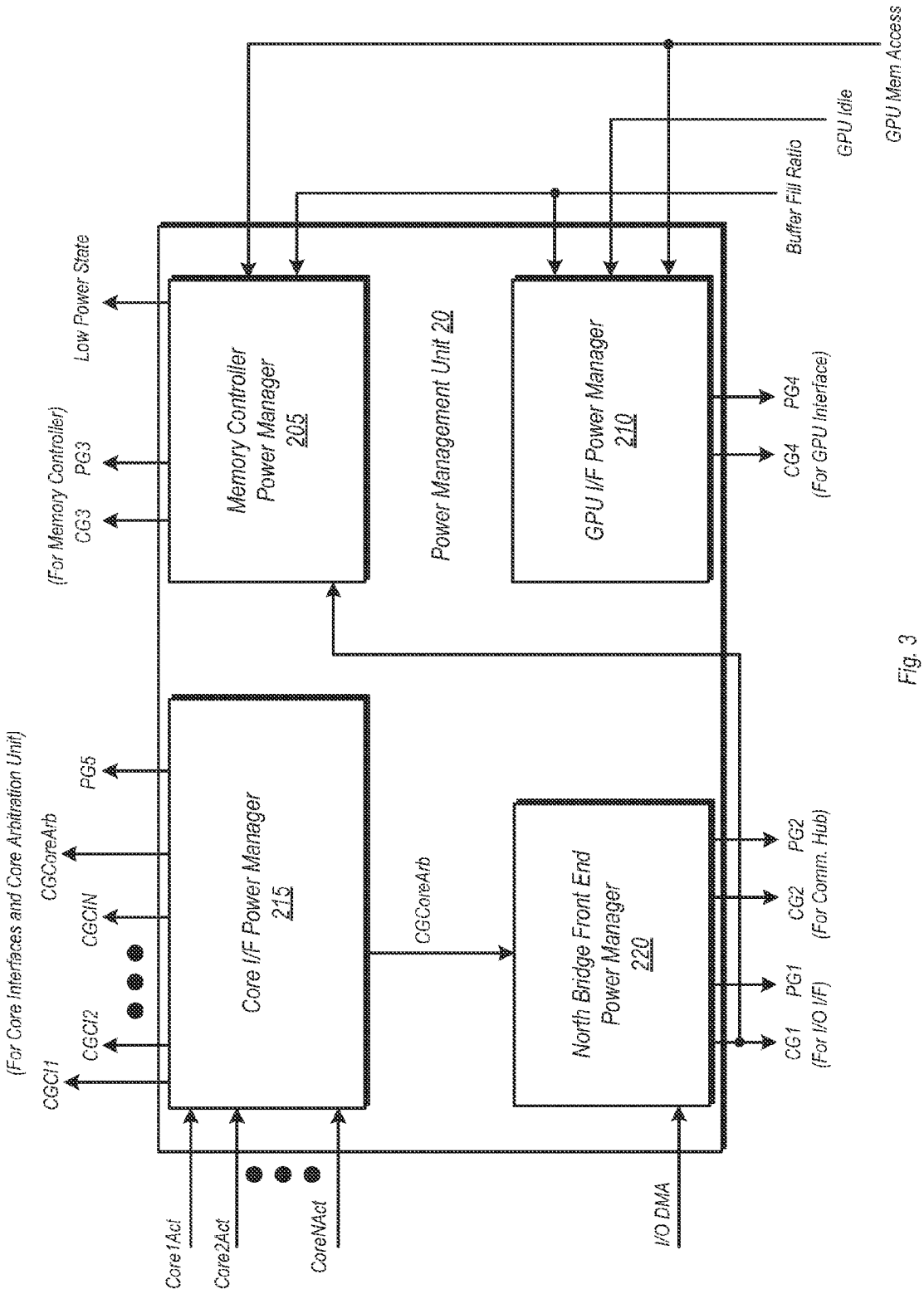
Memory Controller Power Manager 205
Power Management Unit 20
GPU I/F Power Manager 210
Core I/F Power Manager 215
North Bridge Front End Power Manager 220
CGCoreArb
Low Power State
(For Memory Controller)
CG3 PG3
(For Core Interfaces and Core Arbitration Unit)
CGCI1
CGCI2
CGCIN
CGCoreArb
PG5
Core1Act
Core2Act
CoreNAct
I/O DMA
CG1 PG1
(For I/O I/F)
CG2 PG2
(For Comm. Hub)
CG4 PG4
(For GPU Interface)
Buffer Fill Ratio
GPU Idle
GPU Mem Access

Fig. 3

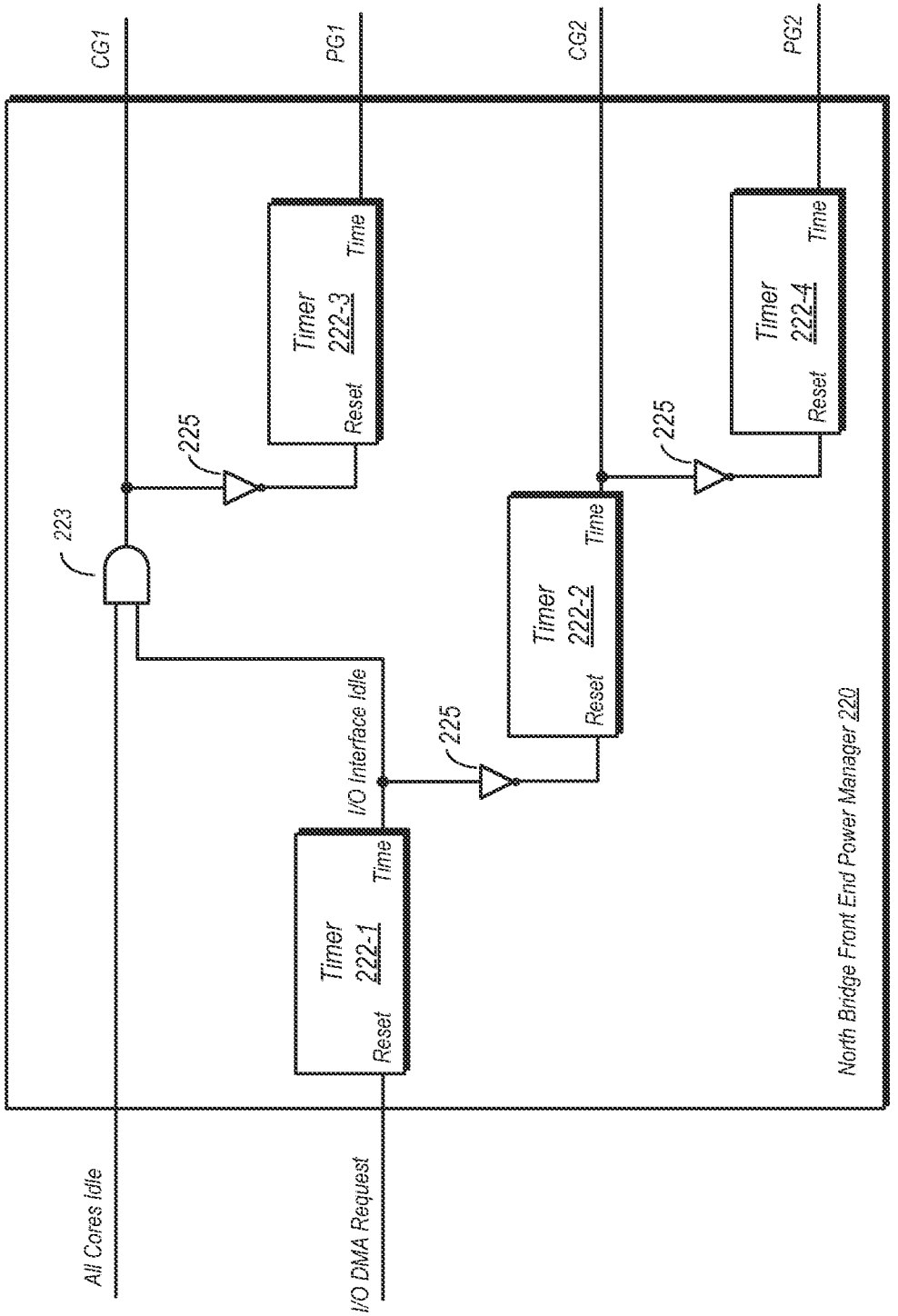
CG1
PG1
CG2
PG2
223
225
225
225
Timer 222-1
Reset
Time
Timer 222-2
Reset
Time
Timer 222-3
Reset
Time
Timer 222-4
Reset
Time
I/O Interface Idle
North Bridge Front End Power Manager 220
All Cores Idle
I/O DMA Request

Fig. 4

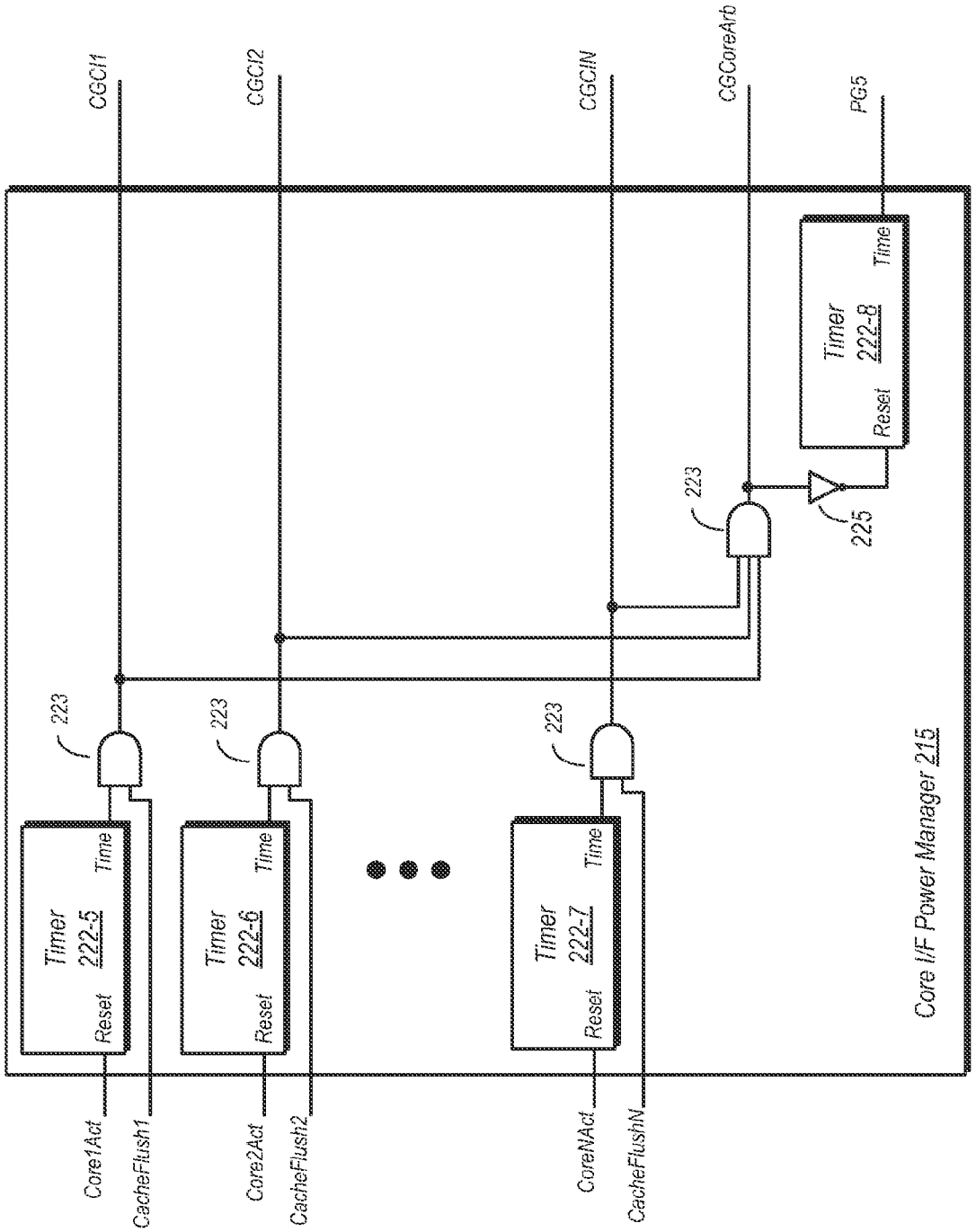
CGCI1
CGCI2
CGCIN
CGCoreArb
PG5
Timer 222-5
Time
Reset
Timer 222-6
Time
Reset
Timer 222-7
Time
Reset
Timer 222-8
Time
Reset
223
223
223
223
225
Core1Act
CacheFlush1
Core2Act
CacheFlush2
CoreNAct
CacheFlushN
Core I/F Power Manager 215

Fig. 5

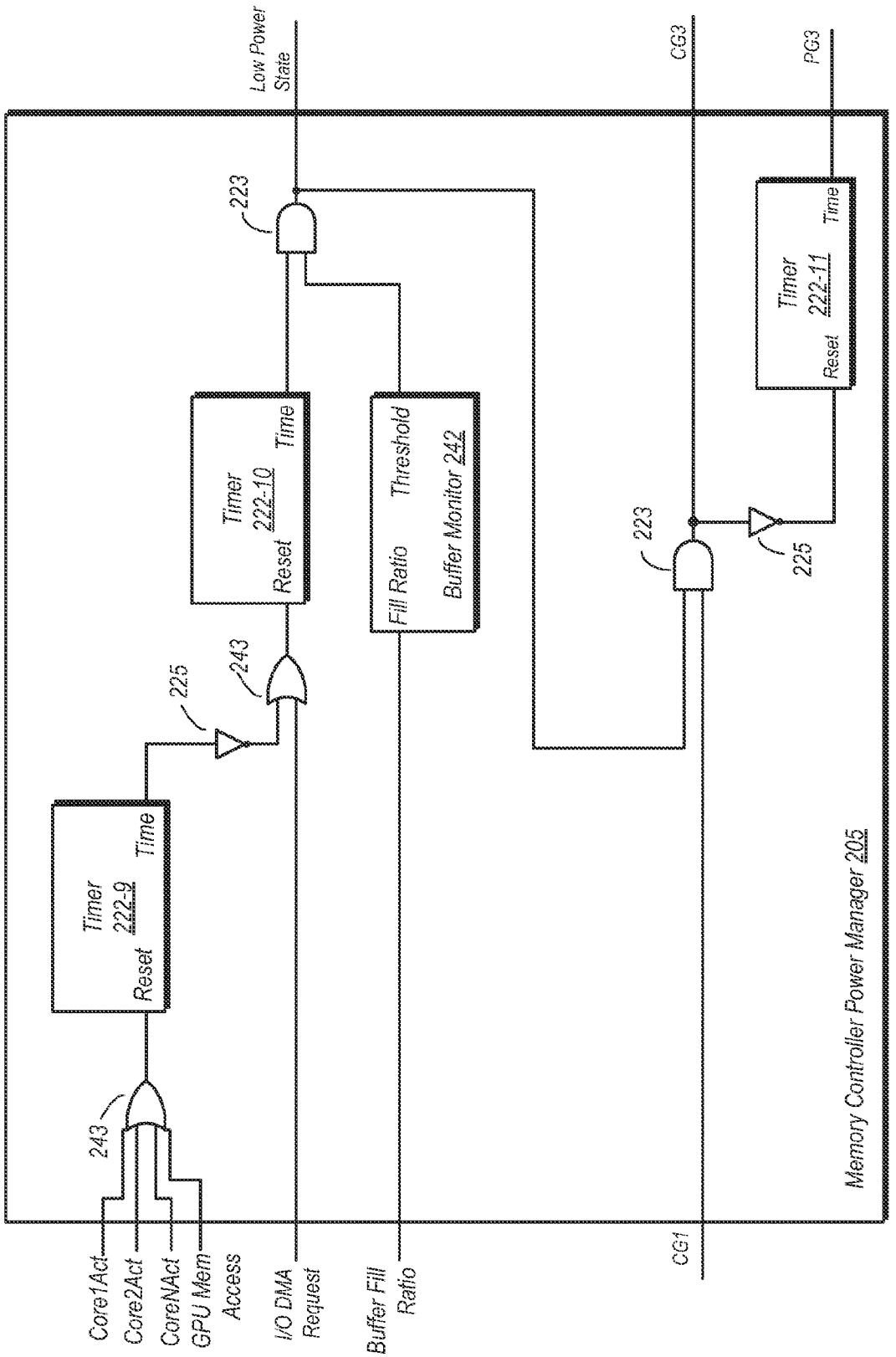
Low Power State
CG3
PG3
223
Timer 222-11
Time
Reset
Timer 222-10
Time
Reset
Threshold
Fill Ratio
Buffer Monitor 242
223
225
243
225
Timer 222-9
Time
Reset
243
Memory Controller Power Manager 205
Core1Act
Core2Act
CoreNAct
GPU Mem Access
I/O DMA Request
Buffer Fill Ratio
CG1

Fig. 6

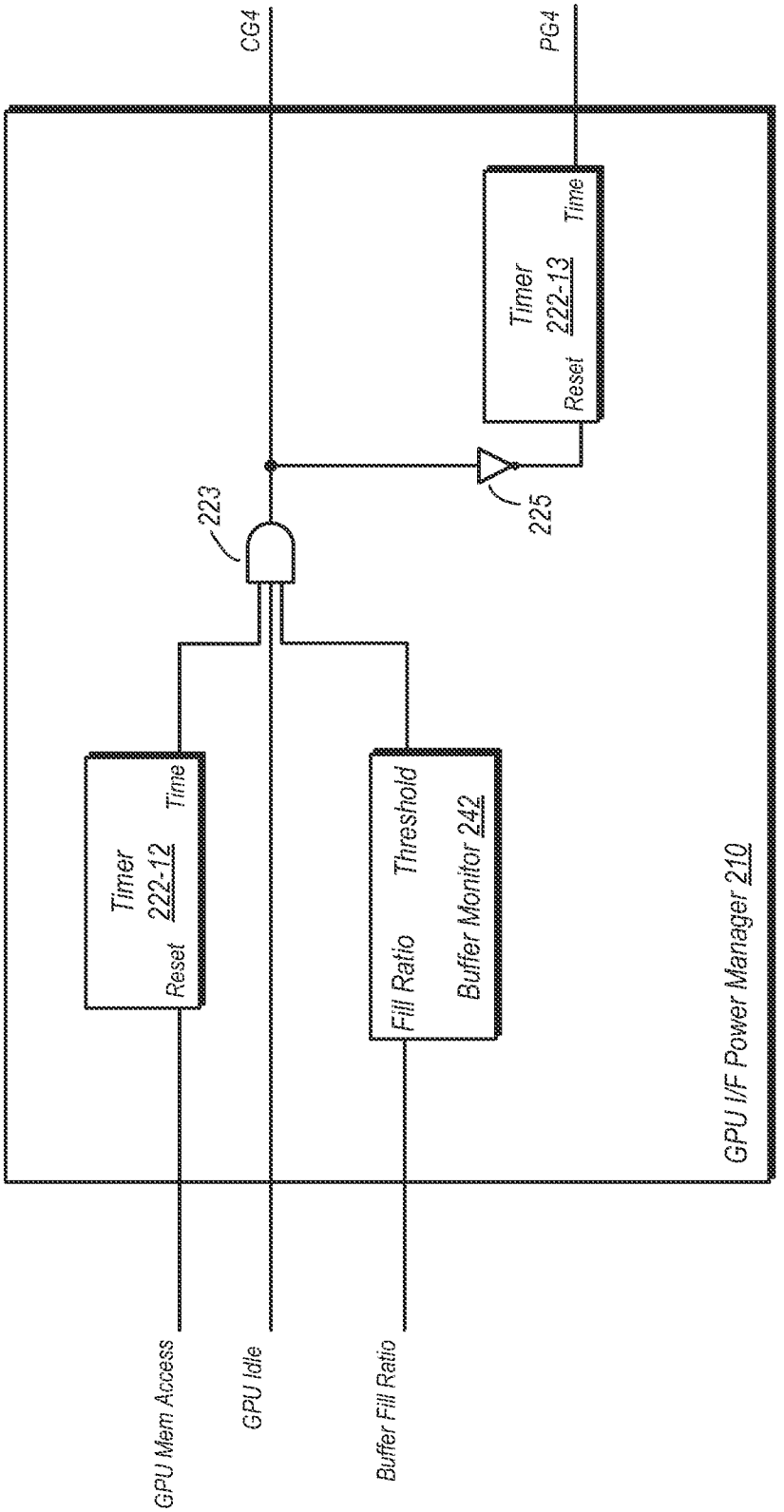
GPU Mem Access
GPU Idle
Buffer Fill Ratio
Timer
222-12
Reset
Time
223
Fill Ratio
Threshold
Buffer Monitor 242
CG4
225
Timer
222-13
Reset
Time
PG4
GPU I/F Power Manager 210

Fig. 7

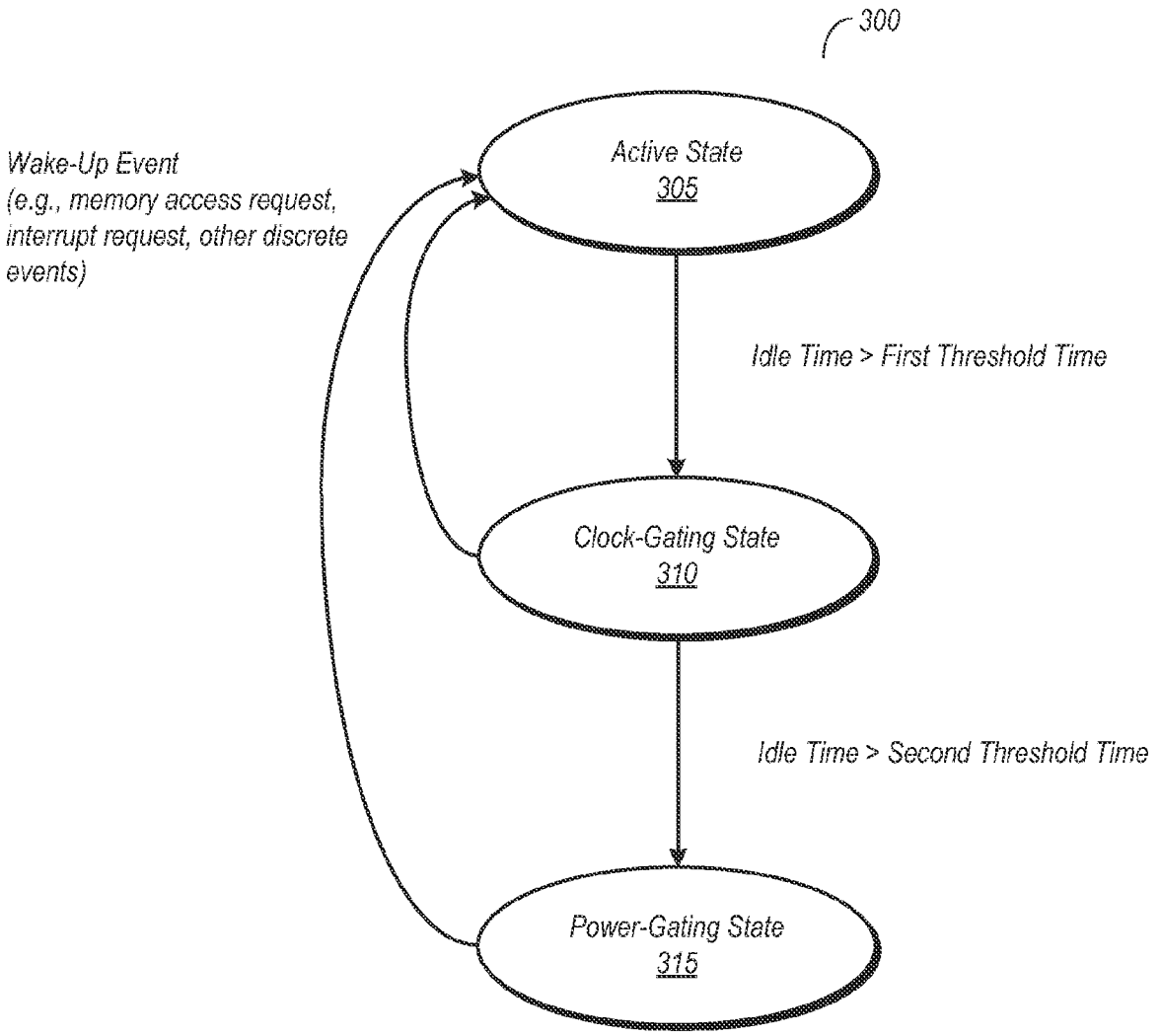
300
Wake-Up Event
(e.g., memory access request, interrupt request, other discrete events)
Active State
305
Idle Time > First Threshold Time
Clock-Gating State
310
Idle Time > Second Threshold Time
Power-Gating State
315

Fig. 8

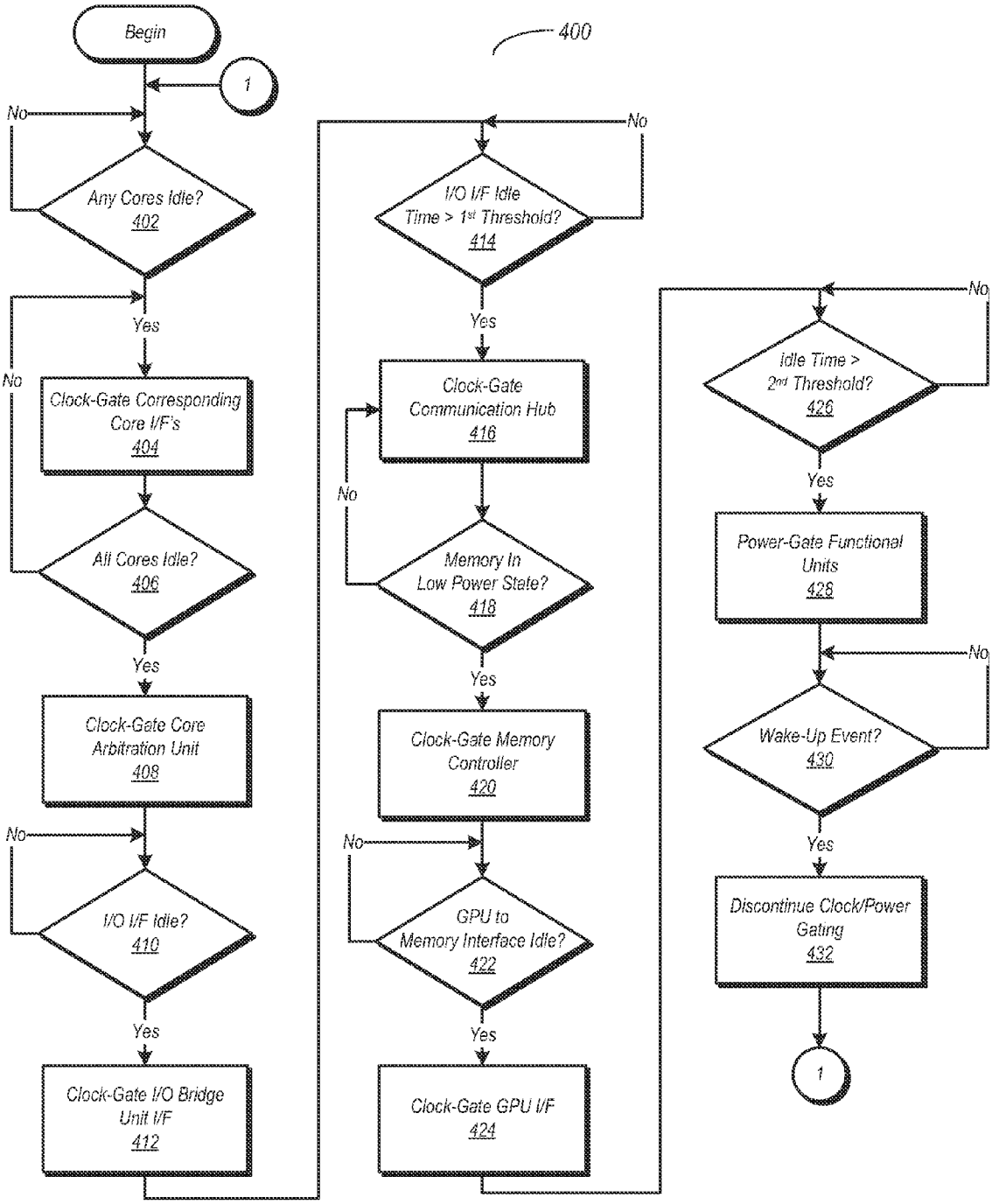
400
Begin
1
No
Any Cores Idle?
402
Yes
No
Clock-Gate Corresponding Core I/F's
404
All Cores Idle?
406
Yes
Clock-Gate Core Arbitration Unit
408
No
I/O I/F Idle?
410
Yes
Clock-Gate I/O Bridge Unit I/F
412
No
I/O I/F Idle Time > 1st Threshold?
414
Yes
Clock-Gate Communication Hub
416
No
Memory In Low Power State?
418
Yes
Clock-Gate Memory Controller
420
No
GPU to Memory Interface Idle?
422
Yes
Clock-Gate GPU I/F
424
No
Idle Time > 2nd Threshold?
426
Yes
Power-Gate Functional Units
428
No
Wake-Up Event?
430
Yes
Discontinue Clock/Power Gating
432
1

Fig. 9

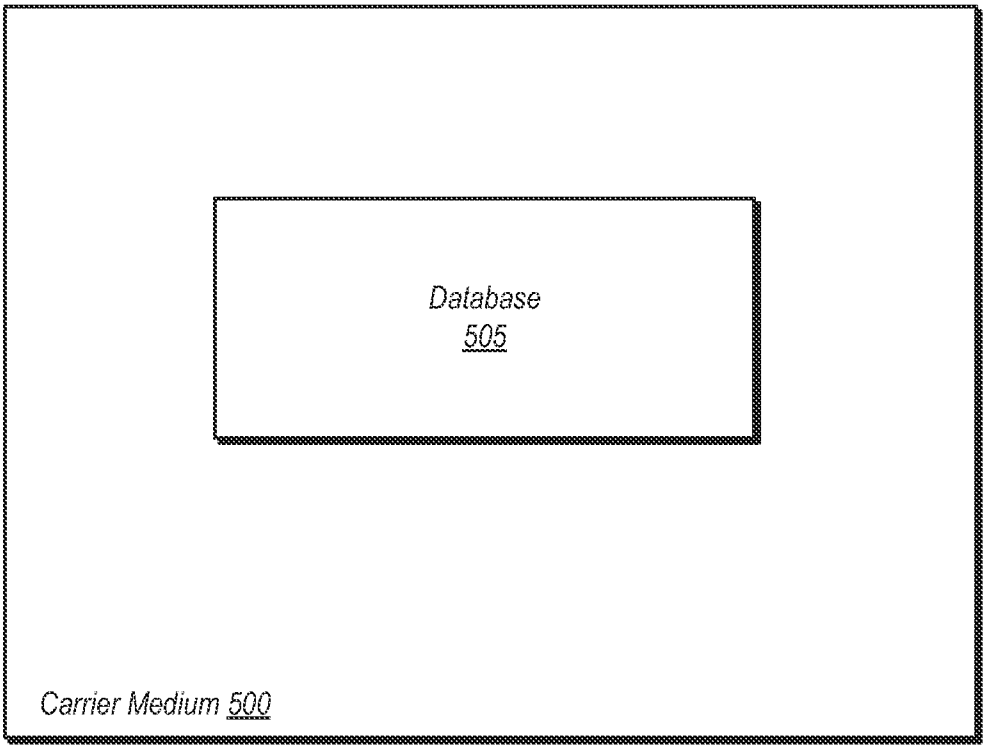

Fig. 10

FUNCTION BASED DYNAMIC POWER CONTROL

BACKGROUND

1. Field of the Invention

This invention relates to integrated circuits (IC's), and more particularly, to controlling the power consumption of IC's.

2. Description of the Related Art

During the design of a computer or other processor-based system, many design factors must be considered. A successful design may require several tradeoffs between power consumption, performance, thermal output, and so forth. For example, the design of a computer system with an emphasis on high performance may allow for greater power consumption and thermal output. Conversely, the design of a portable computer system that is sometimes powered by a battery may emphasize reducing power consumption at the expense of some performance. These same factors may be considered when designing the individual IC's to be used in the computer system.

Two commonly used methods of controlling power consumption are clock-gating and power-gating. When using clock-gating, a clock signal provided to units of an IC may be inhibited or otherwise blocked from reaching those units when utilizing a power saving mode. When power-gating is used, power may be removed from the units of the IC for operations in a power saving mode. Both clock and power-gating are used in some systems. For example, clock-gating may be used to put the units of an IC into an idle state that can quickly be exited by restoring the clock signal. Power-gating may be applied subsequent to clock-gating to place units into a sleep state in which no power or clock is received. Clock and power-gating may be applied to an IC, or multiple IC's, on a coarse or fine-grained basis. On a coarse-grained basis, power and clock-gating are performed for the multiple units of an IC concurrently. On a fine-grained basis, power and clock-gating may be applied to individual state elements and other circuits.

SUMMARY OF THE EMBODIMENTS OF THE DISCLOSURE

A system and method for dynamic function based power control is disclosed. In one embodiment, a system includes a bridge unit having a memory controller and a communication hub coupled to the memory controller. The system further includes a power management unit, wherein the power management unit is configured to clock-gate the communication hub responsive to determining that each of a plurality of processor cores are in an idle state and that an I/O interface unit has been idle for an amount of time exceeding a first threshold. The power management unit is further configured to clock-gate the memory controller responsive to clock-gating the communication hub and determining that a memory coupled to the memory controller is in a first low power state. The power management unit may also perform power-gating of functional units subsequent to clock-gating the same.

In one embodiment, a method includes clock-gating a communication hub of a bridge unit responsive to determining that each of a plurality of processor cores are in an idle state and that an I/O interface unit has been idle for an amount of time exceeding a first threshold. The method further includes clock-gating a memory controller of the bridge unit responsive to clock-gating the communication hub and determining that a memory coupled to the memory controller is in a first low power state.

BRIEF DESCRIPTION OF THE DRAWINGS

Other aspects of the invention will become apparent upon reading the following detailed description and upon reference to the accompanying drawings in which:

FIG. **1** is a block diagram of one embodiment of an integrated circuit (IC) system on a chip (SOC);

FIG. **2** is a block diagram of one embodiment of a north bridge;

FIG. **3** is a block diagram of one embodiment of a power management unit;

FIG. **4** is a diagram illustrating one embodiment of a north bridge front end power management unit;

FIG. **5** is a diagram illustrating one embodiment of a core interface power manager;

FIG. **6** is a diagram illustrating one embodiment of a memory controller power manager;

FIG. **7** is a diagram illustrating one embodiment of a GPU interface power manager;

FIG. **8** is a state diagram illustrating one embodiment of operation for clock and power-gating of system components;

FIG. **9** is a flow diagram illustrating one embodiment of a method for clock and power-gating of system components; and

FIG. **10** is a block diagram of one embodiment of a carrier medium.

While the invention is susceptible to various modifications and alternative forms, specific embodiments thereof are shown by way of example in the drawings and will herein be described in detail. It should be understood, however, that the drawings and description thereto are not intended to limit the invention to the particular form disclosed, but, on the contrary, the invention is to cover all modifications, equivalents, and alternatives falling within the spirit and scope of the present invention as defined by the appended claims.

DETAILED DESCRIPTION

Overview:

The present disclosure is directed to a method and apparatus for function-based dynamic power control of a bridge unit, such as a north bridge unit in a computer system. In one embodiment, a bridge unit such as a north bridge may include a power management unit configured to perform clock-gating of various functional units thereof when those units are idle. The power management unit may be further configured to perform power-gating of the various functional units if they are clock-gated for an extended time. The initial clock-gating of a particular functional may depend on an idle time exceeding at least a first time threshold and/or other conditions.

The functional units of the bridge unit may include various interfaces to other system components. Among these interfaces may be one or more processor core interfaces, an interface to an I/O bridge (e.g., a south bridge), a memory controller, and a graphics processing unit. The power management unit may monitor the activity of these various interfaces, and may perform clock/power-gating if these interfaces are idle for a time exceeding a threshold value. The time thresholds for determining whether to perform clock-gating and/or power-gating may in some cases be on the order of tens of nanoseconds or even as low as tens of nanoseconds. Similarly, latency associated with an exit of clock-gating and/or power gating may be on the order of tens of nanosec-

onds to tens of microseconds. Accordingly, controlling power consumption of the bridge unit may be performed in a highly dynamic and efficient manner, and may optimize power consumption by the bridge unit.

As used herein, the term clock-gating may be defined as inhibiting a corresponding clock signal from being provided to a unit configured to receive it, or alternatively, setting the clock frequency to zero for that unit. Discontinuing clock-gating may be defined as restoring the corresponding clock signal having a non-zero frequency to a unit for which clock-gating was previously performed. The term power-gating as used herein may be defined as removing power from a functional unit by disconnecting it from a corresponding operating (or supply) voltage, while discontinuing power-gating may be defined as re-connecting the corresponding operating voltage to that unit.

The various embodiments of a bridge unit discussed below, as well as embodiments of a computer system discussed below are exemplary, and not intended to be limiting. Other embodiments are possible and contemplated. Such embodiments may fall within the scope of this disclosure and may be configured to perform the various functions described below.

Processor With Power Management Unit:

FIG. **1** is a block diagram of one embodiment of an integrated circuit (IC) coupled to a memory. IC**2** and memory **6**, along with display **3**, form at least a portion of computer system **10** in this example. In the embodiment shown, IC **2** is a system on a chip (SOC) type processor having a number of processor cores **11** (e.g., **11-1**, **11-2**, and so forth). It is noted that the methodology to be described herein may be applied to other arrangements, such as multi-processor computer systems implementing multiple processors (which may be single-core or multi-core processors) on separate, unique IC dies. In multi-core embodiments, processor cores **11** may be identical to each other (i.e. homogonous multi-core), or one or more processor cores **11** may be different from others (i.e. heterogeneous multi-core).

Processor cores **11** may each include one or more execution units, cache memories, schedulers, branch prediction circuits, and so forth. Furthermore, each of processor cores **11** may be configured to assert requests for access to memory **6**, which may function as the main memory for computer system **10**. Such requests may include read requests and/or write requests, and may be initially received from a respective processor core **11** by north bridge **12**. Requests for access to memory **6** may be routed through a memory controller **18**, as shown in FIG. **2**. Memory **6** may be implemented using one of many different various types of memory technologies. For example, memory **6** may be implemented using dynamic random access memory (DRAM) in one embodiment.

Each processor core **11** is coupled to north bridge **12** in the embodiment shown. North bridge **12** may provide a wide variety of interface functions for each of processor cores **11**, including interfaces to memory and to various peripherals. In addition to being coupled to each of processor cores **11**, north bridge **12** is also coupled to input/output (I/O) interface **13**, graphics processing unit (GPU) **14**, memory controller **18**, phase-locked loop (PLL) **4**, and voltage regulator **5**. Additional functional units may also be included in some embodiments. North bridge **12** may serve as a communications hub for activity in computer system **10**, routing and coordinating communications between processor cores **11**, memory **6** (via memory controller **18**), display **3** (via GPU **14**), and various peripheral devices (via I/O interface **13**). Additional details of north bridge **12** will be discussed below in reference to FIG. **2**.

I/O interface **13** may function as a south bridge device in computer system **10**. A number of different types of peripheral buses may be coupled to I/O interface **13**. In this particular example, the bus types include a peripheral component interconnect (PCI) bus, a PCI-Extended (PCI-X), a PCIE (PCI Express) bus, a gigabit Ethernet (GBE) bus, and a universal serial bus (USB). However, these bus types are exemplary, and many other bus types may also be coupled to I/O interface **13**. Peripheral devices may be coupled to some or all of the peripheral buses. Such peripheral devices include (but are not limited to) keyboards, mice, printers, scanners, joysticks or other types of game controllers, media recording devices, external storage devices, network interface cards, and so forth. At least some of the peripheral devices that may be coupled to I/O unit **13** via a corresponding peripheral bus may assert memory access requests using direct memory access (DMA). These requests (which may include read and write requests) may be conveyed to north bridge **12** via I/O interface **13**, and may be routed to memory controller **18**.

GPU **14** may perform video processing functions for computer system **10**. Video processing functions performed by GPU **14** may include basic video rendering, as well as 3-D graphics and other types of complex graphics functions. The video information processed by GPU **14** may be output for display on display **3**, which may be one of a number of different types of display units. Display **3** may be implemented as flat panel liquid crystal display (LCD), a light-emitting diode (LED) display, a plasma display, a cathode ray tube (CRT) display, or any other suitable type.

In the embodiment shown, GPU **14** may include a display buffer **142** that may store data for display processing. The data for display processing may be read (or filled) from memory **6** in the unified memory architecture (UMA) embodiment shown, via memory controller **18** and north bridge **12**. Thus, data to be processed by GPU **14** and rendered on display **3** may be stored in either display buffer **142** or memory **6**. Accordingly, GPU **14** may be configured to send DMA requests to memory **6**. As will be discussed below, GPU **14** may communicate with a memory controller of north bridge **12** via a GPU interface (e.g., GPU interface **24** of FIG. **2**). The data processed by GPU **14** may be accessed from display buffer **142**, which may then render images to be displayed on display **3**. In some embodiments, GPU **14** may periodically fill display buffer **142**, discontinue memory accesses, and allow display buffer **142** to be drained to a specified level before being filled again. The cycle may be repeated as necessary.

It is noted that in some embodiments, GPU **14** may be implemented within a given one of the processor cores **11**, rather than separately as shown here. Similarly, related components, such a graphics interface unit and display buffer may be implemented within the given processor core **11**.

In the embodiment shown, north bridge **12** includes a power management unit **20** that is configured to manage the power consumption of the various components of IC **2** in order to optimize its performance per watt. Power management unit **20** may perform a variety of power control actions for processor cores **11**, GPU **14**, I/O interface **13**, and so on. These power control actions may include changing a clock frequency received by a functional unit, changing an operating voltage received by a functional unit, clock-gating a functional unit, and power-gating a functional unit. Power management unit **20** may also be configured to perform power control actions for the various functional units of north bridge **12**.

In the embodiment shown, IC **2** includes a phase-locked loop (PLL) **4** coupled to receive a system clock signal. PLL **4**

may distribute corresponding clock signals to each of processor cores **11**, to GPU **14**, and to the respective functional units of north bridge **12**. In this embodiment, the clock signals received by each of processor cores **11**, GPU **14**, and the functional units of north bridge **12** are independent of one another. Power management unit **20** may generate a set of signals SetF[M:0] which indicate to PLL **4** (or to a clock control block or clock network control, not shown here) the frequency of the clock signal that is to be provided to those functional units of IC **2** that are configured to operate at a number of different clock frequencies (e.g., processor cores **11**). In addiction, the SetF[M:0] signals may also be used to indicate to PLL **4** whether or not a given functional unit is to be clock-gated. PLL **4** may respond to such signal by inhibiting the clock signal from being provided to the given functional unit. Clock-gating may be performed on particular functional units, including those of north bridge **12**, in executing power management schemes designed to optimize power consumption and performance per watt of the SOC implemented by IC **2**.

In the embodiment shown, IC **2** also includes voltage regulator **5**. Voltage regulator **5** may provide an operating voltage to each of processor cores **11**, to GPU **14**, I/O unit **13**, and the various functional units of north bridge **12**. For some units (e.g., processor cores **11**), the operating voltage may be varied by voltage regulator **5** in accordance with the signals SetV [M:0] generated by power management unit **20**. In addition, power management unit **20** may generate signals within SetV [M:0] indicating whether or not power-gating (i.e. to be turned off) for particular functional units, which may be performed in implementing the various power management schemes mentioned above.

It is noted that in some embodiments, PLL **4** and voltage regulator **5** may be implemented off-die, i.e. on IC's separate form IC **2**. However, in such cases, PLL **4** and voltage regulator **5** may still be controllable by power management unit **20** of north bridge **12** for performing various power control actions.

North Bridge Unit:

FIG. **2** is a block diagram of one embodiment of north bridge **12**. Other embodiments are possible and contemplated. In the embodiment shown, north bridge **12** may be functionally divided into a north bridge front end **121**, a memory controller **18**, a plurality of core interfaces **21**, and a power management unit **20**. North bridge **12** may serve as an interface for controlling communications between processor cores **11**, memory **6**, display **3**, I/O unit **13** and the various peripheral devices coupled thereto (which may be referred to as the I/O domain).

In the embodiment shown, north bridge front end **121** in this embodiment includes an I/O north bridge interface **23**, core arbitration unit **22**, and communications hub **25**. Core arbitration unit **22** in the embodiment shown is coupled to each of core interfaces **21**. Each of the core interfaces **21** may be coupled to a corresponding one of processor cores **11**, providing an interface between the core and north bridge **12**. Core arbitration unit **22** may arbitrate communications from among the processor cores using an arbitration scheme. Possible arbitration schemes include round robin arbitration, priority-based arbitration, or any other suitable arbitration scheme.

I/O north bridge interface **23** may provide an interface between a south bridge device (e.g., I/O interface **13**) and north bridge **12**. Through I/O north bridge interface **23**, DMA requests asserted by a peripheral device, as well as conveying data received responsive to DMA requests. Interrupt requests may also be conveyed to one of processing cores **11** via I/O north bridge interface **23**. In general, I/O north bridge interface may be utilized for all communications between north bridge **12** (and the various units coupled thereto) and the I/O domain, including I/O interface **13**.

North bridge front end **121** also includes communication hub **25**, which may serve as an intersection point for communications between the I/O domain, processor cores **11**, the memory, and GPU **14**. Communications hub **25** may also be an intersection point for communications between and among processor cores **11**. The various communications coordinated by communications hub **25** may be used to ensure cache coherency among processor cores **11** as well as with the corresponding data stored in memory **6**. Communications hub **25** may also coordinate communications between GPU **14** and processor cores **11**, as well as between GPU **14** and the I/O domain.

Memory controller **18** is configured to control accesses to memory **6** for both reads and writes. All data to be written to or read from memory **6** may pass through memory controller **18**. Read and write requests may be generated by various peripheral devices in the I/O domain, and may be relayed to memory controller **18** through I/O north bridge interface **23** and communications hub **25**. Read and write requests may also be asserted by any one of processor cores **11**, and may also be relayed through memory controller **18** via their respective interfaces **21** to north bridge **12**. GPU **14** may be configured to receive data from memory **6** responsive to read requests relayed into memory controller **18** via GPU north bridge interface **24**, which may provide an interface to the GPU.

Each of the functional units of north bridge **12** described above may be coupled to receive an operating voltage, Vdd, and a clock signal, Clk. When idle, each of these functional units may be clock-gated to reduce power consumption. Additional power savings may be realized by power-gating these functional units, which may occur if they have been clock-gated for an additional period of time. It is noted that at least some of the functional units of north bridge **12** may be clock-gated or power-gated independently of other ones of the functional units.

Power management unit **20** in the embodiment shown is coupled to each of the functional units described above. Information received from each of these functional units may be used to determine whether or not these units are idle and a length of time that they have been idle. Power management unit **20** may also receive information the graphics subsystem indicating whether GPU **14** is idle as well as information regarding the amount of data stored in a display buffer within GPU **14**. Using the information received from the various functional units, power management unit **20** may generate signals causing selected units to be clock-gated if they have been idle for a certain time and/or if other conditions have been met. Furthermore, if these functional units remain clock-gated for a sufficient amount of time (indicating that no wake-up event has occurred), the selected units may be power-gated. Clock-gating may and power-gating may enable power savings to be realized by reducing the amount of power consumed by inactive units. If a wake-up event occurs (e.g., a DMA request generated by a peripheral unit coupled to I/O interface **13**), power management unit **20** may restore power and the clock signal to these units, enabling them to resume functioning as normal. A more detailed description of one embodiment of a power management unit **20** now follows.

Power Management Unit and Components:

FIG. **3** is a block diagram of one embodiment of a power management unit. Numerous other embodiments are possible

and contemplated. In the embodiment of FIG. **3**, power management unit **20** may be divided into four separate units: memory controller power manager **205**, GPU interface (I/F) power manager **210**, core interface (I/F) power manager **215**, and north bridge front end (NBFE) power manager **220**. Power management unit **20** is configured to generate a number of clock-gating signals (e.g., CG**1**-CG**4**, CGCI**1**, etc.) that may cause corresponding functional units of north bridge **12** to be clock gated. These signals may be provided from power management unit **20** to PLL **4** (or another type of clock control or clock network control block) as part of the group of signals SetF[M:0]. Power management unit **20** may also be configured to generate a number of power-gating signals that may cause the corresponding functional units of north bridge **12** to be power-gated. The power-gating signals may be provided to voltage regulator **5** (or other type of power gating controller) as part of the group of signals SetV[M:0]. It is noted that the other clock-gating signals (CG**3**, CG**4**, etc.) and power-gating signals (PG**3**, PG**4**, etc.) may also be included in the signal groups SetF[M:0] and SetV[M:0], respectively.

NBFE power manager **220** in the embodiment shown is coupled to receive an I/O DMA signal which may be indicative of a DMA request generated from within the I/O domain NBFE power manager **220** may also receive another signal indicating when each and every one of processor cores **11** is idle. If NBFE power manager **220** does not receive an indication of an I/O DMA request for a time exceeding a first time threshold, and receives a signal indicating that all processor cores **11** are idle, it may cause I/O north bridge interface **23** to be clock-gated. Clock-gating of the I/O north bridge interface may be accomplished responsive to the assertion of the signal CG**1**.

NBFE power manager **220** may continue monitoring I/O north bridge interface **23** for an extra amount of time up to a second time threshold. If the amount of time since the most recent DMA request from the I/O domain exceeds the second time threshold, NBFE power manager **220** may assert the CG**2** signal to cause the clock-gating of communication hub **25**. It is noted however if a DMA request is received from the I/O domain at any time when one or both of I/O north bridge interface **23** and communications hub **25** are clock-gated, NBFE **220** may discontinue clock-gating these units (by de-asserting CG**2** and CG**1**, respectively) to allow them to return to an active state so that the requested access may be completed. It is further noted that embodiments are possible and contemplated wherein CG**2** is asserted to clock-gate communication hub **25** without delay once I/O north bridge interface **23** is clock-gated.

If I/O north bridge interface **23** continues to remain idle for a specified threshold time subsequent to clock-gating, NBFE power manager **220** may assert the PG**1** signal. This may cause I/O north bridge interface **23** to be power-gated. Similarly, if I/O communication hub **25** continues to remain clock-gated, it too may be power-gated responsive to NBFE power manager **220** asserting the PG**2** signal.

GPU I/F power manager **210** may assert the CG**4** signal responsive to the occurrence of three different conditions in this particular embodiment. A first of these conditions is an assertion of the GPU Idle signal, thereby indicating that GPU **14** is idle and no interaction with other components of north bridge **12** is expected. The GPU Idle signal may be asserted when display **3** is no longer updating and thus is not draining display buffer **142**. It is noted that the GPU Idle signal need not be asserted by GPU **14** itself (e.g., it may be asserted by a separate timer used to detect activity from GPU **14**). It is further noted that the GPU Idle signal may not be included in all embodiments, and thus only two conditions are necessary to assert CG**4** in such embodiments.

A second condition required to cause the assertion of the CG**4** signal in the embodiment occurs when the amount of data stored in display buffer **142** exceeds a certain threshold value. A third condition required for assertion of the CG**4** signal in this embodiment occurs when a specified period of time has elapsed since the most recent memory access by GPU **14**. Responsive to the occurrence of each of these conditions, GPU I/F power manager **215** in the embodiment shown may assert the CG**4** signal to cause the GPU interface **24** to be clock-gated. It is noted that embodiments are possible and contemplated wherein the occurrence of any one of these conditions may cause assertion of the CG**4** signal. If the GPU interface **24** remains clock-gated for a specified amount of time, GPU I/F power manager **210** may assert the PG**4** signal in order to cause the GPU interface **24** to be power-gated.

Core I/F power manager **215** may be coupled to receive various signals from each of processor cores **11** (designated here as Core**1**Act, Core**2**Act, etc.). It is noted that each Core**1**Act, Core**2**Act, etc., may each represent multiple signals, although for the sake of simplicity only a single signal path is shown here for each. These signals may indicate whether or not there is activity in the corresponding processor cores **11**. The received signals may indicate cache access attempts, cache misses, instructions issued, executed, or retired, memory access requests, and so on. In general, any suitable signal or signals that indicates activity of a processor core **11** may be provide to core I/F power manager **215**. For example, in an embodiment compliant with the Advanced Configuration and Power Interface (ACPI) specification, and indication that a given processor core **11** is in a non-C**0** state (where C**0** is the ACPI operating state) may result in a signal indicating core inactivity.

Using the signals that indicate inactivity, core I/F power manager **215** may monitor each processor core **11** for idleness. If a given one of processor cores **11** does not exhibit any activity for a specified amount of time, and the caches of that core has been flushed, core I/F power manager **215** may assert a corresponding clock-gating signal to clock-gate a corresponding core interface **21** (e.g., CGCI**1** may be asserted to clock-gate core interface **21-1**). If a clock-gated core interface **21** remains in the clock-gated state (i.e. no wake-up event occurs, such as an interrupt), then a power-gating signal may be asserted to power-gate the corresponding core interface.

If core I/F manager **215** determines that all of core interfaces **21** are clock-gated, it may assert the CGCoreArb signal to cause core arbitration unit **22** to be clock gated. In this particular embodiment, if the core interfaces **21** and core arbitration unit **22** remain clock-gated for a specified time, it may assert the PG**5** signal to power-gate each of these units. However, it is noted that other embodiments are possible and contemplated wherein each of core interfaces **21** and core arbitration unit **22** may be power-gated independently. In such cases, an embodiment of core I/F power manager **215** may be configured to assert separate power gating signals for each of the core interfaces **21** and core arbitration unit **22**.

Memory controller power manager **205** in the embodiment shown is configured to receive a number of different signals. From NBFE power manager **220**, memory controller power manager **205** may receive the CG**1** signal when communications hub **25** is clock-gated. Memory controller power manager **205** is also coupled to receive a signal indicating the fill ratio of the display buffer **142** and indications when GPU **14** requests a memory access.

Memory controller power manager **205** may monitor each of processor cores **11**, GPU **14**, and I/O interface **13** for memory access requests. If no memory access request is asserted for any of these units for a specified amount of time, and the buffer fill ration (for display buffer **142**) exceeds a certain threshold, memory controller power manager **205** may respond by asserting the low power state signal. This signal may be received by memory controller **18**, and may cause it to place memory **6** into a low power state (e.g., a self-refresh state). If memory **6** is in a low power state and the CG**1** signal is asserted (indicating that communication hub **25** is clock-gated), memory controller power manager **205** may respond by asserting the CG**3** signal. Responsive to assertion of the CG**3** signal, memory controller **18** may be clock-gated. Memory controller **18** may also be power gated if it remains clock gated for a specified amount of time.

FIG. **4** is a diagram illustrating one embodiment of NBFE power manager **220**. In the embodiment shown, NBFE power manager **220** includes an AND gate **223** coupled to receive the CGCoreArb signal on a first input. When asserted, this signal may indicate that all processor cores **11** are idle and clock-gated. The other input of AND gate **223** may be coupled to receive the signal I/O Interface Idle. This signal may be generated responsive to the absence of a DMA request from the I/O domain for a specified amount of time. When an I/O DMA request is asserted, it may reset timer **222-1**. Timer **222-1** may continue running until it reaches a specified time (e.g., a first time threshold), after which the I/O Interface Idle signal may be asserted. When this signal and the CGCoreArb signal are both asserted, the CG**1** signal may be asserted by the AND gate **223**. I/O north bridge interface **23** may be clock-gated as a result of the assertion of CG**1**.

When the I/O Interface Idle signal is not asserted, timer **222-2** may be held in a reset state due to inverter **225**. When the I/O Interface Idle is asserted, timer **222-2** may begin running up until another specified time (e.g., a second time threshold) is reached. Responsive to reaching the second time threshold, timer **222-2** may assert the CG**2** signal, which may cause communication hub to be clock-gated. The extra time between the clock-gating of I/O north bridge interface **23** and communication hub **25** may provide a hysteresis for in-flight memory traffic from the I/O domain. If such traffic exists, it may cause both I/O north bridge interface **23** and communication hub **25** to exit the clock-gated state.

Timer **222-3** may similarly be held in a reset state (due to another inverter **225**) when the CG**1** signal is not asserted. When CG**1** is asserted, timer **222-3** may begin running until another time threshold is reached. Responsive to reaching this time threshold, timer **222-3** may assert the PG**1** signal, which may in turn cause I/O north bridge interface **23** to be power-gated. Communication hub **25** may similarly be power-gated responsive to the assertion of the PG**2** signal by timer **222-4**, which may also be held in a reset state when the I/O Interface Idle signal is not asserted.

FIG. **5** is a diagram illustrating one embodiment of core I/F power manager **215**. in the embodiment shown, timers **222-5**, **222-6**, and **222-7** are each coupled to receive on respective reset inputs activity indications from corresponding ones of processor cores **11**. It is noted that the number of timers **222** in a particular embodiment of core I/F power manager **215** may correspond to the number of processor cores of the processor embodiment in which it is implemented. Accordingly, the number of these timers **222** may vary from one embodiment to the next.

The activity signals received by timers **222-5**, **222-6**, and **222-7** in this embodiment may be based on various metrics indicative of processor core activity. Such metrics may include instructions executed, instructions retired, pipeline stalls, branch mispredictions, and so forth. In general, any suitable metric that is indicative of processor core activity may be used. Signals corresponding to these metrics may be logically combined (e.g., using an OR gate) to generate the activity signals Core**1**Act, Core**2**Act, and so forth. For each instance that one of these core activity signals is asserted, the receiving timer **222** may be reset. When a core activity signal is not asserted, the receiving timer **222** may exit the reset state and begin running. If a threshold time is reached, the timer **222** may assert a signal on its Time output, thereby indicating that no core activity has been detected for a time greater than the time threshold. If the caches of the corresponding core have been flushed, then a corresponding AND gate **223** in the embodiment shown may assert the appropriate clock-gating signal. For example, if timer **222-5** asserts a signal on its Time output, and the 'CacheFlush**1**' signal is also asserted (indicating that core #**1**'s caches have been flushed), the corresponding AND gate **223** may assert the CGCI**1** signal, thereby causing core interface **21-1** to be clock-gated.

As noted above, in an ACPI-compliant embodiment, a lack of activity of a given processor core **11** may cause that core to enter a non-C**0** (i.e. non-operating) state. In such embodiments, the activity signals (e.g., Core**1**Act) may be asserted when the respective processor core **11** is in the C**0** state, thereby holding a respective timer (e.g., timer **222-5**) in a reset state. Once the C**0** state is exited for that processor core **11**, the corresponding timer **222** may be allowed to exit the reset state and begin running. If the timer reaches its threshold time, its Time output may be asserted. If the corresponding CacheFlush (e.g., CacheFlush**1**) signal is asserted, the respective processor core **11** may be clock gated.

In the embodiment shown, each of the clock-gating signals may be ANDed together by another AND gate **223**. If each of the processor cores **11** is clock-gated, the corresponding AND gate **223** may assert the CGCoreArb signal, thereby causing the core arbitration unit **22** to be clock-gated.

When the CGCoreArb signal is not asserted, timer **222-8** may be held in a reset state as the result of the output of the inverter **225** coupled to its reset input. Responsive to assertion of the CGCoreArb signal, timer **222-8** may exit the reset state and may begin running. If the corresponding time threshold is reached, timer **222-8** may respond by asserting the PG**5** signal, which may be provided to each of core interfaces **21** and core arbitration unit **22**. Responsive to receiving the asserted PG**5** signal, each of the core interfaces **21** and core arbitration unit **22** may be power-gated. It is noted however that alternate embodiments are possible and contemplated wherein each of the core interfaces **21** may be power-gated independently of one another. In one such embodiment, corresponding power-gating signals may be generated in a manner similar to that which PG**5** is generated. For example, in such an embodiment, the signal path for CGCI**1** could be coupled to a corresponding timer **222**, via an inverter **225**, with the timer held in the reset state until the CGCI**1** signal is asserted. A corresponding power-gating signal exclusive to that processor core **11** could be asserted at a threshold time subsequent to the corresponding timer **222** exiting the reset state.

One embodiment of memory controller power manager **205** is illustrated in FIG. **6**. In the embodiment shown, memory controller power manager **205** is coupled to receive memory request indications from each of the processor cores **11** and from GPU **14**. The indications of these requests may be ORed together by an OR gate **243**, the output of which is coupled to the reset input of timer **222-9**. Accordingly, for each instance of a memory request asserted by at least one of processor cores **11** and GPU **14**, timer **222-9** may be reset. In

an ACPI-compliant embodiment, the core activity signals (e.g., Core1Act) may remain asserted when the corresponding processor core **11** is in the C**0** state. Thus, when any processor core **11** is in the C**0** state, the output of OR gate **243** may be asserted. When the output of OR gate **243** is not asserted, timer **222-9** may exit the reset state and may begin running If the amount of time elapsed since the most recent memory request reaches a threshold value, timer **222-9** may assert a signal on its time output.

The signal conveyed from the Time output by timer **222-9** may be inverted by an inverter **225**, with its complement being provided as an input to the 2-input OR gate **243** coupled to timer **222-10**. The other input to the 2-input OR gate **243** is coupled to receive an indication of an I/O DMA request. Thus, in the configuration shown, timer **222-10** may be held in a reset state when the Time output of timer **222-9** is not asserted. If the Time output of timer **222-9** is asserted, timer **222-10** may be permitted to exit the reset state, but may be subsequently reset at any point if an I/O DMA request is made. Therefore, timer **222-10** may assert an output signal on its Time output if no memory access request or interrupt request has been made by or to any of processor cores **11** or GPU **14** for at least a first amount of time, and if no I/O DMA request have been made for at least a second amount of time.

The Time output of timer **222-10** is coupled to a first input of an AND gate **223** that is configured to generate the Low Power State signal. The second input of this AND gate **222** is coupled to receive a signal from the Threshold output of buffer monitor **242**. Buffer monitor **242** in the embodiment shown is configured to monitor the fill ratio of display buffer **142**. If the amount of data stored in display buffer **142** exceeds a specified threshold value, then buffer monitor **242** may assert a signal on its Threshold output. Otherwise, the signal may remain deasserted.

Embodiments are also possible and contemplated wherein, in lieu of using the state of the buffer fill ratio as a threshold indication, an indication of whether or not system memory is in a self-refresh state (e.g., DRAM self-refresh) may be used. It is noted that entry into the self-refresh state may require that the buffer fill ratio to exceed the specified threshold. Thus, an indication that the buffer fill ratio exceeds the threshold may be inherently indicated when indicating that system memory is in the self-refresh state.

When signals are asserted on both the Threshold output of buffer monitor **242** and the Time output of timer **222-10**, the AND gate **223** to which these units are coupled may assert the Low Power State signal. The Low Power State signal may be received by memory controller **18**, which may respond thereto by placing memory **6** in a low power state (e.g., into a self-refresh state). If both the Low Power State and CG**1** signals are asserted, another AND gate **223** may assert the CG**3** signal. Responsive to assertion of the CG**3** signal, memory controller **18** may be clock-gated.

Timer **222-11** is coupled to receive a complement of the CG**3** signal on its Reset input in the embodiment shown. If CG**3** is not asserted, timer **222-11** may be held in a reset state. When the CG**3** signal is asserted, timer **222-11** may exit the reset state and begin running Once the threshold time of timer **222-11** has been reached, the PG**3** signal may be asserted. Responsive to assertion of the PG**3** signal, memory controller **18** may be power-gated.

FIG. **7** is a diagram illustrating one embodiment of GPU I/F power manager **210**. GPU I/F power manager **210** may cause GPU north bridge interface **24** to be clock gated by asserting the CG**4** signal. In the embodiment shown, GPU I/F power manager **210** may assert the CG**4** signal responsive to of the occurrence of three different conditions. The occurrence of these conditions may indicate that GPU **14** is not expected to communicate with north bridge **12** (e.g., to provide a memory access request to memory controller **14**). In such situation, power savings may be realized by clock-gating GPU north bridge interface **24**.

A first of these conditions occurs if GPU **14** has not requested a memory access for a specified period of time. For each memory access asserted by GPU **14**, timer **222-12** may be reset. If the amount of time elapsed since the most recent memory access request exceeds a time specified is greater than or equal to a time specified by timer **222-12**, the Time signal from this timer may be asserted and propagated to a first input of AND gate **223**.

A second condition that may cause assertion of the CG**4** signal is the assertion of the GPU Idle signal. The GPU Idle signal may be asserted if it is determined, that display **3** is no longer updating or other conditions occur in which it is not expected to update. Furthermore, the GPU Idle signal may be asserted regardless of the amount of data stored in buffer monitor **242**. The GPU Idle signal may be received as a second input to AND gate **223**. It is noted that the GPU Idle signal may not be required in some embodiments.

The third condition may occur when the amount of data stored in display buffer **142** exceeds the threshold value as determined by buffer monitor **242**. When a large amount of data is stored in display buffer **142**, GPU **14** may be able to process data for display on display **3** without requesting access to memory **6** for a non-trivial amount of time. Thus, in this situation power savings may be realized by clock-gating GPU north bridge interface **14** even though GPU **14** may be actively processing data for display at this time. In some embodiments, two separate thresholds may be implemented, one high threshold and one low threshold. The high threshold may be used to trigger clock-gating of the GPU north bridge interface **24**. The low threshold may be used to trigger the discontinuing of clock-gating of GPU north bridge interface **24** in anticipation of memory access requests from GPU **14** to refill display buffer **142**. When the amount of data exceeds the threshold value, buffer monitor **242** may assert the threshold signal, which may be received as a third input to AND gate **223**. When all three of its inputs are asserted, AND gate **223** may assert the CG**4** signal as its output.

The complement of CG**4** may also be provided to the reset input of timer **222-13**, via inverter **225** as shown in FIG. **7**. When CG**4** is not asserted, timer **222-13** may be held in a reset state. When CG**4** is asserted, timer **222-13** may be permitted to exit the reset state and to start running. If the amount of time elapsed since the assertion of CG**4** meets or exceeds the threshold set by timer **222-13**, the PG **4** signal may be asserted. Responsive to assertion of the PG**4** signal, GPU north bridge interface **24** may be power gated.

As noted above, embodiments are possible and contemplated wherein the occurrence of any one of the conditions described above (with reference to FIG. **7**) may cause assertion of the CG**4** signal. In such embodiments, AND gate **223** may be replaced by an OR gate.

State Diagram and Method Flow:

FIG. **8** is a state diagram illustrating one embodiment of operation for clock and power-gating of system components. More particularly, FIG. **8** is a state diagram **300** describing the operation for clock-gating and power-gating the various functional units of one embodiment of north bridge **12**. Each of the components discussed above may be in one of three different states: an active state **305**, a clock-gating state **310**, or a power-gating state **315**.

In the active state **305**, a given functional unit may operate as normal, providing an interface between two or more other

units (e.g., between memory controller **18** and GPU **14**). If the given functional unit is idle (inactive) for a first threshold time, a power management unit **20** may transition it to the clock-gating state **310**. When in the clock-gating state **310**, the functional unit may continue to receive power, but is inhibited from receiving an active clock signal. If the idle time reaches a second time threshold, then the functional unit may be transitioned to the power-gating state **315**. In the power-gating state **315**, the functional unit may receive neither a clock signal nor power.

A wake-up event occurs when the functional unit is in either the clock-gating state **310** or the power-gating state **315**, the power management unit **20** may cause both clock-gating and power-gating of that functional unit to be discontinue, thereby enabling its return to the active state **305**. Examples of wake-up events include the assertion of a memory access request (including DMA requests), an interrupt request, and so on. In general, with respect to a given functional unit, a wake-up event may be defined as any event that would necessitate that functional unit being in active state **305** (e.g., when a core interface **21** and core arbitration unit **22** are needed to facilitate communications with memory controller **18**).

A flow diagram illustrating one embodiment of a method for clock and power-gating of bridge unit components is shown in FIG. **9**. It is noted that while FIG. **9** illustrates a sequence of events, that this particular sequence is not necessarily required for any particular embodiment (including the one illustrated), but instead is exemplary. While some events may be required to be performed in a certain sequence, others may be performed in any sequence. Accordingly, where possible, certain events shown in FIG. **9** (e.g., the wake-up event of block **430**) may occur anywhere in the sequence. The particular position of certain events within a sequence as shown in FIG. **9** is thus for illustrative purposes only, and is not intended to be limiting.

Method **400** begins with a determination of whether or not any cores are idle (block **402**). If no cores are idle (block **402**, no), then no further action occurs responsive to the determination. If it is determined that at least one core is idle for at least a specified amount of time (block **402**, yes), then the corresponding core interface may be clock gated (block **404**). The method may also determine whether or not all cores are idle (block **406**). If at least one core is idle but other cores are active (block **406**, no), no further core interfaces are clock-gated, although those that were already clock-gated may remain so in the absence of any wake-up event. If it is determined that all cores are idle (block **406**, yes), then, in addition to clock-gating each of the core interfaces, the core arbitration unit may also be clock-gated (block **408**).

In block **410**, a determination is made as to whether or not an I/O interface (e.g., a south bridge) is idle. If the I/O interface is idle (block **410**), then the I/O bridge unit interface may be clock-gated (block **412**). Additionally, if the I/O interface has remained idle for a time exceeding a first threshold (block **414**, yes), then the communication hub may also be clock-gated (block **416**). Otherwise, (block **414**, no), the communication hub is not clock-gated.

If the communication hub has been clock-gated in block **416**, and the memory is in a low power state (block **418**, yes), then the memory control may be clock-gated (block **420**). Otherwise (block **418**, no), the clock-gating of the I/O bridge unit may continue per block **416**, but the memory controller is not clock-gated.

If the GPU to memory interface is not idle (block **422**, no), the GPU interface remains in an active state. However, if it is determined that the GPU to memory interface is idle (block **422**, yes), then the GPU interface may be clock-gated. Other conditions may also cause the GPU interface to be clock-gated, such as a determination that an amount of data stored in a display buffer exceeds a predetermined threshold.

If the idle time of any one of the components of the bridge unit meets or exceeds a second threshold (block **426**, yes), then that functional unit may be power-gated (block **428**). If the idle time of a functional unit is less than the second threshold (block **426**, no), the functional unit may remain clock-gated, or may return to an active state.

If no wake-up event occurs for a functional unit (block **430**, no), then that functional unit may remain in a clock-gated state or a power-gated state. However, if a wake-up event does occur (block **430**, yes), then clock-gating and power-gating may be discontinued for that unit, thereby enabling it to resume functioning in the active state. If all units are returned to the active state, then this particular method embodiment may return, via (1), to block **402**.

Computer Accessible Storage Medium:

Turning next to FIG. **10**, a block diagram of a computer accessible storage medium **500** including a database **505** representative of the system **10** is shown. Generally speaking, a computer accessible storage medium **400** may include any non-transitory storage media accessible by a computer during use to provide instructions and/or data to the computer. For example, a computer accessible storage medium **400** may include storage media such as magnetic or optical media, e.g., disk (fixed or removable), tape, CD-ROM, or DVD-ROM, CD-R, CD-RW, DVD-R, DVD-RW, or Blu-Ray. Storage media may further include volatile or non-volatile memory media such as RAM (e.g. synchronous dynamic RAM (SDRAM), double data rate (DDR, DDR2, DDR3, etc.) SDRAM, low-power DDR (LPDDR2, etc.) SDRAM, Rambus DRAM (RDRAM), static RAM (SRAM), etc.), ROM, Flash memory, non-volatile memory (e.g. Flash memory) accessible via a peripheral interface such as the Universal Serial Bus (USB) interface, etc. Storage media may include microelectromechanical systems (MEMS), as well as storage media accessible via a communication medium such as a network and/or a wireless link.

Generally, the data **505** representative of the system **10** carried on the computer accessible storage medium **500** may be a database or other data structure which can be read by a program and used, directly or indirectly, to fabricate the hardware comprising the system **10**. For example, the database **505** may be a behavioral-level description or register-transfer level (RTL) description of the hardware functionality in a high level design language (HDL) such as Verilog or VHDL. The description may be read by a synthesis tool which may synthesize the description to produce a netlist comprising a list of gates from a synthesis library. The netlist comprises a set of gates which also represent the functionality of the hardware comprising the system **10**. The netlist may then be placed and routed to produce a data set describing geometric shapes to be applied to masks. The masks may then be used in various semiconductor fabrication steps to produce a semiconductor circuit or circuits corresponding to the system **10**. Alternatively, the database **505** on the computer accessible storage medium **500** may be the netlist (with or without the synthesis library) or the data set, as desired, or Graphic Data System (GDS) II data.

While the computer accessible storage medium **500** carries a representation of the system **10**, other embodiments may carry a representation of any portion of the system **10**, as desired, including IC **2**, any set of agents (e.g., processing

cores **11**, I/O interface **13**, power management unit **20**, etc.) or portions of agents (e.g., north bridge front end power manager **220**, etc.).

While the present invention has been described with reference to particular embodiments, it will be understood that the embodiments are illustrative and that the invention scope is not so limited. Any variations, modifications, additions, and improvements to the embodiments described are possible. These variations, modifications, additions, and improvements may fall within the scope of the inventions as detailed within the following claims.

What is claimed is:

1. A system comprising:

a bridge unit including:

a memory controller; and

a communication hub coupled to the memory controller; and

a power management unit, wherein the power management unit is configured to clock-gate the communication hub responsive to each of a plurality of processor cores being in an idle state and an I/O interface unit being idle for an amount of time exceeding a first threshold, and further configured to clock-gate the memory controller responsive to clock-gating the communication hub and determining that a memory coupled to the memory controller is in a first low power state.

2. The system as recited in claim **1**, further comprising a plurality of core interface units, wherein each of the core interface units is coupled between the communication hub and a corresponding one of the plurality of processor cores, and wherein the power management unit is configured to clock-gate a particular one of the core interface units responsive to determining that its corresponding processor core is in an idle state and that one or more caches in the corresponding processor core have been flushed.

3. The system as recited in claim **2**, further comprising a core arbitration unit coupled to each of the plurality of core interface units, wherein the power management unit is configured to clock-gate the core arbitration unit responsive to determining that each of the plurality of core interface units is clock-gated.

4. The system as recited in claim **1**, wherein the power management unit is configured to clock-gate the I/O interface unit responsive to determining that the I/O interface unit has been idle for an amount of time exceeding a second threshold.

5. The system as recited in claim **1**, wherein at least one of said plurality of cores comprises a graphics processing unit (GPU) and a GPU interface unit, wherein the power management unit is configured to clock-gate the GPU interface unit responsive to determining that the GPU is idle.

6. The system as recited in claim **1**, further comprising a graphics processing unit (GPU) and a GPU interface unit, wherein the power management unit is configured to clock-gate the GPU interface unit responsive to determining that the GPU is idle.

7. The system as recited in claim **6**, wherein the power management unit is configured to determine that the GPU is idle responsive to receiving an indication that the GPU is no longer updating a display.

8. The system as recited in claim **6**, wherein the power management unit is configured to determine that the GPU is idle responsive to an absence of memory accesses by the GPU for an amount of time exceeding a second threshold.

9. The system as recited in claim **6**, wherein the GPU includes a display buffer, and wherein the power management unit is configured to cause the memory to enter the first low power state responsive to determining that an amount of data stored in the display buffer exceeds a threshold value.

10. The system as recited in claim **9**, wherein the power management unit is configured to, responsive to the amount of data stored in the display buffer falling below the threshold value:

discontinue clock-gating the memory controller; and

cause the memory to enter an active state.

11. The system as recited in claim **6**, wherein the power management unit is configured to discontinue clock-gating the GPU interface responsive to determining that the GPU is no longer idle.

12. The system as recited in claim **1**, wherein the power management unit is further configured to cause power to be removed from the communication hub and the memory controller responsive to determining that the communication hub and the memory controller have been clock-gated for an amount of time exceeding a second threshold.

13. The system as recited in claim **12**, wherein the power management unit is configured to restore power and discontinue clock-gating to the communication hub and the memory controller responsive to one or more of the following:

one or more of the plurality of processor cores entering an active state;

the I/O unit asserting a memory request.

14. A method comprising:

clock-gating a communication hub of a bridge unit responsive to each of a plurality of processor cores being in an idle state and an I/O interface unit being idle for an amount of time exceeding a first threshold; and

clock-gating a memory controller of the bridge unit responsive to clock-gating the communication hub and determining that a memory coupled to the memory controller is in a first low power state.

15. The method as recited in claim **14**, wherein the bridge unit includes a plurality of core interface units each coupled to a corresponding one of the plurality of processor cores, and wherein the method further comprises clock-gating a particular one of the core interface unit responsive to determining that its corresponding one of the plurality of processor cores is in an idle state.

16. The method as recited in claim **15**, further comprising clock-gating a core arbitration unit coupled to each of the plurality of core interface units responsive to determining that each of the core interface units is clock-gated.

17. The method as recited in claim **14**, further comprising clock-gating the I/O interface unit responsive to determining that the I/O interface unit has been idle for an amount of time exceeding a second threshold.

18. The method as recited in claim **14**, further comprising clock-gating a graphics processing unit (GPU) interface of the bridge unit responsive to determining that a GPU coupled to the GPU interface is idle.

19. The method as recited in claim **18**, further comprising determining that the GPU is idle responsive to receiving an indication that the GPU is no longer updating a display.

20. The method as recited in claim **18**, further comprising determining that the GPU is idle responsive to an absence of a memory request from the GPU for an amount of time exceeding a second threshold.

21. The method as recited in claim **18**, wherein the GPU includes a display buffer, and wherein the method further comprises the memory entering the first low power state responsive to determining that an amount of data stored in the display buffer exceeds a threshold value.

22. The method as recited in claim **21**, further comprising, responsive to the amount of data stored in the display buffer falling below the threshold value:

discontinuing clock-gating the memory controller; and

causing the memory to enter an active state.

23. The method as recited in claim **18**, further comprising discontinuing clock-gating the GPU interface responsive to determining that the GPU is no longer idle.

24. The method as recited in claim **14**, further comprising removing power from the communication hub and the memory controller responsive to determining that both the communication hub and the memory controller have been clock-gated for at least an amount of time exceeding a second threshold.

25. The method as recited in claim **24**, further comprising discontinuing clock-gating and applying power to both the communication hub and the memory controller responsive to one or more of the following:

one or more of the plurality of processor cores entering an active state;

the I/O unit conveying a memory request.

26. A non-transitory computer readable medium comprising a data structure which is operated upon by a program executable on a computer system, the program operating on the data structure to perform a portion of a process to fabricate an integrated circuit including circuitry described by the data structure, the circuitry described in the data structure including:

a bridge unit including:

a memory controller; and

a communication hub coupled to the memory controller; and

a power management unit, wherein the power management unit is configured to clock-gate the communication hub responsive to each of a plurality of processor cores being in an idle state and that an I/O interface being idle for an amount of time exceeding a first threshold, and further configured to clock-gate the memory controller responsive to clock-gating the communication hub and determining that a memory coupled to the memory controller is in a first low power state.

27. The computer readable medium as recited in claim **26**, wherein the circuitry described in the data structure further includes;

a plurality of core interface units, wherein each of the core interface units is coupled between the communication hub and a corresponding one of the plurality of processor cores, and wherein the power management unit described in the data structure is configured to clock-gate a particular one of the core interface units responsive to determining that its corresponding processor core is in an idle state and that one or more caches in the corresponding processor core have been flushed; and

a core arbitration unit coupled to each of the plurality of core interface units, wherein the power management unit described in the data structure is configured to clock-gate the core arbitration unit responsive to determining that each of the plurality of core interface units is clock-gated.

28. The computer readable medium as recited in claim **26**, wherein the circuitry described in the data structure further includes a graphics processing unit (GPU) and a GPU interface unit, wherein the power management unit described in the data structure is configured to clock-gate the GPU interface unit responsive to determining that the GPU is idle.

29. The computer readable medium as recited in claim **26**, wherein the power management unit described in the data structure is further configured to cause power to be removed from the communication hub and the memory controller responsive to determining that the communication hub and the memory controller have been clock-gated for an amount of time exceeding a second threshold.

30. The computer readable medium as recited in claim **29** wherein the power management unit described in the data structure is further configured to restore power and discontinue clock-gating to the communication hub and the memory controller responsive to one or more of the following:

one or more of the plurality of processor cores entering an active state;

the I/O unit asserting a memory request.

31. The computer readable medium as recited in claim **26**, wherein the data structure comprises one or more of the following types of data:

HDL (high-level design language) data;

RTL (register transfer level) data;

Graphic Data System (GDS) II data.

* * * * *