US 20060186214A1

(19) United States

(12) Patent Application Publication

(10) Pub. No.: US 2006/0186214 A1

(43) Pub. Date: Aug. 24, 2006

Simon et al.

(54) THERMOSTAT OPERATION METHOD AND APPARATUS

(75) Inventors: **Timothy M. Simon**, San Francisco, CA (US); **Blaine M. Smith**, Portland, OR (US); **Matthew T. Fisher**, Reno, NV (US)

Correspondence Address:
HAYNES BEFFEL & WOLFELD LLP
P O BOX 366
HALF MOON BAY, CA 94019 (US)

(73) Assignee: **Tim Simon, Inc.**, San Francisco, CA

(21) Appl. No.: **11/335,182**

(22) Filed: **Jan. 19, 2006**

Related U.S. Application Data

(60) Provisional application No. 60/645,083, filed on Jan. 19, 2005. Provisional application No. 60/664,561, filed on Mar. 23, 2005.

Publication Classification

(51) **Int. Cl.**

G05D	*23/12*	(2006.01)
B64D	*13/00*	(2006.01)
F24F	*11/053*	(2006.01)

(52) **U.S. Cl.** ..... **236/1 C**; 236/91 D

(57) **ABSTRACT**

A thermostat may be placed in a heating mode when the sensed temperature is less than the lowest of the heating and cooling target temperatures by a first amount and may be placed in a cooling mode when the sensed temperature is greater than the highest of the heating and cooling target temperatures by a second amount. The presence or absence of a user may be monitored. If the thermostat is in a user absent mode, a cool setback amount may be added to the cooling target temperature and a heat setback amount may be subtracted from the heating target temperature to arrive at setback cooling and setback heating target temperatures, respectively. The thermostat may comprise a touch-sensitive screen having various display areas.

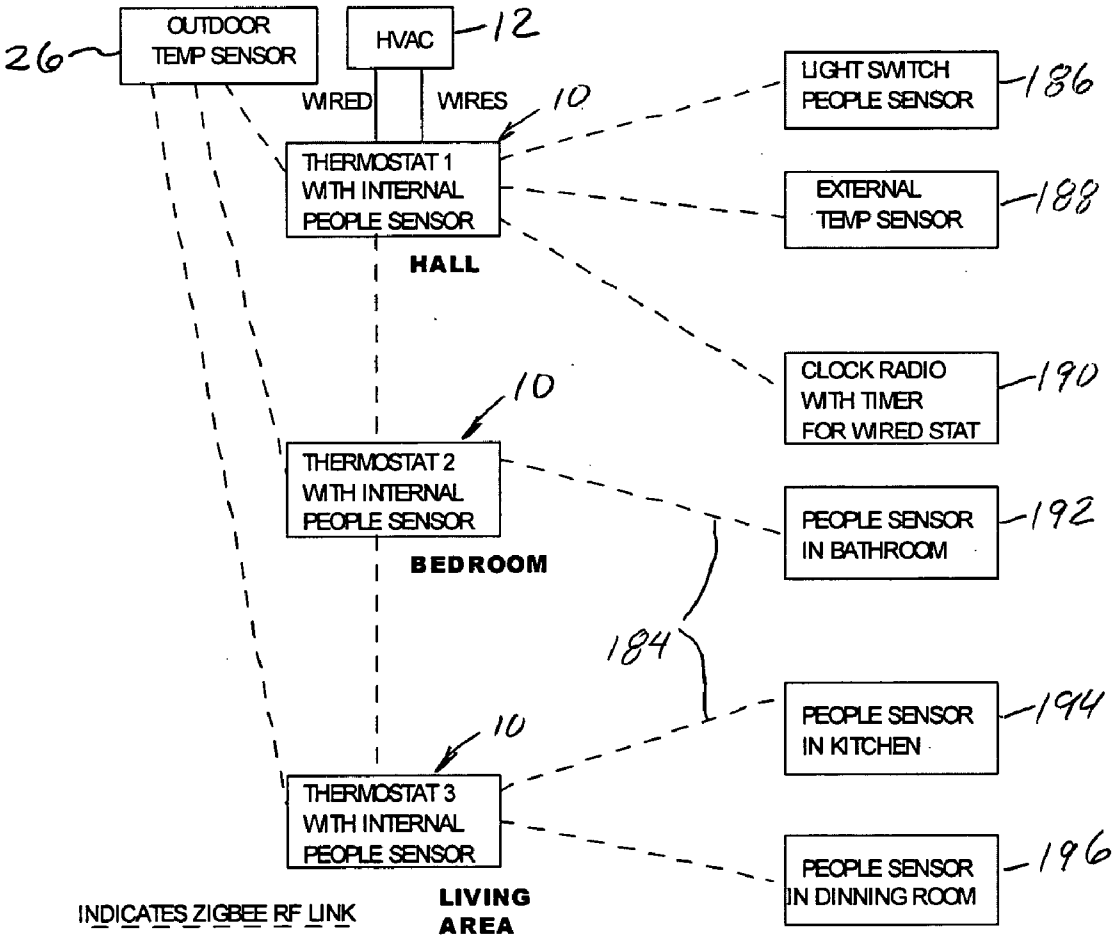

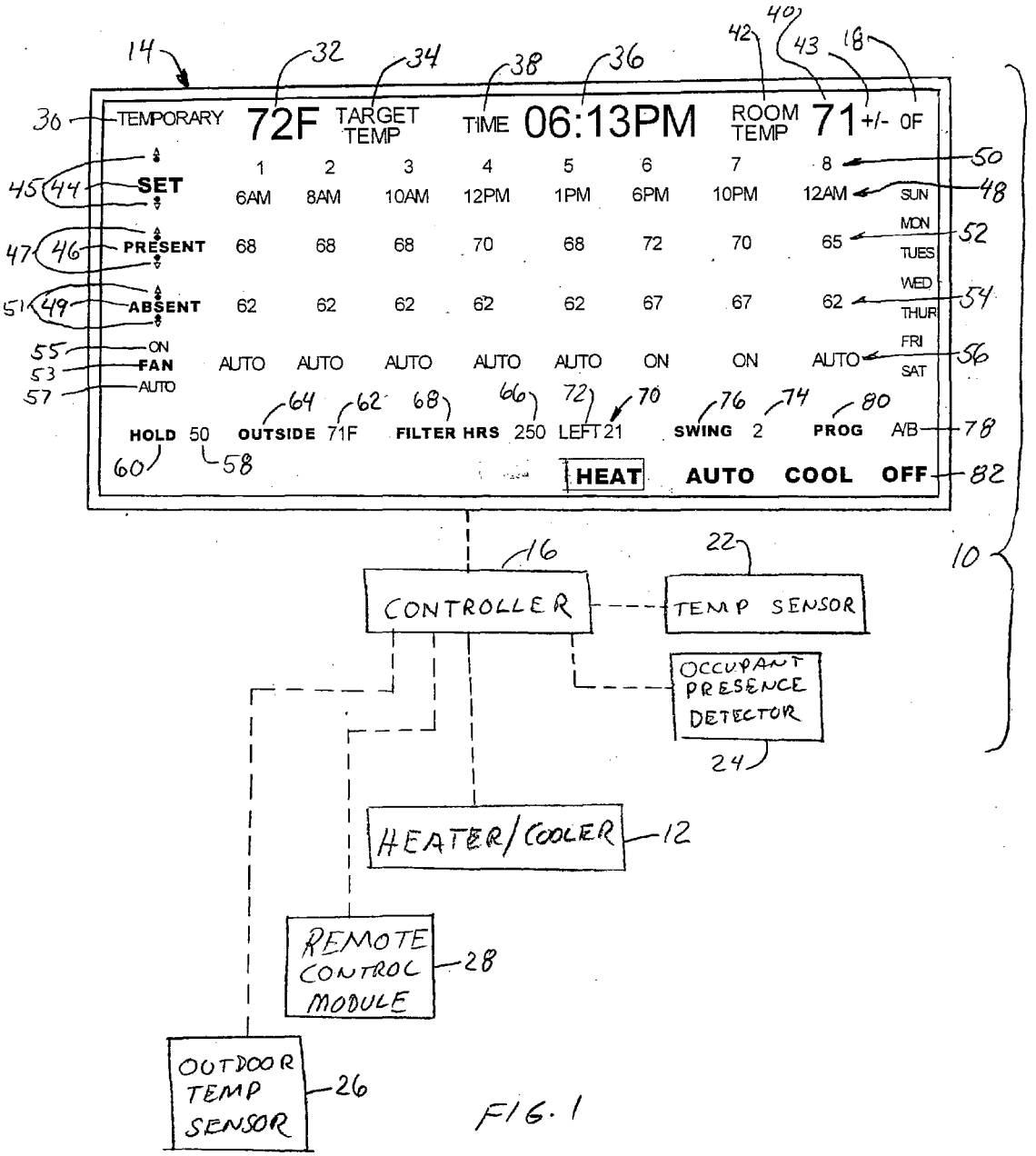
TEMPORARY
72F
TARGET TEMP
TIME
06:13PM
ROOM TEMP
71
+/- 0F
SET
PRESENT
ABSENT
ON
FAN
AUTO
1 2 3 4 5 6 7 8
6AM 8AM 10AM 12PM 1PM 6PM 10PM 12AM
SUN MON TUES WED THUR FRI SAT
68 68 68 70 68 72 70 65
62 62 62 62 62 67 67 62
AUTO AUTO AUTO AUTO AUTO ON ON AUTO
HOLD 50
OUTSIDE 71F
FILTER HRS 250
LEFT 21
SWING 2
PROG A/B
HEAT AUTO COOL OFF
CONTROLLER
TEMP SENSOR
OCCUPANT PRESENCE DETECTOR
HEATER/COOLER
REMOTE CONTROL MODULE
OUTDOOR TEMP SENSOR

FIG. 1

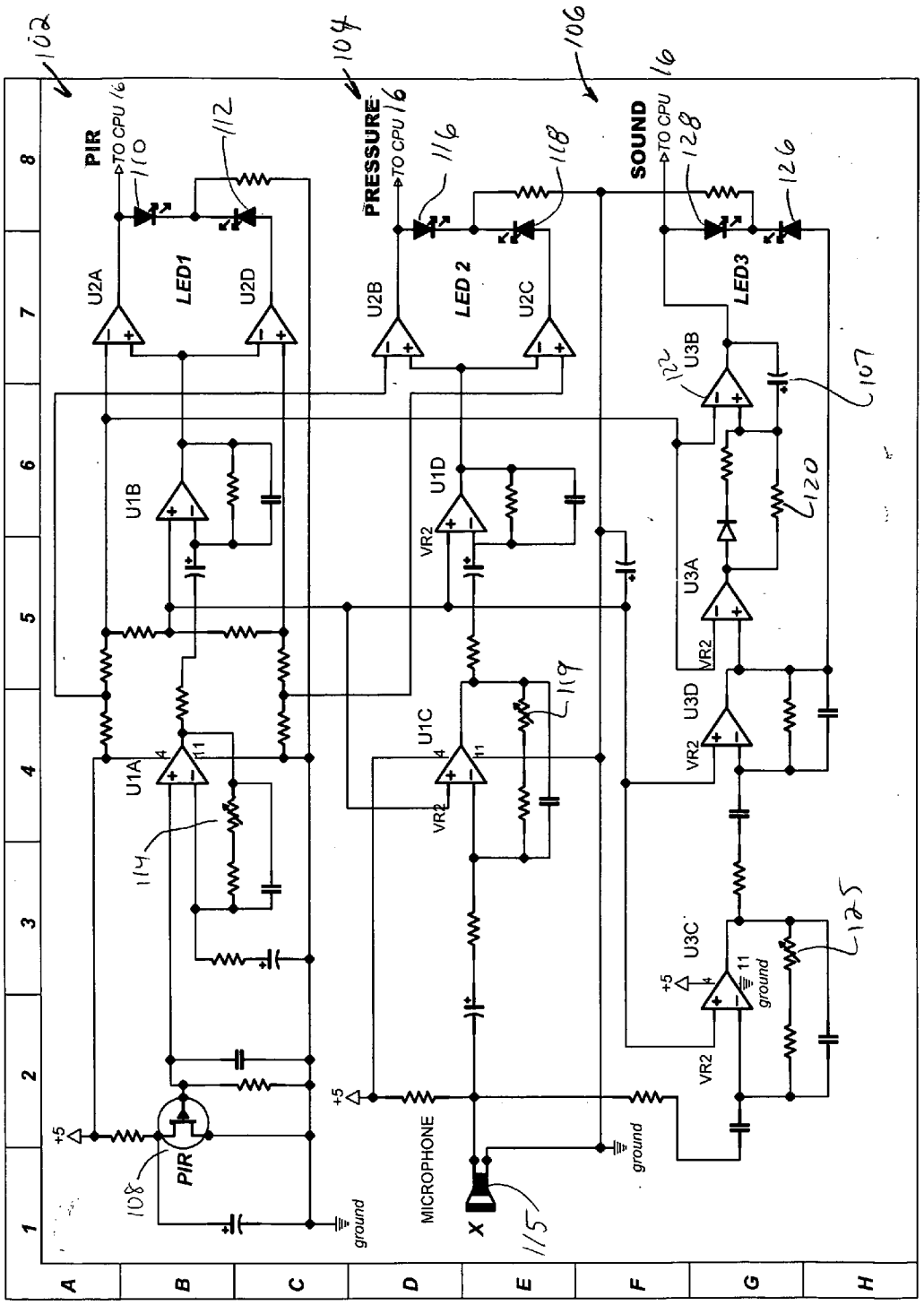
PIR
TO CPU 16
PRESSURE
TO CPU 16
SOUND
TO CPU 16
LED1
LED 2
LED3
U2A
U2D
U2B
U2C
U1A
U1B
U1C
U1D
U3A
U3B
U3C
U3D
VR2
MICROPHONE
X
ground
+5
102
104
106
108
110
112
114
115
116
118
119
120
122
125
126
128
24

FIG. 2

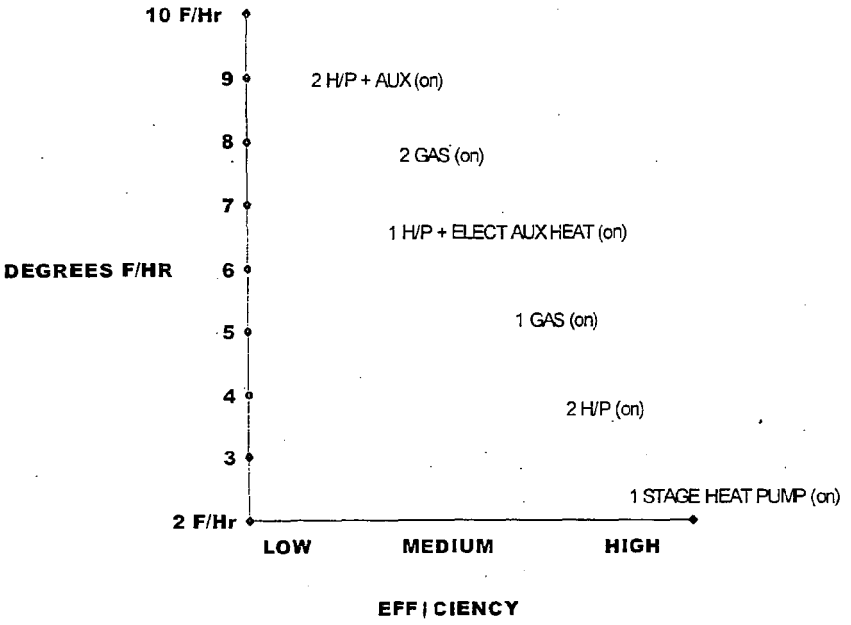
10 F/Hr
9
8
7
6
5
4
3
2 F/Hr
DEGREES F/HR
2 H/P + AUX (on)
2 GAS (on)
1 H/P + ELECT AUX HEAT (on)
1 GAS (on)
2 H/P (on)
1 STAGE HEAT PUMP (on)
LOW
MEDIUM
HIGH
EFFICIENCY

FIG. 3

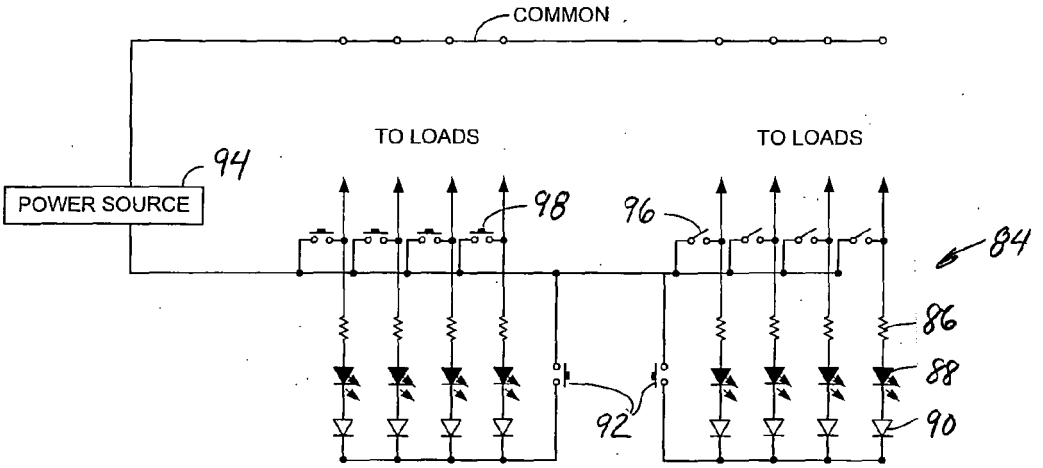
COMMON
TO LOADS
TO LOADS
POWER SOURCE
94
98
96
84
86
88
90
92

FIG. 4

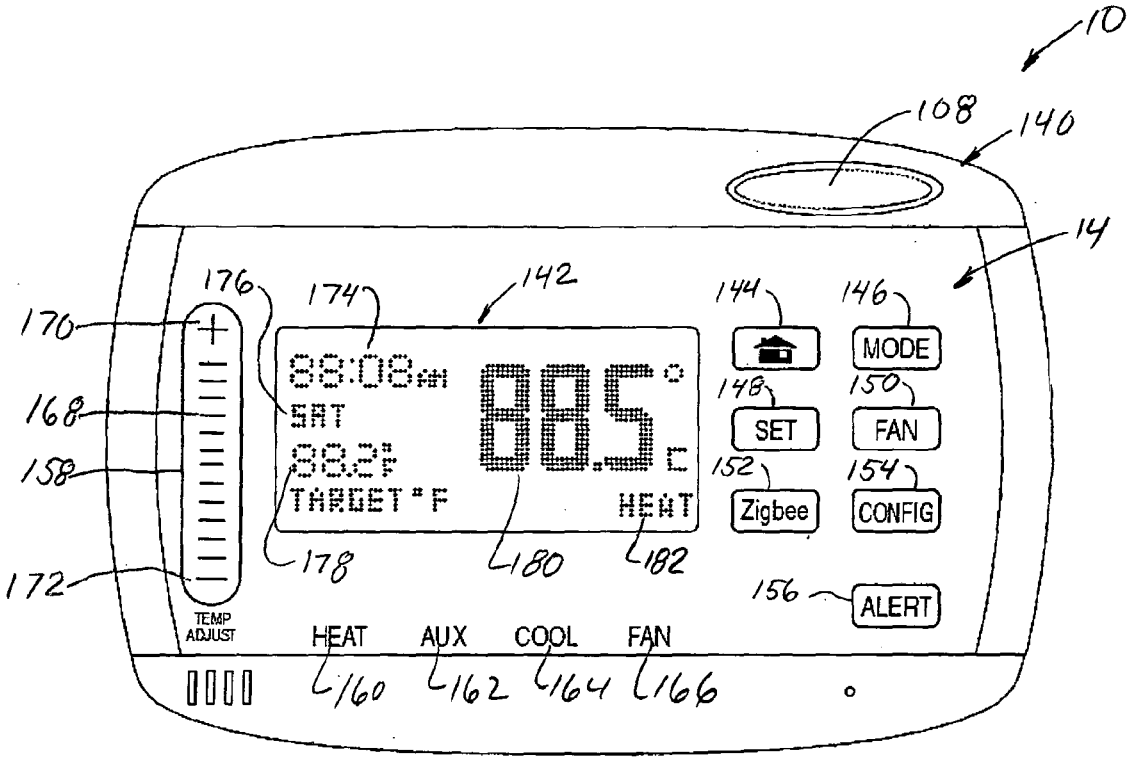
10
108
140
14
176
174
142
144
146
170
MODE
168
148
150
SET
FAN
158
152
154
Zigbee
CONFIG
TARGET °F
HEAT
178
180
182
172
156
ALERT
TEMP ADJUST
HEAT
AUX
COOL
FAN
160
162
164
166

FIG. 5

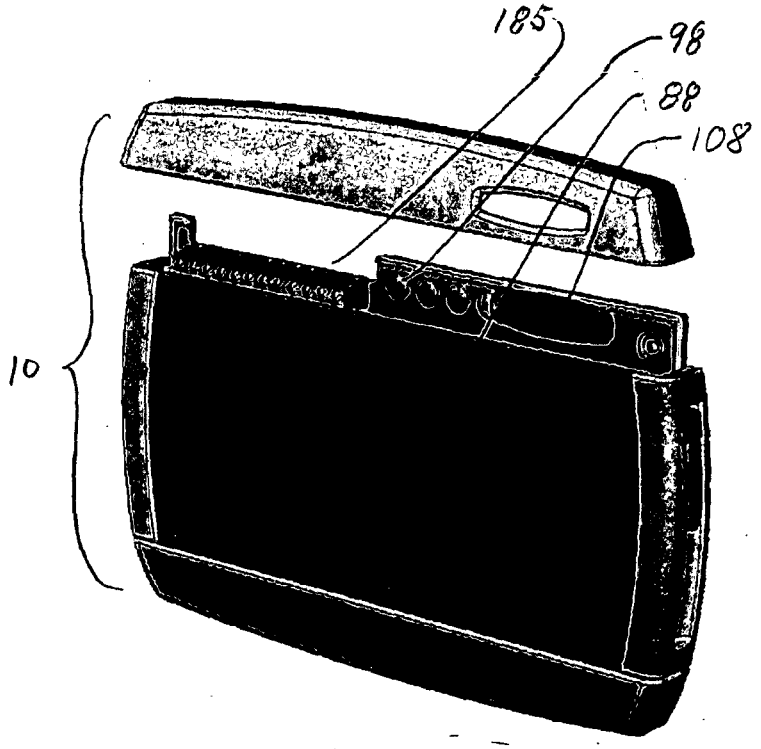
185
98
88
108
10

FIG. 6

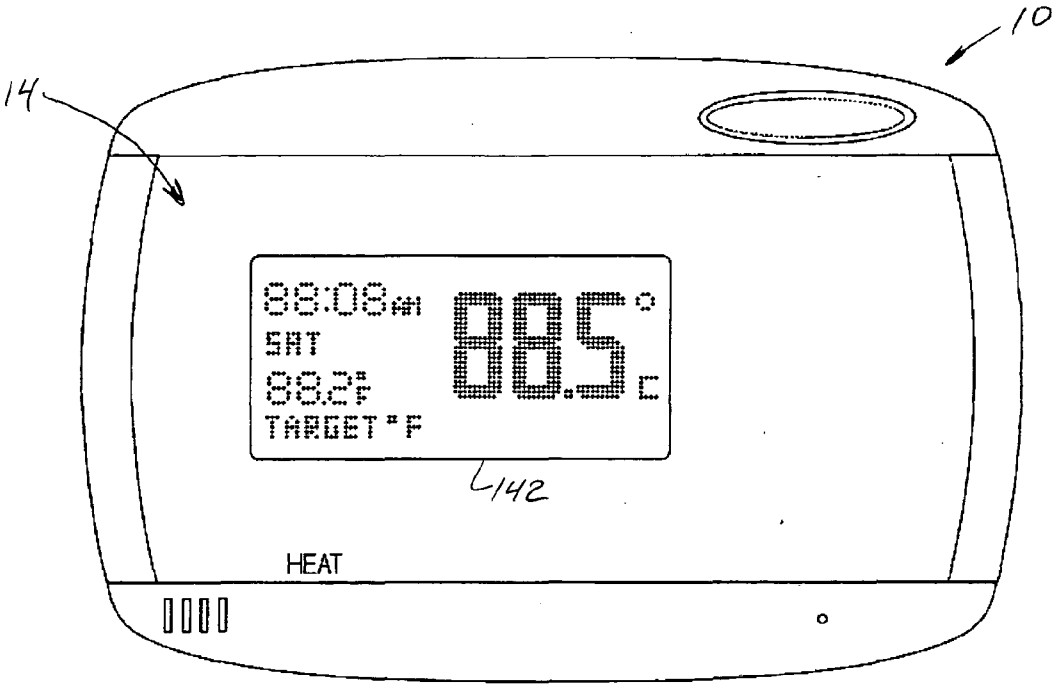

FIG. 7

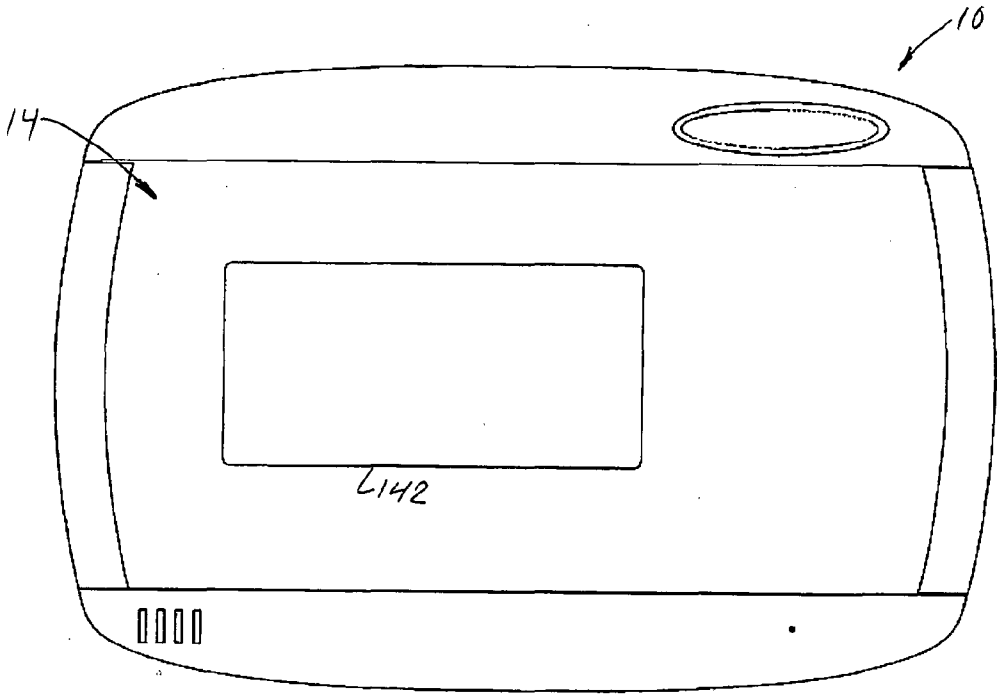

FIG. 8

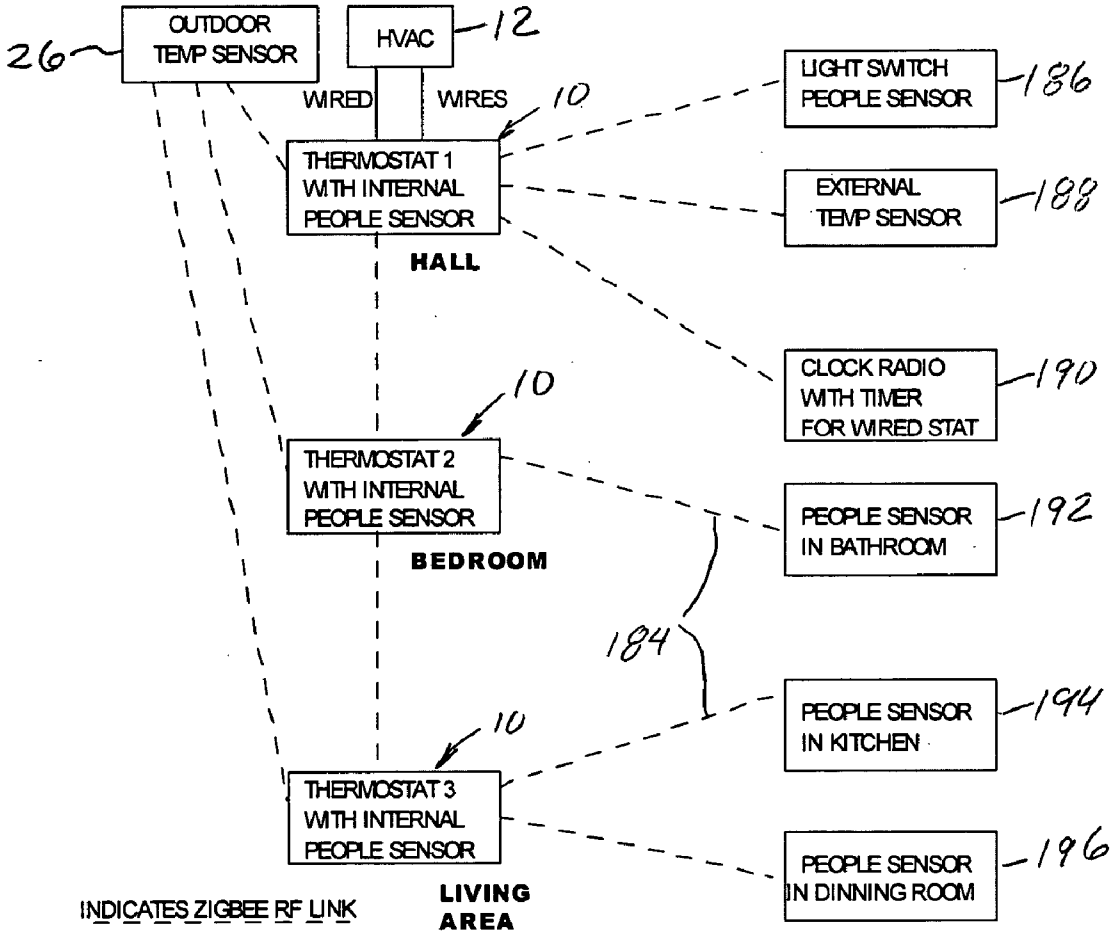
OUTDOOR TEMP SENSOR
26
HVAC
12
WIRED
WIRES
10
THERMOSTAT 1 WITH INTERNAL PEOPLE SENSOR
HALL
LIGHT SWITCH PEOPLE SENSOR
186
EXTERNAL TEMP SENSOR
188
CLOCK RADIO WITH TIMER FOR WIRED STAT
190
10
THERMOSTAT 2 WITH INTERNAL PEOPLE SENSOR
BEDROOM
PEOPLE SENSOR IN BATHROOM
192
184
PEOPLE SENSOR IN KITCHEN
194
10
THERMOSTAT 3 WITH INTERNAL PEOPLE SENSOR
LIVING AREA
PEOPLE SENSOR IN DINNING ROOM
196
INDICATES ZIGBEE RF LINK

FIG. 9

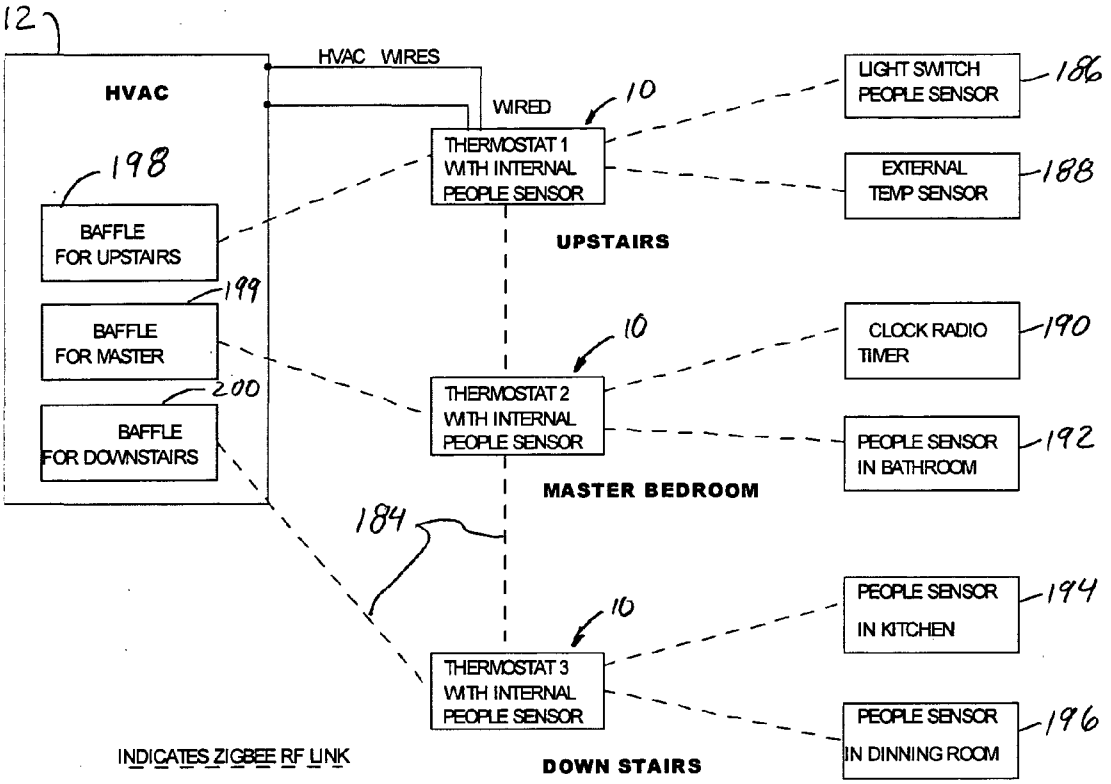
12
HVAC
HVAC WIRES
WIRED
10
THERMOSTAT 1 WITH INTERNAL PEOPLE SENSOR
UPSTAIRS
198
BAFFLE FOR UPSTAIRS
199
BAFFLE FOR MASTER
200
BAFFLE FOR DOWNSTAIRS
LIGHT SWITCH PEOPLE SENSOR
186
EXTERNAL TEMP SENSOR
188
10
THERMOSTAT 2 WITH INTERNAL PEOPLE SENSOR
MASTER BEDROOM
CLOCK RADIO TIMER
190
PEOPLE SENSOR IN BATHROOM
192
184
10
THERMOSTAT 3 WITH INTERNAL PEOPLE SENSOR
DOWN STAIRS
PEOPLE SENSOR IN KITCHEN
194
PEOPLE SENSOR IN DINNING ROOM
196
INDICATES ZIGBEE RF LINK

FIG. 10

THERMOSTAT OPERATION METHOD AND APPARATUS

CROSS-REFERENCE TO RELATED APPLICATIONS

[0001] This patent application claims the benefit of provisional patent application No. 60/645,083, filed 19 Jan. 2005, Attorney Docket number TIMS 1007-1, entitled Thermostat With Touch-Screen Display, and provisional patent application No. 60/664,561, filed 23 Mar. 2005, Attorney Docket number TIMS 1009-1, entitled Water Timer and Method.

[0002] This application is related to U.S. application Ser. No. _____ (Attorney Docket TIMS 1007-3), titled Multiple Thermostat Installation, filed on 19 Jan. 2006.

STATEMENT REGARDING FEDERALLY SPONSORED RESEARCH OR DEVELOPMENT

[0003] Not applicable.

REFERENCE TO MICROFICHE APPENDIX

[0004] Not applicable.

BACKGROUND OF THE INVENTION

[0005] The present invention relates generally to thermostats used for heating and cooling systems, such as gas or electric forced air furnaces, gas or electric radiant heating furnaces, electric forced air air-conditioning systems, and electric heat pumps. Invention may also be suitable for other types of systems, including solar and solar electric heating and cooling systems.

[0006] Digital set-back programmable thermostats typically use a screen, such as a liquid-crystal display (LCD), to display both operational functions and programming values. The user enters commands into the thermostat, such as for setting the current time and date and programming the thermostat, by pressing keys or pressing appropriate positions on a touch screen display. In many cases a set of instructions explaining the steps that must be taken to operate the thermostat is printed on the thermostat or separately documented so that programming such a thermostat can be quite confusing and tedious. Also, programming conventional thermostats is typically accomplished only after selecting a series of different screens on the display. In addition, information relating to the status of the thermostat and the settings in the program controlling the thermostat is often accessible only by reviewing different screens on the display.

[0007] Many thermostats are used to control both a furnace in the heating mode and an air-conditioning unit in the cooling mode. The heating and cooling modes are typically controlled manually. That is, the user sets the thermostat to either cool or heat so that only the furnace or only the air-conditioning unit is operational in the chosen mode.

[0008] Many programmable thermostats have only heat, off, or cool. Programmable thermostats that have an automatic setting, sometimes referred to as auto thermostats, typically have heat, auto, cool, off. In both cases, the user can put in separate setting times and temperatures for a heat program and for a cool program. Auto thermostats automatically switch between the user's heat and cool programs as a function of room temperature.

[0009] There are typically two limitations associated with conventional auto thermostats. One limitation is the heat and cool program times must be the same; that is the times for each period (typically morning, day, evening, night) must be the same. The other limitation is the user's cool program can never be closer than X degrees (typically 3° F.) to the user's heat program. So if the user sets the heat target temperature to 70, the cool target temperature cannot be set any closer than 73 in this example. When the user tries to lower the cool target temperature below 73, the programming of the thermostat typically just stops and frustrates the user. Likewise, if the user wants to raise the heat setting, for example changing the heat target temperature from 70 to 72, the higher temperature may be too close to the cool target temperature so that the programming of the thermostat may also stop.

[0010] Although programmable thermostats hold out the promise of reducing the energy used by heating systems, the U.S. Environmental Protection Agency, which provides the ENERGY STAR certification for appliances and other devices, has expressed concern that potential energy savings are not being realized because of the difficulties consumers face trying to program conventional digital thermostats.

BRIEF SUMMARY OF THE INVENTION

[0011] A first aspect of the invention is directed to a method for automatically switching between heating and cooling modes of a thermostat, comprising: setting a heating target temperature; setting a cooling target temperature; sensing the temperature within a conditioned region; placing the thermostat in a heating mode when the sensed temperature is less than the lowest of the heating and cooling target temperatures by a first amount; and placing the thermostat in a cooling mode when the sensed temperature is greater than the highest of the heating and cooling target temperatures by a second amount.

[0012] A second aspect of the invention is directed to a method for automatically switching between heating and cooling modes of a thermostat, comprising: setting a heating target temperature; setting a cooling target temperature; sensing the temperature within a conditioned region; determining the apparent presence or absence of a user; and placing the thermostat in a user present mode or a user absent mode based upon the result of the determining step. If the thermostat is in a user present mode, then: place the thermostat in a heating mode when the sensed temperature is less than the lowest of the heating and cooling target temperatures by a first amount; and place the thermostat in a cooling mode when the sensed temperature is greater than the highest of the heating and cooling target temperatures by a second amount. If the thermostat is in a user absent mode, then: add the cool setback amount to the cooling target temperature and subtract the heat setback amount from the heating target temperature to arrive at setback cooling and setback heating target temperatures, respectively. The thermostat is placed in a heating mode when the sensed temperature is less than the setback heating target temperature. The thermostat is placed in a cooling mode when the sensed temperature is greater than the setback cooling target temperature.

[0013] A third aspect of the invention is directed to a method for automatically switching between heating and cooling modes of a thermostat, the thermostat comprising a thermostat controller, the method comprising: setting a heating target temperature; setting a cooling target temperature; sensing the temperature within a conditioned region; and determining the apparent presence or absence of a user. The determining step is carried out using each of the following: sensing motion within a monitored region and providing an occupant present signal to the thermostat controller when motion above a threshold minimum level has been sensed; detecting air pressure changes and providing a change in occupancy signal to the controller when an air pressure change above a threshold minimum level has been sensed; and monitoring sound level and integrating the monitored sound level over time and providing an occupant present signal to the controller when sound above a threshold minimum integrated sound level has been sensed. The thermostat is placed in a user present mode or a user absent mode based upon any one of the motion sensing, air pressure detecting or sound level monitoring steps.

[0014] A fourth aspect of the invention is directed to a thermostat comprising: a user interface; a controller coupled to the user interface and configured to provide a target temperature signal to a heater/cooler; a temperature sensor operably coupled to the controller; and an occupant presence detector operably coupled to the controller to provide the controller with an occupant present/absent signal according to the perceived presence/absence of an occupant. The occupant presence detector comprises: a motion sensor constructed to provide an occupant present signal to the controller when motion above a threshold minimum level has been sensed; an air pressure change detector constructed to provide a change in occupancy signal to the controller when an air pressure change above a threshold minimum level has been sensed; and an integrating sound level sensor constructed to integrate sensed sound level over time and provide an occupant present signal to the controller when sound above a threshold minimum integrated sound level has been sensed.

[0015] A fifth aspect of the invention is directed to a touch-sensitive screen for a user interface for a thermostat comprising: first display areas for time of day set points; second display areas, corresponding to each of the first display areas, for occupant-present target temperatures; and third display areas, corresponding to each of the first display areas, for occupant-absent target temperatures.

[0016] A sixth aspect of the invention is directed to a thermostat comprising: a user interface; a controller coupled to the user interface and configured to provide a target temperature signal to a heater/cooler; a temperature sensor operably coupled to the controller. The controller comprises: time of day set points; occupant-present target temperatures for at least some of the time of day set points; and occupant-absent target temperatures for at least some of the time of day set points. The user interface comprises a display for displaying each of the time of day set points and the occupant-present and occupant-absent target temperatures associated therewith. An occupant presence detector is operably coupled to the controller to provide the controller with an occupant present/absent signal according to the perceived presence/absence of an occupant, whereby the target temperature signal depends on the target temperature corresponding to: (1) the time of day and (2) the present/absent signal.

[0017] A seventh aspect of the invention is directed to a user interface for a thermostat comprising: a touch-sensitive screen comprising a screen display with a plurality of screen areas. The screen areas comprise: a plurality of display areas for display of thermostat status information; and a plurality of touch-sensitive input areas for user input of thermostat inputs. All of the screen areas for thermostat status information and for thermostat inputs are single-function screen areas and are accessible on a single screen display.

[0018] An eighth aspect of the invention is directed to a thermostat comprising: a user interface; a controller coupled to the user interface and configured to provide a target temperature signal to a heater/cooler; and a temperature sensor operably coupled to the controller. The controller comprises: time of day set points; occupant-present target temperatures for at least some of the time of day set points; and occupant-absent target temperatures for at least some of the time of day set points. The user interface comprises a touch-sensitive screen, the touch-sensitive screen comprising: first display areas for displaying each of the time of day set points; second display areas, corresponding to each of the first display areas, for displaying each of the occupant-present target temperatures; and third display areas, corresponding to each of the first display areas, for displaying each of the occupant-absent target temperatures. All of the display areas are single-function display areas and are accessible on a single screen display. An occupant presence detector is operably coupled to the controller to provide the controller with an occupant present/absent signal according to the perceived presence/absence of an occupant. Whereby the target temperature signal depends on the target temperature corresponding to: (1) the time of day and (2) the present/absent signal.

BRIEF DESCRIPTION OF THE DRAWINGS

[0019] **FIG. 1** is a schematic illustration of a thermostat made according to the invention connected to a heater/cooler, the thermostat including a user interface coupled to a controller;

[0020] **FIG. 2** is a circuit diagram of an occupant presence detector usable all with the thermostats of **FIGS. 1 and 5**;

[0021] **FIG. 3** is a graph illustrating the general concept that a higher rate of change of temperature generally corresponds to a lower efficiency; and

[0022] **FIG. 4** is a simplified, generic version of test circuitry usable with the thermostat of **FIG. 1**;

[0023] **FIG. 5** is a front view of an alternative embodiment of the thermostat of **FIG. 1**;

[0024] **FIG. 6** is a partially exploded isometric view of the thermostat of **FIG. 5** with a portion separated to show wire connections and test buttons;

[0025] **FIGS. 7 and 8** are front views of the thermostat of **FIG. 5** shown in sleep and stealth modes;

[0026] **FIG. 9** shows a network of three of the thermostats of **FIG. 5** coupled to one another and to external temperature sensors and other remote modules; and

[0027] **FIG. 10** shows a network of three thermostats similar to that of **FIG. 9** connected to ductwork baffles for zoned heating and cooling.

DETAILED DESCRIPTION OF THE INVENTION

[0028] The following description of the invention will typically be with reference to specific structural embodiments and methods. It is to be understood that there is no intention to limit the invention to the specifically disclosed embodiments but that the invention may be practiced using other features, elements, methods and embodiments.

[0029] **FIG. 1** illustrates a thermostat **10** connected to a heater/cooler **12**. Heater/cooler **12** can include a heating system, a cooling system, or both a heating and cooling system. Heater/cooler **12** typically includes both heating and cooling units. Thermostat **10** may be used with, for example, one or more of gas or electric forced air furnaces, gas or electric radiant heating furnaces, electric forced air air-conditioning systems, and electric heat pumps. The invention may also be suitable for solar or solar electric heating/cooling systems used instead of or in addition to conventional heating and/or cooling systems.

[0030] Thermostat **10** includes a user interface **14** coupled to a CPU or controller **16**. User interface **14** includes a display **18** having a touch sensitive screen **20**. Thermostat **10** also includes, in this embodiment, a temperature sensor **22** and an occupant presence detector **24**, sometimes called a people sensor, connected to controller **16**. Optionally thermostat **10** may be coupled to one or more external temperature sensors **22**, an outside temperature sensor **26** and a remote control module **28**. The various components of thermostat **10** will now be discussed.

[0031] Touch sensitive screen **20** includes a number of display areas, a number of touch-sensitive input areas for the user input of information, and identifiers, typically words and/or symbols used to identify what is displayed in the associated display areas. Temporary identifier **30** is when it is desired to override the target temperature with an override temperature for the particular heating or cooling period. The target temperature is returned to during the next heating or cooling period.

[0032] Current target temperature display area **32** displays the current target temperature for thermostat **10**; display area **32** is identified by current target temperature identifier **34**. The current time is displayed at current time display area **36** with this location identified by time identifier **38**. The current temperature in the room or rooms or other area or areas being monitored is displayed at current temperature display area **40** next to current temperature identifier **42**. If more than one room or area is being monitored for temperature, each temperature may be simultaneously displayed or displayed in an alternating or rotating fashion; also, the display the temperature may be an average or median temperature as well.

[0033] In some situations that may be desirable to allow the user to reset or calibrate the temperature displayed at current temperature display area **40** so that the displayed temperature corresponds to, for example, a thermometer in the same room as thermostat **10**. Calibration identifier **43** indicates when this calibration function has been activated. In **FIG. 1** calibration identifier **43** indicates no calibration of the displayed temperature.

[0034] Below this upper row of display areas and identifier are four row-type display areas. The first is the time of day display area **48** for the user input of, in this embodiment, eight different times at which the temperature can be set as discussed below. Each time of day display area **48** is identified by a corresponding time of day identifier **50**. Each time (displayed at its display area **48**) associated with a time of day identifier **50** is set by first pressing on set identifier **44** and then using up and down set arrows **45** located above and below set identifier **44**. Below display areas **48** are the occupant present temperature display areas **52** displaying the target temperature for the particular time of day when the presence of an occupant is sensed. Occupant presence detector **24** is operably coupled to controller **16** to provide the controller with an occupant present/absent signal according to the perceived presence/absence of an occupant. Occupancy in an area is presumed when there are two occupant present determinations in a five-minute period. The occupant present status will then typically be maintained for a period of one hour following the last determination of occupancy. The occupant present temperature for each occupant present temperature display area **52** is input by first pressing on present identifier **46** and then using up and down arrows **47** located above and below present identifier **46**.

[0035] For example, in the disclosed embodiment of **FIG. 1** the first, second and third occupant present temperatures are all indicated to be 68° while the fourth target temperature display area **52** shows that the target temperature has been increased to 70°. In the example illustrated in **FIG. 1**, the target temperatures are for the heating mode. This indicates that from 6 a.m. through 10 a.m., assuming the presence of an occupant has been sensed, the occupant present target temperature remains at 68°. The transition from 10 a.m. to 12 p.m. (noon) can be handled in at least two ways. The simplest would be at 12 noon the target temperature will increase from 68° to 70° in a stepwise fashion. Alternatively, the transition from 68° to 70° can be a more gradual transition (typically an incremental steps) over, for example, the entire two hours from 10 a.m. to 12 p.m. or, for example, from 11:30 a.m. to 12 p.m. The drop in temperature between, in this example, 6 p.m. and 10 p.m. may also be stepwise at 10 p.m. or a more gradual drop in temperature a starting sometime before 10 p.m.

[0036] The third, occupant absent temperature display area **54** displays the target temperature corresponding to each time of day when controller **16** determines that an occupant is no longer present based upon the occupant present/absent signal from occupant presence detector **24** or from any external occupant presence detector **24**. As will be discussed below, this is typically based upon the failure to detect the presence of an occupant for a predetermined period of time or upon sensing that the occupant has left the premises and has not returned for a period of time. The occupant absent temperature for each occupant absent temperature display area **54** is input by first pressing on absent identifier **49** and then using up and down arrows **51** located above and below absent identifier **49**.

[0037] The target temperature displayed at display area **32** therefore depends on the target temperature corresponding to: (1) the time of day and (2) the present/absent signal.

[0038] Fan setting display area **56** is positioned directly below absent temperature display areas **54** and indicates whether the fan is to operate continuously during the chosen time period, the ON setting, or only when needed, the Auto setting. The status of the fan for each time of day identifier **50** is set by pressing fan identifier **53** and then pressing either on identifier **55** or auto identifier **57**. In the disclosed embodiment of **FIG. 1**, the fan has been set to auto so to operate only upon demand, that is during an active heating and/or cooling cycle, from 12 a.m. (midnight) through 6 p.m. but has been set to on to operate continuously from 6 p.m. to midnight. Another fan setting, called the Auto+Circulate setting, may be provided by which the fan is operated during heating or cooling cycles, as in the Auto setting, and also is periodically operated for a set for length of time, such as 10 minutes each hour regardless of the heating or cooling requirements. The length of time may be preset or may be chosen by the user, typically from a series or range of times, such as 5, 10 or 15 minutes every hour. Therefore, under the Auto+Circulate setting, even if the target temperatures are set so that the heater/cooler **12** does not ever turn on, the fan will still be operated for a portion of each period of time, such as 10 minutes per hour, to keep air circulating.

[0039] The next row has a hold temperature display area **58** next to a hold temperature identifier **60**. The hold temperature function is activated by pressing on hold identifier **60** and then using set arrows **45** to select the hold temperature. The hold temperature feature is typically used when the user is going to be absent for a period of time, such as while on vacation. When the hold temperature feature is active, thermostat **10** uses this relatively energy efficient temperature setting instead of the individual occupant present and occupant absent temperature settings. For example, in the winter a hold temperature may be 50° while in the summertime the hold temperature may be 85°.

[0040] Outside temperature display area **62** shows the current outdoor temperature as sensed by outdoor temperature sensor **26**. Display area **62** is identified by outside temperature identifier **64**. If outdoor temperature sensor **26** is used, the outdoor temperature will be displayed at outside temperature display area **62**. When thermostat **10** is used with both a furnace and an air-conditioning unit, and when outdoor temperature sensor **26** is used, the outdoor temperature can be used to automatically switch between heating and cooling functions. For example, controller **16** can be programmed so that if the outdoor temperature is 71° or above, COOL settings take precedence and the air-conditioning unit is operated. If the outdoor temperature 70° or below, HEAT settings take precedence and the furnace is operated.

[0041] A total filter hours display area **66** is next to a total filter hours identifier **68**. A remaining filter life display area **70** is used next to a remaining filter life identifier **72**. The total filter life hours for the filter being used is input into display area **66** when the filter is replaced or cleaned by pressing filter hours identifiers **68** and then using set arrows **45** to select the total filter hours, 250 in the example of **FIG. 1**. When the filter is cleaned or replaced, the filter hours and display areas **66** and **70** will be the same. The estimated life of the filter is, in this embodiment, reduced according to the period of time the fan is operated. The remaining estimated life of the filter is displayed at remaining filter life display area **70** in a count-down fashion. Computing and displaying the estimated remaining filter life continuously and conspicuously provides the user with an immediate estimate of when the filter should be replaced or cleaned.

[0042] A temperature swing display area **74**, located next to the temperature swing identifier **76**, indicates the chosen temperature swing. In this embodiment a 2 degree temperature swing has been chosen so that at the present time, 6:13 p.m., the occupant present target temperature of 72° will cause the furnace to cycle on when the room temperature drops to 70° and thereafter to cycle off when the room temperature increases to 74°. Temperature swing values of 0.5°, 1°, 1.5°, 2°, 2.5° or 3° would be typical. In some embodiments the user can select the temperature swing; to do so the user presses temperature swing identifier **76** and then uses set arrows **45** to select the temperature swing. The positive and negative temperature swings need not be the same, such as a −2° temperature swing to turn on heat and a +1° to turn off heat.

[0043] Program chosen display area **78** is next to program chosen identifier **80** and indicates which of preset temperature programs have been selected. In one embodiment program A uses the EPA recommended temperatures for ENERGY STAR certification for the occupant present temperature settings. One of the advantages of the present invention is that additional energy savings can be achieved through the use of the occupant absent temperature settings when using program A. In this embodiment program B is preset to occupant present temperature settings of 70° and occupant absent temperature settings of 62°; the temperature settings are intended to be used as a starting point for the user to raise or lower them as appropriate for the different time periods. Additional and/or different temperature programs may also be provided.

[0044] Six different status display areas **82** are found along the lower edge of touch sensitive screen **20**. When selected, the appropriate status word will come on or become prominent, such as by being illuminated, highlighted, underlined, blinking, boxed (as in **FIG. 1**) or otherwise. When selected, the mode word will come on (heat/cool etc).

Occupant Presence Detector Concept

[0045] Occupant presence detector **24** may include one or more detectors for sensing the presence or absence, or both, of an occupant in one or more rooms or other areas. For example, the occupant presence detector may include a passive infrared detector to sense movement of an occupant. If an occupant's movement has not been sensed within a predetermined time, such as 30 minutes, controller **16** can be programmed to assume that the space is no longer occupied so that the target temperature will change from the occupant present target temperature, shown at occupant present display areas **52**, to the occupant absent target temperature, shown at occupant absent display areas **54**. If desired, in may be useful to change the length of time from 30 minutes, in this example, to a much longer period of time during the nighttime or during some other time when the occupant is expected to be sleeping. Another type of occupant presence detector is an active infrared detector to sense use of an

infrared remote control device by an occupant. This would be particularly useful in rooms where such devices are commonly used when the room is occupied.

[0046] A further type of occupant presence detector includes an integrated sound detector to detect and process sound according to the amount, level and duration of the sound. This is accomplished by integrating the sound level over time. If the result is greater than a chosen threshold, occupant presence is assumed.

[0047] The occupant presence detector may also include an air pressure change detector to detect an air pressure change greater than a minimum air pressure change so to detect opening and/or closing of a door. In addition, the occupant presence detector may be external of the thermostat and include, for example, a user-actuated switch. For example, a switch may be located at or near a doorway so that an occupant can manually actuate a switch by hand when leaving or returning to a room. The switch may also be automatically actuated by, for example, the opening and/or closing of a door or by the occupant interrupting a light beam of a light beam switch upon exiting and entering a room. If more than one detector is used, the detectors external of thermostat **10** may be used in one or more rooms or other areas to be monitored.

[0048] An embodiment of the invention may use the occupant presence detector **24** illustrated in **FIG. 2**. Detector **24** includes a motion sensitivity portion **102**, a pressure sensitivity portion **104** and a sound sensitivity portion **106**. Motion sensitivity portion **102** comprises a passive infrared radiation (PIR) motion sensor **108** to sense heat in motion. LED's **110**, **112** blink red/green/red/etc. when, for example, a person walks within the area of a sensitivity of motion sensor **108**. Variable resistor **114** is user-settable to permit the user to set the motion sensitivity while monitoring LED's **110**, **112**. Portion **102** will provide an occupant present signal to CPU **16** when motion above a threshold minimum level has been sensed. CPU **16** will typically look for at least two detection cycles to indicate occupant presence.

[0049] Pressure sensitivity portion **104** is a very low frequency sound amplifier (under 1 Hz) used as an air pressure detector which detects when, for example, a door or window is opened or closed in a given area. Pressure sensitivity portion **104** uses a microphone **115** as the air pressure sensor. LED's **116**, **118** blink red/green/red/etc. as pressure in an area is changed from, for example, opening (+) and closing (−) a door or window. Variable resistor **119** is user-settable to permit the user to set the pressure sensitivity while monitoring LED's **116**, **118**. Pressure sensitivity portion **104** can be quite sensitive; in one embodiment if detector **24** is within about 25 feet (7.6 m), at maximum sensitivity, pressure sensitivity portion **104** can detect someone pushing on a closed door. Portion **104** will provide a change in occupancy signal to CPU **16** when a pressure change above a threshold minimum level has been sensed. CPU **16** will typically look for at least 2 detection cycles to indicate occupant presence.

[0050] Sound sensitivity portion **106** is a mid frequency sound detector with a capacitor-type sound integrator **107** across operational amplifier **122** for detecting voices and other sounds of people occupancy. Sound integrator **107** integrates sound level over time so to filter out transient noises and thus eliminate false positives. Sound integrator **107** also is primarily sensitive to voices and/or other sounds of people occupancy. In one embodiment the range of sensitivity is taken to include the following frequency range: 500 to 5000 Hz (voice). There is no output of operational amplifier **122** until there is enough sound to charge capacitor sound integrator **107** over a trigger level. Once enough sound is detected, the output of operational amplifier **122** will go up and stay up as long as there is detectable sound. In one embodiment when there is no sound for about 2 seconds, the output of resistor **120** will go down and discharge capacitor-type sound integrator **107**. This prevents single sound events from triggering the sound detector. A variable resistor **125** and a green LED **126** allows the user to set the sound sensitivity. A red LED **128** comes on when the sound has integrated to a detectable level. Portion **106** will provide an occupant present signal to CPU **16** when sound above a threshold minimum integrated sound level has been sensed. CPU **16** will typically look for one detection to indicate occupant presence. Portion **106** may also be used to indicate a change in occupancy.

[0051] Occupant presence detector **24** is typically a part of thermostat **10**. However, more than one occupant presence detector **24** can be used. For example, an occupant presence detector **24** may be incorporated as a part of thermostat **10** and an additional, external occupant presence detector may be used to monitor, for example, different parts of the same room or different rooms. The external occupant presence detector which may have the same or different modes of detection as the occupant presence detector incorporated as a part of thermostat **10**. In one embodiment an external occupant presence detector may be incorporated as a part of a light switch mounted to a wall of the building; such an occupant presence detector could be of a passive infrared detector type and be used to both automatically activate the switch, typically turning on lights, as well as provide an occupant present signal to controller **16**. While the signal transmission between the remote occupant presence detector may be hardwired, it is presently preferred to use a wireless signal. One preferred method is to use an RF signal using the ZigBee protocol. The ZigBee protocol can also be used for connecting controller **16** to other remote devices, such as outdoor temperature sensor **26**, heater/cooler **12**, any external temperature sensors **22** and any remote control modules **28**. In appropriate cases, a ZigBee repeater may be used to ensure a high-quality signal between the devices.

[0052] In some embodiments thermostat **10** may not include a clock but simply rely on sensing occupant presence or manual user input to control the temperature. In such embodiments remote control module **28** may be a clock-type remote control module **28** and may include, for example, a clock radio coupled to thermostat **10** through, for example, a ZigBee connection. Such a remote control module **28** may or may not include an occupant presence detector **24**. In this way such a clock-less thermostat **10** may operate on both the basis of sensing occupants and on the basis of the time of day using operational signals from a clock-type remote control module **28**.

Remotely Placeable Temperature Sensor Concept

[0053] Thermostat **10** may include not only a temperature sensor **22** in the user interface **14** but also a remotely placeable temperature sensor **22** could be placed in, for

example, the bedroom of a house. Thermostat **10** can then be programmed to use the temperature from the temperature sensor **22** in the bedroom at night while using the temperature from the temperature sensor **22** in the user interface **14** during the day. More than one remotely placeable temperature sensors **22** could also be used. Also, on a more remotely placeable temperature sensors **22** could be used instead of a temperature sensor **22** in the user interface **14**.

Thermostat Auto Mode Concept

[**0054**] One aspect of the invention allows thermostat **10** to be placed in an automatic mode (Auto Mode) to automatically switch between heating and cooling depending upon the target temperature in the heating mode, the target temperature in the cooling mode and the temperature in the room or other space being heated/cooled. This is done, unlike with conventional auto thermostats, without any limitation on the choice of the target temperatures for heating and cooling. Thermostat **10** is programmed so that when the temperature in the room goes below the lowest of the heating and cooling target temperatures by a first chosen amount, such as 3°, the system goes into the heating mode so that the furnace (or other heat source) is operated to heat the room. When the temperature in the room goes above the highest of the heating and cooling target temperatures by a second chosen amount, also typically 3°, the system goes into the cooling mode so that the air-conditioning unit (or other cooling source) operates to cool the room. Note that the first and second chosen amounts need not be the same. The first and second chosen amounts will typically be preprogrammed; however controller **16** can be programmed to allow them to be set or changed by a user. A thermostat using this Auto Mode Concept typically replaces the normal temperature swing with a small, one-sided swing equal to part of a degree, such as +0.4° from the target temperature during heating and −0.4° from the target temperature during cooling. The following three examples assume the first and second chosen amounts are each 3°.

[**0055**] For a first example, assume the heating target temperature is 72° and the cooling target temperature is 73°. When the temperature in the room goes below 69° the furnace is operated to heat the room until the room temperature reaches 72°. Assuming a one-sided swing of +0.4° for heating, the furnace is actuated when the temperature hits 69°, not 68.6°. The furnace turns off when the temperature reaches 72.4°. However, for simplicity in the following example the swing will be ignored. When the temperature in the room goes above 76°, the air-conditioning unit is operated to cool the room until the new room temperature reaches 73°.

[**0056**] For a second example, assume the heating target temperature is 70° and a cooling target temperature is 70°, when the temperature in the room goes below 67° the furnace is operated to heat the room until the room temperature reaches 70°. When they temperature in the room goes above 73°, the air-conditioning unit is operated to cool the room until the room temperature reaches 70°.

[**0057**] For a third (unlikely) example, assume the heating target temperature is 72° and the cooling target temperature is 66°, when the temperature in the room goes below 63° the furnace is operated to heat the room until the room temperature reaches 72°. When the temperature in the room goes above 75°, the air-conditioning unit is operated to cool the room until the room temperature reaches 66°.

[**0058**] For a fourth, more typical, example, assume the first and second amounts are 2°, the heating target temperature is 70° and the cooling target temperature is 78°, when the temperature in the room goes below 68° the furnace is operated to heat the room until the room temperature reaches 70°. When the temperature in the room goes above 80°, the air-conditioning unit is operated to cool the room until the room temperature reaches 78°.

[**0059**] Thermostat **10** can also be programmed so that, for example, if there is an unusually warm, sunny day during the winter, which would otherwise cause the thermostat to go into the cooling mode, the user can override the automatic function and keep the system in a heating mode. For example, one way this could be accomplished is to program the thermostat so that if the user quickly switches from the auto mode to the heating mode and back to the auto mode, the thermostat would be instructed to stay in the heating mode until reset or for the next 24 hours (or some other appropriate period of time). A dedicated switch or input area may also be provided for this function.

Thermostat Auto Mode with Setback Concept

[**0060**] This aspect of the invention combines the Auto Mode Concept with the occupant present and occupant absent concept discussed above. With the Auto Mode with Setback Concept, the thermostat determines the apparent presence or absence of an occupant, or other user, using one or more sensing devices and methods, such as those described above. The thermostat is then placed in the occupant present or occupant absent mode as is appropriate.

[**0061**] If thermostat **10** is in an occupant present mode, then the system will function as discussed above. That is, thermostat **10** is programmed so that when the temperature in the room goes below the lowest of the heating and cooling target temperatures by a first chosen amount, the system goes into the heating mode so that the furnace (or other heat source) is operated to heat the room. When the temperature in the room goes above the highest of the heating and cooling target temperatures by a second chosen amount, the system goes into the cooling mode so that the air-conditioning unit (or other cooling source) operates to cool the room.

[**0062**] If thermostat **10** is in the occupant absent mode, then a cool setback amount (such as 4°) is added to the cooling target temperature (such as 74°) and a heat setback amount (such as 8°) is subtracted from the heating target temperature (such as 70°) to arrive at a setback cooling target temperature (such as 78°) and a setback heating target temperature (such as 62°). Thermostat **10** is then placed in a heating mode when the sensed temperature is less than (or equal to) the setback heating target temperature. Thermostat **10** is then placed in a cooling mode when the sensed temperature is greater (or equal to) than the setback cooling target temperature. When an occupant is again sensed, thermostat **10** will return to operating in the occupant present mode.

[**0063**] For example, assume the cooling target temperatures and cool setback amount (74° and 4°) and the heating target temperatures and heat setback amount (70° and 8°) are as discussed above. Thermostat **10** operates to keep the room in a house, or other space, at the heating target temperature when occupants are present. Assume the occupants leave the house that night. Thermostat **10** may be programmed so that

one hour after the last detection of an occupant being present, the thermostat goes into an occupant absent mode. The heat setback amount is subtracted from the heating target temperature so that the heating unit will not turn on until the temperature in the room has dropped below 62°. Assuming it is a cold night and the temperature drops below 62°, the heating unit will come on to maintain the room at the setback heating target temperature, in this example 62°.

[0064] The next morning, the sun starts to heat the house and the room starts to heat up. When the room temperature, in this example, gets to 3° above the heating target temperature, that is above 73°, the thermostat transfers into a cooling mode. However, because no occupants have being detected, it stays in the occupant absent mode so that cooling will not begin until the temperature has reached 78°. As the sun begins to heat the house, the room temperature begins to increase. If it is a hot day and the room temperature reaches 78°, the cooling system will be actuated to maintain the setback cooling target temperature of 78°.

[0065] Assuming the system is still in an occupant absent mode because no occupants have been detected, as night falls the temperature drops in the room. When the temperature in the room gets to, in this example, 3° below the target cooling temperature, which is 71°, the thermostat transfers into a heating mode with 62° as the setback heating target temperature. Assume this night is not as cold as the prior night so that the room temperature only drops down to 65° before the morning when the room starts to again heat up from the outside. When in the Auto Mode with Setback, neither the heater nor the cooler is used when the room temperature is between, in this example, 62° and 78°. The temperature of the room rises and falls according to external heating and cooling when in such a range.

[0066] Whenever an occupant is a sensed, thermostat **10** returns to the occupant present mode so that the heating and cooling target temperatures of, in this example, 70° and 74° are once again used by the thermostat to control when to heat and when to cool the room.

Rate of Change of Temperature Concept

[0067] Another aspect of invention is the concept of using the rate of change of temperature to control which phase of a multiphase heater (for example, a single or 2 stage heat pump with an auxiliary electric heater or a two or three stage gas heater) would be used. The user could typically choose over a range of efficiencies from a low efficiency (quicker heating or quicker cooling) to a high efficiency (more gradual heating or more gradual cooling). The main reason for doing so is to increase efficiency consistent with acceptable levels of comfort. For example, in the South this feature might be used extensively using a high efficiency rate of change for heating while in the Midwest an intermediate efficiency rate of change for heating may be needed.

[0068] The graph at **FIG. 4** assumes an outside temperature of about 40° F. and a reasonably insulated house. Under these conditions, if a user with a two stage gas heater is happy with a 5° F. rate of rise, then setting the efficiency control at HIGH would save the user energy by not turning on the 2nd stage. Of course in warmer climates, the rate of rise could be much higher while not sacrificing higher efficiency.

[0069] If the heating efficiency setting is such that at least a 2nd stage comes on, we must assume the user wants the heat to come up faster so once the 2nd stage is on, it will bring the room temperature up all the way to target. From then on, the 1st stage should keep up. If not (like a heat pump in dead of winter), the rate of rise will be too slow or even negative so the 2nd stage will be turned on as soon as controller **16** sees the slow or negative rate of rise and if necessary, go to a third stage. The same function can be used for 2 stage cooling but using a rate of fall.

[0070] A user with just a single stage heat and/or cool would not be affected by the efficiency control setting of the thermostat. It is only effective with at least 2 stages or sources of heating or cooling. The thermostat will detect if at least a 2nd stage is connected before indicating or using multi stage functions.

Sequential Staging System Concept

[0071] The Rate of Change Temperature Concept discussed above is designed with an emphasis on maximum efficiency when using multiple stage heating and cooling systems. However, the Sequential Staging System Concept discussed below is based upon the following premise: at least some of the time it is desired to bring the temperature to the target temperature at a reasonably rapid rate with a minimal regard to efficiency. After the target temperature has been reached, then the temperature can be maintained in a fuel-efficient way. The Sequential Staging System Concept is particularly useful when the system uses a setback concept, such as the one discussed above, so that the distance between the setback temperature and the target temperature can be quite large, such as 8 or 10°. However, the Sequential Staging System Concept can also be used when a setback concept is not used or is not active so that the heating or cooling system must only heat or cool a conditioned air region a conventional temperature swing of, for example, 3°.

[0072] According to this aspect of the invention the heating systems can be connected to thermostat **10** using mode A (the most common), mode B or mode C. Mode D applies to single stage and dual stage cooling systems. In the following description W1, W2 and W3 refer to the wires for the first, second and third stages of heat while Y1 and Y2 referred to the wires for the first and second cooling stages.

[0073] The connections for this embodiment of this concept include the following:

[0074] W1, W2, W3, HEAT Y1, Y2 COOL

[0075] If you have a single stage of heat, connect just W1, if you have two stages of heat connect W1 and W2, if you have three stages of heat connect all three, which are W1, W2 and W3.

[0076] Mode A applies to the following heating systems. Mode A provides the advantage of quickly heating up the conditioned space for maximum comfort and then returning to efficient temperature maintenance.

[0077] 1 HEAT 1 stage heat pump, 1 stage electric furnace, 1 stage gas or oil furnace (W1 is 1st stage)

[0078] 2 HEAT 2 stage electric, gas, or oil furnace (W1 is 1st stage, W2 is 2nd stage)

[0079] 2 HEAT 2 stage heat pump (W1 is 1st stage pump, W2 is 2nd stage pump)

[0080] 2 HEAT 1 stage pump and 1 stage electric auxiliary (aux) (W1 is 1 stage pump, W2 is 1 stage electric aux)

[0081] 3 HEAT 3 stage electric, gas, or oil furnace (W1 is 1st stage, W2 is 2nd stage, W3 is 3rd stage)

[0082] 3 HEAT 2 stage pump and 1 stage electric aux (W1 is 1st stage pump, W2 is 2nd stage pump, W3 is 1 stage aux)

[0083] 3 HEAT 1 stage pump and 2 stage electric aux (W1 is 1 stage pump, W2 is 1st stage aux, W3 is 2nd stage aux)

[0084] When there are, for example, three heating stages, operating according to mode A proceed according to the following steps.

[0085] 1. The temperature of a conditioned air region is sentenced by temperature sensor **22**.

[0086] 2. The first stage of the multistage heating system is operated when a sensed temperature moves below a target temperature (for example 70°) by a first amount (for example 3°).

[0087] 3. Operation of the second stage begins after a first chosen time period (for example 1 minute) from the start of the first stage.

[0088] 4. Operation of the third stage is begun after a second chosen time period (for example 1 minute) from the start of the second stage so that all three stages are operational.

[0089] 5. If the target temperature is reached, operation of the first, second and third stages is halted.

[0090] 6. Thereafter the first stage is operated to maintain the conditioned air region within a second amount (for example 3°) of the target temperature.

[0091] 7. However, if the temperature within the conditioned air region moves below the target temperature by a third amount (for example 4°), then the first and second stages are operated to maintain the conditioned air region within a fourth amount (for example 3°) of the target temperature.

[0092] 8. Thereafter if the temperature within the conditioned air region moves below the target temperature by a fifth amount (for example 4°), then the control returns to step 4 above what all three stages again being operated.

[0093] Appropriate modifications can be made when there are more than three stages.

[0094] When there are only two heating stages of the types discussed above, mode A and mode D (two cooling stages) operate in substantially the same way according to the following steps.

[0095] 1. The temperature of a conditioned air region is determined by temperature sensor **22**.

[0096] 2. The operation of the first stage of the multistage air temperature control system is begun when a sensed temperature differs from a target temperature (for example 70° heating/78' cooling) by a first amount (for example 3°).

[0097] 3. The operation of the second stage of the multistage air temperature control system is begun after a chosen time period (for example 1 minute) from the start of the first stage so that both the first and second stages are operating to heat or cool the conditioned air region.

[0098] 4. The operation of the first and second stages is stopped if the target temperature is reached.

[0099] 5. Thereafter the first stage is operated to maintain the conditioned air region within a second amount (for example 3°) of the target temperature.

[0100] 6. However, if the temperature within the conditioned air region falls outside the target temperature by a third amount (4°), then control returns to step 3 so that both stages are again being operated

[0101] Mode B applies to the following heating system. Mode B is a specialized mode for this particular heating system. A specialized mode is used for this heating system because it is generally considered undesirable to have a heat pump and a fossil fuel furnace operating at the same time.

[0102] Two stage heat pump and 1 stage gas or oil aux heat (W1 is 1st stage pump, W2 is 2nd stage pump, W3 is aux).

[0103] Mode B operates according to the following steps to control the operation of the stages of a multistage heating system of the type including first, second and third stages, a heat pump comprising the first and second stages and an auxiliary heating source comprising the third stage.

[0104] 1. The temperature of a conditioned air region is determined by a temperature sensor **22**.

[0105] 2. The operation of the third stage of the multistage heating system is begun when the sensed temperature drops below a target temperature (for example 70°) by a first amount (for example 3°).

[0106] 3. The operation of the third stage is stopped if the target temperature is reached.

[0107] 4. Thereafter the first stage is operated to maintain the conditioned air region within a second amount (for example 3°) of the target temperature.

[0108] 5. If the temperature within the conditioned air region falls a third amount (for example 4°) below the target temperature, then the first and second stages are operated to maintain the conditioned air region within a fourth amount (for example 3°) of the target temperature.

[0109] 6. If the temperature within the conditioned air region falls a fifth amount (for example 4°) below the target temperature, then operation of the first and second stages is stopped and control is returned to step 2 so that the third stage begins operating.

[0110] Mode C applies to the following heating system. Mode C is a specialized mode for this particular heating system. A specialized mode is used for this heating system because as with Mode B heating systems, it is generally considered undesirable to have a heat pump and a fossil fuel furnace operating at the same time.

[0111] Single stage heat pump and dual stage gas or oil aux heat (W1 is 1 pump, W2 is 1st stage gas/oil, W3 is 2nd stage gas/oil).

[0112] Mode C operates according to the following steps to control the operation of the stages of a multistage heating system of the type including first, second and third stages, a heat pump comprising the first stage and an auxiliary heating source comprising the second and third stages.

[0113] The temperature of a conditioned air region is sensed by temperature sensor **22**.

[0114] The operation of the second and third stages of the multistage heating system is started when a sensed temperature drops below a target temperature (for example 70°) by a first amount (for example 3°).

[0115] The operation of the second and third stage is stopped if the target temperature is reached.

[0116] Thereafter the first stage is operated to maintain the conditioned air region within a second amount (for example 3°) of the target temperature.

[0117] If the temperature within the conditioned air region falls a third amount (for example 4°) below the target temperature, then operation of the first stage is stopped and the second stage is operated to maintain the conditioned air region within a fourth amount (for example 3°) of the target temperature.

[0118] If the temperature within the conditioned air region falls below the target temperature by a fifth (for example 4°) amount, then the second and third stages are operated together to maintain the conditioned air region within a sixth amount (for example 2°) of the target temperature.

[0119] It is believed that providing for Mode A will accommodate all single stage heating and cooling systems and most multistage heating systems and most dual stage cooling systems. It is therefore preferred that thermostat **10** include at least provisions for Mode A, which inherently provides for Mode D. Although not usually critical, is useful if thermostat **10** include provisions for Modes B and C.

[0120] According to this aspect of the invention, connecting multistage heat sources to thermostat **10** simply involves connecting the appropriate wire to the appropriate terminal. The appropriate selection and use of the various stages is handled by thermostat **10** in an efficient manner.

[0121] Comfort Selection Concept

[0122] When using multiple stage heating (or cooling) systems, it is possible to have different temperature swings for the different stages. In one example the first of stage operates under a first stage temperature swing while the second and any additional stages operate under a second stage of temperature swing. In addition, the temperature swings can be selected to be different according to the comfort level desired. Typically a smaller temperature swing is considered less efficient because the heater (cooler) will cycle on and off more frequently than a larger temperature swing. However, in milder climates a smaller temperature swing may be able to be used without an unacceptable decrease in efficiency. This concept is applicable if the first stage stays on when the second stage comes on or if the first stage turns off when the second stage comes on. This concept is also applicable with systems having more than two stages.

[0123] The following example illustrates three temperature swing levels identified as a Comfort, Normal and Economy. At the Comfort temperature swing level, the first stage will keep the temperature+/−0.33 if it can. If the first stage cannot maintain the temperature within that swing range, the second stage will become operational when the temperature drops the 1°.

Level	First Stage Temperature Swing	Second Stage Temperature Swing
Comfort:	.33° swing	1°
Normal:	.66° swing	2°
Economy:	1.0° swing	3°

Self-Testing Back Plate Concept

[0124] **FIG. 4** is a simplified, generic version of test circuitry that can be used with thermostat **10**. The basic concept is to disconnect the load(s) (such as HVAC control relays associated with heater/cooler **12**) from a controller, such as controller **16**. This is typically accomplished by first opening or removing the back plate containing the test circuitry. Two simple tests, discussed below, are accomplished to determine if a perceived problem is a problem with the controller or with the load. The first step uses wiring test circuitry **84**, including a current-limiting resistor **86**, an LED **88** and a diode **90** for each load, and a wiring test button **92**. Closing wiring test button **92** causes each LED **88** connected to its associated load to illuminate only if the load is properly connected to power source **94**. If an LED **88** does not illuminate, there is a problem with the connection of power source **94** to its associated load. Therefore, this test shows that the load is getting power from power source **94**. (The current-limiting resistor **86** sufficiently large to limit the amount of current supplied to the load to prevent actuation of the load during this first test.) Assuming the load is getting power from power source **94**, the user proceeds to the second test. The second test is accomplished by actuating the function test switch/button **96**, **98** of a second, test function circuit to "turn on" the load by connecting the load to power source **94**; if the load does not operate as expected, the problem is with the load, not controller **16**, because the load is properly connected to power source **94**. If the load does operate as expected, then the perceived problem is with controller **16**. This test circuitry can be particularly useful for troubleshooting a perceived problem with controller **16** during a telephone service call.

Alternative Thermostat Embodiment

[0125] **FIG. 5** illustrates the front view of an alternative embodiment of thermostat **10** of **FIG. 1** with like reference numerals referring to like elements. It will be seen that this embodiment includes various features and concepts discussed above as well as new features and concepts. Thermostat **10** includes a user interface **14** within a housing **140**. User interface **14** includes an LCD display area **142** surrounded by various touch sensitive, backlit input areas. Input areas include a home area **144**, a mode area **146**, a set area **148**, a fan area **150**, a ZigBee area **152**, a setup (or configuration) area **154**, an alert area **156**, and an adjustment area

158. Four backlit areas are used to identify the active status of the system, that is whether it is in a heat mode indicator **160**, auxiliary mode indicator **162**, cool mode indicator **164** and whether or not the fan is operational at fan indicator **166**.

[**0126**] The embodiment of **FIG. 5** preferably includes the occupant presence detector **24** of **FIG. 2** with PIR motion detector **108** located at user interface **14** above home and mode areas **144**, **146**. The embodiment of **FIG. 5** also preferably operates using the Thermostat Auto Mode with Setback Concept discussed above; the use of this concept in conjunction with using multiple thermostats **10** will be discussed below. The Self-Testing Back Plate Concept of **FIG. 4** is used with the following variations. Test buttons **92** are not used. Also, pressing test buttons **98** not only illuminates a special, in this embodiment yellow, LED **88** adjacent to the corresponding indicator **160-166**, it also activates the corresponding heater/cooler function and illuminates the corresponding indicator **160-166** with its corresponding color (orange, red, blue, green).

[**0127**] Adjustment area **158** is used to raise or lower temperatures, as well as for other purposes. Adjustment area **158** includes a slider area **168** that is sensitive to the movement of the user's fingertip, or a stylus, up or down area **168**. Adjustment area **158** also includes up area **170** and down area **172** to permit incremental, single digit changes by momentary contact with areas **170**, **172**. Continuous contact with areas **170**, **172** for more than a chosen period, such as two seconds, causes the value to be continuously incrementally changed.

[**0128**] Display area **142** is shown in a typical display mode illustrating the time in time area **174**, the day of the week at day area **176**, the target temperature at target temperature area **178**, the present temperature at temperature display area **180** and the operating mode, such as heat or cool, at operating mode area **182**. Area **142** is capable of displaying other information during, for example, set up procedures.

[**0129**] Home area **144** is used to return interface **14** to a home state, such as shown in **FIG. 5**. ZigBee area **152** is used primarily when setting up the system according to the ZigBee wireless communication protocol. Further information on the ZigBee wireless communication protocol can be found at www.zigbee.org.

[**0130**] Set area **148** is used to set the heat and cool temperature setback amounts, set the life, such as 30 weeks, for the air filter, set the life for a humidity pad when a humidifier is used, set the humidification level when a humidifier is used, set the humidification level when a dehumidifier is used, and set the life for a UV lamp when a UV sanitizing system is used. In addition, the temperature swing may be changed from any factory-set swing, such as 0.75°. If heater/cooler **12** is cycling more often than is desired, the user can increase the swing to, for example, 1.5°. Therefore, if the target temperature for heating is 70°, the heater may turn on when the temperature goes below 68.5° and turn off when the temperature goes above 71.5°.

[**0131**] Mode area **146** is used to place thermostat **10** into or remove the thermostat from the Auto Mode with Setback state. Removing thermostat **10** from the Auto Mode with Setback state places the thermostat into the Auto Mode state, discussed above, so that information regarding the presence or absence of an occupant is ignored.

[**0132**] Fan area **150** is used to place the fan in an On mode, during which the fan operates continuously, an Auto mode, during which the fan operates only when the heater/cooler **12** is operating, or an Auto+Circulate mode. In the Auto+Circulate mode the fan is operated during heating or cooling cycles, as in the Auto mode, and also is periodically operated for a minimum set for length of time, such as 10 minutes each hour, regardless of the heating or cooling requirements. The length of time may be preset or may be chosen by the user, typically from a series or range of times, such as 5, 10 or 15 minutes every hour.

[**0133**] Setup area **154** is used when thermostat **10** is initially connected to single and multiple stage heating and cooling systems. Instructions are given on display area **142** on how to connect the appropriate wires to the thermostat wire connections **185**, shown in **FIG. 6**, according to the Sequential Staging System Concept discussed above. In addition, if an outdoor temperature sensor **26** is used, the user has the option of disabling any heat pump when the outdoor temperature is less than, for example, 40°. Also, when an outdoor temperature sensor **26** is used, thermostat **10** can accommodate an air-conditioning system having an external vent so that when the outside temperature is less than, for example, 65°, but the conditioned region needs to be cooled, the system can cool the conditioned region using outside air instead of running the compressor. Also, depending on the type of heating units, the user can select to have the thermostat control the fan (typical with electric heaters) or have the heater control the fan (typical with fossil fuel furnaces).

[**0134**] Set up area **154** is also used to determine what the user interface **14** will look like during periods of inactivity. **FIG. 7** illustrates user interface **14** in what is called a sleep mode. The different areas and shown in **FIG. 5** are typically illuminated using colored backlighting LED's. To produce the low visual impact sleep mode of **FIG. 7**, the colored LED's are turned off. However, display area **142** continues to display the temperature, etc. **FIG. 8** illustrates user interface **14** in what is called a stealth mode. In this case display area **142** is also blank. The exception in both a sleep mode and the stealth mode is that if the heater is running, heat mode indicator **160** is illuminated. Touching user interface **14** when thermostat **10** is in either the sleep mode or the stealth mode causes the backlighting LED's to illuminate at partial brightness, for example 25%. Thereafter touching any particular area causes that particular function to be illuminated at full brightness.

[**0135**] Another feature of set up area **154** is that it permits the user to calibrate the temperature display to match, for example, the temperature reading of a thermometer in the same room. Assume, for example, temperature display area **180** displays a current temperature of 80°. Assume also that the user would like the display temperature to read 78°. This can be accomplished with set up area **154**. Setup area **154** also allows the user to indicate whether or not a humidifier is used and whether or not a dehumidifier is used.

[**0136**] Alert area **156** is illuminated when thermostat **10** senses an alert status. Typical alerts include Low Battery when the battery should be replaced; Check Heater when the heater is activated but the room temperature drops, for example, 4° from the heat target temperature within, for example, 30 minutes; Check A/C when the cooler is acti-

vated but the room temperature increases, for example, 4° from the cool target temperature within, for example, 30 minutes. Other alerts include Check UV Lamp, Check Filter, Check Hum (Humidity) Pad, Check Alarm (when thermostat **10** is connected to an alarm system), and Check Water Timer (when thermostat **10** is connected to the water timer of an irrigation system). In addition, a ZigBee ID Conflict alert they be issued when a problem is sensed in the operation of the ZigBee wireless communication system.

Networked Thermostat Concept

[**0137**] Thermostat **10** of **FIG. 5** can be used as a single unit or can be one of a network in a, for example, ZigBee mesh. More than one network can be on a ZigBee mesh like an upstairs HVAC network and a separate downstairs HVAC network. As discussed below, a network can also have zoned areas with ZigBee controlled baffles installed.

[**0138**] **FIG. 9** is an example of a network of first and second and third thermostats **10** coupled together through ZigBee links **184**, links **184** indicated in **FIG. 9** as dashed lines. Each thermostat, in this embodiment, includes an occupant presence detector **24** of **FIG. 2** to sense motion, pressure changes and sound; such detectors are also called people sensors. Each thermostat is also coupled to outdoor temperature sensor **26**. First thermostat **10** is located in a hall and is coupled to a light switch people sensor **186** and an external temperature sensor **188**. Second thermostat **10** is located in a bedroom and is coupled to a clock radio timer **190** and an external people sensor **192** located in a bathroom. Third thermostat **10** is located in a living area and is coupled to people sensors **194**, **196** in a kitchen and in a dining room. Only first thermostat **10** is hardwired to the heater/cooler **12**, identified as HVAC in **FIG. 9**. All thermostats **10** communicate with each other and the wired first thermostat **10** as required. The desired target temperature depends on occupancy of each separate area and the temperature settings of the associated thermostat **10**.

[**0139**] Occupancy in an area is, in this embodiment, determined by at least 2 occupant present indications within 5 minutes from one or more occupant presents detectors (people sensors). If more than one area detects occupancy at the same time, the average of the target temperatures for each of the thermostats in the occupied areas will be used as the target temperature or for all of the areas; the average target temperature will be compared with the average of temperatures in the occupied areas. Target temperatures may be based on a value other than an average, such as a weighted average or a mean temperature. Also, the computation of the target temperature may change according to, for example, the time of day so that a bedroom target temperature may be given more weight at night than during the day.

[**0140**] For example, assume occupancy is detected in the region of the hall, the target temperature for the first thermostat set at 70°, and the sensed temperature being 71° so that the heat is not on. The bedroom detected no occupancy, the target temperature for the second thermostat is 72°, the sensed temperature is 69°; with no occupancy second thermostat **10** is in the setback mode so that the heat will not come on (that is heater/cooler **12** will not be used to heat the structure). However, if both areas become occupied, the target temperatures will be averaged so that the new target temperature is 71°. The average room temperature is 70° so that the heat will come on for the structure.

[**0141**] If there is no detection from any people sensor within 1 hour, the target temperature will be set back. The set back target temperature will be the set back target temperature of the thermostat that last detected occupancy. For example, assume the bedroom (second thermostat **10**) detected occupancy last. When occupancy anywhere in the house is not detected for 1 hour, the heating setback amount for second thermostat **10** (−10°) will be used to create a setback heating target temperature of 62°.

[**0142**] Any of the first, second and third thermostats can be used to input settings for all the thermostats. All settings and changes to settings (except room temperature, heating and cooling target temperatures, and heating and cooling set back temperatures) on any thermostat will be implemented on all thermostats in the system via ZigBee communications. In this embodiment every thermostat **10** in the system is an equal. There is no master or controller thermostat. Each of the first, second and third thermostats **10** preferably have the necessary relays and other components so any thermostat can be wired to an HVAC system. Also, when any thermostat is in the heat mode, all thermostats will be in the heat mode.

[**0143**] **FIG. 10** illustrates a network of first, second and third thermostats similar to the network of **FIG. 9** with the following exception. Heater/cooler **12** includes a system of ductwork baffles including an upstairs baffle **198**, a master bedroom baffle **199** and a downstairs baffle **200**. Assume the following example. Occupancy in the master bedroom area is detected so that the master bedroom area requires heat. Second thermostat **10** sends a ZigBee command for heat to all the thermostats (first and third thermostats **10** in this example) on the network including the wired first thermostat **10**. Second thermostat **10** also sends a command to open master bedroom baffle **199**. Once the heating is finished, second thermostat **10** sends a signal to heater/cooler **12** to stop heating and closes baffle **199**. If more than one room has occupancy, the average of each room's target temperature and room temperature will be used and heating will be decided on the basis of those averages. If, for example, first and second thermostats **10** both indicate that heating is needed, both upstairs baffle **198** and master bedroom baffle **199** will be opened during heating. Cooling follows a similar pattern. If one thermostat **10** requests heat and another thermostat **10** requests cooling at the same time, in one embodiment the area that requires heat takes priority. In this example each of the thermostats is shown controlling a single baffle. However, a thermostat can control more than one baffle. Also, the airflow to some regions may not be controlled by a baffle. The energy to power each baffle may be supplied by a hardwired connection, by batteries or by rechargeable batteries using, for example, the airflow through the air duct to power a miniature wind turbine.

[**0144**] An advantage of the networked baffle-type zoned system of **FIG. 10** is that it does not require a separate controller wired to its associated baffle. This makes the installation much less expensive and facilitates retrofit installations.

[**0145**] One of the primary advantages of the embodiment of **FIG. 5** is that it is not simply a thermostat but also incorporates an occupant presence detector (people sensor). A user can purchase a single thermostat and have an operational occupancy sensing thermostat. In addition, the same thermostat can be purchased along with external people

sensors and other auxiliary devices, as exemplified by devices **186-196**, for further functionality. In a retrofit installation, the existing thermostat connected to the heater/cooler is replaced and hardwired to a thermostat **10** made according to the invention, such as the embodiment of **FIG. 5**. Additional thermostats **10**, along with external people sensors and other auxiliary devices, can be used without requiring any extensive wiring because of the use of wireless interconnections among the components.

[**0146**] Other modification and variation can be made to the disclosed embodiments without departing from the subject of the invention as defined in following claims.

[**0147**] Any and all patents, patent applications, and printed publications referred to above are incorporated by reference.

1. A method for automatically switching between heating and cooling modes of a thermostat, comprising:

setting a heating target temperature;

setting a cooling target temperature;

sensing the temperature within a conditioned region;

placing the thermostat in a heating mode when the sensed temperature is less than the lowest of the heating and cooling target temperatures by a first amount; and

placing the thermostat in a cooling mode when the sensed temperature is greater than the highest of the heating and cooling target temperatures by a second amount.

2. A method for automatically switching between heating and cooling modes of a thermostat, comprising:

setting a heating target temperature;

setting a cooling target temperature;

sensing the temperature within a conditioned region;

determining the apparent presence or absence of a user;

placing the thermostat in a user present mode or a user absent mode based upon the result of the determining step;

if the thermostat is in a user present mode, then:

place the thermostat in a heating mode when the sensed temperature is less than the lowest of the heating and cooling target temperatures by a first amount; and

place the thermostat in a cooling mode when the sensed temperature is greater than the highest of the heating and cooling target temperatures by a second amount; and

if the thermostat is in a user absent mode, then:

add the cool setback amount to the cooling target temperature and subtract the heat setback amount from the heating target temperature to arrive at setback cooling and setback heating target temperatures, respectively;

place the thermostat in a heating mode when the sensed temperature is less than the setback heating target temperature; and

place the thermostat in a cooling mode when the sensed temperature is greater than the setback cooling target temperature.

3. The method according to claim 2 wherein the determining step comprises at least one of:

detecting use of an infrared remote control device;

determining a sound energy level by integrating sound level over time;

detecting an air pressure change greater than a minimum air pressure change; and

monitoring a user-actuated switch.

4. The method according to claim 2 wherein the determining step is carried out by:

sensing motion within a monitored region and providing an occupant present signal to a thermostat controller when motion above a threshold minimum level has been sensed;

detecting air pressure changes and providing a change in occupancy signal to the controller when an air pressure change above a threshold minimum level has been sensed; and

monitoring sound level and integrating the monitored sound level over time and providing an occupant present signal to the controller when sound above a threshold minimum integrated sound level has been sensed.

5. A method for automatically switching between heating and cooling modes of a thermostat, the thermostat comprising a thermostat controller, the method comprising:

setting a heating target temperature;

setting a cooling target temperature;

sensing the temperature within a conditioned region;

determining the apparent presence or absence of a user, the determining step being carried out using each of the following:

sensing motion within a monitored region and providing an occupant present signal to the thermostat controller when motion above a threshold minimum level has been sensed;

detecting air pressure changes and providing a change in occupancy signal to the controller when an air pressure change above a threshold minimum level has been sensed; and

monitoring sound level and integrating the monitored sound level over time and providing an occupant present signal to the controller when sound above a threshold minimum integrated sound level has been sensed; and

placing the thermostat in a user present mode or a user absent mode based upon any one of the motion sensing, air pressure detecting or sound level monitoring steps.

6. The method according to claim 5 wherein the air pressure change detecting step is carried out using a sound sensor constructed to detect sounds having a frequency of less than 1 Hz.

7. The method according to claim 5 wherein the sound level monitoring step is carried out to integrate sounds within the 500-5000 Hz frequency range.

8. A thermostat comprising:

a user interface;

a controller coupled to the user interface and configured to provide a target temperature signal to a heater/cooler;

a temperature sensor operably coupled to the controller; and

an occupant presence detector operably coupled to the controller to provide the controller with an occupant present/absent signal according to the perceived presence/absence of an occupant, the occupant presence detector comprising:

a motion sensor constructed to provide an occupant present signal to the controller when motion above a threshold minimum level has been sensed;

an air pressure change detector constructed to provide a change in occupancy signal to the controller when an air pressure change above a threshold minimum level has been sensed; and

an integrating sound level sensor constructed to integrate sensed sound level over time and provide an occupant present signal to the controller when sound above a threshold minimum integrated sound level has been sensed.

9. The thermostat according to claim 8 wherein the air pressure change detector comprises a sound sensor constructed to detect sounds having a frequency of less than 1 Hz.

10. The thermostat according to claim 8 wherein the integrating sound level sensor is constructed to integrate sounds within the 500-5000 Hz frequency range.

11. A touch-sensitive screen for a user interface for a thermostat comprising:

first display areas for time of day set points;

second display areas, corresponding to each of the first display areas, for occupant-present target temperatures; and

third display areas, corresponding to each of the first display areas, for occupant-absent target temperatures.

12. A touch-sensitive screen according to claim 11 comprising at least four of the first display areas.

13. A touch-sensitive screen according to claim 11 further comprising fourth display areas, corresponding to each of the first display areas, for fan settings.

14. A touch-sensitive screen according to claim 11 wherein the time of day set points are user-settable.

15. A touch-sensitive screen according to claim 14 wherein the time of day set points are user-settable in at most 15-minute increments.

16. A touch-sensitive screen according to claim 11 wherein both of the occupant-present and occupant-absent target temperatures are user-settable.

17. A touch-sensitive screen according to claim 11 further comprising:

first touch-sensitive input areas on the screen for user input of the time of day set points;

second touch-sensitive input areas on the screen for user input of the occupant-present target temperatures; and

third touch-sensitive input areas on the screen for user input of the occupant-absent target temperatures.

18. A touch-sensitive screen according to claim 11 further comprising a filter life display area, for displaying information corresponding to the projected life of a filter, and elapsed filter life display, for displaying information corresponding to the remaining projected life of the filter.

19. A touch-sensitive screen according to claim 11 further comprising a current target temperature display area and a current temperature display area.

20. A thermostat comprising:

a user interface;

a controller coupled to the user interface and configured to provide a target temperature signal to a heater/cooler;

a temperature sensor operably coupled to the controller;

the controller comprising:

time of day set points;

occupant-present target temperatures for at least some of the time of day set points; and

occupant-absent target temperatures for at least some of the time of day set points;

the user interface comprising a display for displaying each of the time of day set points and the occupant-present and occupant-absent target temperatures associated therewith; and

an occupant presence detector operably coupled to the controller to provide the controller with an occupant present/absent signal according to the perceived presence/absence of an occupant, whereby the target temperature signal depends on the target temperature corresponding to: (1) the time of day and (2) the present/absent signal.

21. A thermostat according to claim 20 wherein at least one of (1) the time of day set points, (2) the occupant-present target temperatures, and (3) the occupant-absent target temperatures, are user selected.

22. A thermostat according to claim 20 wherein the temperature sensor is spaced-apart from the display and is coupled to the controller through a wireless connection.

23. A thermostat according to claim 20 wherein the user interface comprises a wireless remote control module positionable spaced apart from the display.

24. A thermostat according to claim 23 wherein the wireless remote control module comprises said temperature sensor.

25. A thermostat according to claim 20 wherein the occupant presence detector comprises an active infrared detector to sense use of an infrared remote control device.

26. A thermostat according to claim 20 wherein the occupant presence detector comprises an integrated sound detector to detect and process sound according to the amount, level and duration of the sound.

27. A thermostat according to claim 20 wherein the occupant presence detector comprises an air pressure change detector to detect an air pressure change greater than a minimum air pressure change so to detect opening and/or closing of a door.

28. A thermostat according to claim 20 wherein the occupant presence detector comprises a user-actuated switch, the switch being actuated by hand.

29. A thermostat according to claim 28 wherein the switch is sensitive to the opening and/or closing of a door.

30. A thermostat according to claim 28 wherein the switch comprises a light beam switch actuated when a light beam is interrupted.

31. A thermostat according to claim 20 further comprising an outdoor temperature sensor operably coupled to the controller.

32. A user interface for a thermostat comprising:

a touch-sensitive screen comprising a screen display with a plurality of screen areas, the screen areas comprising:

a plurality of display areas for display of thermostat status information; and

a plurality of touch-sensitive input areas for user input of thermostat inputs; and

all of the screen areas for thermostat status information and for thermostat inputs being single-function screen areas and being accessible on a single screen display.

33. A user interface according to claim 32 wherein the display areas comprise:

a first display area for each of a plurality of time of day set points;

a second display area, for each of a plurality of first target temperatures, corresponding to at least some of the first display areas;

a current target temperature display area; and

a current temperature display area.

34. A user interface according to claim 33 wherein:

the first target temperatures are occupant-present target temperatures; and

the display areas comprise third display areas, for each of a plurality of second, occupant-absent target temperatures, corresponding to at least some of the first display areas.

35. A thermostat comprising:

a user interface;

a controller coupled to the user interface and configured to provide a target temperature signal to a heater/cooler;

a temperature sensor operably coupled to the controller;

the controller comprising:

time of day set points;

occupant-present target temperatures for at least some of the time of day set points; and

occupant-absent target temperatures for at least some of the time of day set points;

the user interface comprising a touch-sensitive screen, the touch-sensitive screen comprising:

first display areas for displaying each of the time of day set points;

second display areas, corresponding to each of the first display areas, for displaying each of the occupant-present target temperatures; and

third display areas, corresponding to each of the first display areas, for displaying each of the occupant-absent target temperatures;

all of the display areas being single-function display areas and being accessible on a single screen display; and

an occupant presence detector operably coupled to the controller to provide the controller with an occupant present/absent signal according to the perceived presence/absence of an occupant, whereby the target temperature signal depends on the target temperature corresponding to: (1) the time of day and (2) the present/absent signal.

* * * * *