US 20060071089A1

(19) United States

(12) Patent Application Publication

(10) Pub. No.: US 2006/0071089 A1

(43) Pub. Date: Apr. 6, 2006

Kates

(54) ZONE THERMOSTAT FOR ZONE HEATING AND COOLING

(76) Inventor: **Lawrence Kates**, Corona Del Mar, CA (US)

Correspondence Address:
KNOBBE MARTENS OLSON & BEAR LLP
2040 MAIN STREET
FOURTEENTH FLOOR
IRVINE, CA 92614 (US)

(21) Appl. No.: **10/959,494**

(22) Filed: **Oct. 6, 2004**

Publication Classification

(51) **Int. Cl.**

G05D	***23/00***	(2006.01)
F24F	***11/00***	(2006.01)
F24F	***13/06***	(2006.01)

(52) **U.S. Cl.** **236/94**; 454/256

(57) **ABSTRACT**

A zone thermostat for use in connection with an Electronically-Controlled Register vent (ECRV) that can be easily installed by a homeowner or general handyman is disclosed. The ECRV can be used to convert a non-zoned HVAC system into a zoned system. The ECRV can also be used in connection with a conventional zoned HVAC system to provide additional control and additional zones not provided by the conventional zoned HVAC system. In one embodiment, the ECRV is configured have a size and form-factor that conforms to a standard manually-controlled register vent. In one embodiment, the zone thermostat is configured to provide thermostat information to the ECRV. In one embodiment, the zone thermostat communicates with a central monitoring system that coordinates operation of the heating and cooling zones.

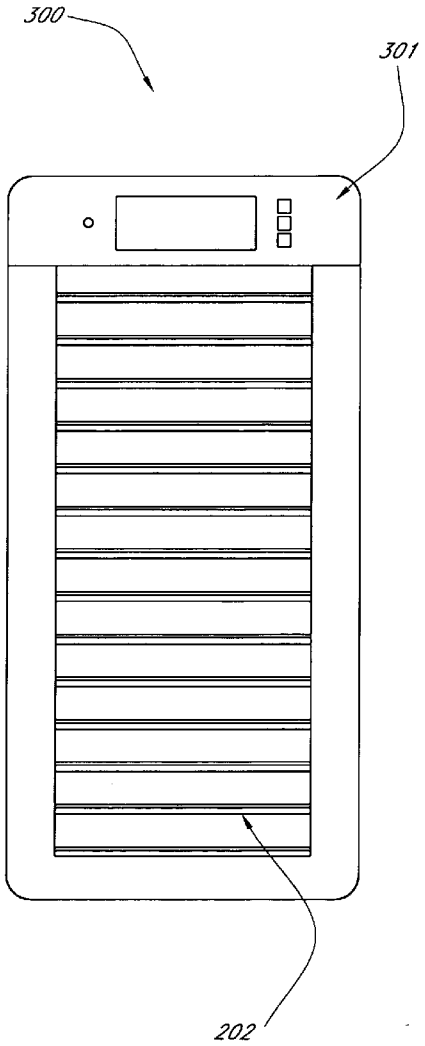

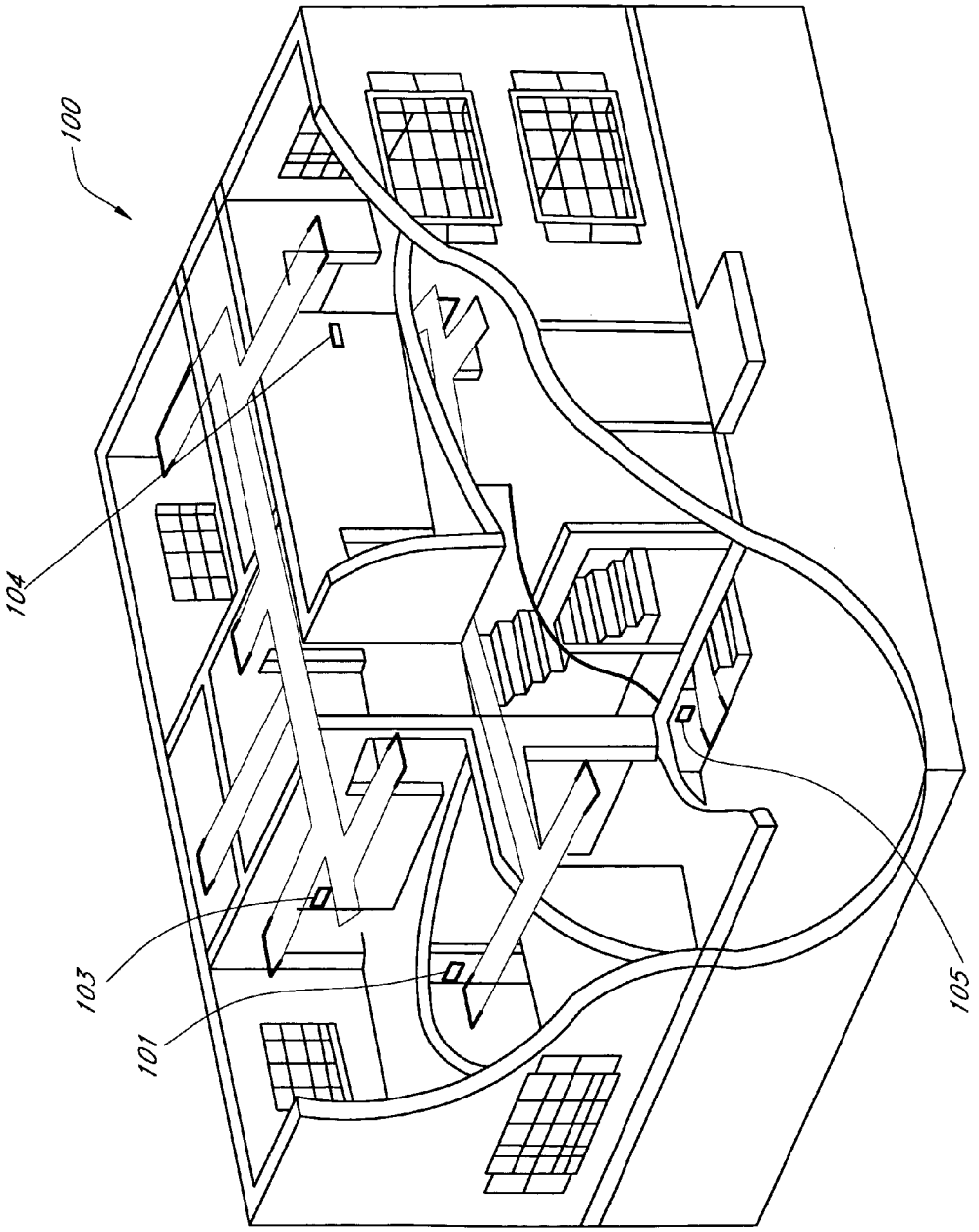

FIG. 1

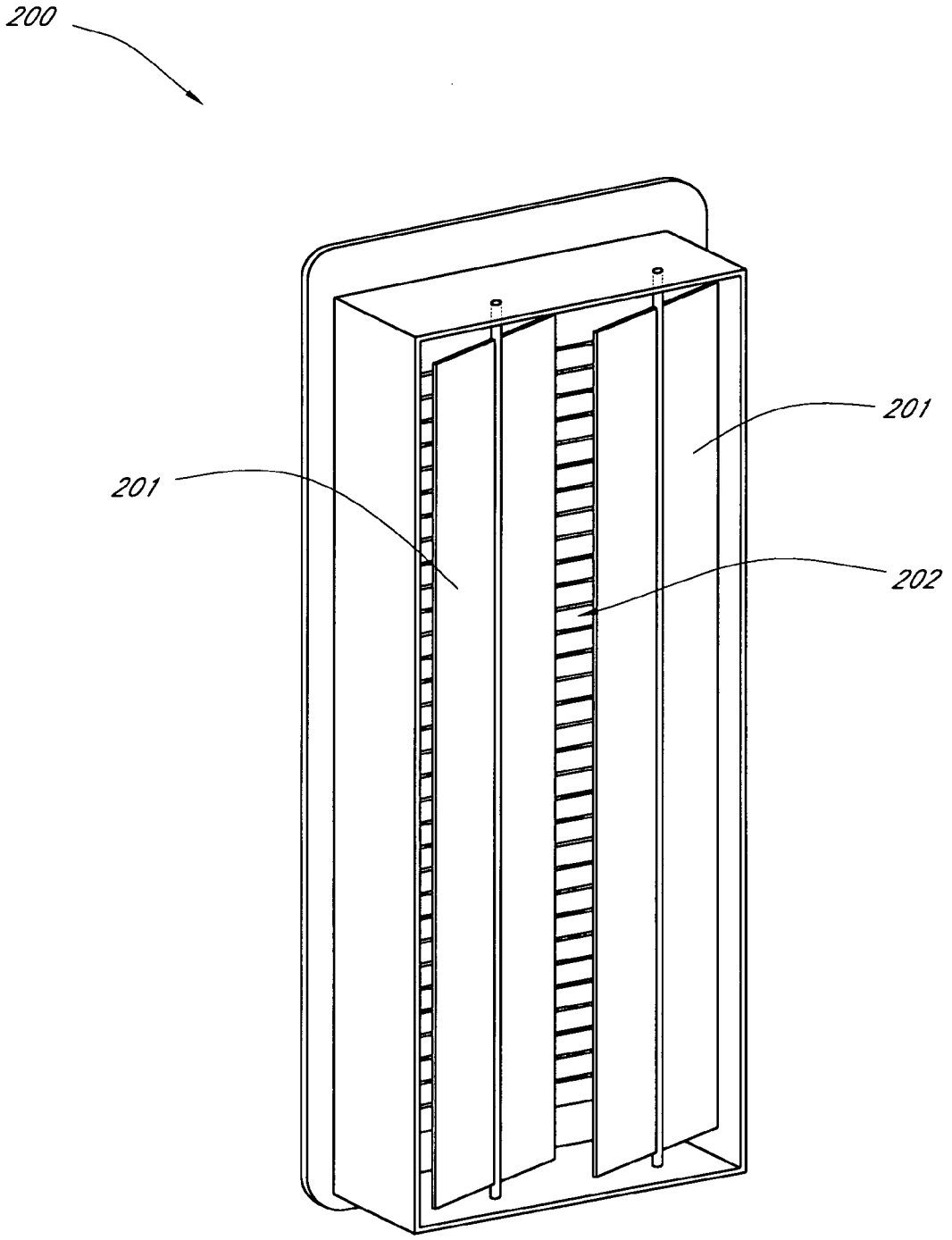

FIG. 2 (PRIOR ART)

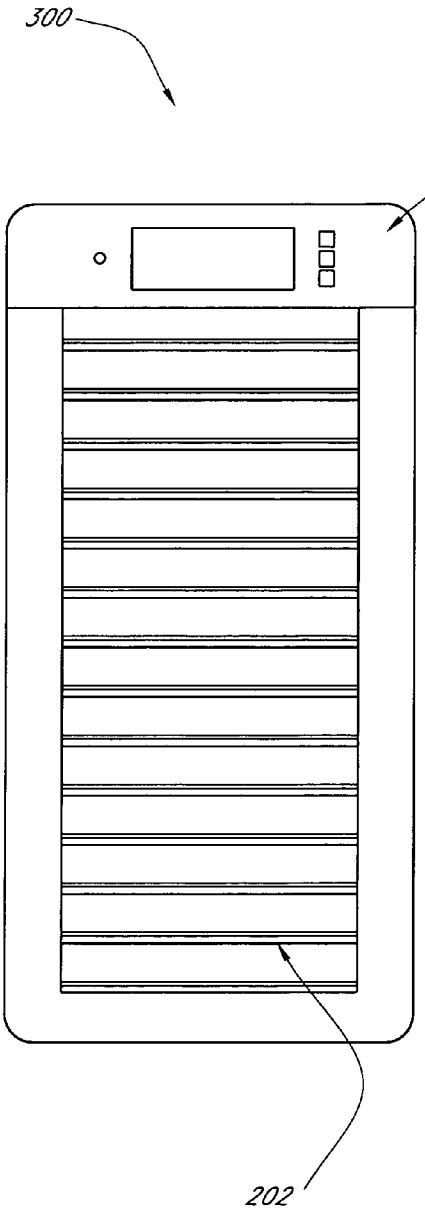

FIG. 3A

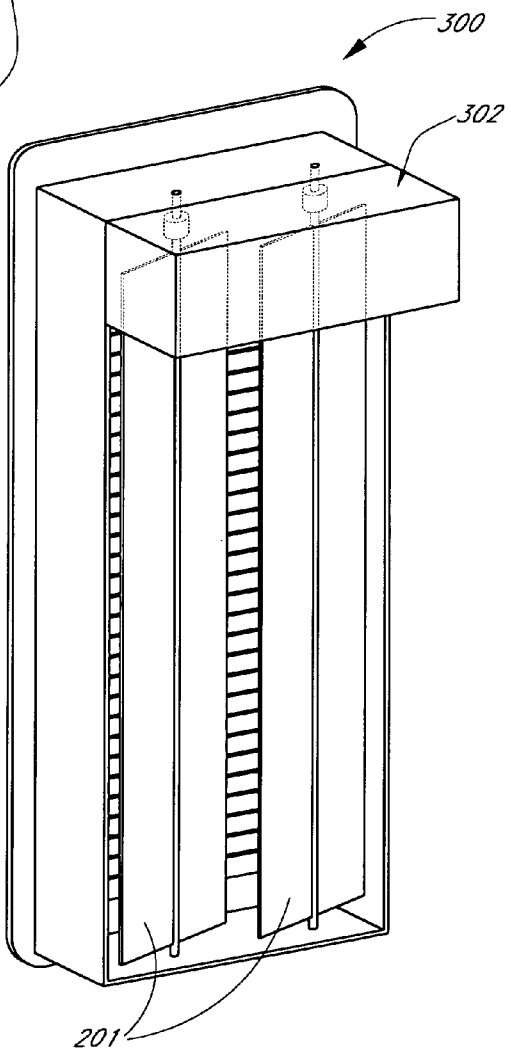

FIG. 3B

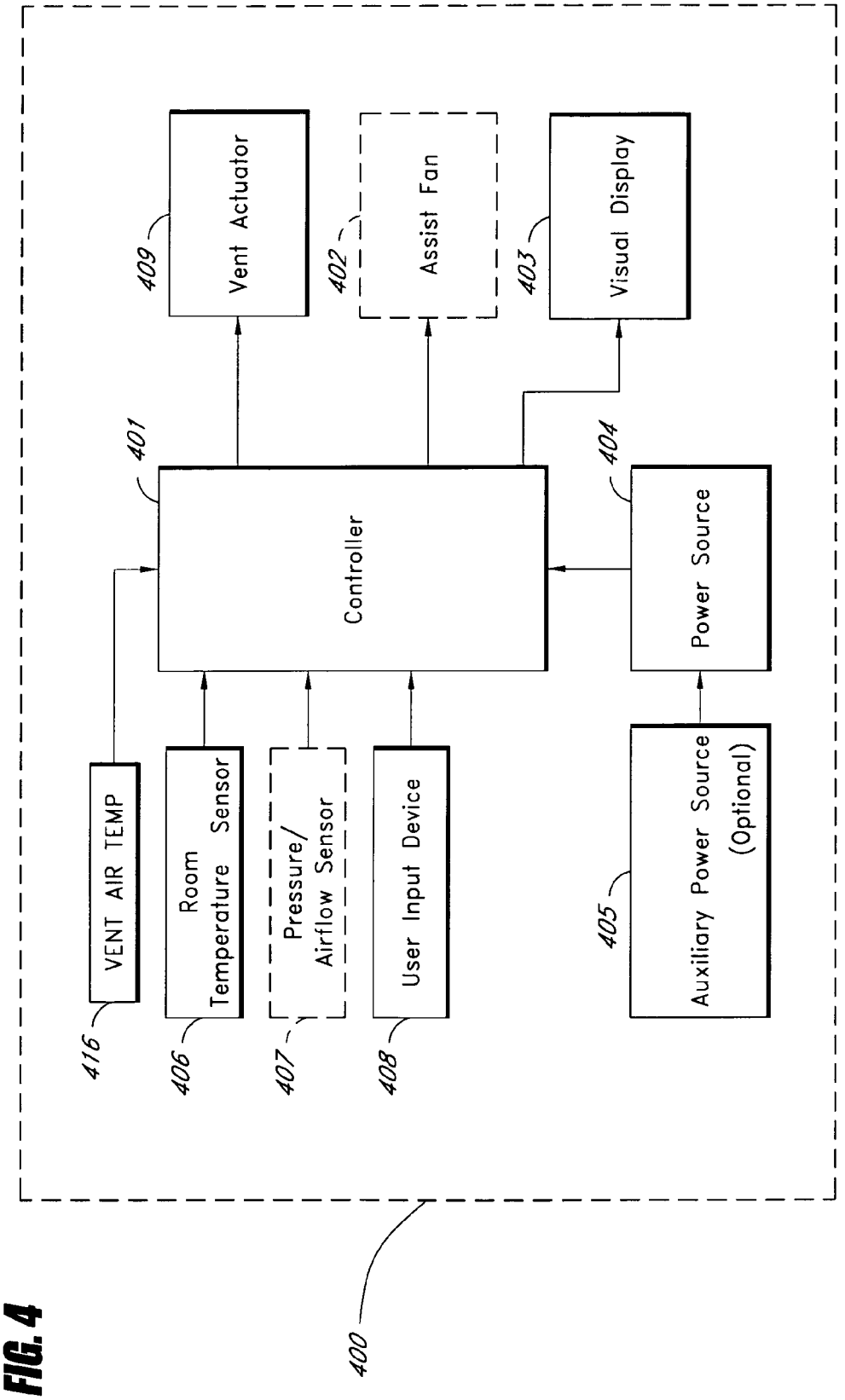
Vent Actuator
409
Assist Fan
402
Visual Display
403
401
Controller
404
Power Source
VENT AIR TEMP
416
Room Temperature Sensor
406
Pressure/ Airflow Sensor
407
User Input Device
408
405
Auxiliary Power Source (Optional)
400

FIG. 4

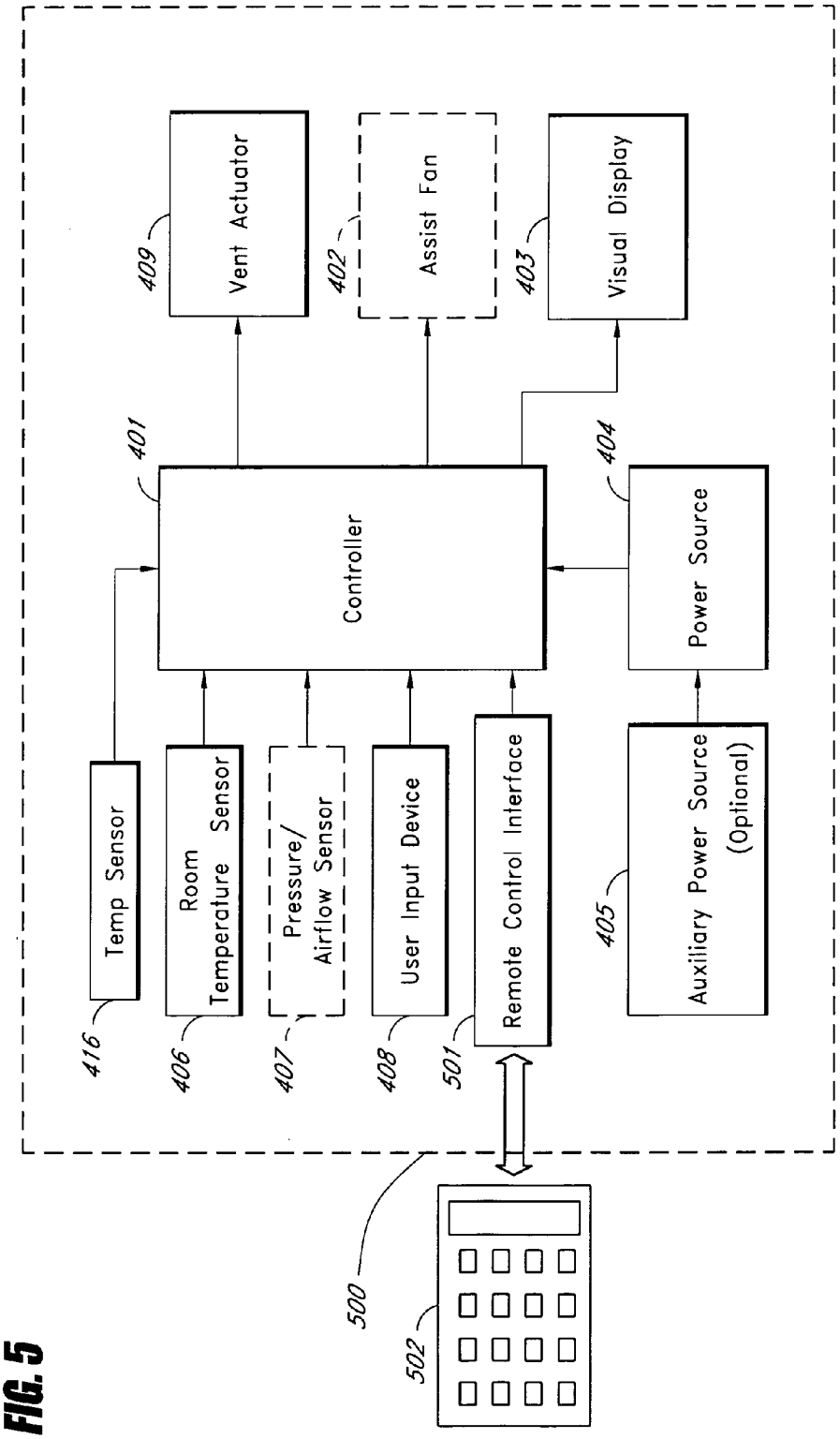
Vent Actuator
409
Assist Fan
402
Visual Display
403
401
Controller
404
Power Source
Temp Sensor
416
Room Temperature Sensor
406
Pressure/ Airflow Sensor
407
User Input Device
408
Remote Control Interface
501
Auxiliary Power Source (Optional)
405
500
502

FIG. 5

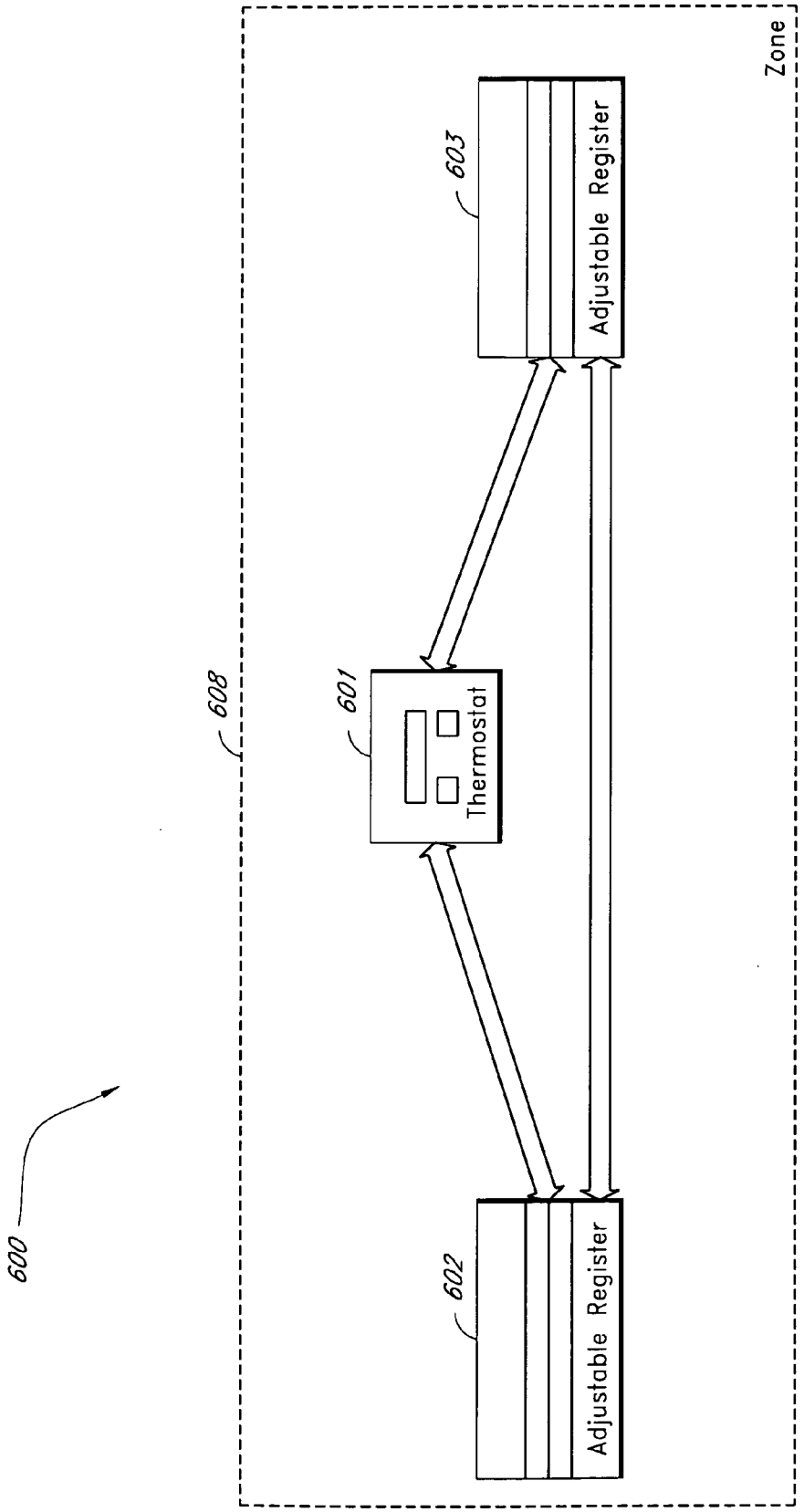
600
608
Zone
601
Thermostat
602
Adjustable Register
603
Adjustable Register

FIG. 6

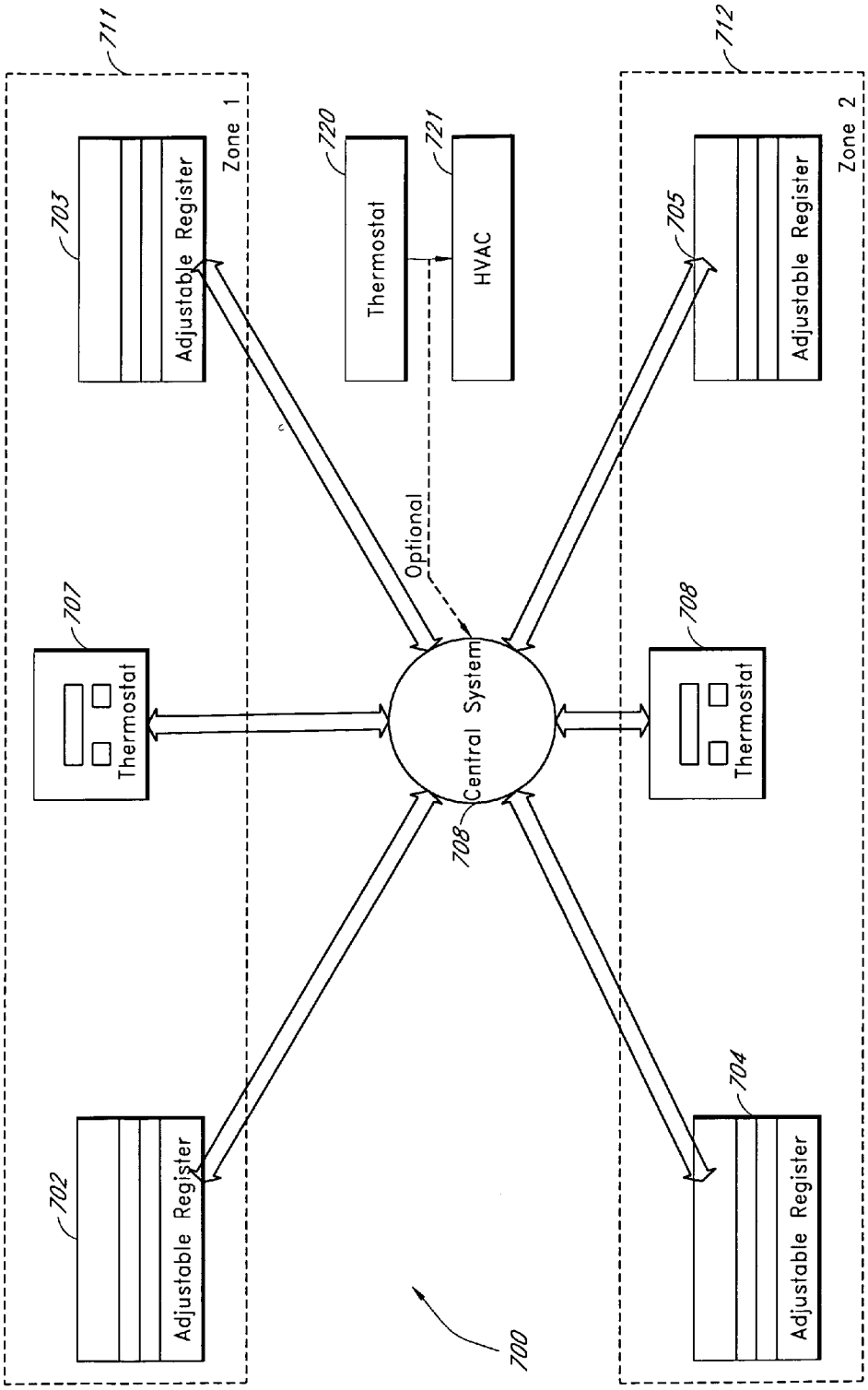
711
712
Zone 1
Zone 2
703
Adjustable Register
720
Thermostat
721
HVAC
705
Adjustable Register
Optional
707
Thermostat
Central System
708
708
Thermostat
702
Adjustable Register
704
Adjustable Register
700

FIG. 7A

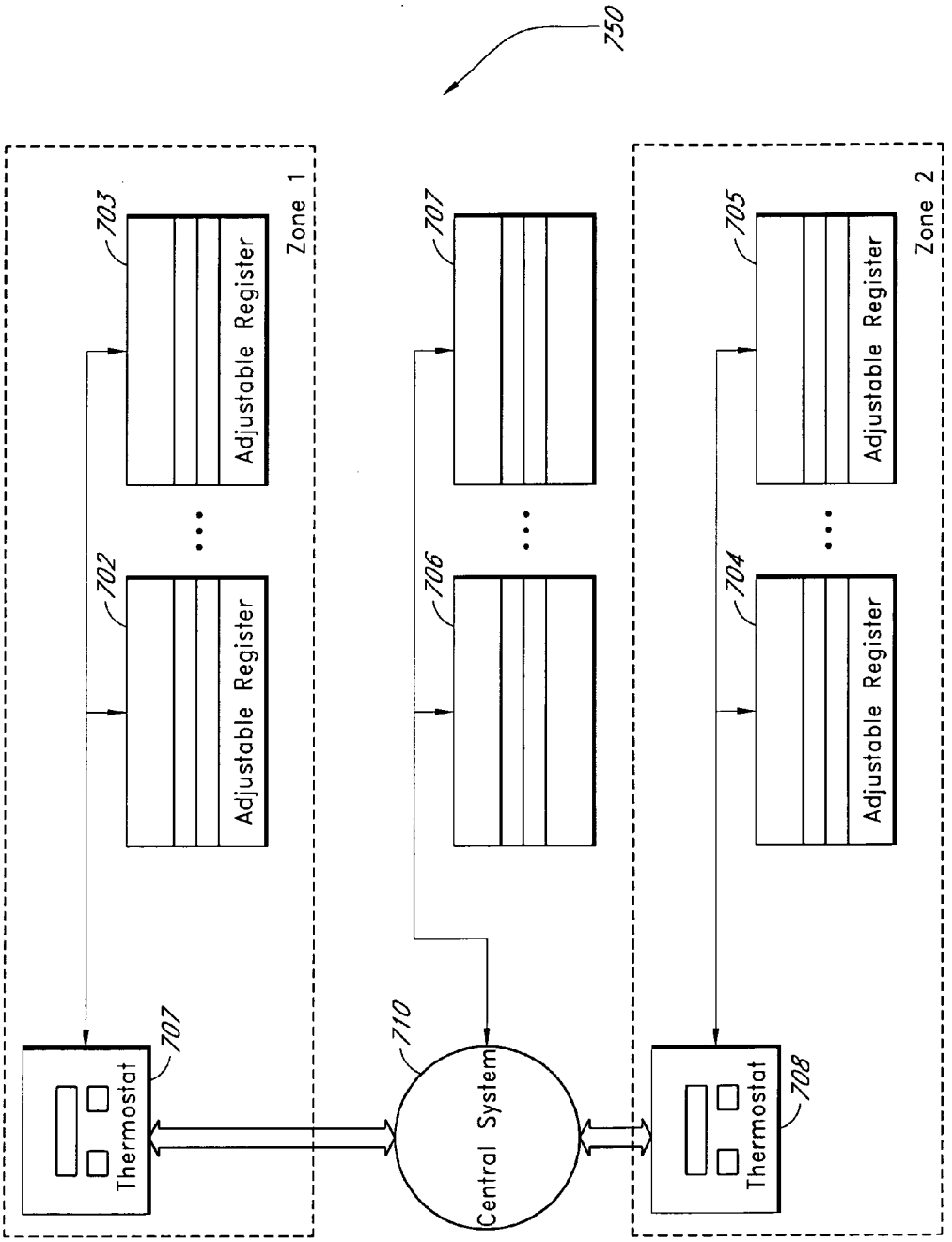
750
Zone 1
Zone 2
703
702
707
706
705
704
Adjustable Register
Adjustable Register
Adjustable Register
Adjustable Register
707
Thermostat
710
Central System
708
Thermostat

FIG. 7B

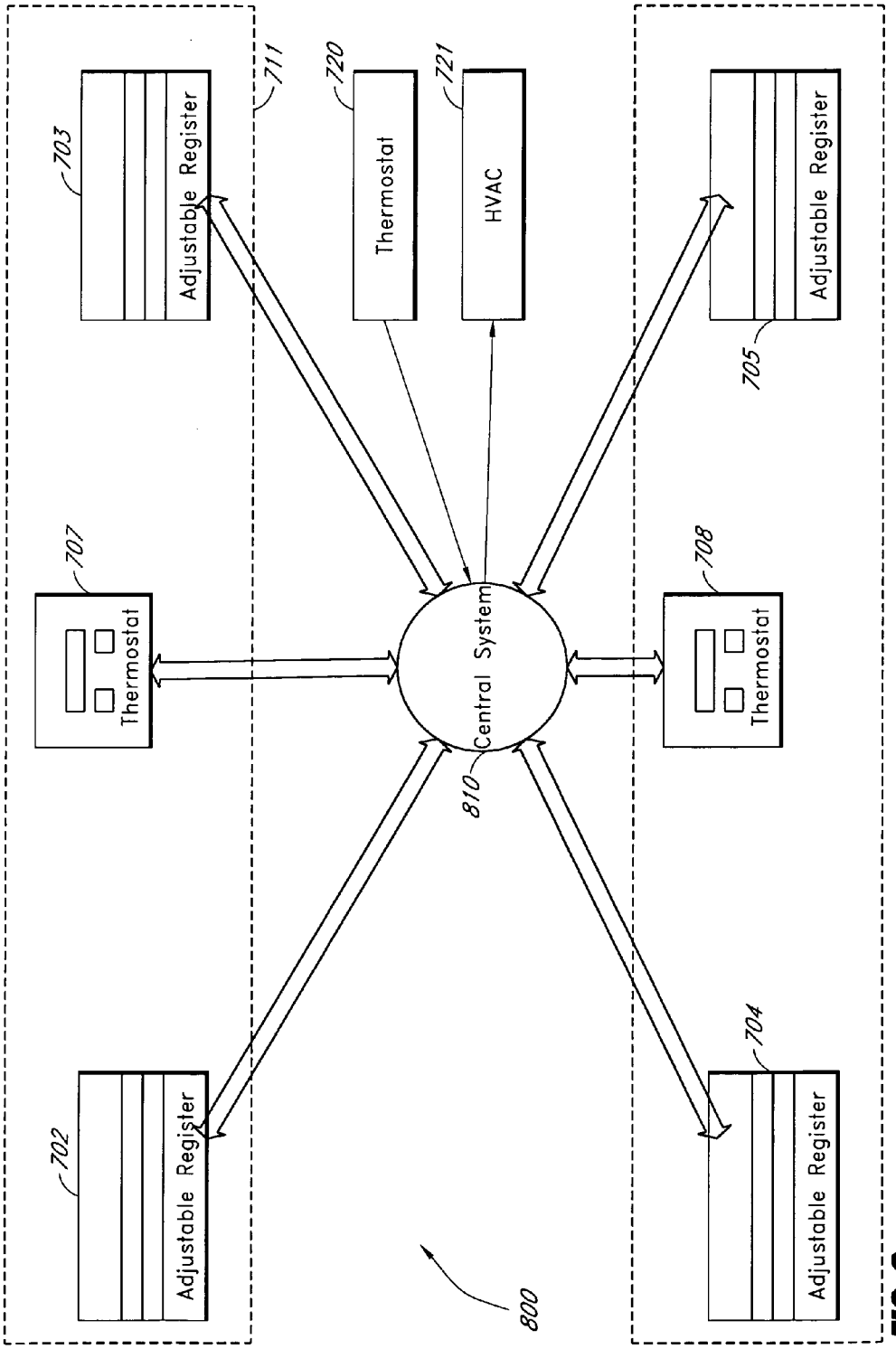
711
720
721
703
Adjustable Register
Thermostat
HVAC
Adjustable Register
705
707
Thermostat
Central System
810
708
Thermostat
704
702
Adjustable Register
Adjustable Register
800

FIG. 8

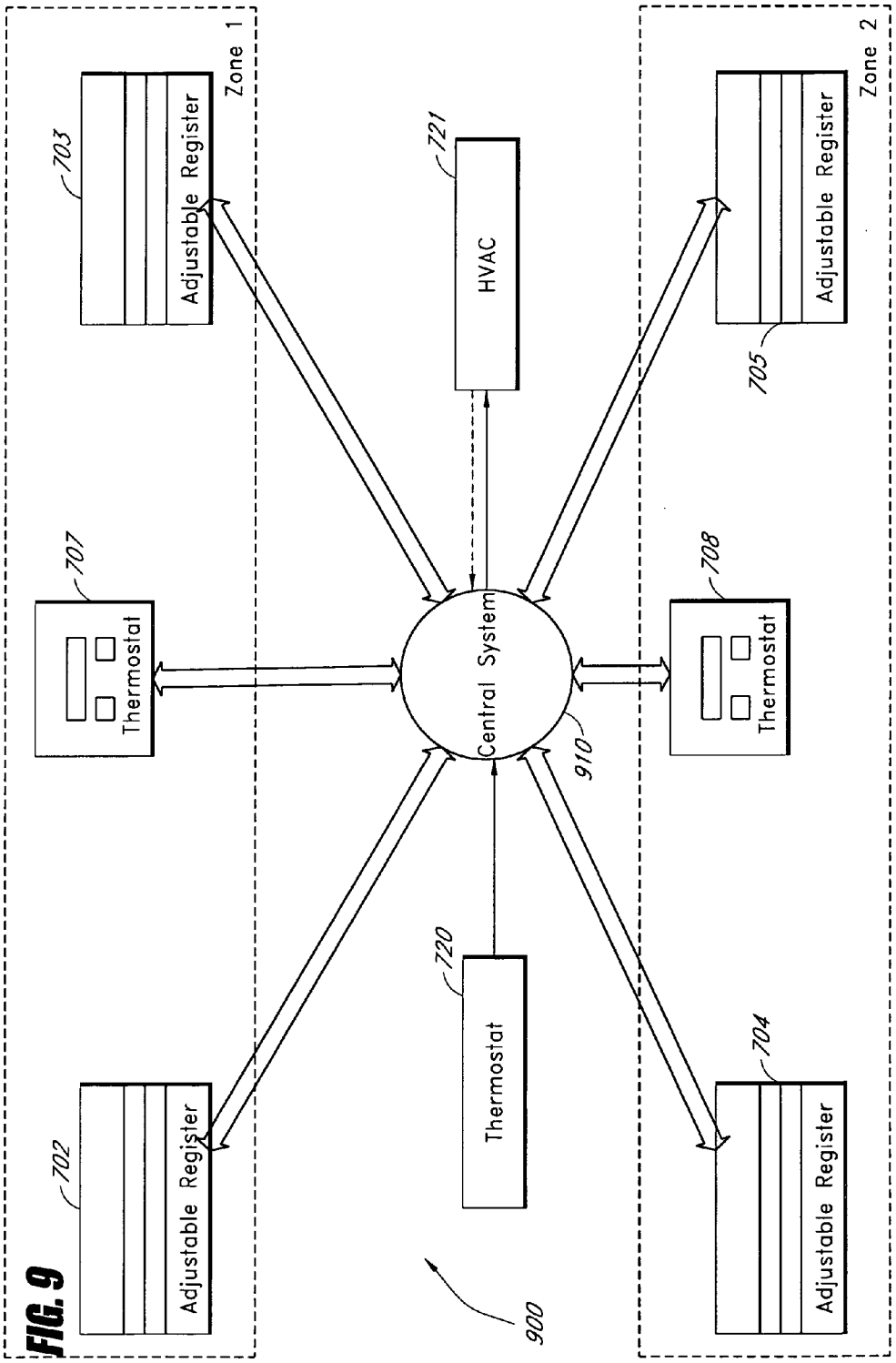
Zone 1
Zone 2
Adjustable Register
Adjustable Register
Adjustable Register
Adjustable Register
Thermostat
Thermostat
Thermostat
HVAC
Central System
702
703
704
705
707
708
720
721
910
900

FIG. 9

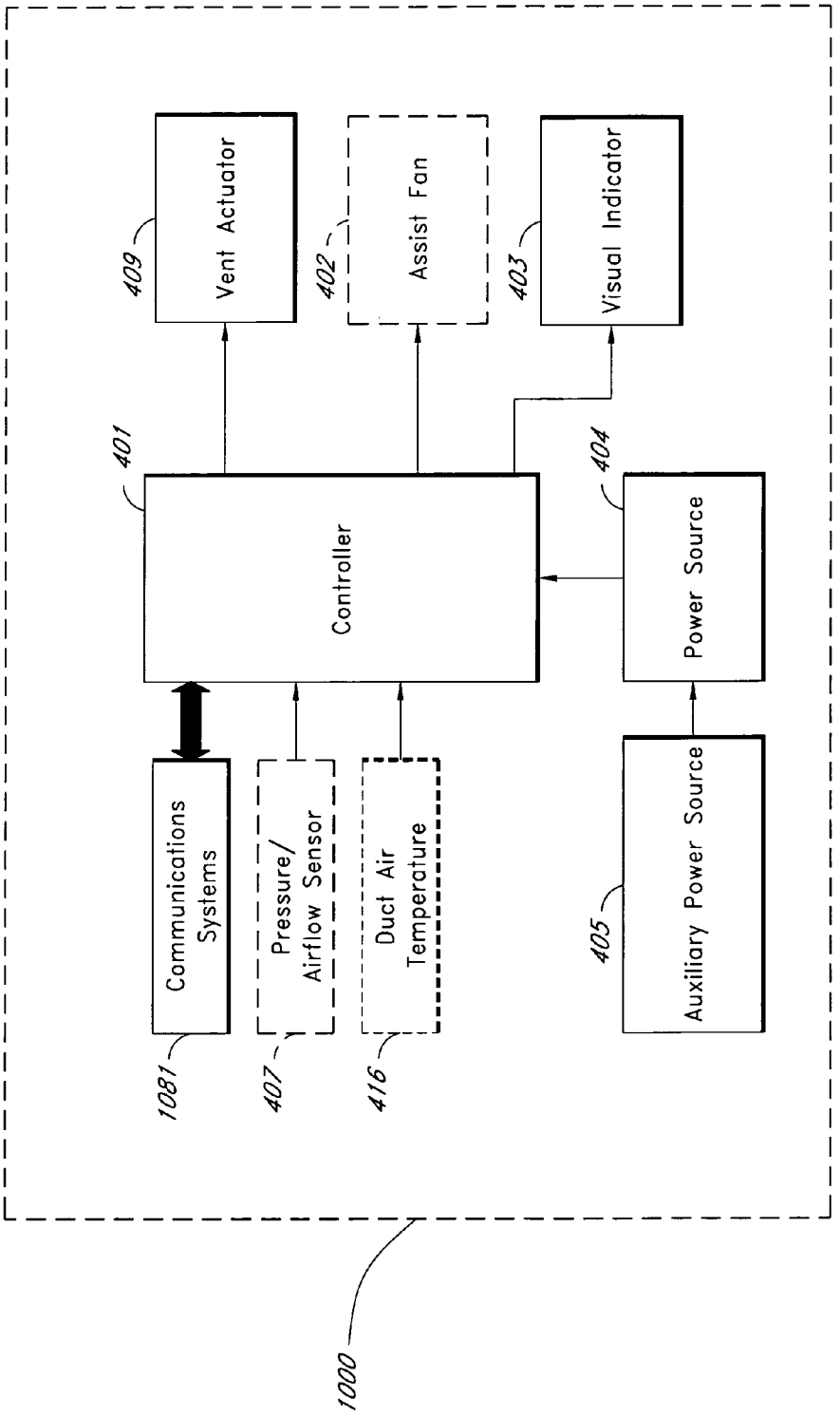
Vent Actuator
409
Assist Fan
402
Visual Indicator
403
401
Controller
404
Power Source
Communications Systems
1081
Pressure/ Airflow Sensor
407
Duct Air Temperature
416
Auxiliary Power Source
405
1000

FIG. 10

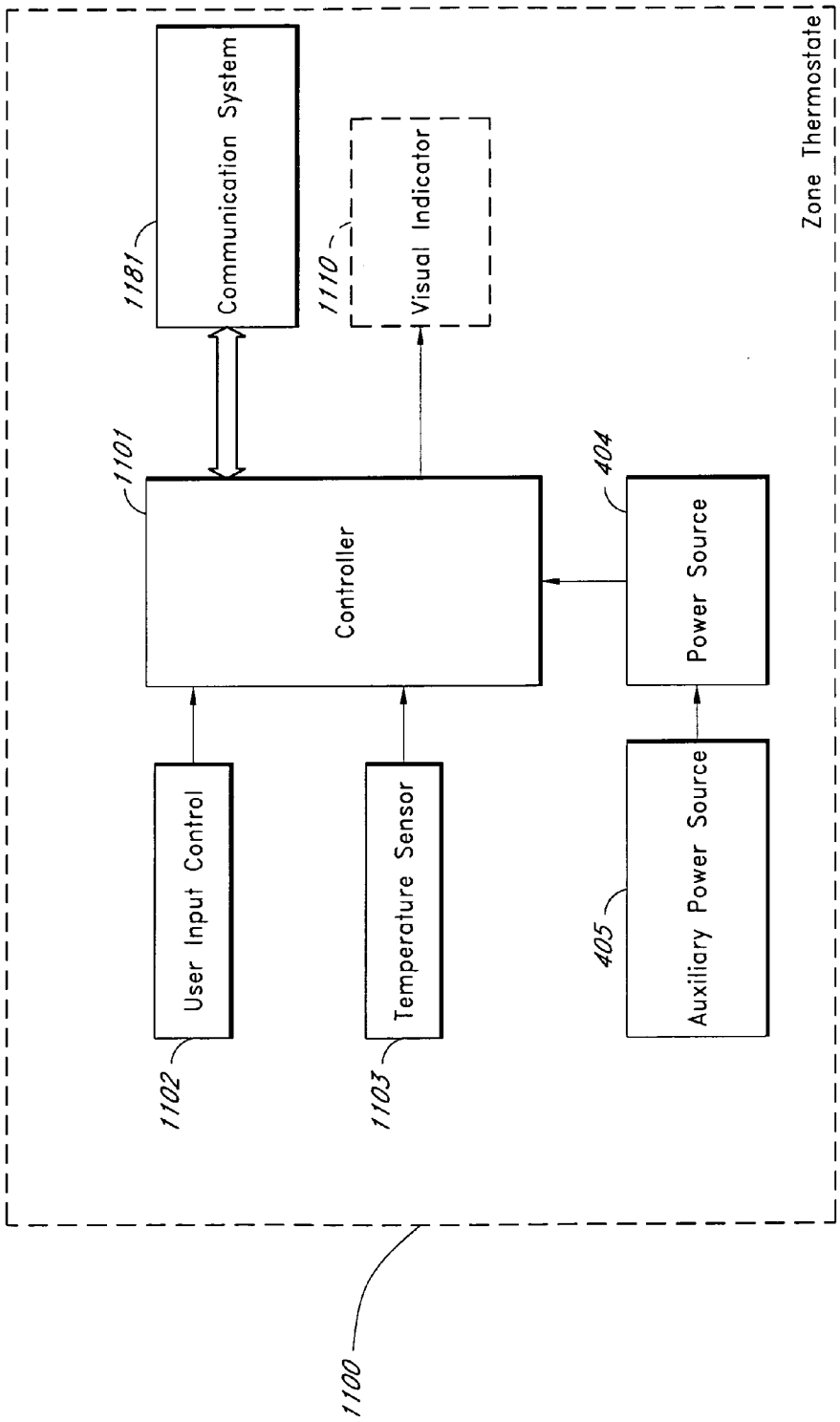
Zone Thermostate
Communication System
1181
Visual Indicator
1110
1101
Controller
404
Power Source
User Input Control
1102
Temperature Sensor
1103
405
Auxiliary Power Source
1100

FIG. 11

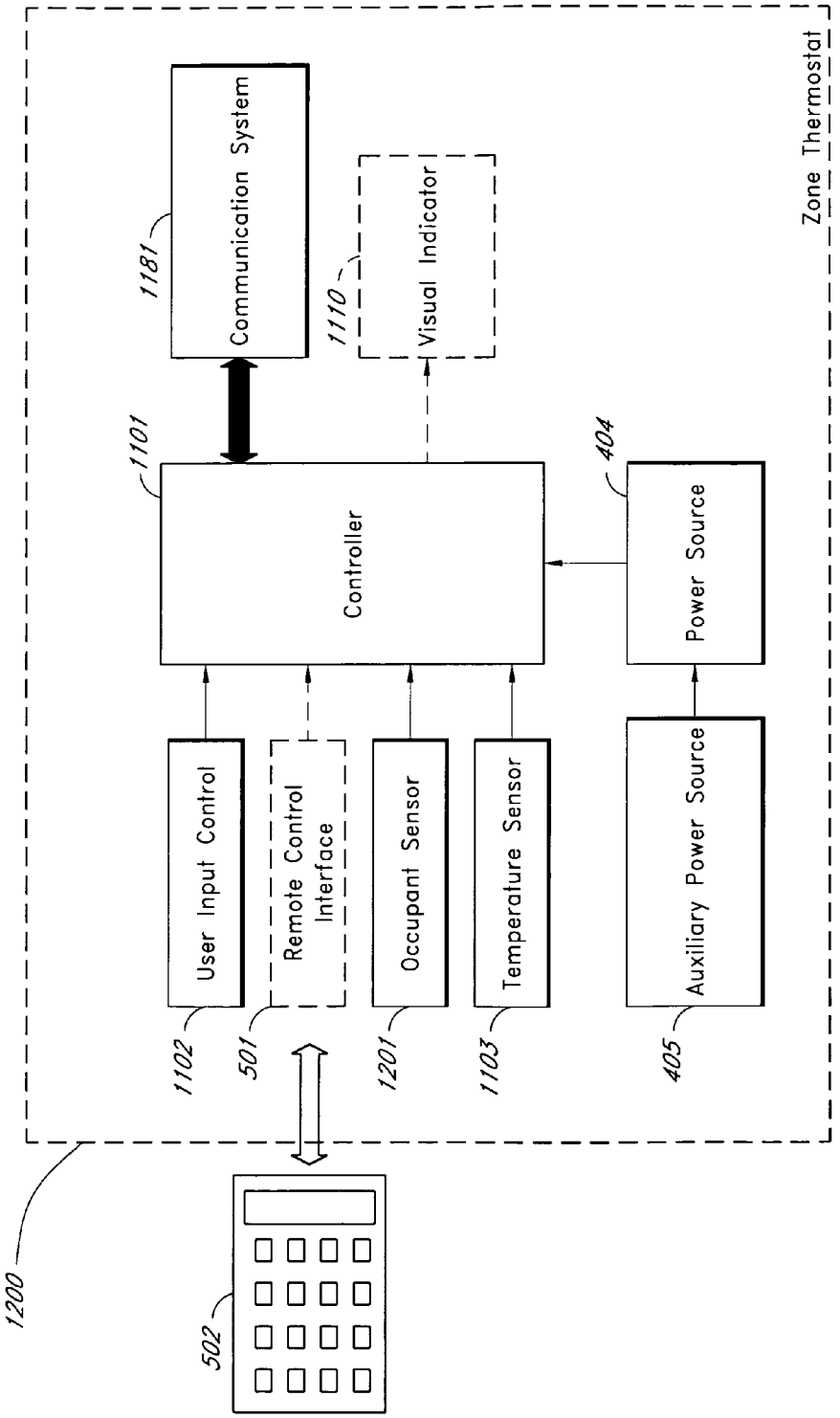
Zone Thermostat
Communication System
1181
Visual Indicator
1110
1101
Controller
404
Power Source
User Input Control
Remote Control Interface
Occupant Sensor
Temperature Sensor
Auxiliary Power Source
1102
501
1201
1103
405
1200
502

FIG. 12

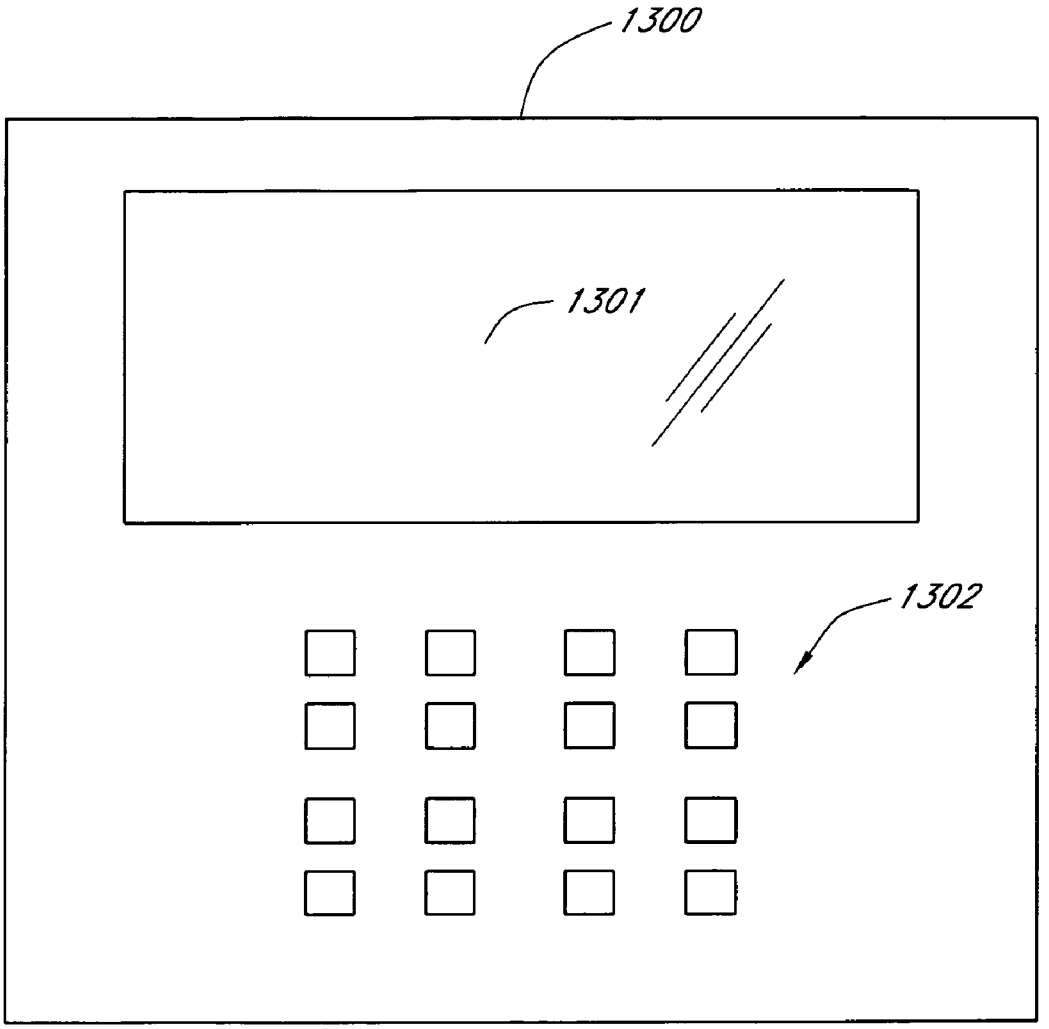

FIG. 13

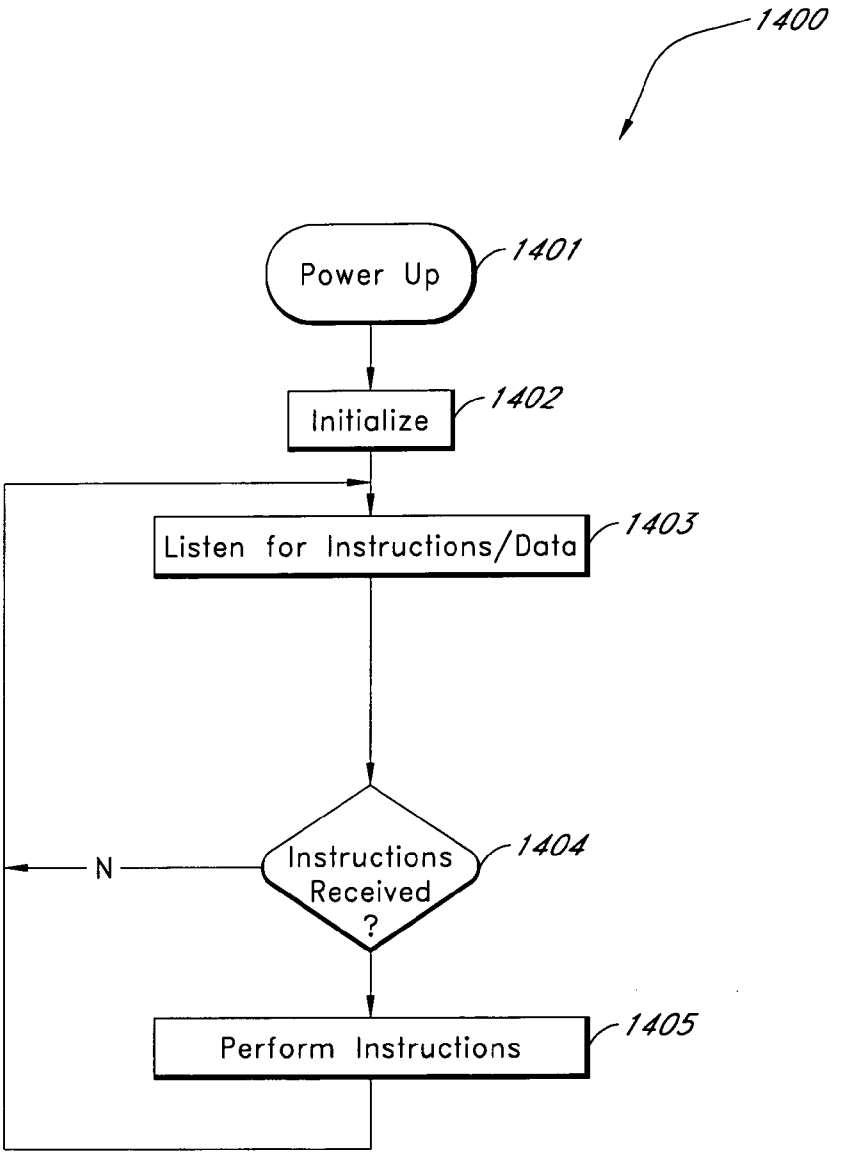
1400
Power Up
1401
Initialize
1402
Listen for Instructions/Data
1403
Instructions Received ?
1404
N
Perform Instructions
1405

FIG. 14

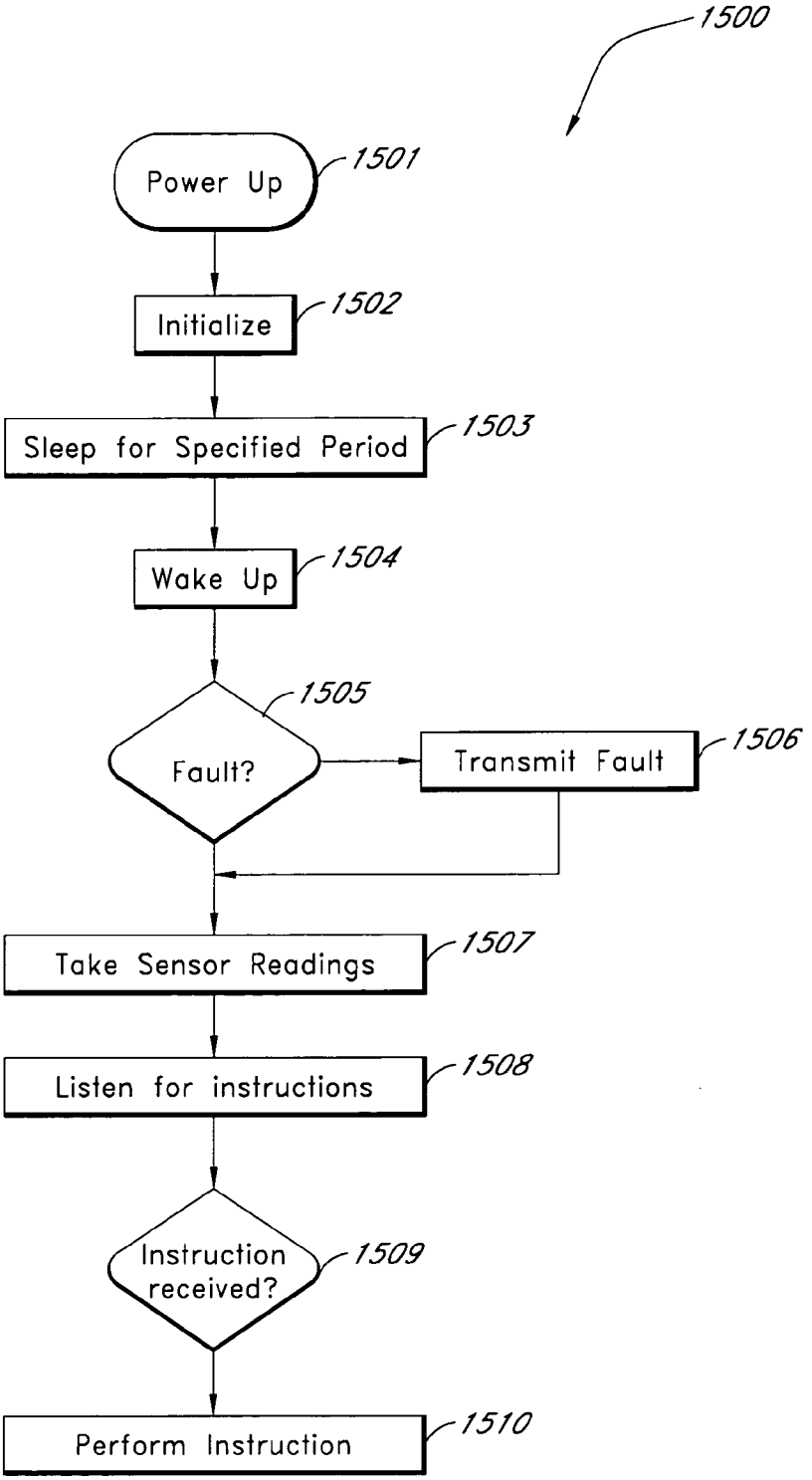
1500
Power Up
1501
Initialize
1502
Sleep for Specified Period
1503
Wake Up
1504
Fault?
1505
Transmit Fault
1506
Take Sensor Readings
1507
Listen for instructions
1508
Instruction received?
1509
Perform Instruction
1510

FIG. 15

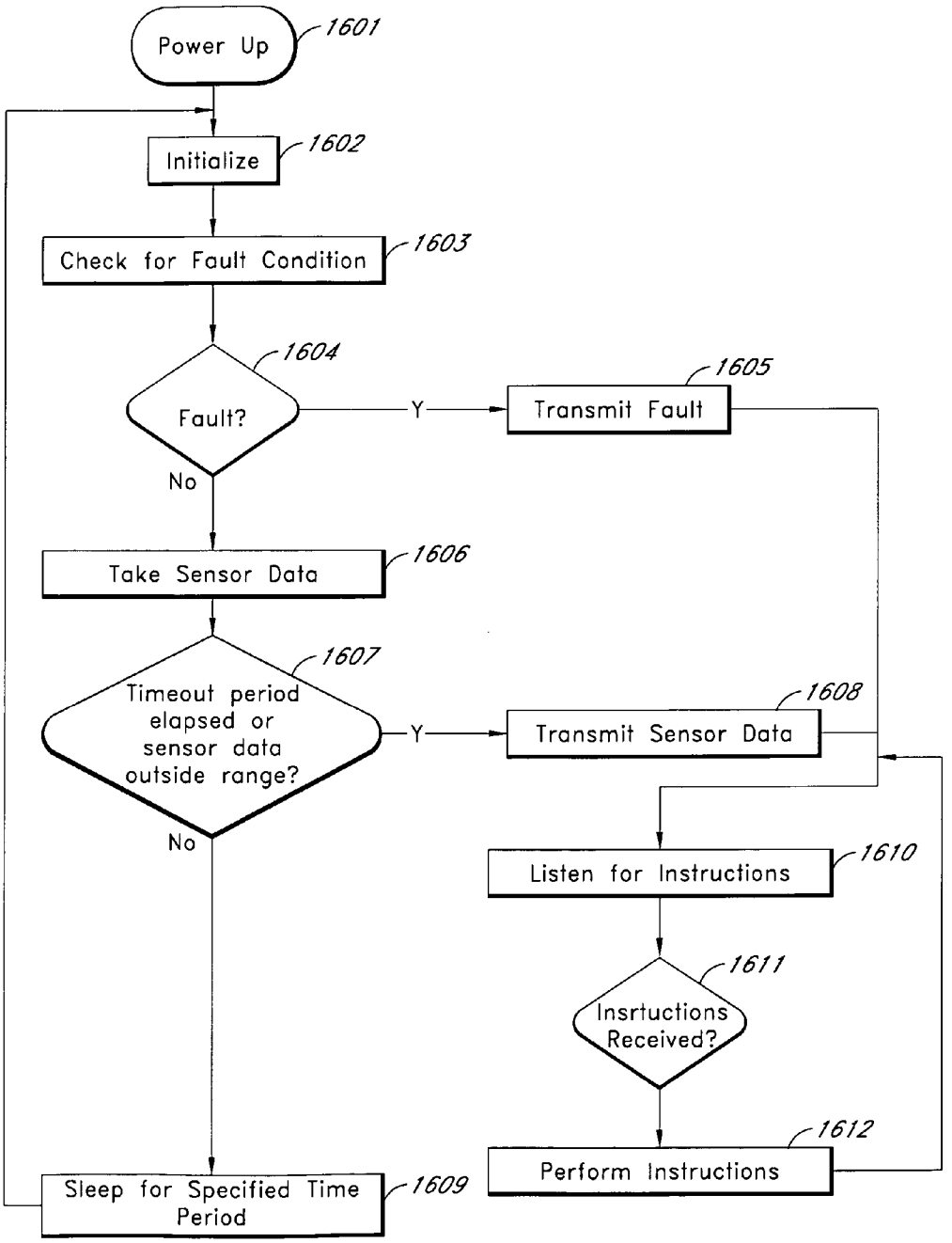
Power Up
1601
Initialize
1602
Check for Fault Condition
1603
Fault?
1604
Y
Transmit Fault
1605
No
Take Sensor Data
1606
Timeout period elapsed or sensor data outside range?
1607
Y
Transmit Sensor Data
1608
No
Listen for Instructions
1610
Insrtuctions Received?
1611
Perform Instructions
1612
Sleep for Specified Time Period
1609

FIG. 16

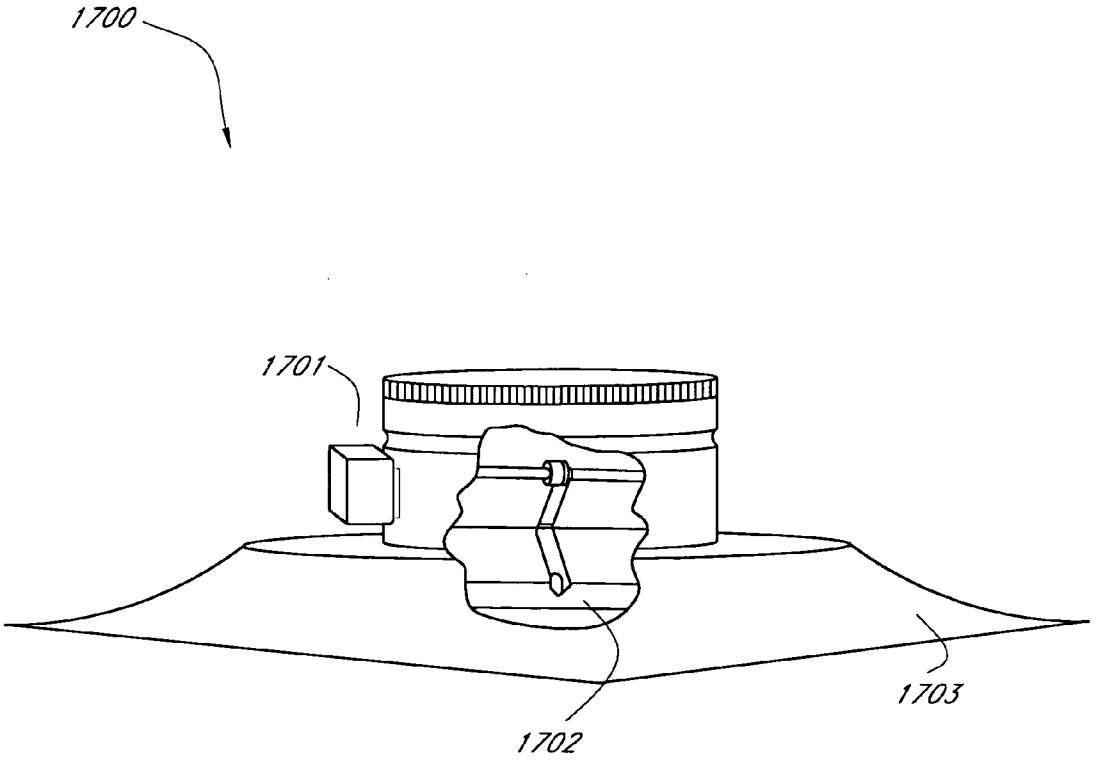

FIG. 17

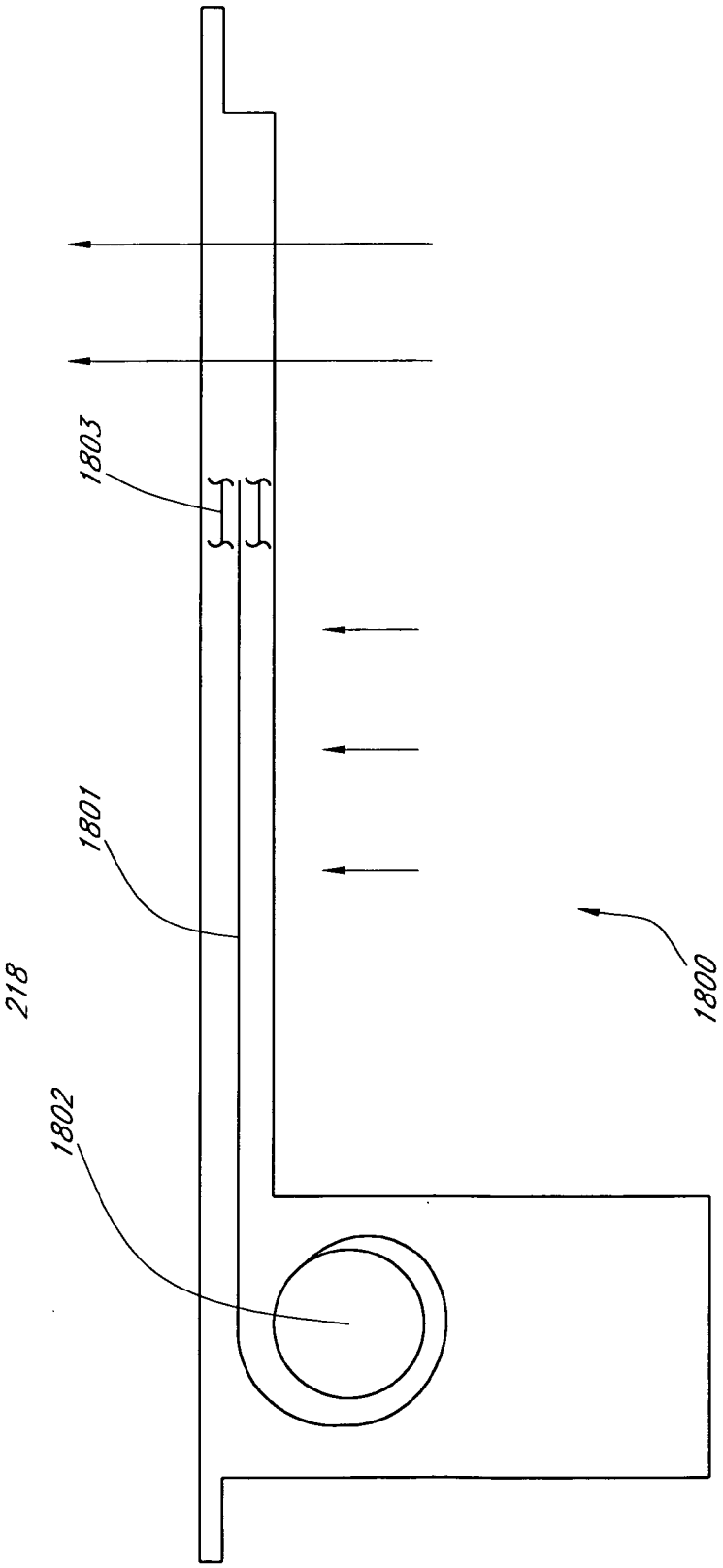

FIG. 18

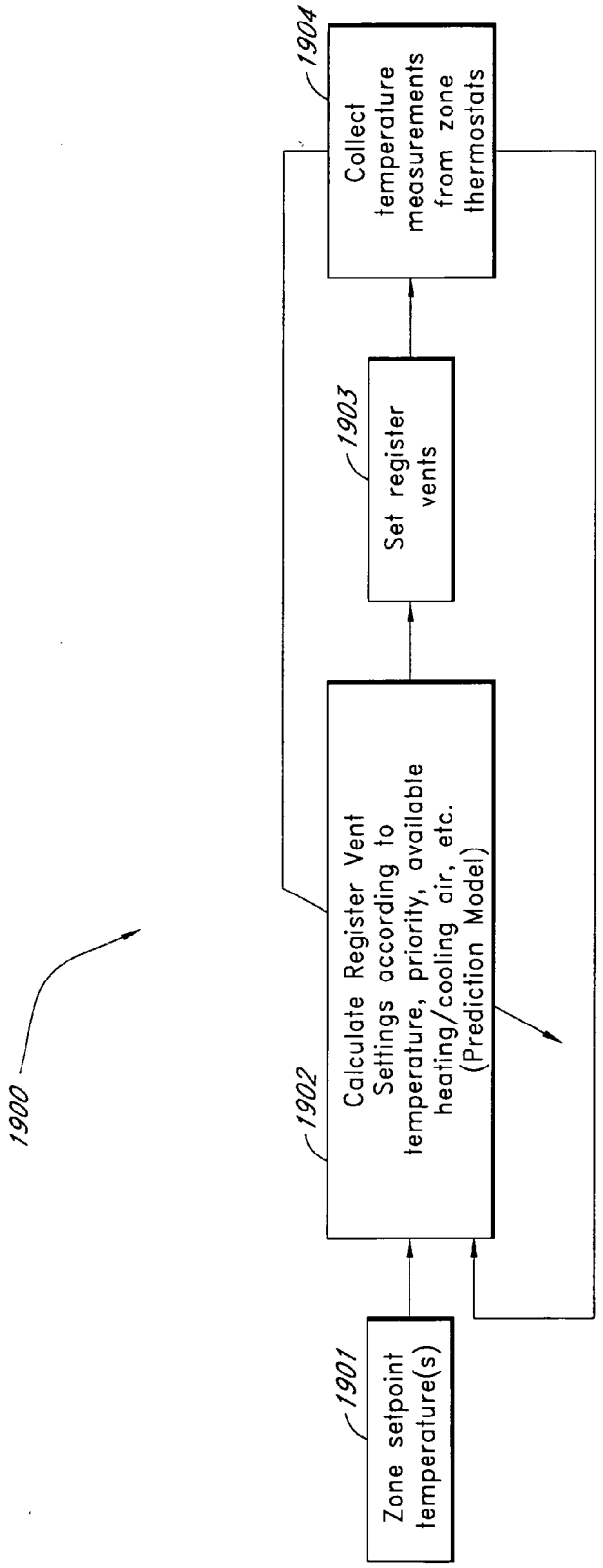
1900
1901
Zone setpoint temperature(s)
1902
Calculate Register Vent Settings according to temperature, priority, available heating/cooling air, etc. (Prediction Model)
1903
Set register vents
1904
Collect temperature measurements from zone thermostats

FIG. 19

ZONE THERMOSTAT FOR ZONE HEATING AND COOLING

BACKGROUND OF THE INVENTION

[0001] 1. Field of the Invention

[0002] The present invention relates to a system and method for directing heating and cooling air from an air handler to various zones in a home or commercial structure.

[0003] 2. Description of the Related Art

[0004] Most traditional home heating and cooling systems have one centrally-located thermostat that controls the temperature of the entire house. The thermostat turns the Heating, Ventilating, and Air-Conditioner (HVAC) system on or off for the entire house. The only way the occupants can control the amount of HVAC air to each room is to manually open and close the register vents throughout the house.

[0005] Zoned HVAC systems are common in commercial structures, and zoned systems have been making inroads into the home market. In a zoned system, sensors in each room or group of rooms, or zones, monitor the temperature. The sensors can detect where and when heated or cooled air is needed. The sensors send information to a central controller that activates the zoning system, adjusting motorized dampers in the ductwork and sending conditioned air only to the zone in which it is needed. A zoned system adapts to changing conditions in one area without affecting other areas. For example, many two-story houses are zoned by floor. Because heat rises, the second floor usually requires more cooling in the summer and less heating in the winter than the first floor. A non-zoned system cannot completely accommodate this seasonal variation. Zoning, however, can reduce the wide variations in temperature between floors by supplying heating or cooling only to the space that needs it.

[0006] A zoned system allows more control over the indoor environment because the occupants can decide which areas to heat or cool and when. With a zoned system, the occupants can program each specific zone to be active or inactive depending on their needs. For example, the occupants can set the bedrooms to be inactive during the day while the kitchen and living areas are active.

[0007] A properly zoned system can be up to **30** percent more efficient than a non-zoned system. A zoned system supplies warm or cool air only to those areas that require it. Thus, less energy is wasted heating and cooling spaces that are not being used.

[0008] In addition, a zoned system can sometimes allow the installation of smaller capacity equipment without compromising comfort. This reduces energy consumption by reducing wasted capacity.

[0009] Unfortunately, the equipment currently used in a zoned system is relatively expensive. Moreover, installing a zoned HVAC system, or retrofitting an existing system, is far beyond the capabilities of most homeowners. Unless the homeowner has specialized training, it is necessary to hire a specially-trained professional HVAC technician to configure and install the system. This makes zoned HVAC systems expensive to purchase and install. The cost of installation is such that even though the zoned system is more efficient, the payback period on such systems is many years. Such expense has severely limited the growth of zoned HVAC systems in the general home market.

SUMMARY

[0010] The system and method disclosed herein solves these and other problems by providing an Electronically-Controlled Register vent (ECRV) that can be easily installed by a homeowner or general handyman. The ECRV can be used to convert a non-zoned HVAC system into a zoned system. The ECRV can also be used in connection with a conventional zoned HVAC system to provide additional control and additional zones not provided by the conventional zoned HVAC system. In one embodiment, the ECRV is configured have a size and form-factor that conforms to a standard manually-controlled register vent. The ECRV can be installed in place of a conventional manually-controlled register vent often without the use of tools.

[0011] In one embodiment, the ECRV is a self-contained zoned system unit that includes a register vent, a power supply, a thermostat, and a motor to open and close the register vent. To create a zoned HVAC system, the homeowner can simply remove the existing register vents in one or more rooms and replace the register vents with the ECRVs. The occupants can set the thermostat on the EVCR to control the temperature of the area or room containing the ECRV. In one embodiment, the ECRV includes a display that shows the programmed setpoint temperature. In one embodiment, the ECRV includes a display that shows the current setpoint temperature. In one embodiment, the ECRV includes a remote control interface to allow the occupants to control the ECRV by using a remote control. In one embodiment, the remote control includes a display that shows the programmed temperature and the current temperature. In one embodiment, the remote control shows the battery status of the ECRV.

[0012] In one embodiment, the EVCR includes a pressure sensor to measure the pressure of the air in the ventilation duct that supplies air to the EVCR. In one embodiment, the EVCR opens the register vent if the air pressure in the duct exceeds a specified value. In one embodiment, the pressure sensor is configured as a differential pressure sensor that measures the difference between the pressure in the duct and the pressure in the room.

[0013] In one embodiment, the ECRV is powered by an internal battery. A battery-low indicator on the ECRV informs the homeowner when the battery needs replacement. In one embodiment, one or more solar cells are provided to recharge the batteries when light is available. In one embodiment, the register vent include a fan to draw additional air from the supply duct in order to compensate for undersized vents or zones that need additional heating or cooling air.

[0014] In one embodiment, one or more ECRVs in a zone communicate with a zone thermostat. The zone thermostat measures the temperature of the zone for all of the ECRVs that control the zone. In one embodiment, the ECRVs and the zone thermostat communicate by wireless communication methods, such as, for example, infrared communication, radio-frequency communication, ultrasonic communication, etc. In one embodiment, the ECRVs and the zone thermostat communicate by direct wire connections. In one embodi-

ment, the ECRVs and the zone thermostat communicate using powerline communication.

[0015] In one embodiment, one or more zone thermostats communicate with a central controller.

[0016] In one embodiment, the EVCR and/or the zoned thermostat includes an occupant sensor, such as, for example, an infrared sensor, motion sensor, ultrasonic sensor, etc. The occupants can program the EVCR or the zoned thermostat to bring the zone to different temperatures when the zone is occupied and when the zone is empty. In one embodiment, the occupants can program the EVCR or the zoned thermostat to bring the zone to different temperatures depending on the time of day, the time of year, the type of room (e.g. bedroom, kitchen, etc.), and/or whether the room is occupied or empty. In one embodiment, various EVCRs and/or zoned thermostats thought a composite zone (e.g., a group of zones such as an entire house, an entire floor, an entire wing, etc.) intercommunicate and change the temperature setpoints according to whether the composite zone is empty or occupied.

BRIEF DESCRIPTION OF THE DRAWINGS

[0017] **FIG. 1** shows a home with zoned heating and cooling.

[0018] **FIG. 2** shows one example of a conventional manually-controlled register vent.

[0019] **FIG. 3A** is a front view of one embodiment of an electronically-controlled register vent.

[0020] **FIG. 3B** is a rear view of the electronically-controlled register vent shown in **FIG. 3A**.

[0021] **FIG. 4** is a block diagram of a self-contained ECRV.

[0022] **FIG. 5** is a block diagram of a self-contained ECRV with a remote control.

[0023] **FIG. 6** is a block diagram of a locally-controlled zoned heating and cooling system wherein a zone thermostat controls one or more ECRVs.

[0024] **FIG. 7A** is a block diagram of a centrally-controlled zoned heating and cooling system wherein the central control system communicates with one or more zone thermostats and one or more ECRVs independently of the HVAC system.

[0025] **FIG. 7B** is a block diagram of a centrally-controlled zoned heating and cooling system wherein the central control system communicates with one or more zone thermostats and the zone thermostats communicate with one or more ECRVs.

[0026] **FIG. 8** is a block diagram of a centrally-controlled zoned heating and cooling system wherein a central control system communicates with one or more zone thermostats and one or more ECRVs and controls the HVAC system.

[0027] **FIG. 9** is a block diagram of an efficiency-monitoring centrally-controlled zoned heating and cooling system wherein a central control system communicates with one or more zone thermostats and one or more ECRVs and controls and monitors the HVAC system.

[0028] **FIG. 10** is a block diagram of an ECRV for use in connection with the systems shown in **FIGS. 6-9**.

[0029] **FIG. 11** is a block diagram of a basic zone thermostat for use in connection with the systems shown in **FIGS. 6-9**.

[0030] **FIG. 12** is a block diagram of a zone thermostat with remote control for use in connection with the systems shown in **FIGS. 6-9**.

[0031] **FIG. 13** shows one embodiment of a central monitoring system.

[0032] **FIG. 14** is a flowchart showing one embodiment of an instruction loop for an ECRV or zone thermostat.

[0033] **FIG. 15** is a flowchart showing one embodiment of an instruction and sensor data loop for an ECRV or zone thermostat.

[0034] **FIG. 16** is a flowchart showing one embodiment of an instruction and sensor data reporting loop for an ECRV or zone thermostat.

[0035] **FIG. 17** shows an ECRV configured to be used in connection with a conventional T-bar ceiling system found in many commercial structures.

[0036] **FIG. 18** shows an ECRV configured to use a scrolling curtain to control airflow as an alternative to the vanes shown in **FIGS. 2 and 3**.

[0037] **FIG. 19** is a block diagram of a control algorithm for controlling the register vents.

DETAILED DESCRIPTION

[0038] **FIG. 1** shows a home **100** with zoned heating and cooling. In the home **100**, an HVAC system provides heating and cooling air to a system of ducts. Sensors **101-105** monitor the temperature in various areas (zones) of the house. A zone can be a room, a floor, a group of rooms, etc. The sensors **101-105** detect where and when heating or cooling air is needed. Information from the sensors **101-105** is used to control actuators that adjust the flow of air to the various zones. The zoned system adapts to changing conditions in one area without affecting other areas. For example, many two-story houses are zoned by floor. Because heat rises, the second floor usually requires more cooling in the summer and less heating in the winter than the first floor. A non-zoned system cannot completely accommodate this seasonal variation. Zoning, however, can reduce the wide variations in temperature between floors by supplying heating or cooling only to the space that needs it.

[0039] **FIG. 2** shows one example of a conventional manually-controlled register vent **200**. The register **200** includes one or more vanes **201** that can be opened or closed to adjust the amount of air that flows through the register **200**. Diverters **202** direct the air in a desired direction (or directions). The vanes **201** are typically provided to a mechanical mechanism so that the occupants can manipulate the vanes **201** to control the amount of air that flows out of the register. **200**. In some registers, the diverters **202** are fixed. In some registers, the diverters **202** are moveable to allow the occupants some control over the direction of the airflow out of the vent. Registers such as the register **200** are found throughout homes that have a central HVAC system that provides heating and cooling air. Typically, relatively

small rooms such as bedrooms and bathrooms will have one or two such register vents of varying sizes. Larger rooms, such as living rooms, family rooms, etc., may have more than two such registers. The occupants of a home can control the flow of air through each of the vents by manually adjusting the vanes **201**. When the register vent is located on the floor, or relatively low on the wall, such adjustment is usually not particularly difficult (unless the mechanism that controls the vanes **201** is bent or rusted). However, adjustment of the vanes **201** can be very difficult when the register vent **200** is located so high on the wall that it cannot be easily reached.

[**0040**] **FIG. 3** shows one embodiment of an Electronically-Controlled Register Vent (ECRV) **300**. The ECRV **300** can be used to implement a zoned heating and cooling system. The ECRV **300** can also be used as a remotely control register vent in places where the vent is located so high on the wall that is cannot be easily reached. The ECRV **300** is configured as a replacement for the vent **200**. This greatly simplifies the task of retrofitting a home by replacing one or more of the register vents **200** with the ECRVs **300**. In one embodiment, shown in **FIG. 3**, the ECRV **300** is configured to fit into approximately the same size duct opening as the conventional register vent **200**. In one embodiment, the ECRV **300** is configured to fit over the duct opening used by the conventional register vent **200**. In one embodiment, the ECRV **300** is configured to fit over the conventional register **200**, thereby allowing the register **200** to be left in place. A control panel **301** provides one or more visual displays and, optionally, one or more user controls. A housing **302** is provided to house an actuator to control the vanes **201**. In one embodiment, the housing **302** can also be used to house electronics, batteries, etc.

[**0041**] **FIG. 4** is a block diagram of a self-contained ECRV **400**, which is one embodiment of the ECRV **300** shown in **FIGS. 3A and 3B** and the ECRV shown in **FIG. 18**. In the ECRV **400**, a temperature sensor **406** and a temperature sensor **416** are provided to a controller **401**. The controller **401** controls an actuator system **409**. The actuator system **409** provided mechanical movements to control the airflow through the vent. In one embodiment, the actuator system **409** includes an actuator provided to the vanes **201** or other air-flow devices to control the amount of air that flows through the ECRV **400** (e.g., the amount of air that flows from the duct into the room). In one embodiment, an actuator system includes an actuator provided to one or more of the diverters **202** to control the direction of the airflow. The controller **401** also controls a visual display **403** and an optional fan **402**. A user input device **408** is provided to allow the user to set the desired room temperature. An optional sensor **407** is provided to the controller **401**. In one embodiment, the sensor **407** includes an air pressure and/or airflow sensor. In one embodiment, the sensor **407** includes a humidity sensor. A power source **404** provides power to the controller **401**, the fan **402**, the display **403**, the temperature sensors **406**, **416**, the sensor **407**, and the user input device **408** as needed. In one embodiment, the controller **401** controls the amount of power provided to the fan **402**, the display **403**, the sensor **406**, the sensor **416**, the sensor **407**, and the user input device **408**. In one embodiment, an optional auxiliary power source **405** is also provided to provide additional power. The auxiliary power source is a supplementary source of electrical power, such as, for example, a battery, a solar cell, an airflow (e.g., wind-powered) generator, the fan **402** acting as a generator, a nuclear-based electrical generator, a fuel cell, a thermocouple, etc.

[**0042**] In one embodiment, the power source **404** is based on a non-rechargeable battery and the auxiliary power source **405** includes a solar cell and a rechargeable battery. The controller **401** draws power from the auxiliary power source when possible to conserve power in the power source **404**. When the auxiliary power source **405** is unable to provide sufficient power, then the controller **401** also draws power from the power source **404**.

[**0043**] In an alternative embodiment, the power source **404** is configured as a rechargeable battery and the auxiliary power source **405** is configured as a solar cell that recharges the power source **404**.

[**0044**] In one embodiment, the display **403** includes a flashing indicator (e.g., a flashing LED or LCD) when the available power from the power sources **404** and/or **405** drops below a threshold level.

[**0045**] The home occupants use the user input device **408** to set a desired temperature for the vicinity of the ECRV **400**. The display **403** shows the setpoint temperature. In one embodiment, the display **403** also shows the current room temperature. The temperature sensor **406** measures the temperature of the air in the room, and the temperature sensor **416** measures the temperature of the air in the duct. If the room temperature is above the setpoint temperature, and the duct air temperature is below the room temperature, then the controller **401** causes the actuator **409** to open the vent. If the room temperature is below the setpoint temperature, and the duct air temperature is above the room temperature, then the controller **401** causes the actuator **409** to open the vent. Otherwise, the controller **401** causes the actuator **409** to close the vent. In other words, if the room temperature is above or below the setpoint temperature and the temperature of the air in the duct will tend to drive the room temperature towards the setpoint temperature, then the controller **401** opens the vent to allow air into the room. By contrast, if the room temperature is above or below the setpoint temperature and the temperature of the air in the duct will not tend to drive the room temperature towards the setpoint temperature, then the controller **401** closes the vent.

[**0046**] In one embodiment, the controller **401** is configured to provide a few degrees of hysteresis (often referred to as a thermostat deadband) around the setpoint temperature in order to avoid wasting power by excessive opening and closing of the vent.

[**0047**] In one embodiment, the controller **401** turns on the fan **402** to pull additional air from the duct. In one embodiment, the fan **402** is used when the room temperature is relatively far from the setpoint temperature in order to speed the movement of the room temperature towards the setpoint temperature. In one embodiment, the fan **402** is used when the room temperature is changing relatively slowly in response to the open vent. In one embodiment, the fan **402** is used when the room temperature is moving away from the setpoint and the vent is fully open. The controller **401** does not turn on or run the fan **402** unless there is sufficient power available from the power sources **404**, **405**. In one embodiment, the controller **401** measures the power level of the power sources **404**, **405** before turning on the fan **402**, and periodically (or continually) when the fan is on.

[0048] In one embodiment, the controller **401** also does not turn on the fan **402** unless it senses that there is airflow in the duct (indicating that the HVAC air-handler fan is blowing air into the duct). In one embodiment, the sensor **407** includes an airflow sensor. In one embodiment, the controller **401** uses the fan **402** as an airflow sensor by measuring (or sensing) voltage generated by the fan **402** rotating in response to air flowing from the duct through the fan and causing the fan to act as a generator. In one embodiment, the controller **401** periodically stop the fan and checks for airflow from the duct.

[0049] In one embodiment, the sensor **406** includes a pressure sensor configured to measure the air pressure in the duct. In one embodiment, the sensor **406** includes a differential pressure sensor configured to measure the pressure difference between the air in the duct and the air outside the ECRV (e.g., the air in the room). Excessive air pressure in the duct is an indication that too many vents may be closed (thereby creating too much back pressure in the duct and reducing airflow through the HVAC system). In one embodiment, the controller **401** opens the vent when excess pressure is sensed.

[0050] The controller **401** conserves power by turning off elements of the ECRV **400** that are not in use. The controller **401** monitors power available from the power sources **404**, **405**. When available power drops below a low-power threshold value, the controls the actuator **409** to an open position, activates a visual indicator using the display **403**, and enters a low-power mode. In the low power mode, the controller **401** monitors the power sources **404**, **405** but the controller does not provide zone control functions (e.g., the controller does not close the actuator **409**). When the controller senses that sufficient power has been restored (e.g., through recharging of one or more of the power sources **404**, **405**, then the controller **401** resumes normal operation.

[0051] **FIG. 5** is a block diagram of a self-contained ECRV **500** with a remote control interface **501**. The ECRV **500** includes the power sources **404**, **405**, the controller **401**, the fan **402**, the display **403**, the temperature sensors **406**, **416**, the sensor **407**, and the user input device **408**. The remote control interface **501** is provided to the controller **401**, to allow the controller **401** to communicate with a remote control **502**. The controller **502** sends wireless signals to the remote control interface **501** using wireless communication such as, for example, infrared communication, ultrasonic communication, and/or radio-frequency communication.

[0052] In one embodiment, the communication is one-way, from the remote control **502** to the controller **401**. The remote control **502** can be used to set the temperature setpoint, to instruct the controller **401** to open or close the vent (either partially or fully), and/or to turn on the fan. In one embodiment, the communication between the remote control **502** and the controller **401** is two-way communication. Two-way communication allows the controller **401** to send information for display on the remote control **502**, such as, for example, the current room temperature, the power status of the power sources **404**, **405**, diagnostic information, etc.

[0053] The ECRV **400** described in connection with **FIG. 4**, and the ECRV **500** described in connection with **FIG. 5** are configured to operate as self-contained devices in a relatively stand-alone mode. If two ECRVs **400**, **500** are placed in the same room or zone, the ECRVs **400**, **500** will not necessarily operate in unison. **FIG. 6** is a block diagram of a locally-controlled zoned heating and cooling system **600** wherein a zone thermostat **601** monitors the temperature of a zone **608**. ECRVs **602**, **603** are configured to communicate with the zone thermostat **601**. One embodiment of the ECRVs **620-603** is shown, for example, in connection with **FIG. 10**. In one embodiment, the zone thermostat **601** sends control commands to the ECRVs **602-603** to cause the ECRVs **602-603** to open or close. In one embodiment, the zone thermostat **601** sends temperature information to the ECRVs **602-603** and the ECRVs **602-603** determine whether to open or close based on the temperature information received from the zone thermostat **601**. In one embodiment, the zone thermostat **601** sends information regarding the current zone temperature and the setpoint temperature to the ECRVs **602-603**.

[0054] In one embodiment, the ECRV **602** communicates with the ECRV **603** in order to improve the robustness of the communication in the system **600**. Thus, for example, if the ECRV **602** is unable to communicate with the zone thermostat **601** but is able to communicate with the ECRV **603**, then the ECRV **603** can act as a router between the ECRV **602** and the zone thermostat **601**. In one embodiment, the ECRV **602** and the ECRV **603** communicate to arbitrate opening and closing of their respective vents.

[0055] The system **600** shown in **FIG. 6** provides local control of a zone **608**. Any number of independent zones can be controlled by replicating the system **600**. **FIG. 7A** is a block diagram of a centrally-controlled zoned heating and cooling system wherein a central control system **710** communicates with one or more zone thermostats **707708** and one or more ECRVs **702-705**. In the system **700**, the zone thermostat **707** measures the temperature of a zone **711**, and the ECRVs **702**, **703** regulate air to the zone **711**. The zone thermostat **708** measures the temperature of a zone **712**, and the ECRVs **704**, **705** regulate air to the zone **711**. A central thermostat **720** controls the HVAC system **720**.

[0056] **FIG. 7B** is a block diagram of a centrally-controlled zoned heating and cooling system **750** that is similar to the system **700** shown in **FIG. 7A**. In **FIG. 7B**, the central system **710** communicates with the zone thermostats **707**, **708**, the zone thermostat **707** communicates with the ECRVs **702**, **703**, the zone thermostat **708** communicates with the ECRVs **704**, **705**, and the central system **710** communicates with the ECRVs **706**, **707**. In the system **750**, the ECRVs **702-705** are in zones that are associated with the respective zone thermostat **707**, **708** that controls the respective ECRVs **702-705**. The ECRVs **706**, **707** are not associated with any particular zone thermostat and are controlled directly by the central system **710**. One of ordinary skill in the art will recognize that the communication topology shown in **FIG. 7B** can also be used in connection with the system shown in **FIGS. 8 and 9**.

[0057] The central system **710** controls and coordinates the operation of the zones **711** and **712**, but the system **710** does not control the HVAC system **721**. In one embodiment, the central system **710** operates independently of the thermostat **720**. In one embodiment, the thermostat **720** is provided to the central system **710** so that the central system **710** knows when the thermostat is calling for heating, cooling, or fan.

[0058] The central system **710** coordinates and prioritizes the operation of the ECRVs **702-705**. In one embodiment, the home occupants and provide a priority schedule for the zones **711**, **712** based on whether the zones are occupied, the time of day, the time of year, etc. Thus, for example, if zone **711** corresponds to a bedroom and zone **712** corresponds to a living room, zone **711** can be given a relatively lower priority during the day and a relatively higher priority during the night. As a second example, if zone **711** corresponds to a first floor, and zone **712** corresponds to a second floor, then zone **712** can be given a higher priority in summer (since upper floors tend to be harder to cool) and a lower priority in winter (since lower floors tend to be harder to heat). In one embodiment, the occupants can specify a weighted priority between the various zones.

[0059] Closing too many vents at one time is often a problem for central HVAC systems as it reduces airflow through the HVAC system, and thus reduces efficiency. The central system **710** can coordinate how many vents are closed (or partially closed) and thus, ensure that enough vents are open to maintain proper airflow through the system. The central system **710** can also manage airflow through the home such that upper floors receive relatively more cooling air and lower floors receive relatively more heating air.

[0060] **FIG. 8** is a block diagram of a centrally-controlled zoned heating and cooling system **800**. The system **800** is similar to the system **700** and includes the zone thermostats **707**, **708** to monitor the zones **711**, **712**, respectively, and the ECRVs **702-705**. The zone thermostats **707**, **708** and/or the ECRVs **702-705** communicate with a central controller **810**. In the system **800**, the thermostat **720** is provided to the central system **810** and the central system **810** controls the HVAC system **721** directly.

[0061] The controller **810** provides similar functionality as the controller **710**. However, since the controller **810** also controls the operation of the HVAC system **721**, the controller **810** is better able to call for heating and cooling as needed to maintain the desired temperature of the zones **711**, **712**. If all, or substantially, all of the home is served by the zone thermostats and ECRVs, then the central thermostat **720** can be eliminated.

[0062] In some circumstances, depending on the return air paths in the house, the controller **810** can turn on the HVAC fan (without heating or cooling) to move air from zones that are too hot to zones that are too cool (or vice versa) without calling for heating or cooling. The controller **810** can also provide for efficient use of the HVAC system by calling for heating and cooling as needed, and delivering the heating and cooling to the proper zones in the proper amounts. If the HVAC system **721** provides multiple operating modes (e.g., high-speed, low-speed, etc.), then the controller **810** can operate the HVAC system **721** in the most efficient mode that provides the amount of heating or cooling needed.

[0063] **FIG. 9** is a block diagram of an efficiency-monitoring centrally-controlled zoned heating and cooling system **900**. The system **900** is similar to the system **800**. In the system **900** the controller **810** is replaced by an efficiency-monitoring controller **910** that is configured to receive sensor data (e.g., system operating temperatures, etc.) from the HVAC system **721** to monitor the efficiency of the HVAC system **721**.

[0064] **FIG. 10** is a block diagram of an ECRV **1000** for use in connection with the systems shown in **FIGS. 6-9**. The ECRV **1000** includes the power sources **404**, **405**, the controller **401**, the fan **402**, the display **403**, and, optionally the temperature sensors **416** and the sensor **407**, and the user input device **408**. A communication system **1081** is provided to the controller **401**. The remote control interface **501** is provided to the controller **401**, to allow the controller **401** to communicate with a remote control **502**. The controller **502** sends wireless signals to the remote control interface **501** using wireless communication such as, for example, infrared communication, ultrasonic communication, and/or radio-frequency communication.

[0065] The communication system **1081** is configured to communicate with the zone thermometer and, optionally, with the central controllers **710**, **810**, **910**. In one embodiment, the communication system **1081** is configured to communicate using wireless communication such as, for example, infrared communication, radio communication, or ultrasonic communication.

[0066] **FIG. 11** is a block diagram of a basic zone thermostat **1100** for use in connection with the systems shown in **FIGS. 6-9**. In the zone thermostat **1100**, a temperature sensor **1102** is provided to a controller **1101**. User input controls **1103** are also provided to the controller **1101** to allow the user to specify a setpoint temperature. A visual display **1110** is provided to the controller **1101**. The controller **1101** uses the visual display **1110** to show the current temperature, setpoint temperature, power status, etc. The communication system **1181** is also provided to the controller **1101**. The power source **404** and, optionally, **405** are provided to provide power for the controller **1100**, the controls **1101**, the sensor **1103**, the communication system **1181**, and the visual display **1110**.

[0067] In systems where a central controller **710**,**810**,**910** is used, the communication method used by the zone thermostat **1100** to communicate with the ECRV **1000** need not be the same method used by the zone thermostat **1100** to communicate with the central controller **710**,**810**,**910**. Thus, in one embodiment, the communication system **1181** is configured to provide one type of communication (e.g., infrared, radio, ultrasonic) with the central controller, and a different type of communication with the ECRV **1000**.

[0068] In one embodiment, the zone thermostat is battery powered. In one embodiment, the zone thermostat is configured into a standard light switch and receives electrical power from the light switch circuit.

[0069] **FIG. 12** is a block diagram of a zone thermostat **1200** with remote control for use in connection with the systems shown in **FIGS. 6-9**. The thermostat **1200** is similar to the thermostat **1100** and includes, the temperature sensor **1102**, the input controls **1103**, the visual display **1110**, the communication system **1181**, and the power sources **404**, **405**. In the zone thermostat **1200**, the remote control interface **501** is provided to the controller **1101**.

[0070] In one embodiment, an occupant sensor **1201** is provided to the controller **1101**. The occupant sensor **1201**, such as, for example, an infrared sensor, motion sensor, ultrasonic sensor, etc. senses when the zone is occupied. The occupants can program the zone thermostat **1201** to bring the zone to different temperatures when the zone is occupied

and when the zone is empty. In one embodiment, the occupants can program the zoned thermostat **1201** to bring the zone to different temperatures depending on the time of day, the time of year, the type of room (e.g. bedroom, kitchen, etc.), and/or whether the room is occupied or empty. In one embodiment, a group of zones are combined into a composite zone (e.g., a group of zones such as an entire house, an entire floor, an entire wing, etc.) and the central system **710**, **810**, **910** changes the temperature setpoints of the various zones according to whether the composite zone is empty or occupied.

[**0071**] **FIG. 13** shows one embodiment of a central monitoring station console **1300** for accessing the functions represented by the blocks **710**, **810**, **910** in **FIGS. 7**, **8**, **9**, respectively. The station **1300** includes a display **1301** and a keypad **1302**. The occupants can specify zone temperature settings, priorities, and thermostat deadbands using the central system **1300** and/or the zone thermostats. In one embodiment, the console **1300** is implemented as a hardware device. In one embodiment, the console **1300** is implemented in software as a computer display, such as, for example, on a personal computer. In one embodiment, the zone control functions of the blocks **710**, **810**, **910** are provided by a computer program running on a control system processor, and the control system processor interfaces with personal computer to provide the console **1300** on the personal computer. In one embodiment, the zone control functions of the blocks **710**, **810**, **910** are provided by a computer program running on a control system processor provided to a hardware console **1300**. In one embodiment, the occupants can use the Internet, telephone, cellular telephone, pager, etc. to remotely access the central system to control the temperature, priority, etc. of one or more zones.

[**0072**] **FIG. 14** is a flowchart showing one embodiment of an instruction loop process **1400** for an ECRV or zone thermostat. The process **1400** begins at a power-up block **1401**. After power up, the process proceeds to an initialization block **1402**. After initialization, the process advances to a "listen" block **1403** wherein the ECRV or zone thermostat listens for one or more instructions. If a decision block **1404** determines that an instruction has been received, then the process advances to a "perform instruction" block **1405**, otherwise the process returns to the listen block **1403**.

[**0073**] For an ECRV, the instructions can include: open vent, close vent, open vent to a specified partially-open position, report sensor data (e.g., airflow, temperature, etc.), report status (e.g, battery status, vent position, etc.), and the like. For a zone thermostat, the instructions can include: report temperature sensor data, report temperature rate of change, report setpoint, report status, etc. In systems where the central system communicates with the ECRVs through a zone thermostat, the instructions can also include: report number of ECRVs, report ECRV data (e.g., temperature, airflow, etc.), report ECRV vent position, change ECRV vent position, etc.

[**0074**] In one embodiment, the listen block **1403** consumes relatively little power, thereby allowing the ECRV or zone thermostat to stay in the loop corresponding to the listen block **1403** and conditional branch **1404** for extended periods of time.

[**0075**] Although the listen block **1403** can be implemented to use relatively little power, a sleep block can be implemented to use even less power. **FIG. 15** is a flowchart showing one embodiment of an instruction and sensor data loop process **1500** for an ECRV or zone thermostat. The process **1500** begins at a power-up block **1501**. After power up, the process proceeds to an initialization block **1502**. After initialization, the process advances to a "sleep" block **1503** wherein the ECRV or zone thermostat sleeps for a specified period of time. When the sleep period expires, the process advances to a wakeup block **1504** and then to a decision **1505**. In the decision block **1505**, if a fault is detected, then a transmit fault block **1506** is executed. The process then advances to a sensor block **1507** where sensor readings are taken. After taking sensor readings, the process advances to a listen-for-instructions block **1508**. If an instruction has been received, then the process advances to a "perform instruction" block **1510**; otherwise, the process returns to the sleep block **1503**.

[**0076**] **FIG. 16** is a flowchart showing one embodiment of an instruction and sensor data reporting loop process **1600** for an ECRV or zone thermostat. The process **1600** begins at a power-up block **1601**. After power up, the process proceeds to an initialization block **1602**. After initialization, the process advances to a check fault block **1603**. If a fault is detected then a decision block **1604** advances the process to a transmit fault block **1605**; otherwise, the process advances to a sensor block **1606** where sensor readings are taken. The data values from one or more sensors are evaluated, and if the sensor data is outside a specified range, or if a timeout period has occurred, then the process advances to a transmit data block **1608**; otherwise, the process advances to a sleep block **1609**. After transmitting in the transmit fault block **1605** or the transmit sensor data block **1608**, the process advances to a listen block **1610** where the ECRV or zone thermostat listens for instructions. If an instruction is received, then a decision block advances the process to a perform instruction block **1612**; otherwise, the process advances to the sleep block **1609**. After executing the perform instruction block **1612**, the process transmits an "instruction complete message" and returns to the listen block **1610**.

[**0077**] The process flows shown in **FIGS. 14-16** show different levels of interaction between devices and different levels of power conservation in the ECRV and/or zone thermostat. One of ordinary skill in the art will recognize that the ECRV and zone thermostat are configured to receive sensor data and user inputs, report the sensor data and user inputs to other devices in the zone control system, and respond to instructions from other devices in the zone control system. Thus the process flows shown in **FIGS. 14-16** are provided for illustrative purposes and not by way of limitation. Other data reporting and instruction processing loops will be apparent to those of ordinary skill in the art by using the disclosure herein.

[**0078**] In one embodiment, the ECRV and/or zone thermostat "sleep," between sensor readings. In one embodiment, the central system **710** sends out a "wake up" signal. When an ECRV or zone thermostat receives a wake up signal, it takes one or more sensor readings, encodes it into a digital signal, and transmits the sensor data along with an identification code.

[**0079**] In one embodiment, the ECRV is bi-directional and configured to receive instructions from the central system.

Thus, for example, the central system can instruct the ECRV to: perform additional measurements; go to a standby mode; wake up; report battery status; change wake-up interval; run self-diagnostics and report results; etc.

[0080] In one embodiment, the ECRV provides two wake-up modes, a first wake-up mode for taking measurements (and reporting such measurements if deemed necessary), and a second wake-up mode for listening for commands from the central system. The two wake-up modes, or combinations thereof, can occur at different intervals.

[0081] In one embodiment, the ECRVs use spread-spectrum techniques to communicate with the zone thermostats and/or the central system. In one embodiment, the ECRVs use frequency-hopping spread-spectrum. In one embodiment, each ECRV has an Identification code (ID) and the ECRVs attaches its ID to outgoing communication packets. In one embodiment, when receiving wireless data, each ECRV ignores data that is addressed to other ECRVs.

[0082] In one embodiment, the ECRV provides bi-directional communication and is configured to receive data and/or instructions from the central system. Thus, for example, the central system can instruct the ECRV to perform additional measurements, to go to a standby mode, to wake up, to report battery status, to change wake-up interval, to run self-diagnostics and report results, etc. In one embodiment, the ECRV reports its general health and status on a regular basis (e.g., results of self-diagnostics, battery health, etc.)

[0083] In one embodiment, the ECRV use spread-spectrum techniques to communicate with the central system. In one embodiment, the ECRV uses frequency-hopping spread-spectrum. In one embodiment, the ECRV has an address or identification (ID) code that distinguishes the ECRV from the other ECRVs. The ECRV attaches its ID to outgoing communication packets so that transmissions from the ECRV can be identified by the central system. The central system attaches the ID of the ECRV to data and/or instructions that are transmitted to the ECRV. In one embodiment, the ECRV ignores data and/or instructions that are addressed to other ECRVs.

[0084] In one embodiment, the ECRVs, zone thermostats, central system, etc., communicate on a 900 MHz frequency band. This band provides relatively good transmission through walls and other obstacles normally found in and around a building structure. In one embodiment, the ECRVs and zone thermostats communicate with the central system on bands above and/or below the 900 MHz band. In one embodiment, the ECRVs and zone thermostats listen to a radio frequency channel before transmitting on that channel or before beginning transmission. If the channel is in use, (e.g., by another device such as another central system, a cordless telephone, etc.) then the ECRVs and/or zone thermostats change to a different channel. In one embodiment, the sensor, central system coordinates frequency hopping by listening to radio frequency channels for interference and using an algorithm to select a next channel for transmission that avoids the interference. In one embodiment, the ECRV and/or zone thermostat transmits data until it receives an acknowledgement from the central system that the message has been received.

[0085] Frequency-hopping wireless systems offer the advantage of avoiding other interfering signals and avoiding collisions. Moreover, there are regulatory advantages given to systems that do not transmit continuously at one frequency. Channel-hopping transmitters change frequencies after a period of continuous transmission, or when interference is encountered. These systems may have higher transmit power and relaxed limitations on in-band spurs.

[0086] In one embodiment, the controller **401** reads the sensors **406**, **407**, **416** at regular periodic intervals. In one embodiment, the controller **401** reads the sensors **406**, **407**, **416** at random intervals. In one embodiment, the controller **401** reads the sensors **406**, **407**, **416** in response to a wake-up signal from the central system. In one embodiment, the controller **401** sleeps between sensor readings.

[0087] In one embodiment, the ECRV transmits sensor data until a handshaking-type acknowledgement is received. Thus, rather than sleep if no instructions or acknowledgements are received after transmission (e.g., after the instruction block **1510**, **1405**, **1612** and/or the transmit blocks **1605**, **1608**) the ECRV retransmits its data and waits for an acknowledgement. The ECRV continues to transmit data and wait for an acknowledgement until an acknowledgement is received. In one embodiment, the ECRV accepts an acknowledgement from a zone thermometer and it then becomes the responsibility of the zone thermometer to make sure that the data is forwarded to the central system. The two-way communication ability of the ECRV and zone thermometer provides the capability for the central system to control the operation of the ECRV and/or zone thermometer and also provides the capability for robust handshaking-type communication between the ECRV, the zone thermometer, and the central system.

[0088] In one embodiment of the system **600** shown in **FIG. 6**, the ECRVs **602**, **603** send duct temperature data to the zone thermostat **601**. The zone thermostat **601** compares the duct temperature to the room temperature and the setpoint temperature and makes a determination as to whether the ECRVs **602**, **603** should be open or closed. The zone thermostat **601** then sends commands to the ECRVs **602**, **603** to open or close the vents. In one embodiment, the zone thermostat **601** displays the vent position on the visual display **1110**.

[0089] In one embodiment of the system **600** shown in **FIG. 6**, the zone thermostat **601** sends setpoint information and current room temperature information to the ECRVs **602**, **603**. The ECRVs **602**, **603** compare the duct temperature to the room temperature and the setpoint temperature and makes a determination as to whether to open or close the vents. In one embodiment, the ECRVs **602**, **603** send information to the zone thermostat **601** regarding the relative position of the vents (e.g., open, closed, partially open, etc.).

[0090] In the systems **700**, **750**, **800**, **900** (the centralized systems) the zone thermostats **707**, **708** send room temperature and setpoint temperature information to the central system. In one embodiment, the zone thermostats **707**, **708** also send temperature slope (e.g., temperature rate of rise or fall) information to the central system. In the systems where the thermostat **720** is provided to the central system or where the central system controls the HVAC system, the central system knows whether the HVAC system is providing heating or cooling; otherwise, the central system used duct temperature information provide by the ECRVs **702-705** to determine whether the HVAC system is heating or cooling.

In one embodiment, ECRVs send duct temperature information to the central system. In one embodiment, the central system queries the ECRVs by sending instructions to one or more of the ECRVs **702-705** instructing the ECRV to transmit its duct temperature.

[**0091**] The central system determines how much to open or close ECRVs **702-705** according to the available heating and cooling capacity of the HVAC system and according to the priority of the zones and the difference between the desired temperature and actual temperature of each zone. In one embodiment, the occupants use the zone thermostat **707** to set the setpoint and priority of the zone **711**, the zone thermostat **708** to set the setpoint and priority of the zone **712**, etc. In one embodiment, the occupants use the central system console **1300** to set the setpoint and priority of each zone, and the zone thermostats to override (either on a permanent or temporary basis) the central settings. In one embodiment, the central console **1300** displays the current temperature, setpoint temperature, temperature slope, and priority of each zone.

[**0092**] In one embodiment, the central system allocates HVAC air to each zone according to the priority of the zone and the temperature of the zone relative to the setpoint temperature of the zone. Thus, for example, in one embodiment, the central system provides relatively more HVAC air to relatively higher priority zones that are not at their temperature setpoint than to lower priority zones or zones that are at or relatively near their setpoint temperature. In one embodiment, the central system avoids closing or partially closing too many vents in order to avoid reducing airflow in the duct below a desired minimum value.

[**0093**] In one embodiment, the central system monitors a temperature rate of rise (or fall) in each zone and sends commands to adjust the amount each ECRV **702-705** is open to bring higher priority zones to a desired temperature without allowing lower-priority zones to stray too far form their respective setpoint temperature.

[**0094**] In one embodiment, the central system uses predictive modeling to calculate an amount of vent opening for each of the ECRVs **702-705** to reduce the number of times the vents are opened and closed and thereby reduce power usage by the actuators **409**. In one embodiment, the central system uses a neural network to calculate a desired vent opening for each of the ECRVs **702-705**. In one embodiment, various operating parameters such as the capacity of the central HVAC system, the volume of the house, etc., are programmed into the central system for use in calculating vent openings and closings. In one embodiment, the central system is adaptive and is configured to learn operating characteristics of the HVAC system and the ability of the HVAC system to control the temperature of the various zones as the ECRVs **702-705** are opened and closed. In an adaptive learning system, as the central system controls the ECRVs to achieve the desired temperature over a period of time, the central system learns which ECRVs need to be opened, and by how much, to achieve a desired level of heating and cooling for each zone. The use of such an adaptive central system is convenient because the installer is not required to program HVAC operating parameters into the central system. In one embodiment, the central system provides warnings when the HVAC system appears to be operating abnormally, such as, for example, when the temperature of one or more zones does not change as expected (e.g., because the HVAC system is not operating properly, a window or door is open, etc.).

[**0095**] In one embodiment, the adaptation and learning capability of the central system uses different adaptation results (e.g., different coefficients) based on whether the HVAC system is heating or cooling, the outside temperature, a change in the setpoint temperature or priority of the zones, etc. Thus, in one embodiment, the central system uses a first set of adaptation coefficients when the HVAC system is cooling, and a second set of adaptation coefficients when the HVAC system is heating. In one embodiment, the adaptation is based on a predictive model. In one embodiment, the adaptation is based on a neural network.

[**0096**] **FIG. 17** shows an ECRV **1700** configured to be used in connection with a conventional T-bar ceiling system found in many commercial structures. In the ECRV **1700**, an actuator **1701** (as one embodiment of the actuator **409**) is provided to a damper **1702**. The damper **1702** is provided to a diffuser **1703** that is configured to mount in a conventional T-bar ceiling system. The ECRV **1700** can be connected to a zoned thermostat or central system by wireless or wired communication.

[**0097**] In one embodiment, the sensors **407** in the ECRVs include airflow and/or air velocity sensors. Data from the sensors **407** are transmitted by the ECRV to the central system. The central system uses the airflow and/or air velocity measurements to determine the relative amount of air through each ECRV. Thus, for example, by using airflow/velocity measurements, the central system can adapt to the relatively lower airflow of smaller ECRVs and ECRVs that are situated on the duct further from the HVAC blower than ECRVs which are located closer to the blower (the closer ECRVs tend to receive more airflow).

[**0098**] **FIG. 18** shows a register vent **1800** configured to use a scrolling curtain **1801** to control airflow as an alternative to the vanes shown in **FIGS. 2 and 3**. An actuator **1802** (one embodiment of the actuator **409**) is provided to the curtain **1801** to move the curtain **1801** across the register to control the size of a register airflow opening. In one embodiment, the curtain **1801** is guided and held in position by a track **1803**.

[**0099**] In one embodiment, the actuator **1802** is a rotational actuator and the scrolling curtain **1801** is rolled around the actuator **1802**, and the register vent **1800** is open and rigid enough to be pushed into the vent opening by the actuator **1802** when the actuator **1802** rotates to unroll the curtain **1801**.

[**0100**] In one embodiment, the actuator **1802** is a rotational actuator and the scrolling curtain **1801** is rolled around the actuator **1802**, and the register vent **1800** is open and rigid enough to be pushed into the vent opening by the actuator **1802** when the actuator **1802** rotates to unroll the curtain **1801**. In one embodiment, the actuator **1802** is configured to

[**0101**] **FIG. 19** is a block diagram of a control algorithm **1900** for controlling the register vents. For purposes of explanation, and not by way of limitation, the algorithm **1900** is described herein as running on the central system. However, one of ordinary skill in the art will recognize that the algorithm **1900** can be run by the central system, by the

zone thermostat, by the ECRV, or the algorithm **1900** can be distributed among the central system, the zone thermostat, and the ECRV. In the algorithm **1900**, in a block **1901** of the algorithm **1900**, the setpoint temperatures from one or more zone thermostats are provided to a calculation block **1902**. The calculation block **1902** calculates the register vent settings (e.g., how much to open or close each register vent) according to the zone temperature, the zone priority, the available heating and cooling air, the previous register vent settings, etc. as described above. In one embodiment, the block **1902** uses a predictive model as described above. In one embodiment, the block **1902** calculates the register vent settings for each zone independently (e.g., without regard to interactions between zones). In one embodiment, the block **1902** calculates the register vent settings for each zone in a coupled-zone manner that includes interactions between zones. In one embodiment, the calculation block **1902** calculates new vent openings by taking into account the current vent openings and in a manner configured to minimize the power consumed by opening and closing the register vents.

[**0102**] Register vent settings from the block **1902** are provided to each of the register vent actuators in a block **1903**, wherein the register vents are moved to new opening positions as desired (and, optionally, one or more of the fans **402** are turned on to pull additional air from desired ducts). After setting the new vent openings in the block **1903**, the process advances to a block **1904** where new zone temperatures are obtained from the zone thermostats (the new zone temperatures being responsive to the new register vent settings made in block **1903**). The new zone temperatures are provided to an adaptation input of the block **1902** to be used in adapting a predictive model used by the block **1902**. The new zone temperatures also provided to a temperature input of the block **1902** to be used in calculating new register vent settings.

[**0103**] As described above, in one embodiment, the algorithm used in the calculation block **1902** is configured to predict the ECRV opening needed to bring each zone to the desired temperature based on the current temperature, the available heating and cooling, the amount of air available through each ECRV, etc. The calculating block uses the prediction model to attempt to calculate the ECRV openings needed for relatively long periods of time in order to reduce the power consumed in unnecessarily by opening and closing the register vents. In one embodiment, the ECRVs are battery powered, and thus reducing the movement of the register vents extends the life of the batteries. In one embodiment, the block **1902** uses a predictive model that learns the characteristics of the HVAC system and the various zones and thus the model prediction tends to improve over time.

[**0104**] In one embodiment, the zone thermostats report zone temperatures to the central system and/or the ECRVs at regular intervals. In one embodiment, the zone thermostats report zone temperatures to the central system and/or the ECRVs after the zone temperature has changed by a specified amount specified by a threshold value. In one embodiment, the zone thermostats report zone temperatures to the central system and/or the ECRVs in response to a request instruction from the central system or ECRV.

[**0105**] In one embodiment, the zone thermostats report setpoint temperatures and zone priority values to the central system or ECRVs whenever the occupants change the setpoint temperatures or zone priority values using the user controls **1102**. In one embodiment, the zone thermostats report setpoint temperatures and zone priority values to the central system or ECRVs in response to a request instruction from the central system or ECRVs.

[**0106**] In one embodiment, the occupants can choose the thermostat deadband value (e.g., the hysteresis value) used by the calculation block **1902**. A relatively larger deadband value reduces the movement of the register vent at the expense of larger temperature variations in the zone.

[**0107**] In one embodiment, the ECRVs report sensor data (e.g., duct temperature, airflow, air velocity, power status, actuator position, etc.) to the central system and/or the zone thermostats at regular intervals. In one embodiment, the ECRVs report sensor data to the central system and/or the zone thermostats whenever the sensor data fails a threshold test (e.g., exceeds a threshold value, falls below a threshold value, falls inside a threshold range, or falls outside a threshold range, etc.). In one embodiment, the ECRVs report sensor data to the central system and/or the zone thermostats in response to a request instruction from the central system or zone thermostat.

[**0108**] In one embodiment, the fans **402** can be used as generators to provide power to recharge the power source **404** in the ECRV. However, using the fan **402** in such a manner restricts airflow through the ECRV. In one embodiment, the controller **401** calculates a vent opening for the ECRV to produce the desired amount of air through the ECRV while using the fan to generate power to recharge the power source **404** (thus, in such circumstance) the controller would open the vanes more than otherwise necessary in order to compensate for the air resistance of the generator fan **402**. In one embodiment, in order to save power in the ECRV, rather than increase the vane opening, the controller **401** can use the fan as a generator. The controller **401** can direct the power generated by the fan **402** into one or both of the power sources **404**, **405**, or the controller **401** can dump the excess power from the fan into a resistive load. In one embodiment, the controller **401** makes decisions regarding vent opening versus fan usage. In one embodiment, the central system instructs the controller **401** when to use the vent opening and when to use the fan. In one embodiment, the controller **401** and central system negotiate vent opening versus fan usage.

[**0109**] In one embodiment, the ECRV reports its power status to the central system or zone thermostat. In one embodiment the central system or zone thermostat takes such power status into account when determining new ECRV openings. Thus, for example, if there are first and second ECRVs serving one zone and the central system knows that the first ECRVs is low on power, the central system will use the second ECRV to modulate the air into the zone. If the first ECRV is able to use the fan **402** or other airflow-based generator to generate electrical power, the central system will instruct the second ECRV to a relatively closed position in and direct relatively more airflow through the first ECRV when directing air into the zone.

[**0110**] In one embodiment, the central system is shown in **FIGS. 7-9** is implemented in a distributed fashion in the zone thermostats **1100** and/or in the ECRVs. In the distributed system, the central system does not necessarily exists as

a distinct device, rather, the functions of the central system can be are distributed in the zone thermostats **1100** and/or the ECRVs. Thus, in a distributed system, **FIGS. 7-9** represent a conceptual/computational model of the system. For example, in a distributed system, each zone thermostat **100** knows its zone priority, and the zone thermostats **1100** in the distributed system negotiate to allocate the available heating/cooling air among the zones. In one embodiment of a distributed system, one of the zone thermostat assumes the role of a master thermostat that collects data from the other zone thermostats and implements the calculation block **1902**. In one embodiment of a distributed system, the zone thermostats operate in a peer-to-peer fashion, and the calculation block **1902** is implemented in a distributed manner across a plurality of zone thermostats and/or ECRVs.

[**0111**] It will be evident to those skilled in the art that the invention is not limited to the details of the foregoing illustrated embodiments and that the present invention may be embodied in other specific forms without departing from the spirit or essential attributed thereof; furthermore, various omissions, substitutions and changes may be made without departing from the spirit of the inventions. For example, although specific embodiments are described in terms of the 900 MHz frequency band, one of ordinary skill in the art will recognize that frequency bands above and below 900 MHz can be used as well. The wireless system can be configured to operate on one or more frequency bands, such as, for example, the HF band, the VHF band, the UHF band, the Microwave band, the Millimeter wave band, etc. One of ordinary skill in the art will further recognize that techniques other than spread spectrum can also be used and/or can be used instead spread spectrum. The modulation uses is not limited to any particular modulation method, such that modulation scheme used can be, for example, frequency modulation, phase modulation, amplitude modulation, combinations thereof, etc. The one or more of the wireless communication systems described above can be replaced by wired communication. The one or more of the wireless communication systems described above can be replaced by powerline networking communication. The foregoing description of the embodiments is, therefore, to be considered in all respects as illustrative and not restrictive, with the scope of the invention being delineated by the appended claims and their equivalents.

What is claimed is:

1. A zone thermostat, comprising:

a controller;

a temperature sensor provided to said controller, said temperature sensor configured to measure a temperature of air in a first zone;

a display;

at least one user input device; and

a communication system provided to said controller; said controller configured to communicate temperature readings to a central system in response to a first query from said central system, said at least one user input device configured to allow a user to specify a zone setpoint temperature and a zone priority, said controller configured to communicate said zone setpoint temperature and said zone priority to said central system in response to a second query from said central system.

2. The zone thermostat of claim 1, said controller further configured to relay communications between said central system and one or more electronically-controlled register vents configured to provide air to said first zone.

3. The zone thermostat of claim 1, wherein said controller is configured to transmit sensor data according to a threshold test.

4. The zone thermostat of claim 8, wherein said threshold test comprises a high threshold level.

5. The zone thermostat of claim 8, wherein said threshold test comprises a low threshold level.

6. The zone thermostat of claim 8, wherein said threshold test comprises an inner threshold range.

7. The zone thermostat of claim 8, wherein said threshold test comprises an outer threshold range.

8. The zone thermostat of claim 1, wherein controller is configured to receive an instruction to change a status reporting interval.

9. The zone thermostat of claim 1, wherein controller is configured to receive an instruction to change a sensor data reporting interval.

10. The zone thermostat of claim 1, wherein said zone thermostat is configured to monitor a status of one or more electronically-controlled register vents.

11. The zone thermostat of claim 1, wherein said wireless communication system comprises a wireless communication system.

12. The zone thermostat of claim 11, wherein said wireless communication system communicates comprises an infrared communication system.

13. The zone thermostat of claim 11, wherein said wireless communication system comprises an ultrasonic communication system.

14. The zone thermostat of claim 11, wherein said wireless communication comprises a radio-frequency communication system.

15. The zone thermostat of claim 1, wherein said communication system comprises a frequency-hopping system.

16. The zone thermostat of claim 1, wherein said communication system communicates using a 900 megahertz band.

17. The zone thermostat of claim 1, further comprising a visual indicator to indicate a low-power condition.

18. The zone thermostat of claim 1, said controller configured to use a predictive model to compute a control program for an electronically-controlled register vent.

19. The zone thermostat of claim 18, said control program configured to reduce power consumption by said electronically-controlled register vent.

20. The zone thermostat of claim 18, said control program configured to reduce movement of at least one actuator in said electronically-controlled register vent.

21. The zone thermostat of claim 18, said zone thermostat configured to use a predictive model to compute a control program for said electronically-controlled register vent.

22. The zone thermostat of claim 1, said controller configured to send data to an electronically-controlled register vent.

23. The zone thermostat of claim 1, said zone thermostat configured to send setpoint data to said controller.

24. The zone thermostat of claim 1, said zone thermostat configured to send humidity data to said controller.

25. The zone thermostat of claim 1, said zone thermostat configured to send zone temperature slope data to said controller.

26. The zone thermostat of claim 1, further comprising a remote control interface.

27. The zone thermostat of claim 1, said zone thermostat further comprising an occupant sensor.

28. The zone thermostat of claim 1, said zone thermostat further comprising a light switch, said zone thermostat and said light switch configured to be installed in a standard electrical wall switch enclosure.

29. A zone thermostat, comprising:

a controller;

a temperature sensor provided to said controller, said temperature sensor configured to measure a temperature of air in a first zone;

a display;

at least one user input device; and

a communication system provided to said controller; said controller configured to communicate temperature readings to a zone control system in response to a first query from said zone control system, said at least one user input device configured to allow a user to specify a zone setpoint temperature and a zone priority, said controller configured to communicate said zone setpoint temperature and said zone priority to said zone control system in response to a second query from said zone control system.

30. The zone thermostat of claim 29, wherein said zone control system comprises a central system.

31. The zone thermostat of claim 29, said wherein said zone control system comprises a distributed system.

32. The zone thermostat of claim 29, said wherein said zone control system comprises a distributed system of zone thermostats.

33. The zone thermostat of claim 29, said wherein said zone control system comprises a distributed system of zone thermostats and electronically-controlled register vents.

34. The zone thermostat of claim 29, wherein controller is configured to receive an instruction to change a status reporting interval.

35. The zone thermostat of claim 29, wherein controller is configured to receive an instruction to change a sensor data reporting interval.

36. The zone thermostat of claim 29, wherein said zone thermostat is configured to monitor a status of one or more electronically-controlled register vents.

37. The zone thermostat of claim 29, wherein said communication system comprises a wireless communication system.

38. The zone thermostat of claim 29, wherein said communication system communicates comprises an infrared communication system.

39. The zone thermostat of claim 29, wherein said communication system comprises an ultrasonic communication system.

40. The zone thermostat of claim 29, wherein said communication comprises a radio-frequency communication system.

41. The zone thermostat of claim 29, wherein said communication system comprises a frequency-hopping system.

42. The zone thermostat of claim 29, wherein said communication system communicates using a 900 megahertz band.

43. The zone thermostat of claim 29, further comprising a visual indicator to indicate a low-power condition.

44. The zone thermostat of claim 29, said controller configured to use a predictive model to compute a control program for an electronically-controlled register vent.

45. The zone thermostat of claim 29, said control program configured to reduce power consumption by said electronically-controlled register vent.

46. The zone thermostat of claim 29, said control program configured to reduce movement of at least one actuator in said electronically-controlled register vent.

47. The zone thermostat of claim 29, said zone thermostat configured to use a predictive model to compute a control program for said electronically-controlled register vent.

48. The zone thermostat of claim 29, said controller configured to send data to an electronically-controlled register vent.

49. The zone thermostat of claim 29, said zone thermostat configured to send setpoint data to said controller.

50. The zone thermostat of claim 29, said zone thermostat configured to send humidity data to said controller.

51. The zone thermostat of claim 29, said zone thermostat configured to send zone temperature slope data to said controller.

52. The zone thermostat of claim 29, further comprising a remote control interface.

53. The zone thermostat of claim 29, said zone thermostat further comprising an occupant sensor.

54. The zone thermostat of claim 29, said zone thermostat further comprising a light switch, said zone thermostat and said light switch configured to be installed in a standard electrical wall switch enclosure.

* * * * *