EXHIBIT 1006

US 20180036017A1

(19) **United States**

(12) **Patent Application Publication** (10) **Pub. No.: US 2018/0036017 A1**

Donner et al. (43) **Pub. Date: Feb. 8, 2018**

(54) **SYSTEMS FOR AND METHODS OF PREPARING A SACROILIAC JOINT FOR FUSION**

(71) Applicant: **JCBD, LLC**, Fort Collins, CO (US)

(72) Inventors: **Edward Jeffrey Donner**, Fort Collins, CO (US); **Christopher Thomas Donner**, Fort Collins, CO (US)

(73) Assignee: **JCBD, LLC**, Fort Collins, CO (US)

(21) Appl. No.: **15/785,997**

(22) Filed: **Oct. 17, 2017**

Related U.S. Application Data

(63) Continuation of application No. 14/514,221, filed on Oct. 14, 2014, now Pat. No. 9,826,986, which is a continuation-in-part of application No. 14/447,612, filed on Jul. 31, 2014, now Pat. No. 9,700,356.

(60) Provisional application No. 61/954,594, filed on Mar. 17, 2014, provisional application No. 61/914,409, filed on Dec. 11, 2013, provisional application No. 61/912,494, filed on Dec. 5, 2013, provisional application No. 61/891,345, filed on Oct. 15, 2013, provisional application No. 61/891,330, filed on Oct. 15, 2013, provisional application No. 61/979,857, filed on Apr. 15, 2014, provisional application No. 61/955,126, filed on Mar. 18, 2014, provisional application No. 61/914,409, filed on Dec. 11, 2013, provisional application No. 61/860,185, filed on Jul. 30, 2013.

Publication Classification

(51) **Int. Cl.**

A61B 17/16	(2006.01)
A61B 17/14	(2006.01)
A61B 17/17	(2006.01)
A61B 17/68	(2006.01)
A61F 2/30	(2006.01)
A61B 17/15	(2006.01)
A61B 17/92	(2006.01)

(52) **U.S. Cl.**

CPC ***A61B 17/1659*** (2013.01); ***A61B 17/1739*** (2013.01); ***A61B 17/144*** (2016.11); ***A61B 17/1604*** (2013.01); ***A61B 17/1735*** (2013.01); ***A61B 17/68*** (2013.01); ***A61B 17/149*** (2016.11); *A61B 17/1757* (2013.01); *A61B 17/15* (2013.01); *A61B 2017/922* (2013.01); *A61F 2002/30995* (2013.01)

(57) **ABSTRACT**

A method of surgically preparing a sacroiliac joint comprising: a) approaching a sacroiliac joint space with a joint preparation tool comprising a cutting element including an exterior having an asymmetric cutting band such that the first side includes a first surface having a first texture and the second side includes a second surface having a second texture, the first and second textures being different such that the first texture is substantially smoother than the second texture; and b) delivering at least a portion of the cutting element non-transversely into the sacroiliac joint space for decortication, the cutting element being oriented in the sacroiliac joint space such that the first surface opposes the generally softer sacrum and the second surface opposes the generally harder ilium in order to more aggressively prepare the surface of the ilium while not over-preparing the sacrum to provide a robust biologic environment for intra-articular fusion.

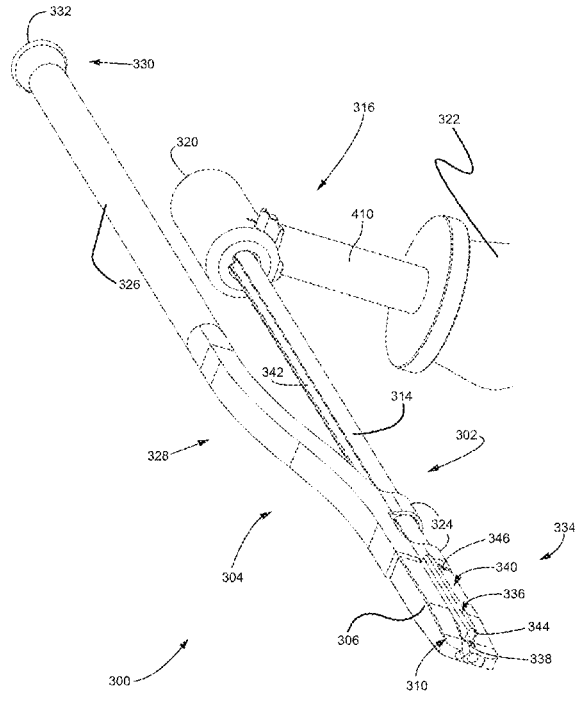

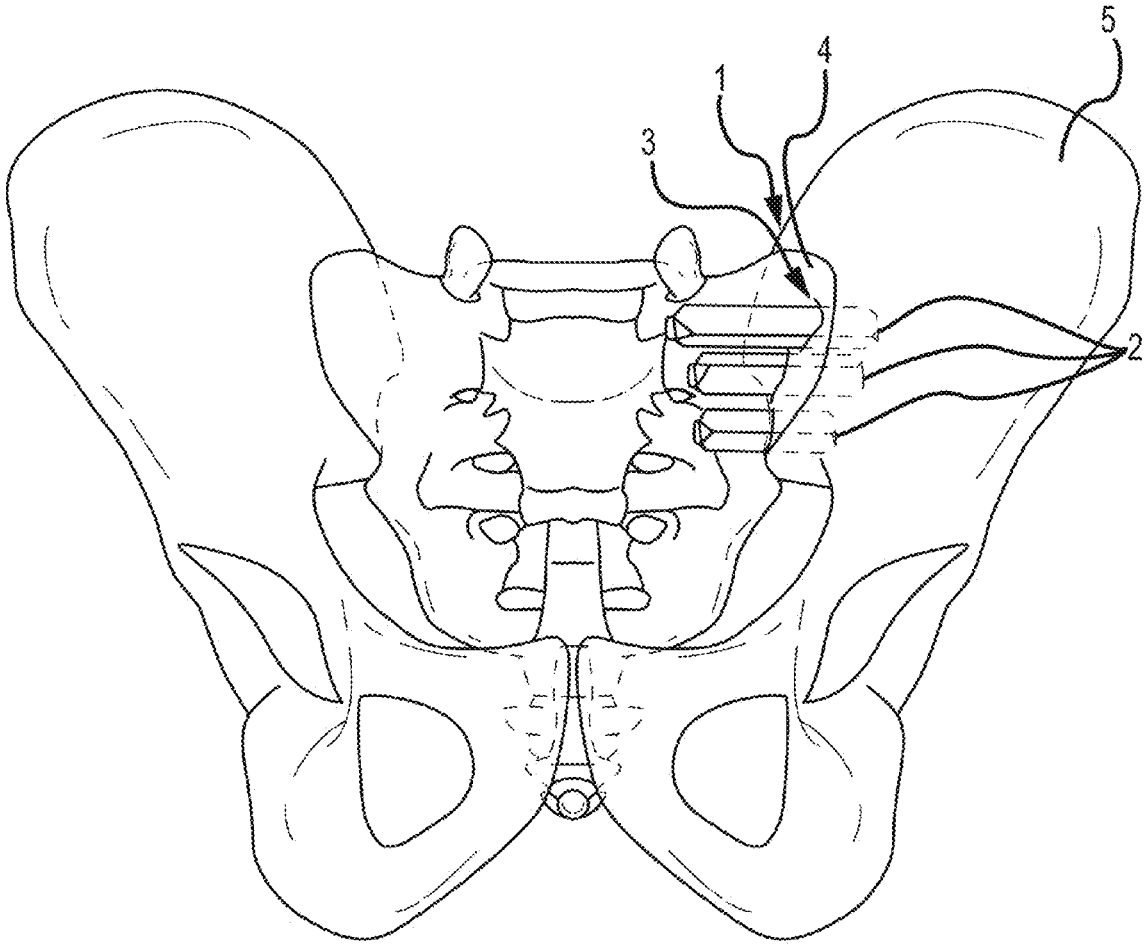

FIG.1
CONVENTIONAL ART

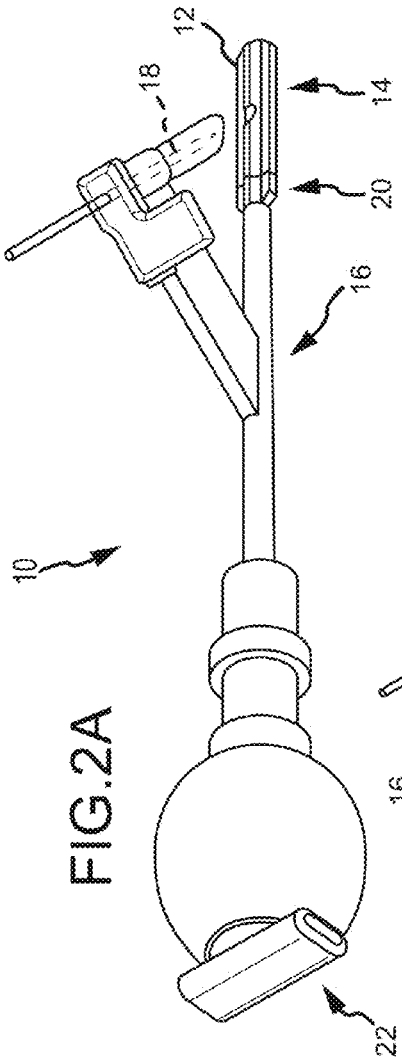

FIG.2A

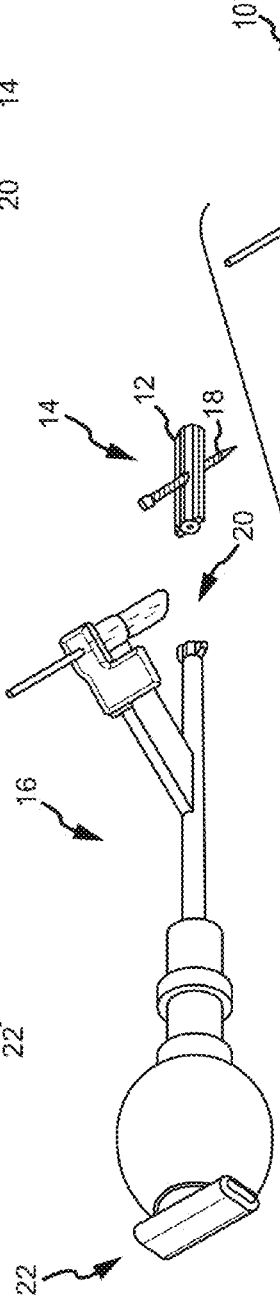

FIG.2B

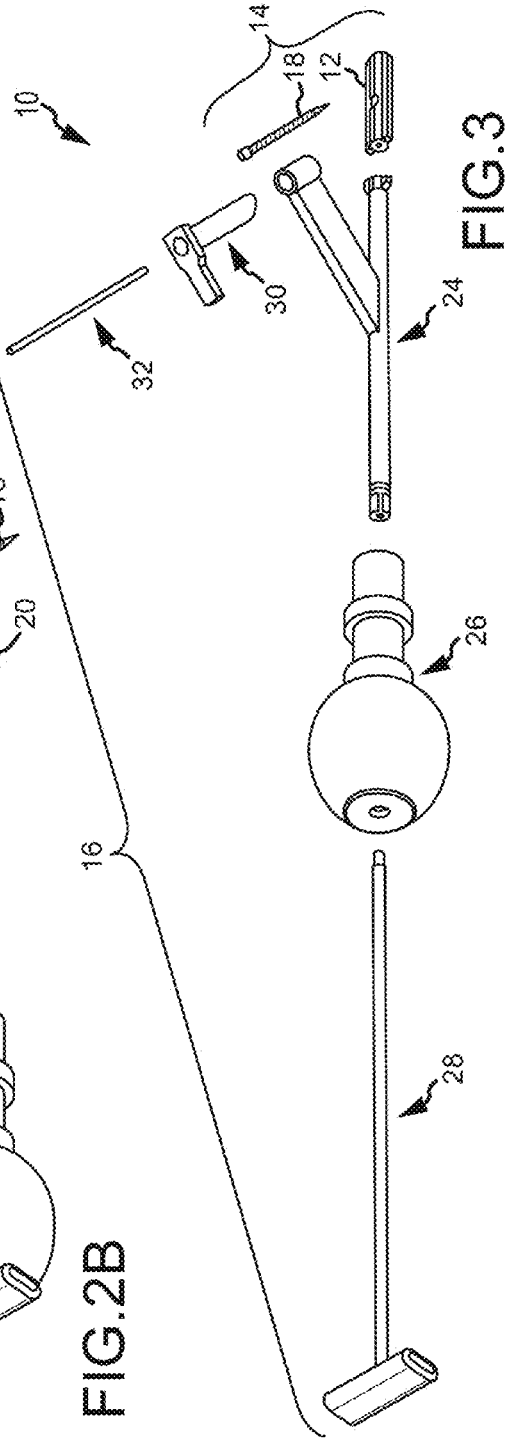

FIG.3

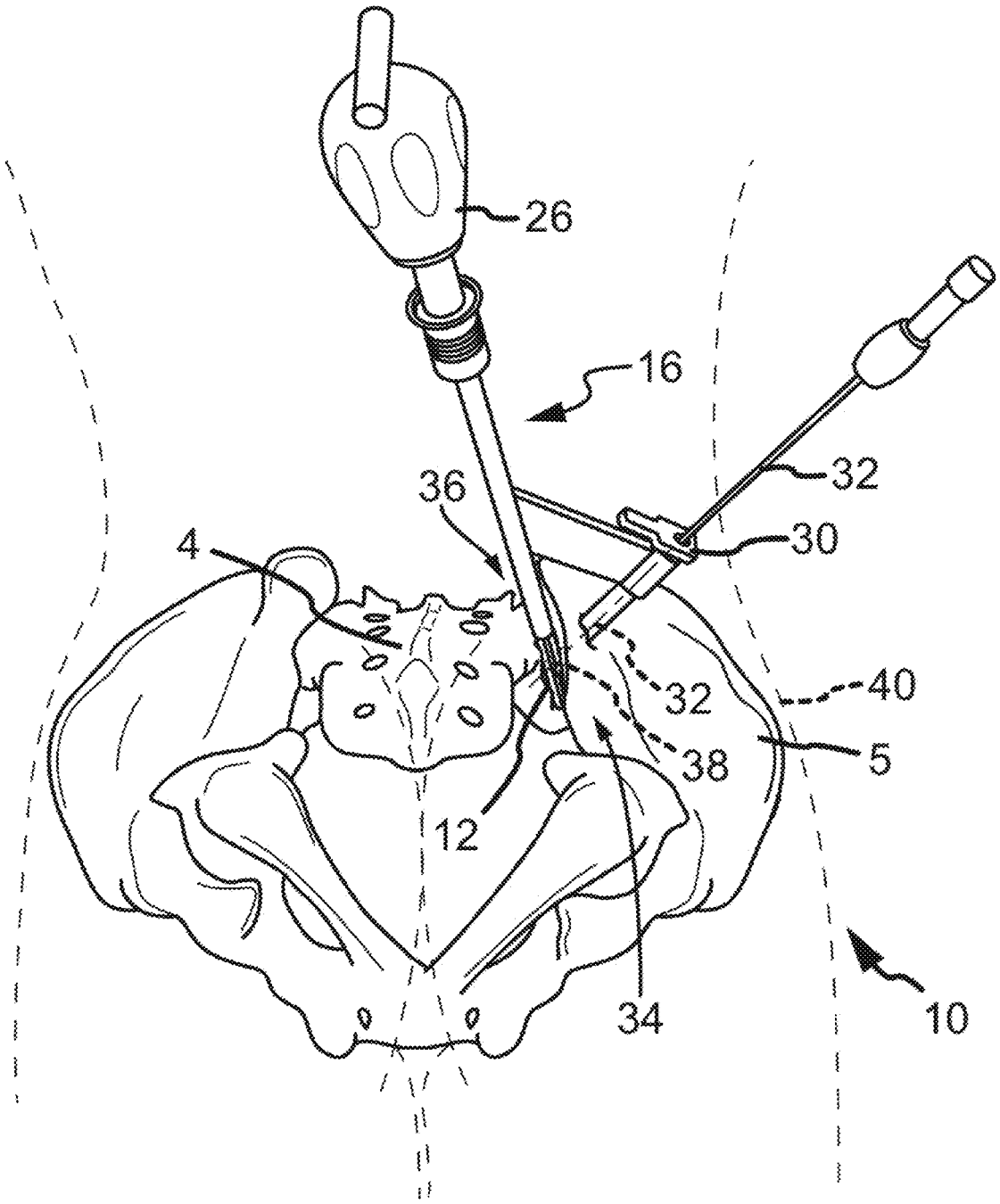

FIG. 4

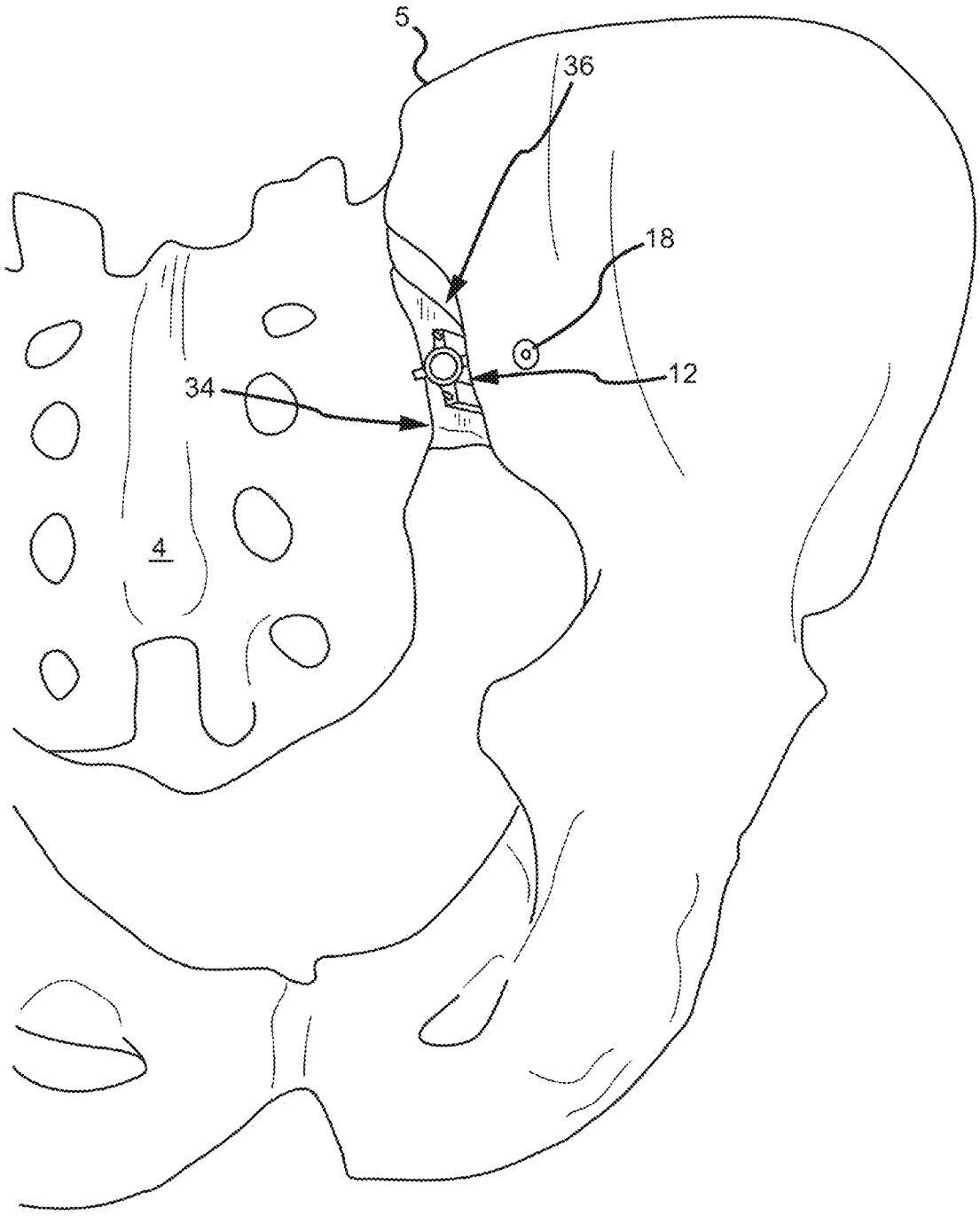

FIG. 5

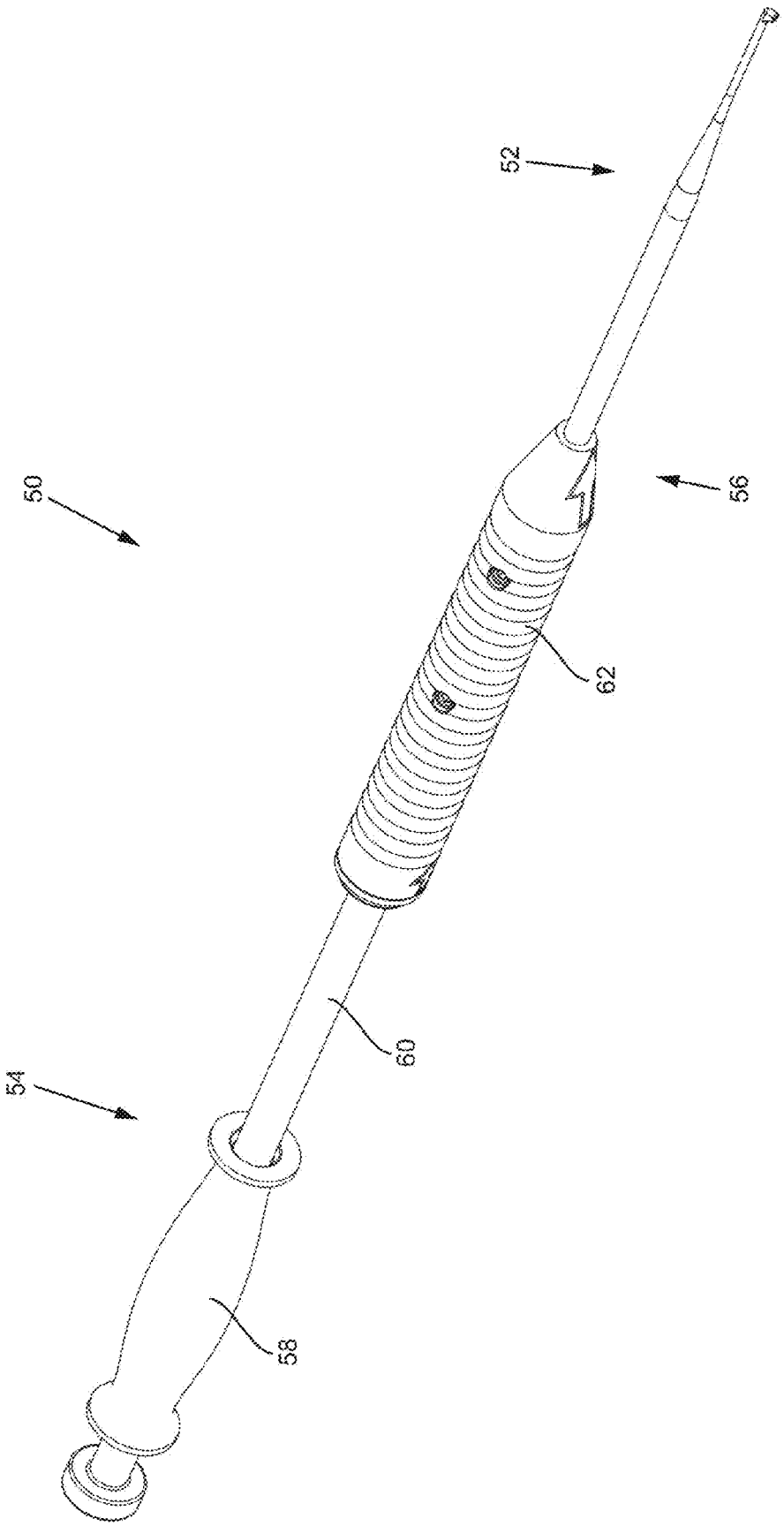

FIG. 6

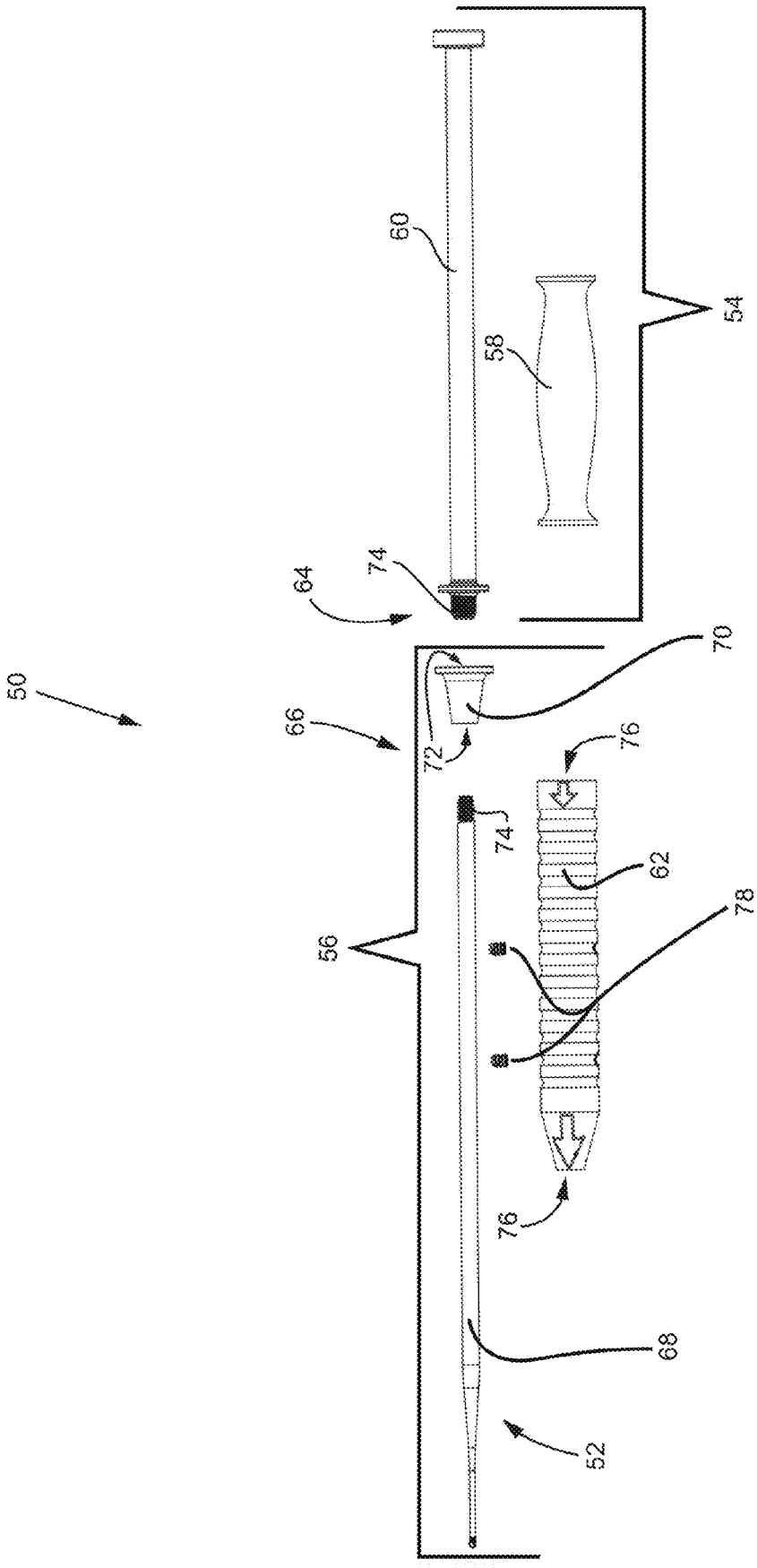

FIG. 7

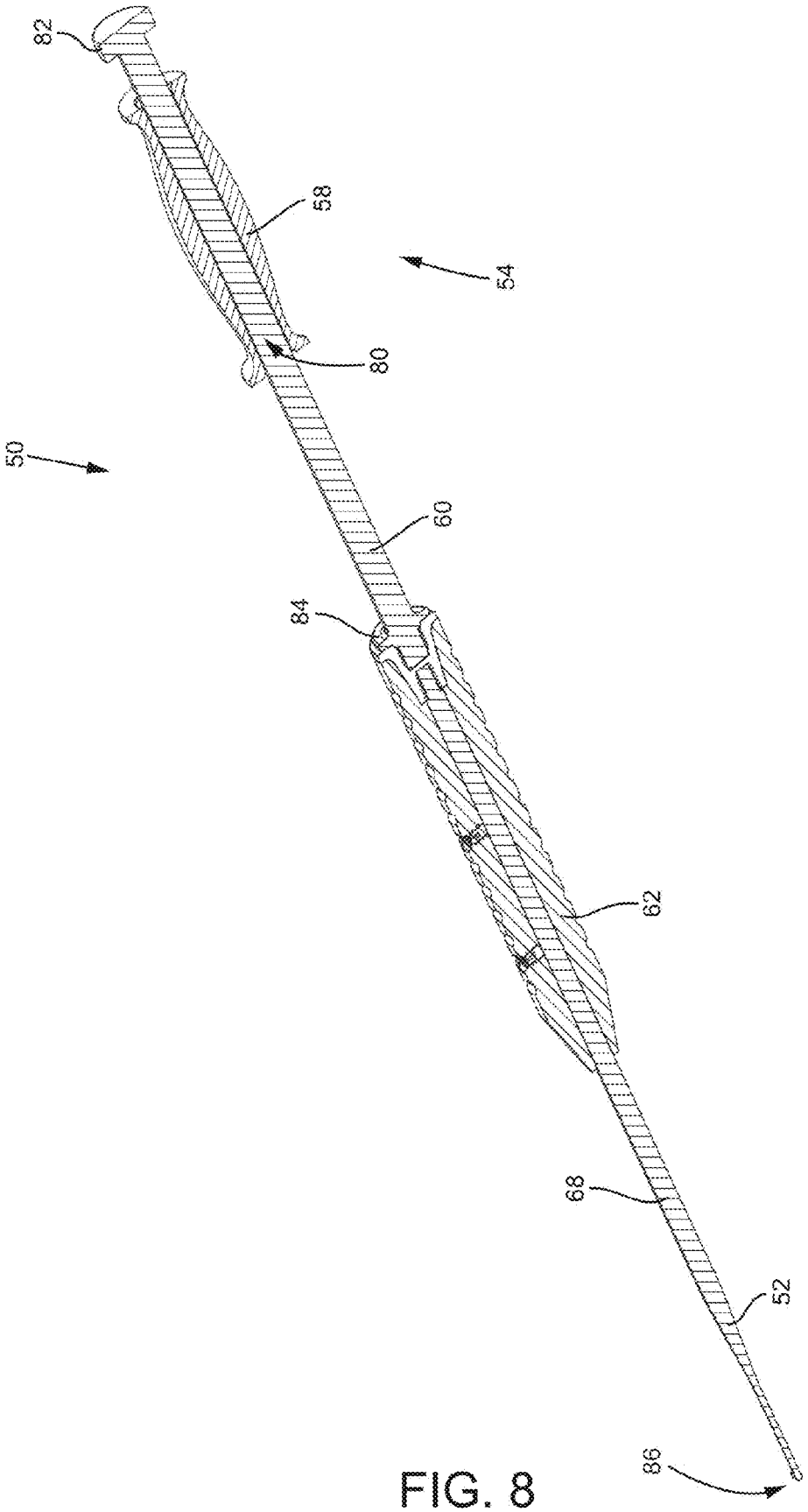

FIG. 8

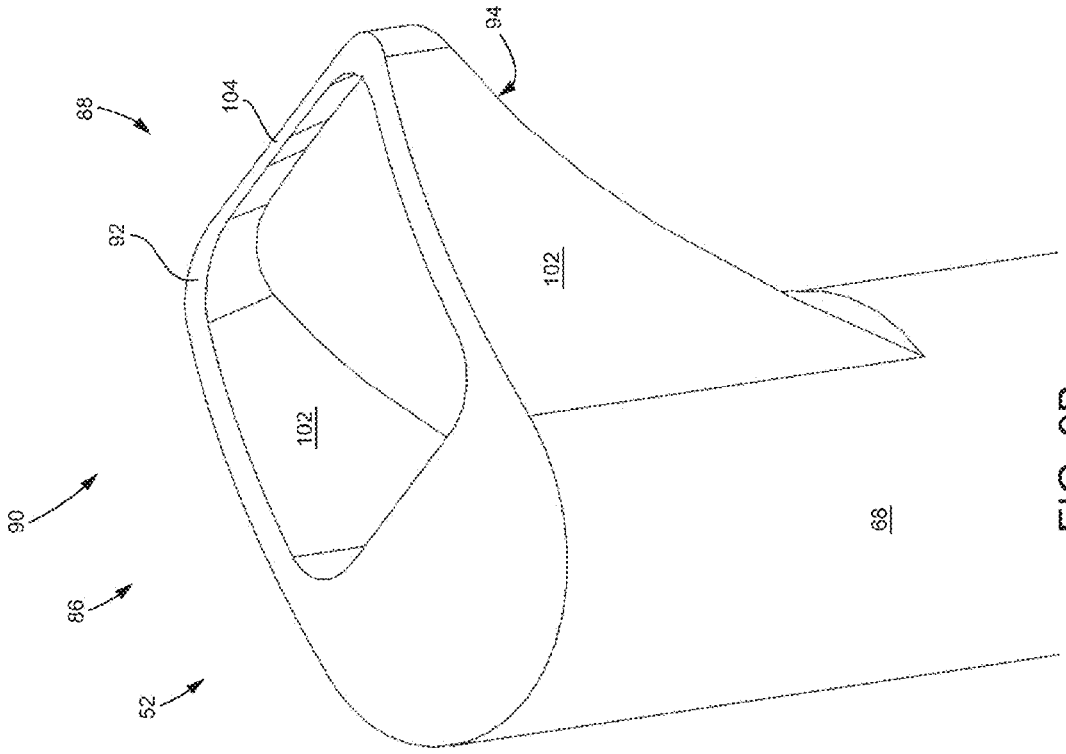
88
104
94
92
102
102
90
86
52
68

FIG. 9B

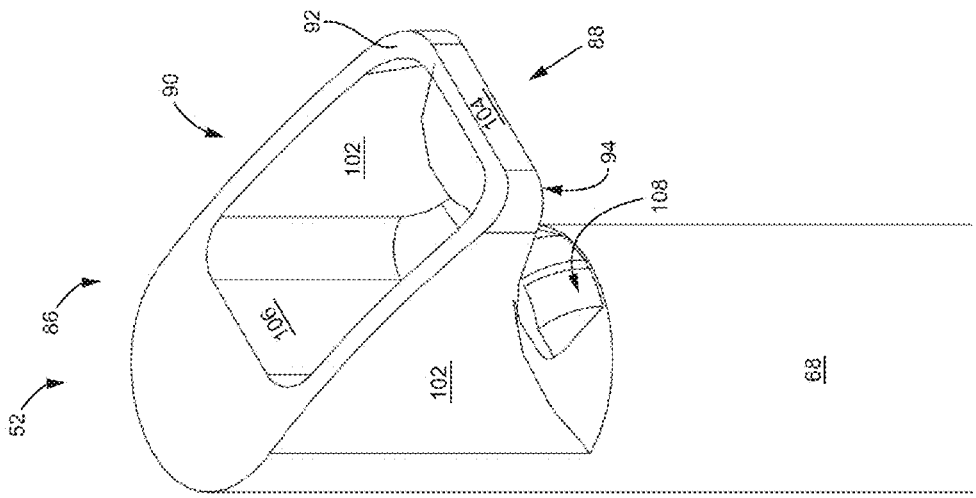
92
88
90
102
104
94
108
86
101
52
102
68

FIG. 9A

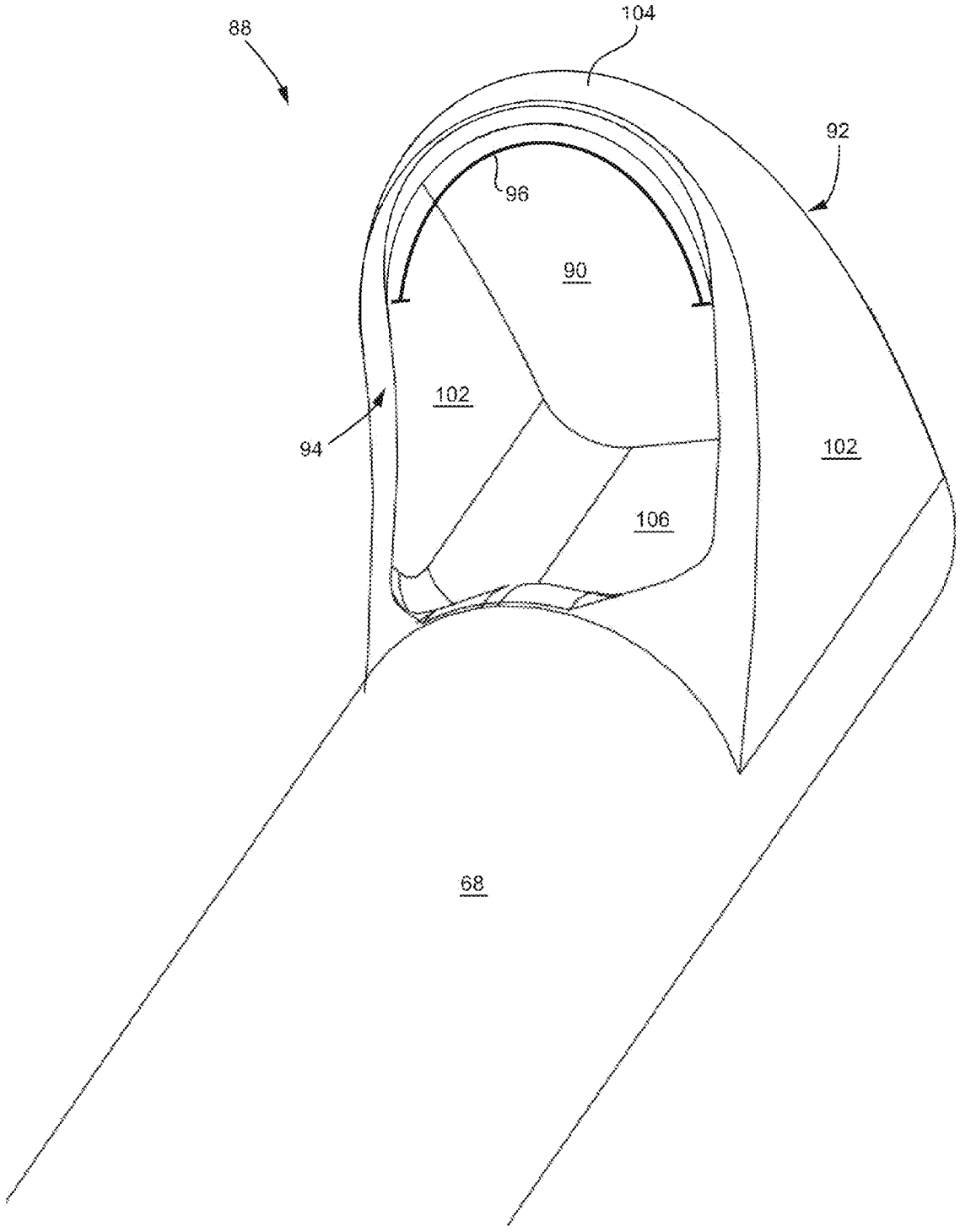

FIG. 10

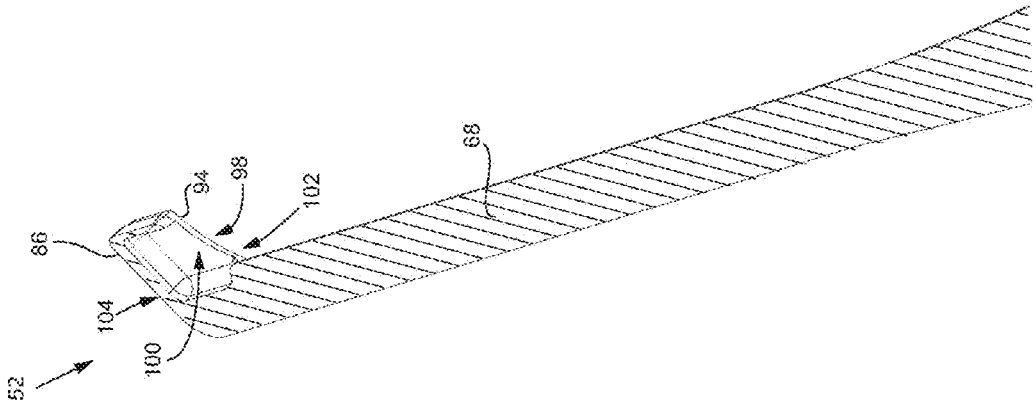

FIG. 12

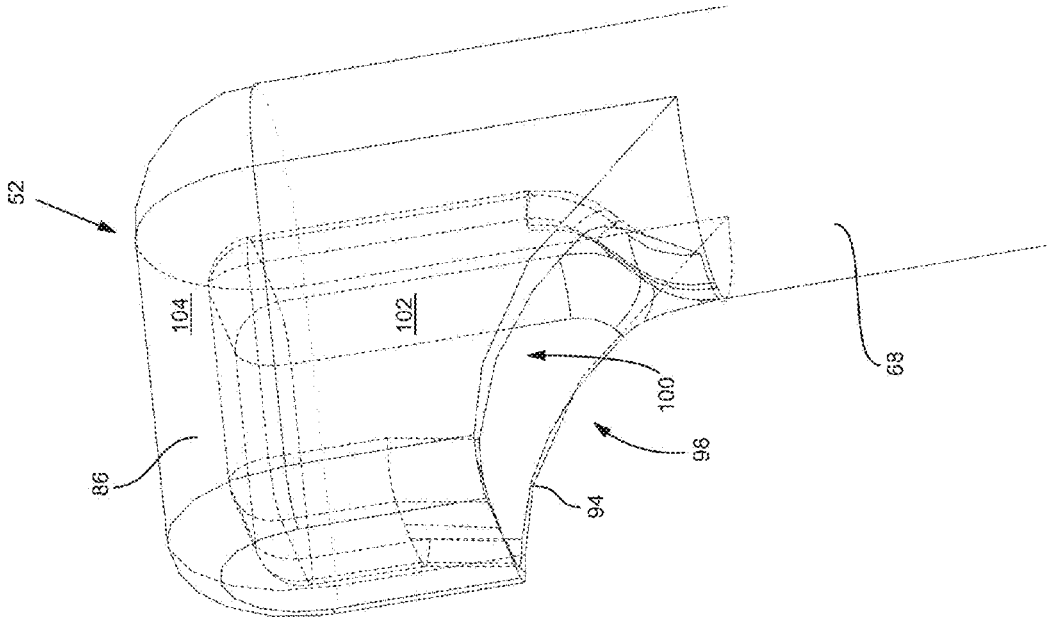

FIG. 11

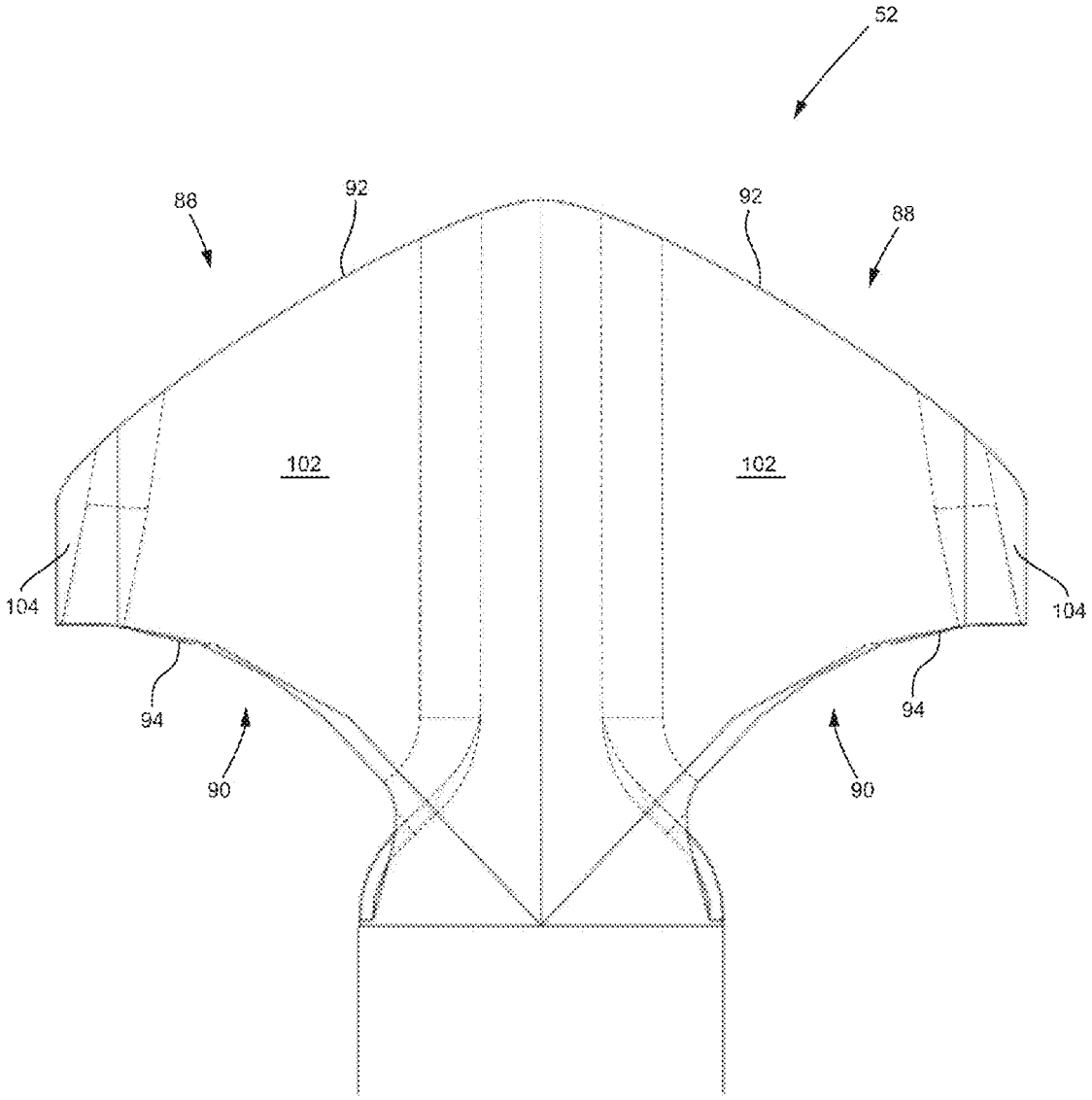

FIG. 13

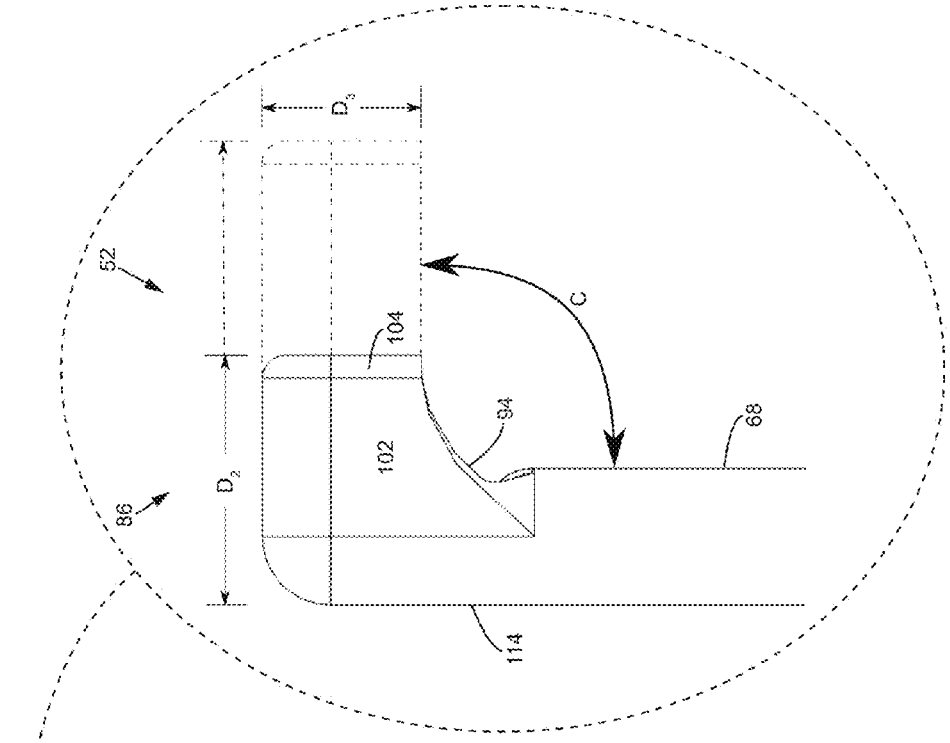

FIG. 14B

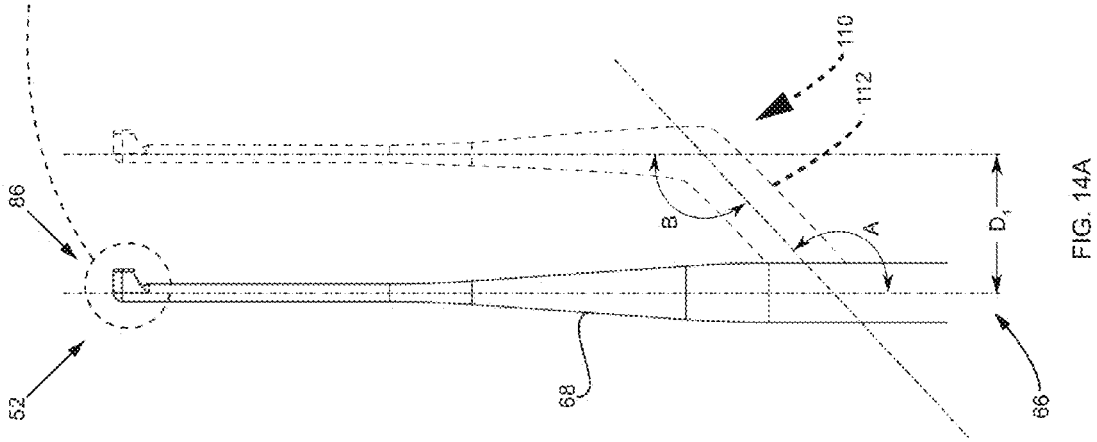

FIG. 14A

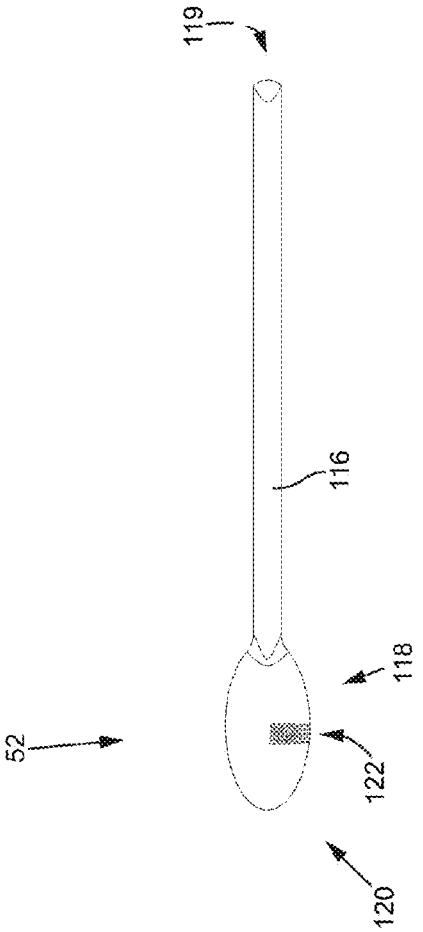

FIG. 15B

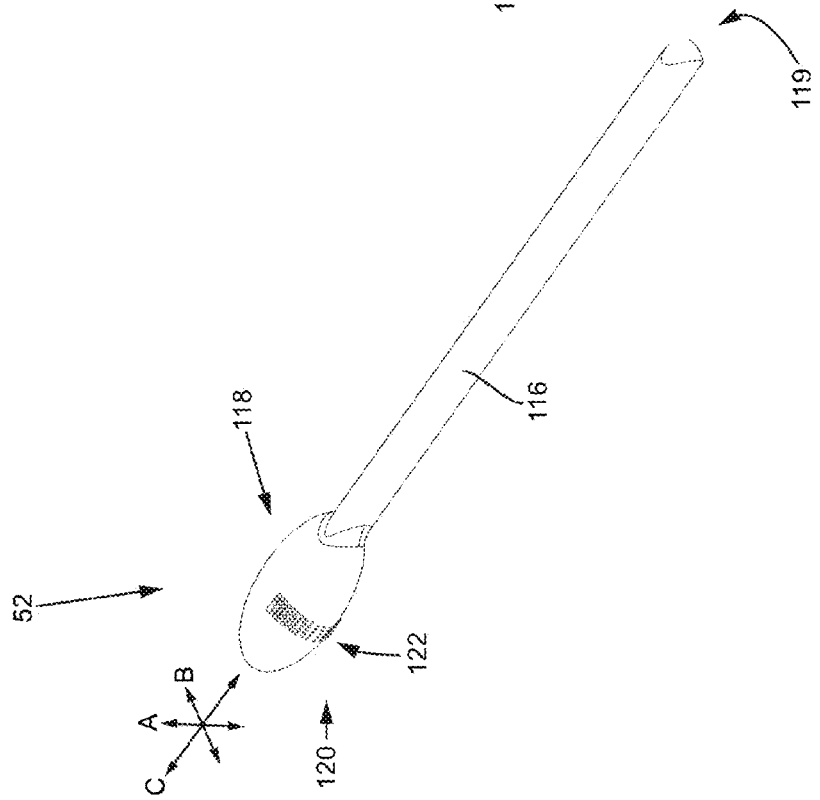

FIG. 15A

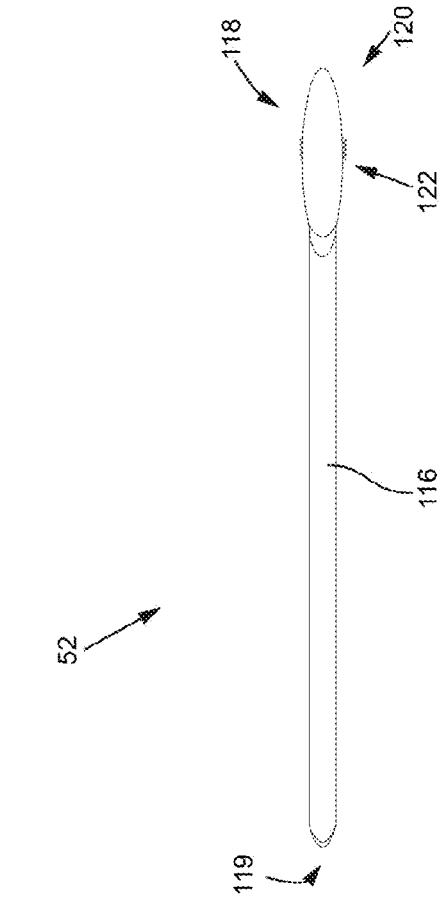

FIG. 15D

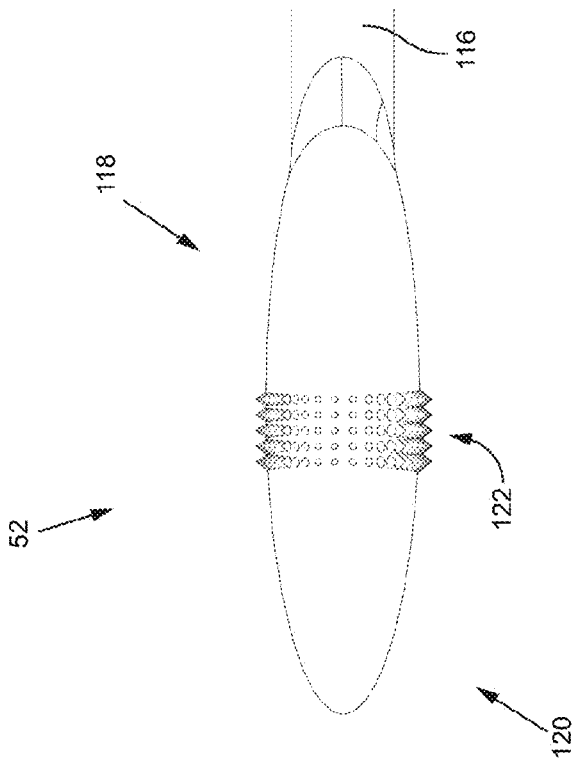

FIG. 15C

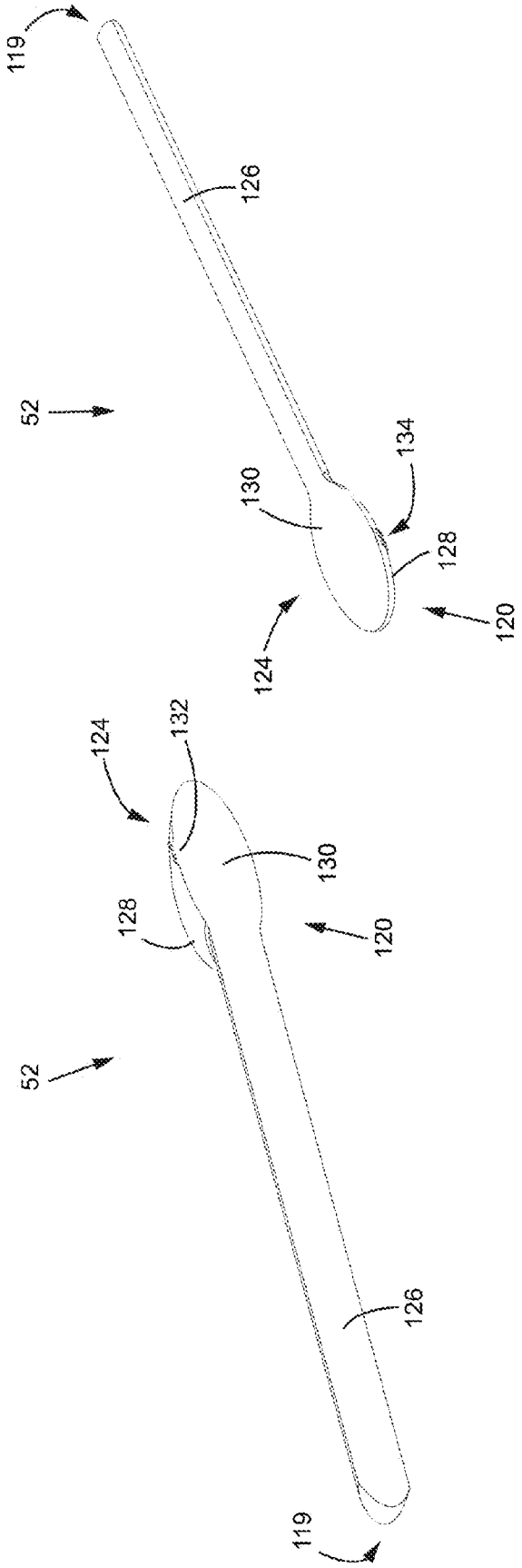

FIG. 17

FIG. 16

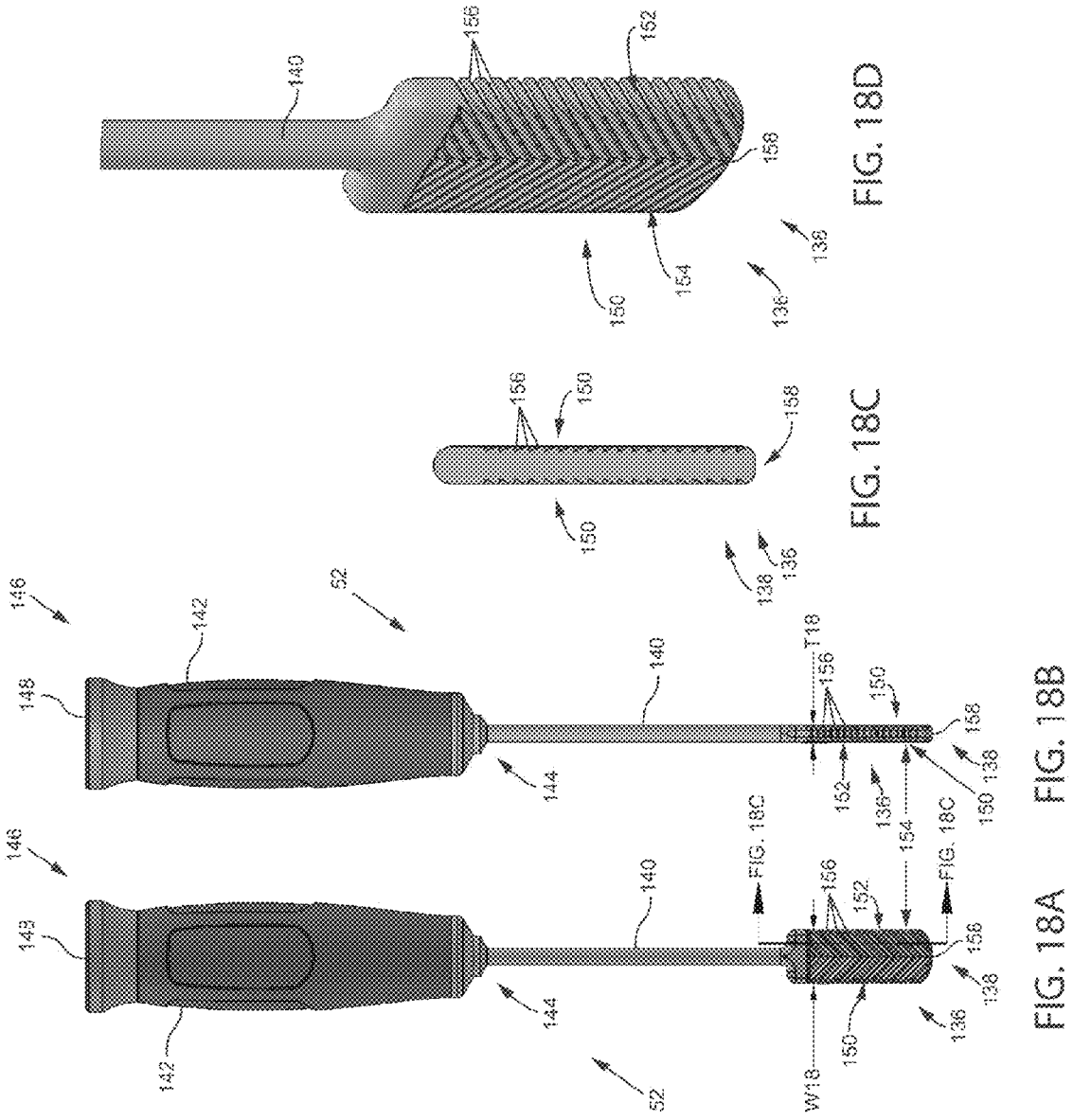

FIG. 18D

FIG. 18C

FIG. 18B

FIG. 18A

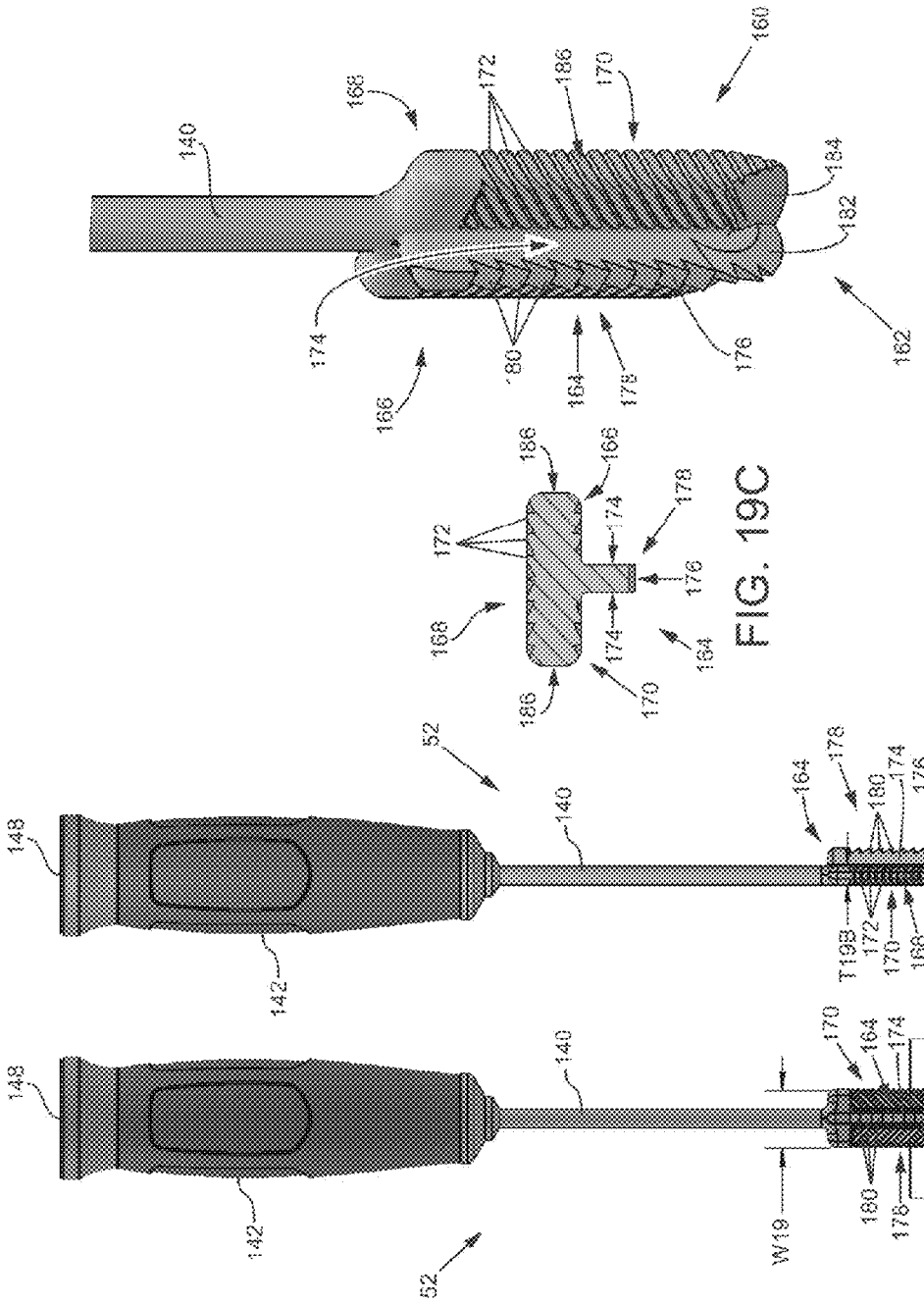

FIG. 19A FIG. 19B

FIG. 19C

FIG. 19D

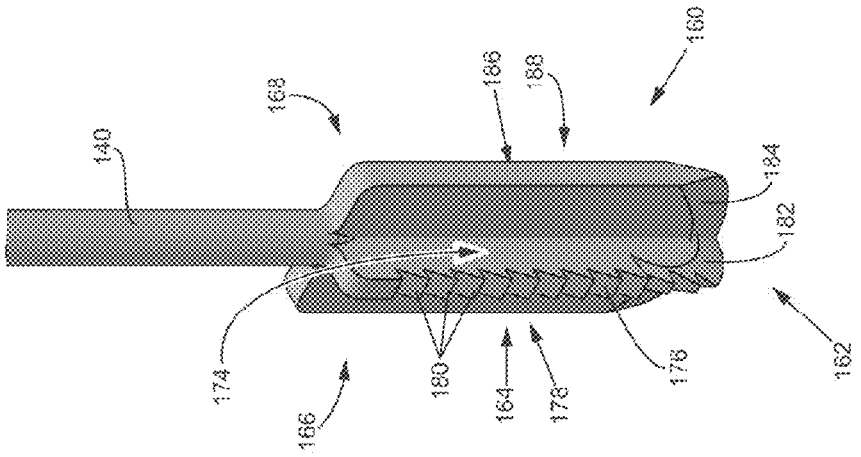

FIG. 20C

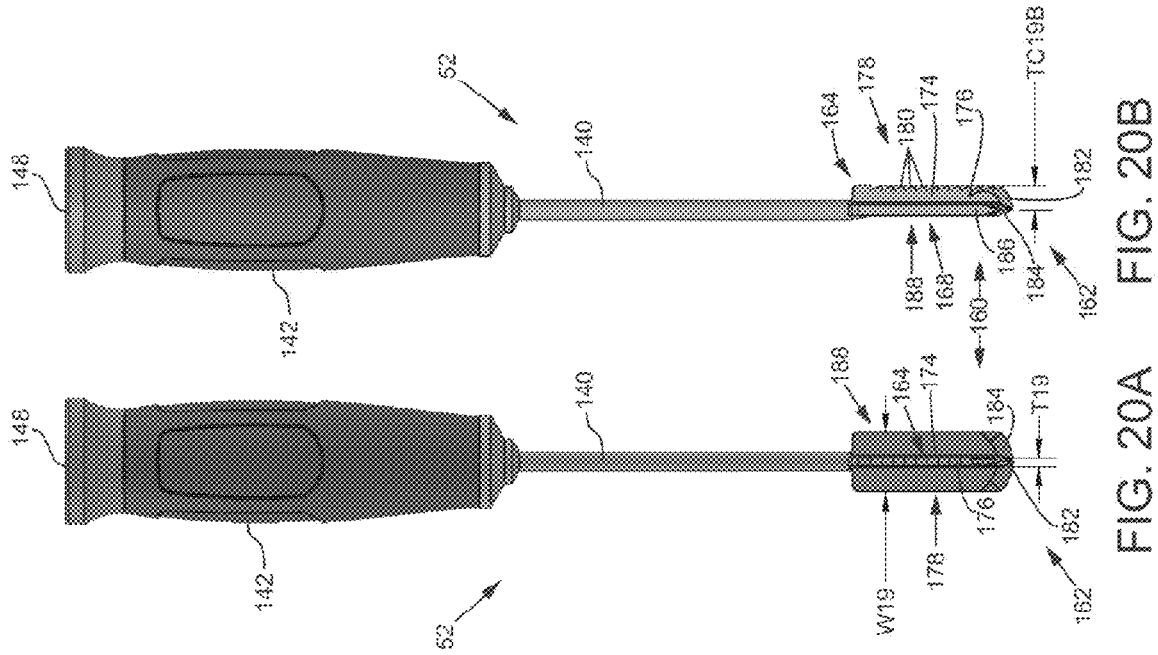

FIG. 20A FIG. 20B

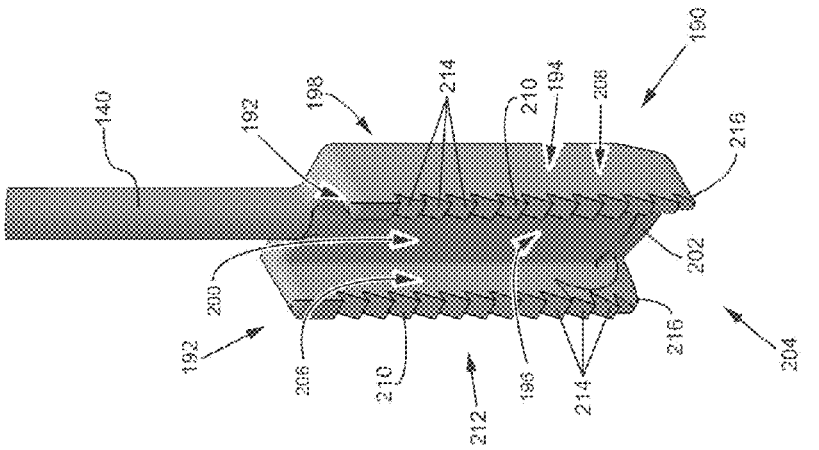

FIG. 21C

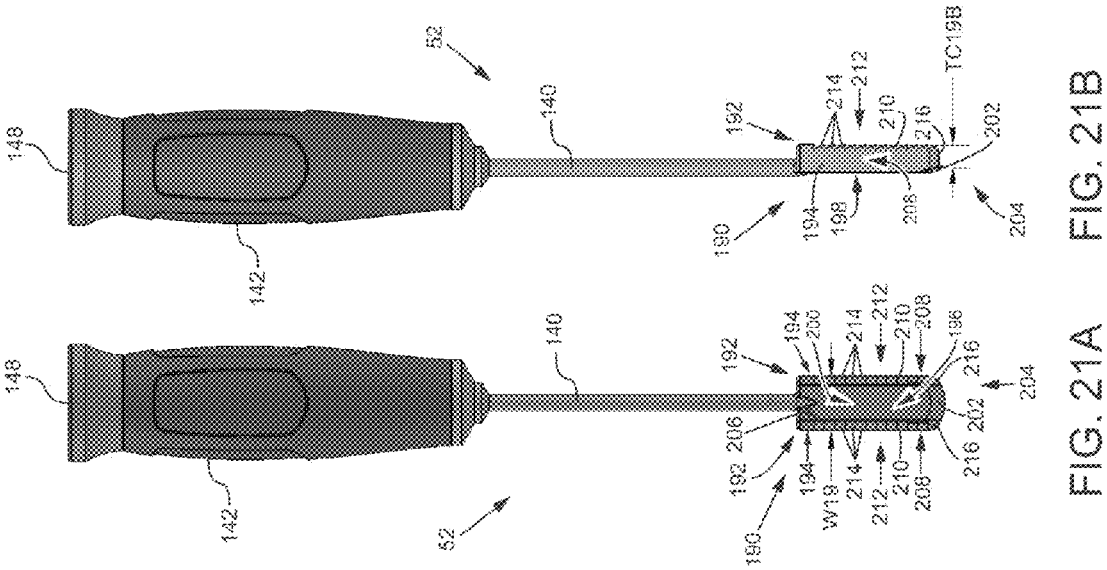

FIG. 21A FIG. 21B

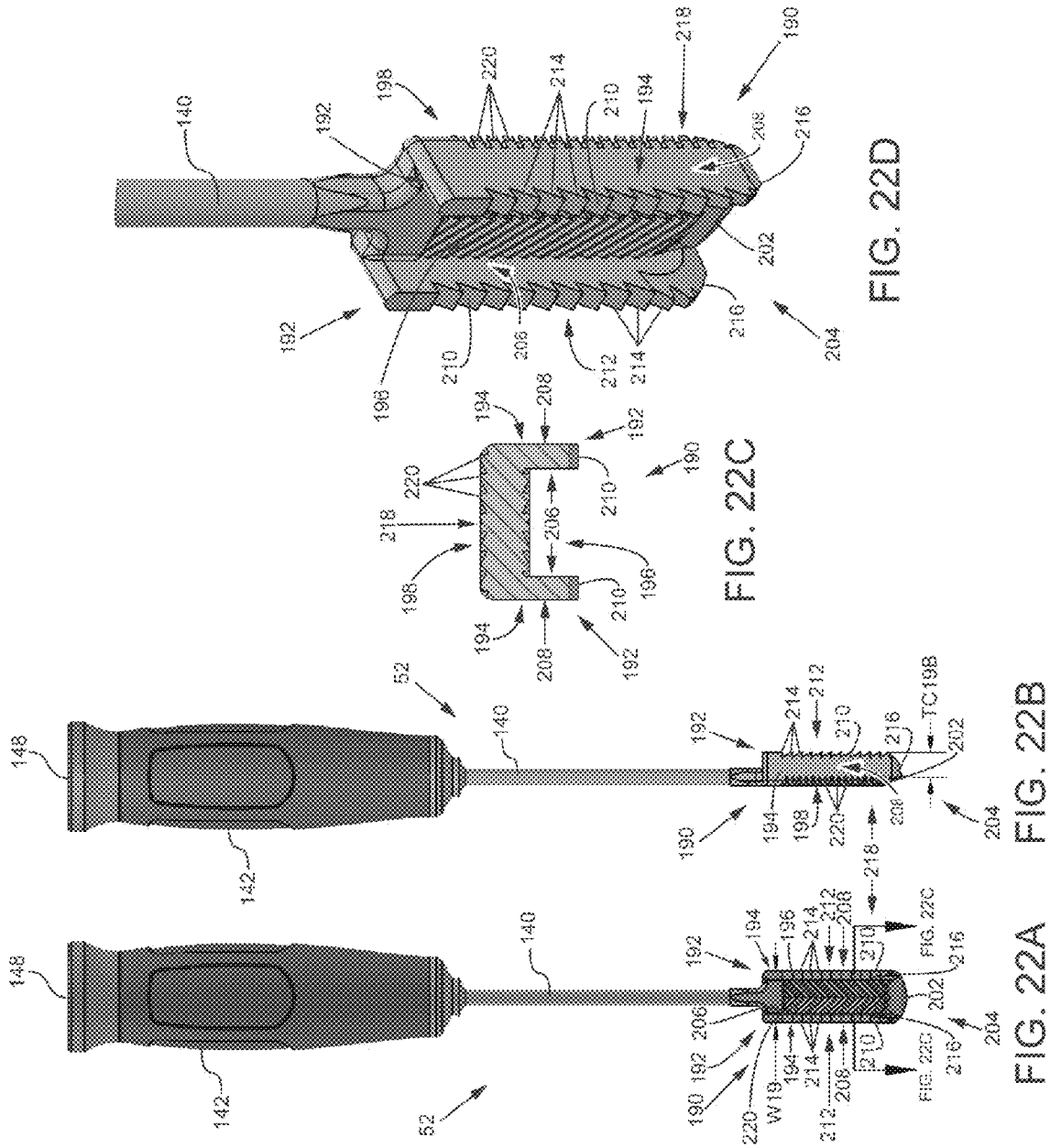
140
192
198
220
214
210
194
218
190
208
216
202
204
196
206
212
148
142
52
W19
FIG. 22C
FIG. 22D
FIG. 22A
FIG. 22B

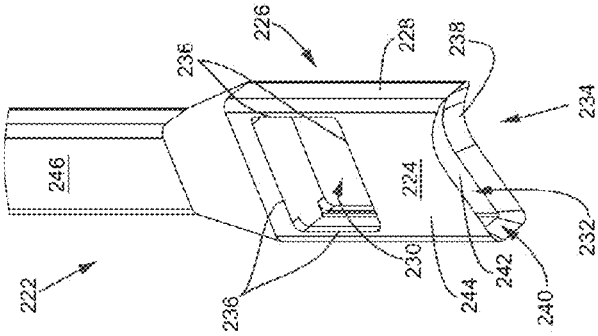

FIG. 23D

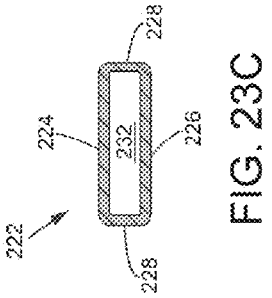

FIG. 23C

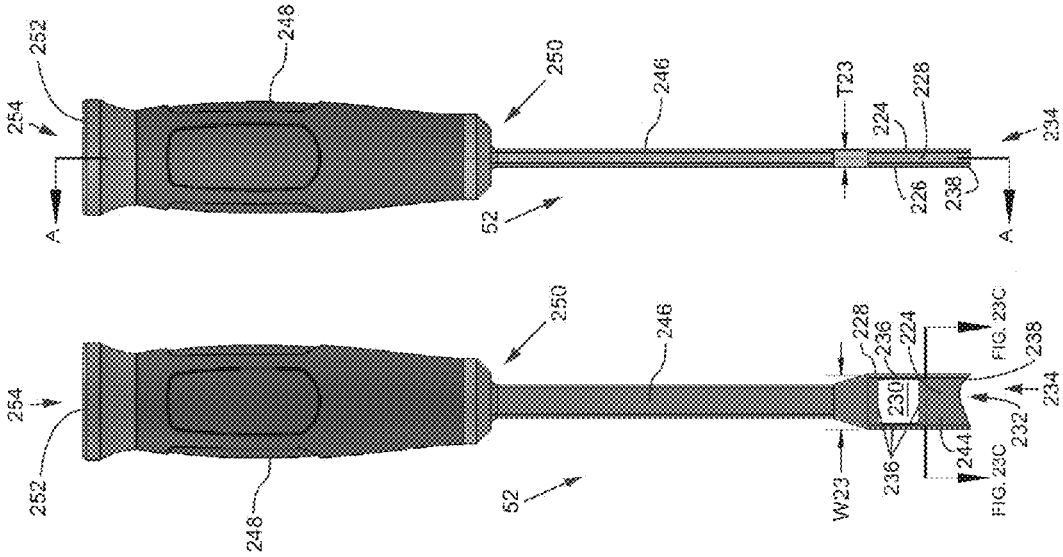

FIG. 23A FIG. 23B

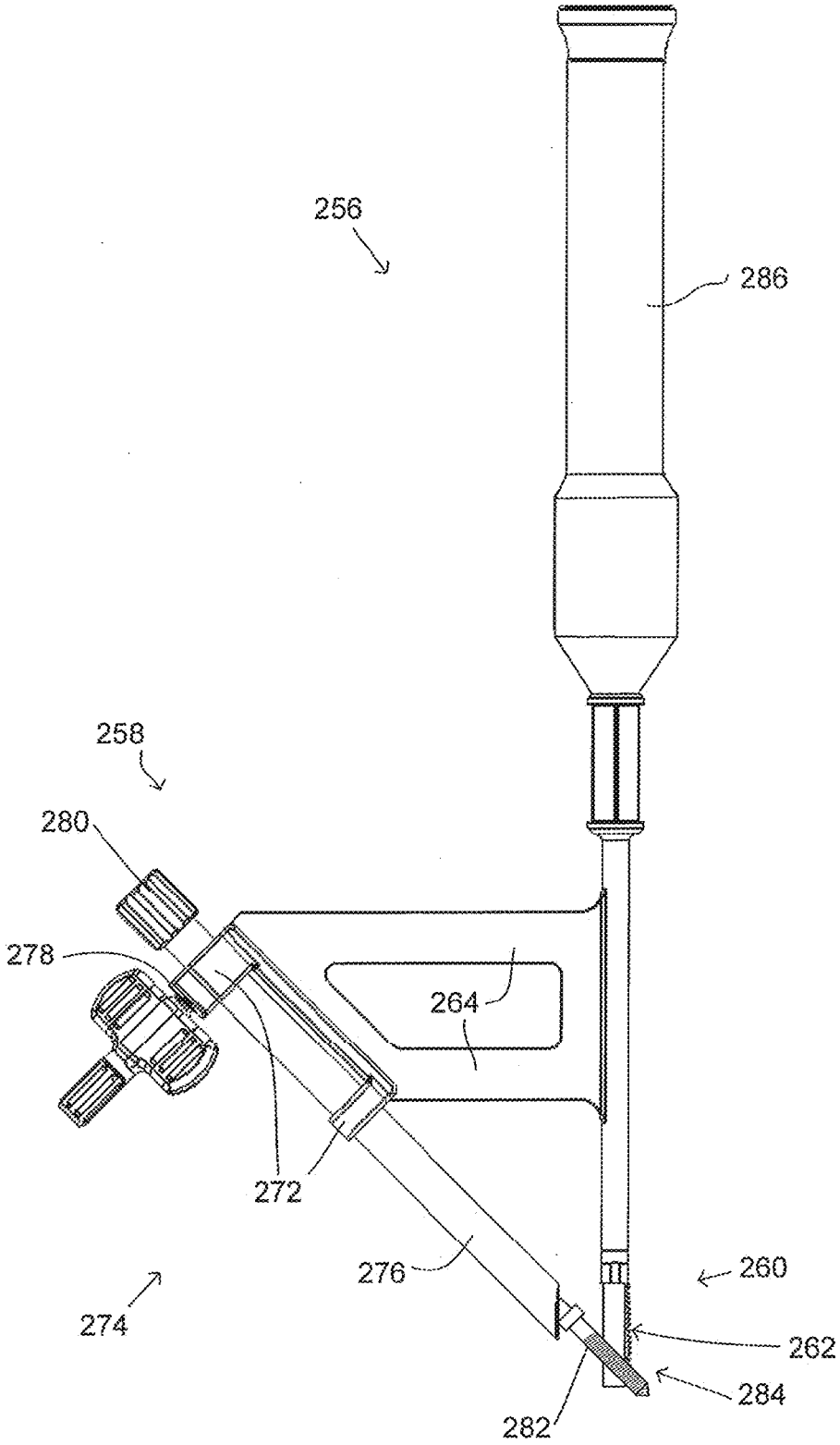

FIG. 24A

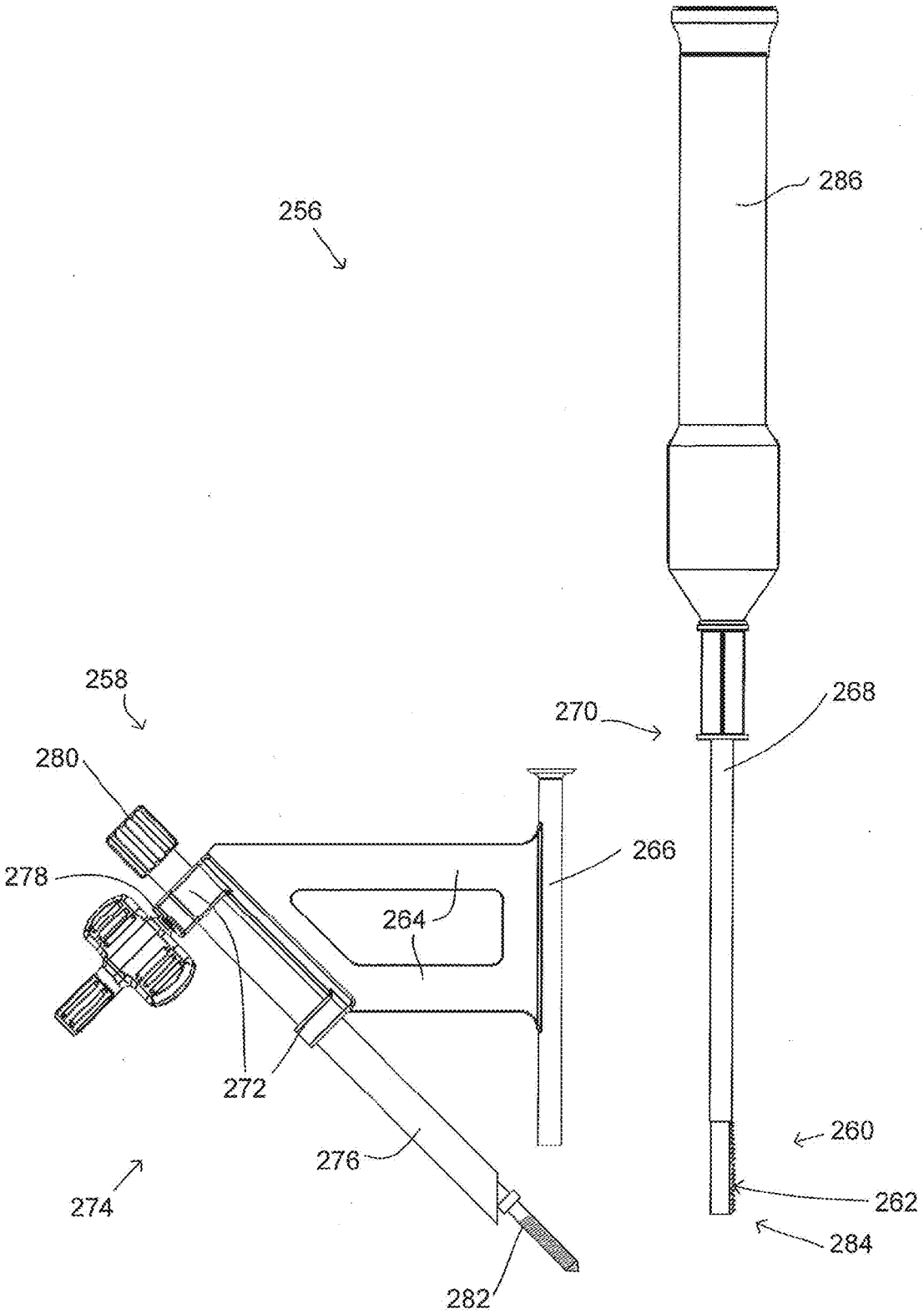

FIG. 24B

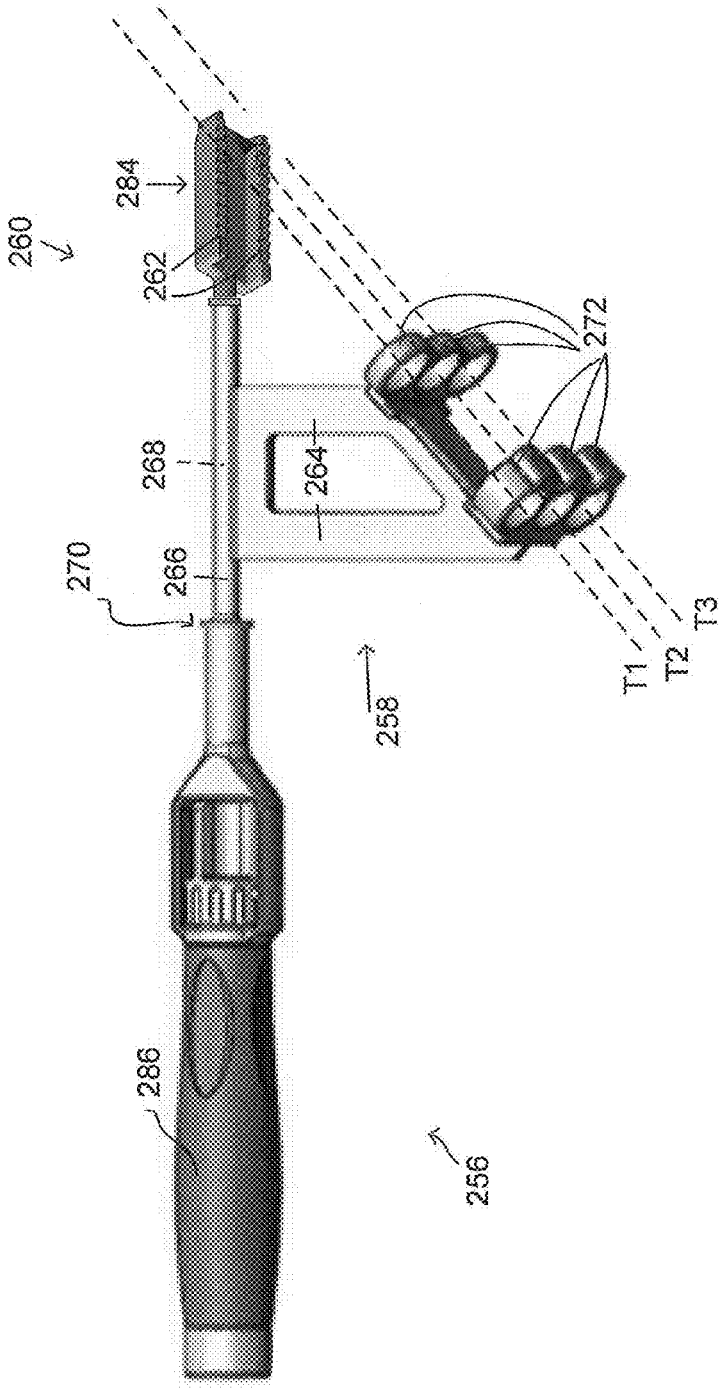

FIG. 25

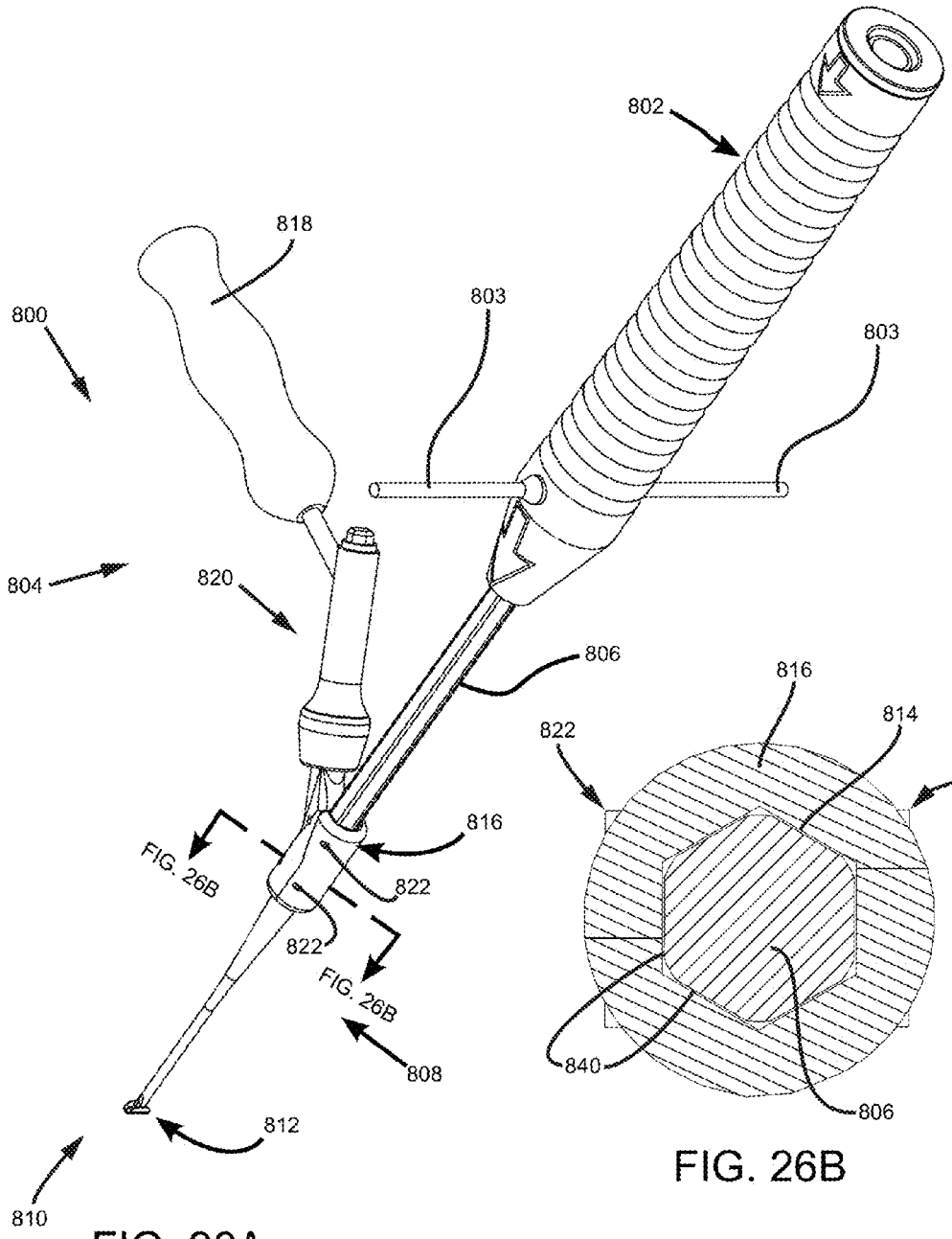

FIG. 26A

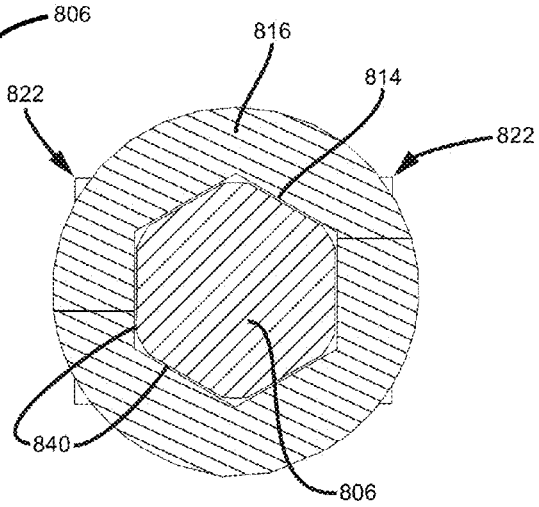

FIG. 26B

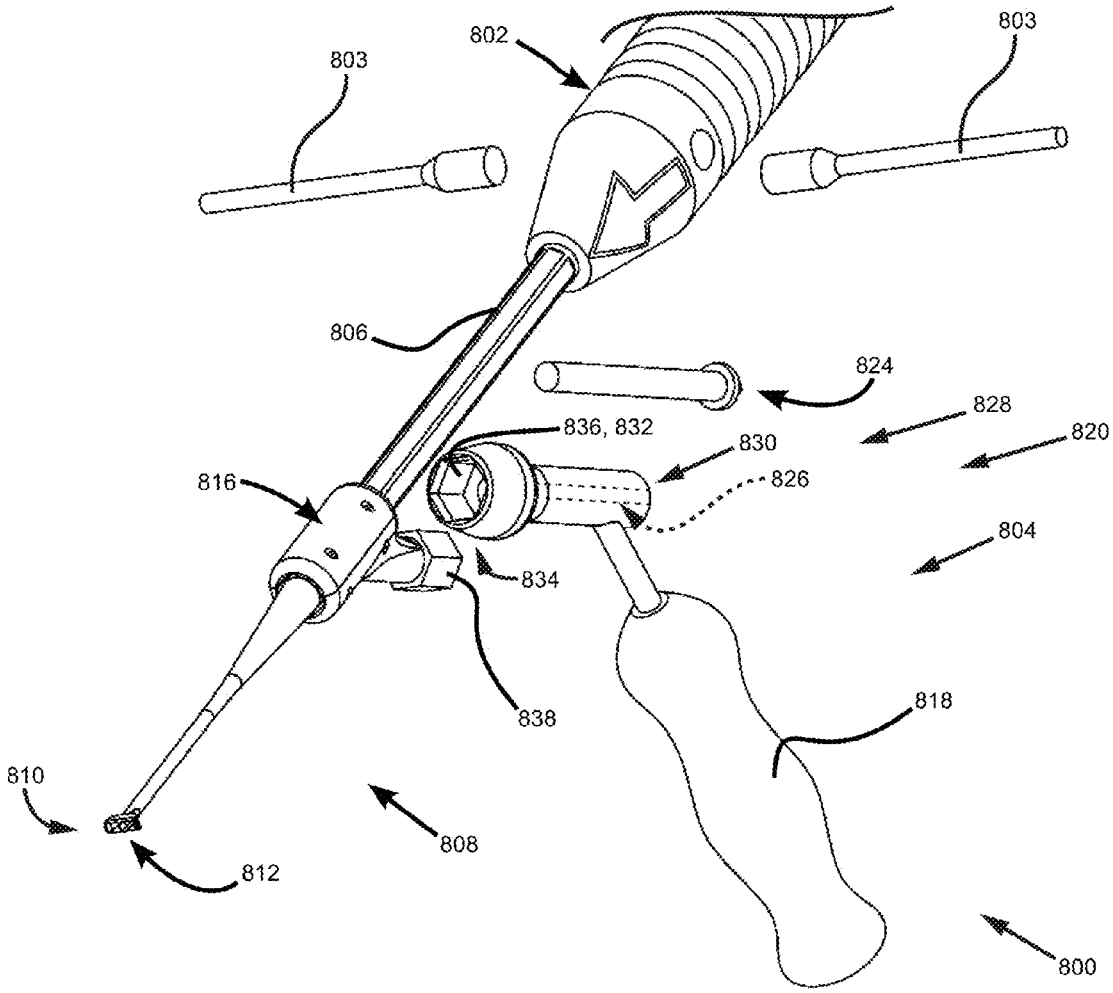
803
802
803
806
824
828
820
836, 832
830
826
816
804
834
838
818
810
808
812
800

FIG. 26C

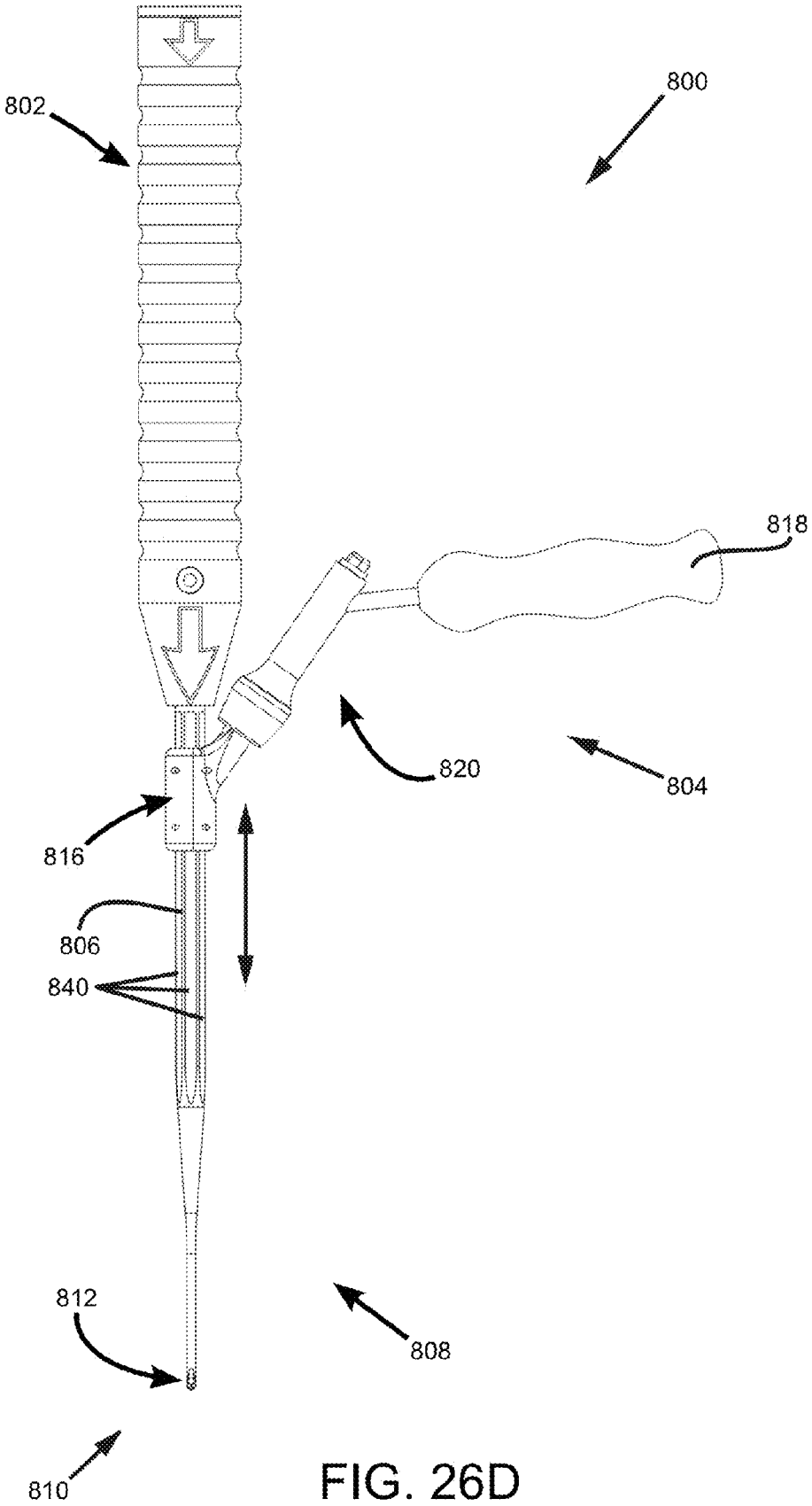

FIG. 26D

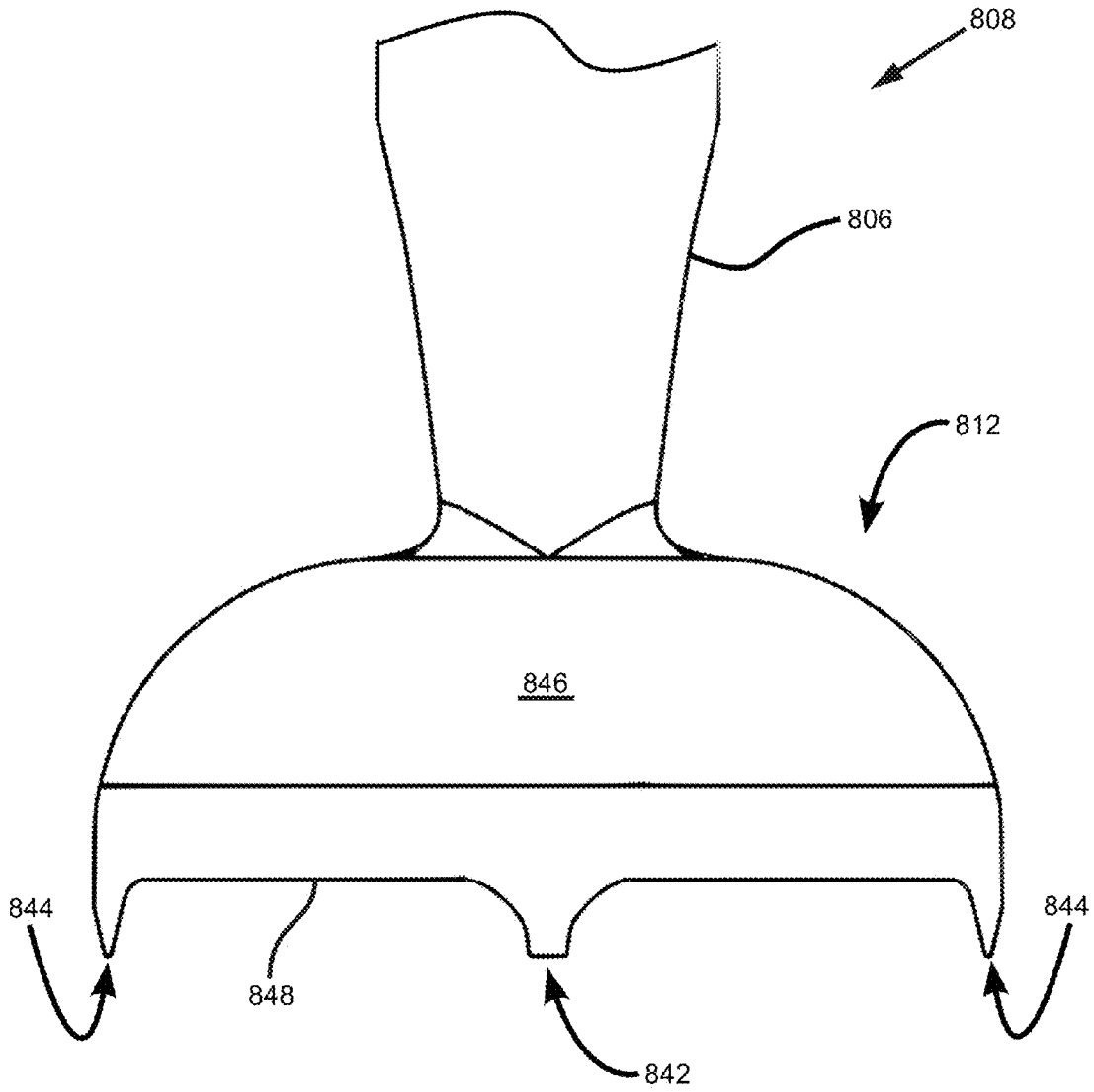

FIG. 26E

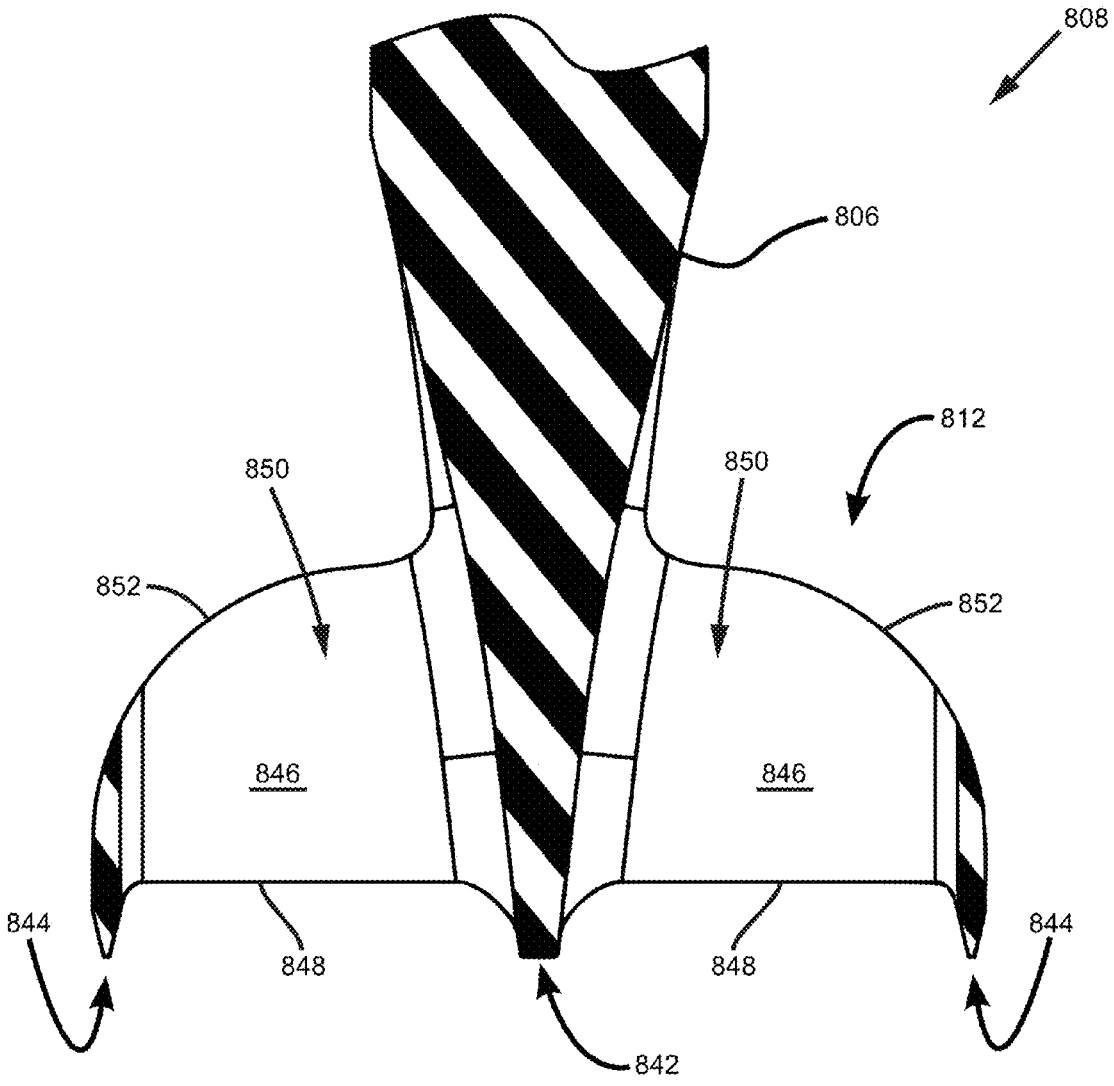

FIG. 26F

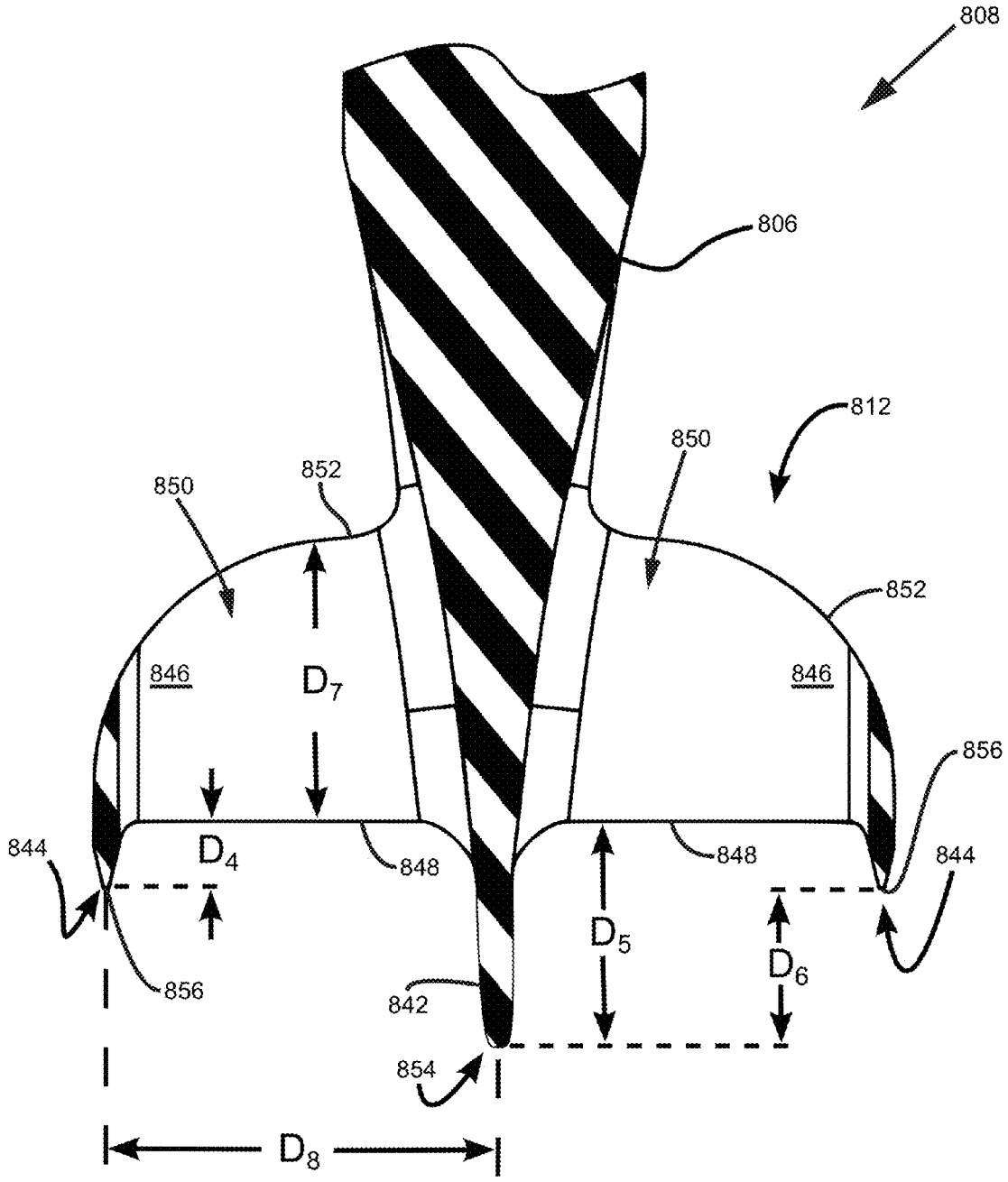
808
806
812
850
852
850
852
846
846
D_7
856
844
D_4
848
848
844
D_5
D_6
856
842
854
D_8

FIG. 26G

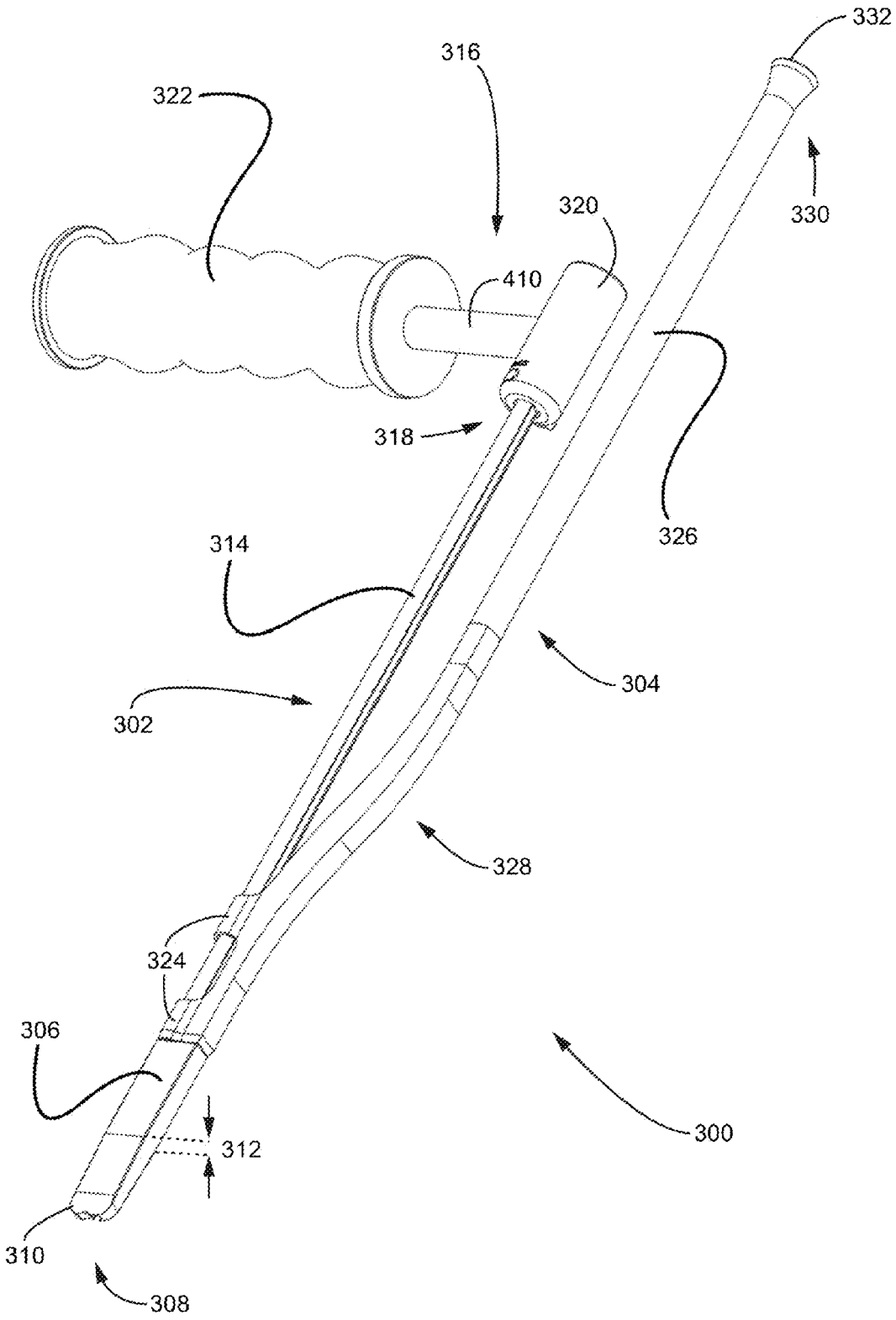
332
316
322
330
320
410
318
326
314
304
302
328
324
306
300
312
310
308

FIG. 27

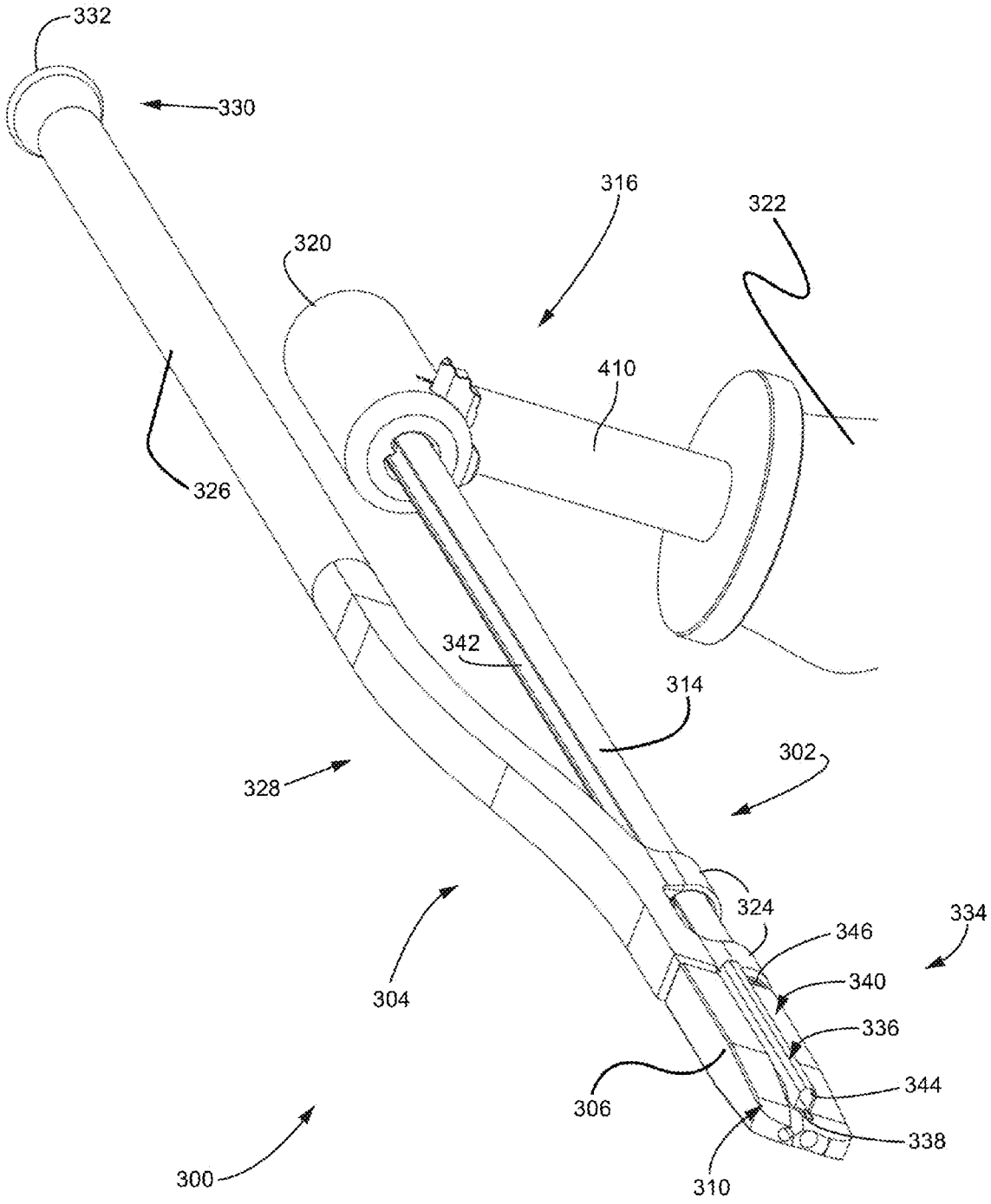
332
330
316
322
320
410
326
342
314
328
302
324
334
346
340
304
336
344
306
338
310
300

FIG. 28

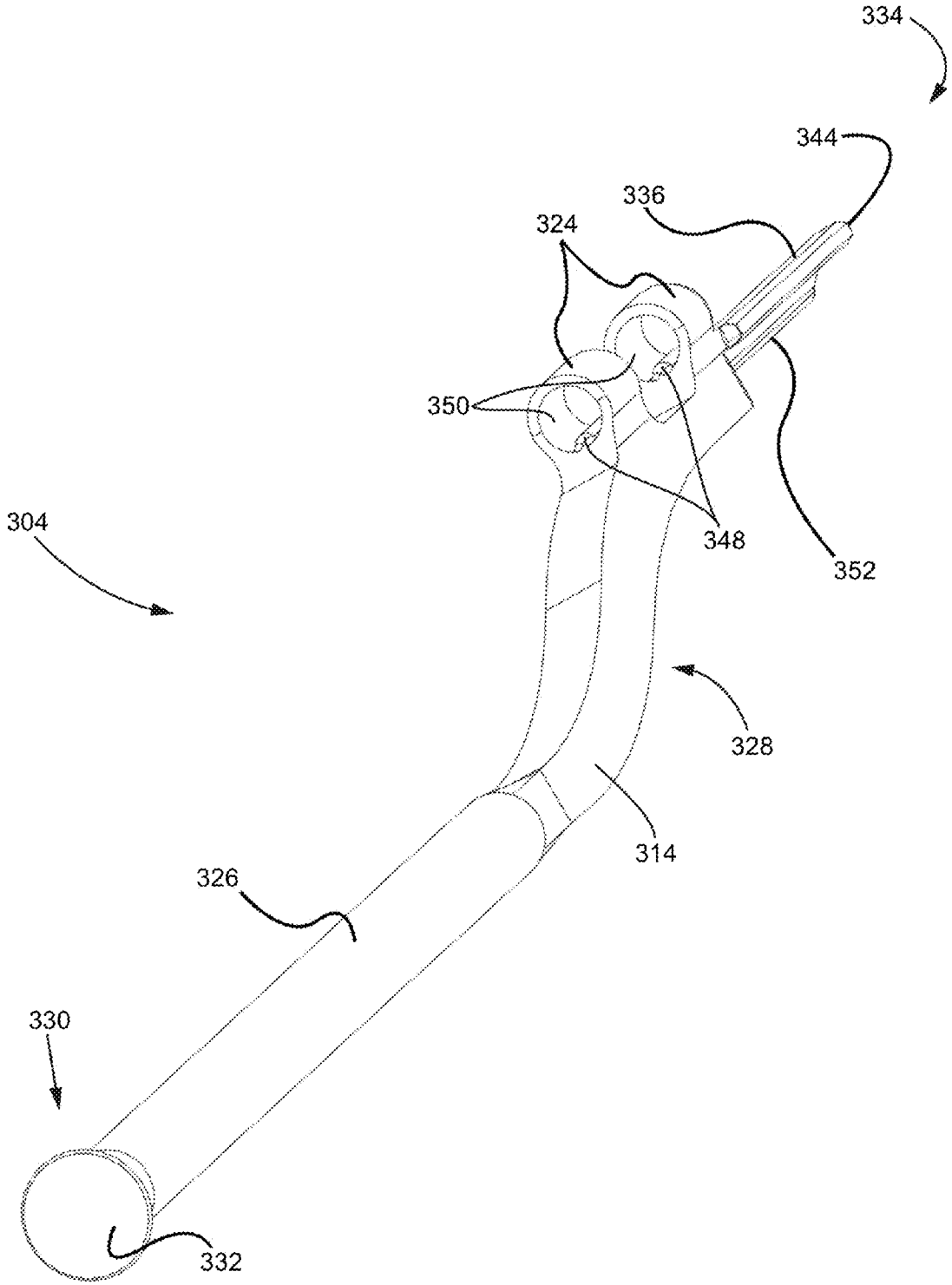

FIG. 29

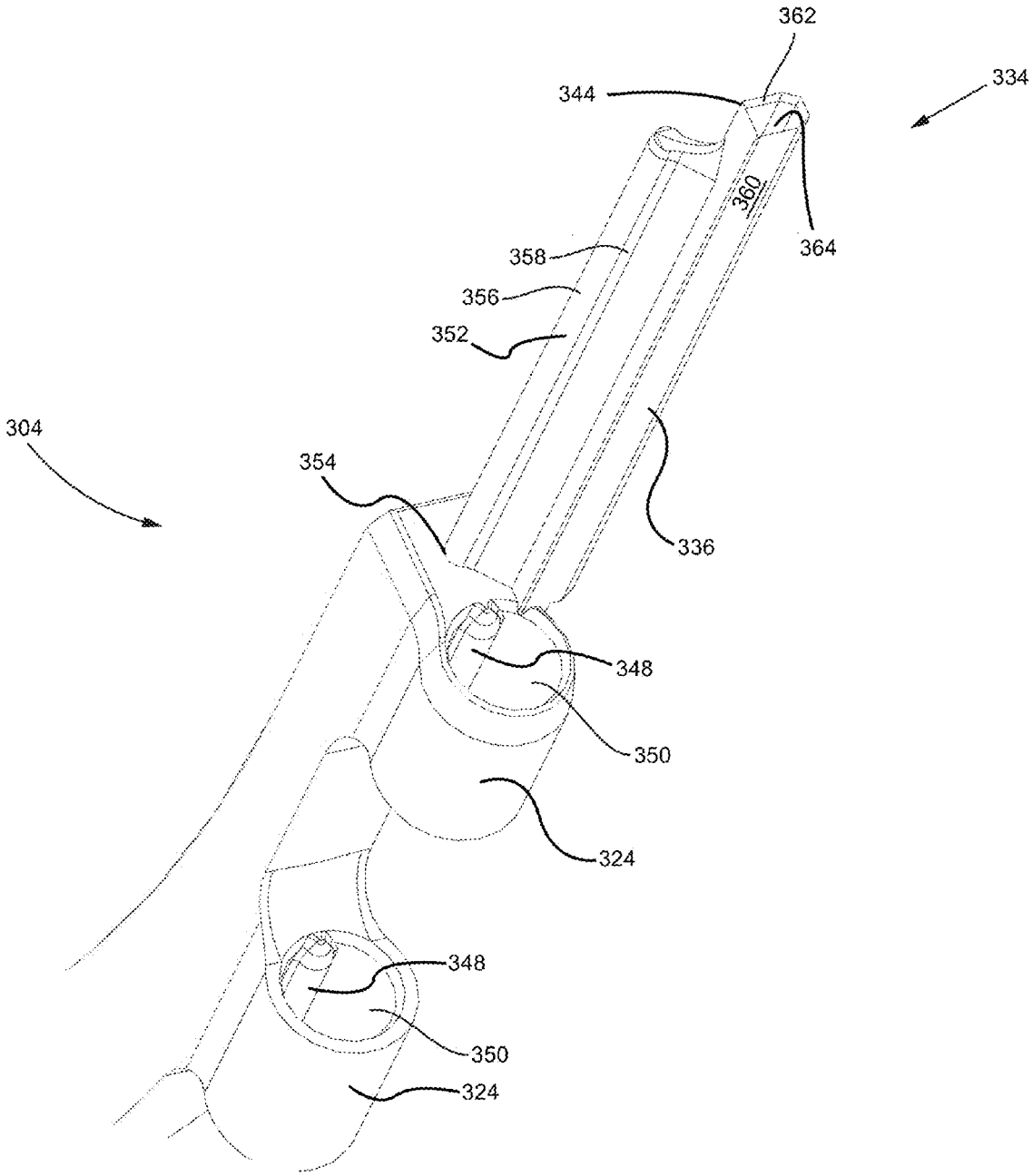
362
344
334
360
364
358
356
352
304
354
336
348
350
324
348
350
324

FIG. 30

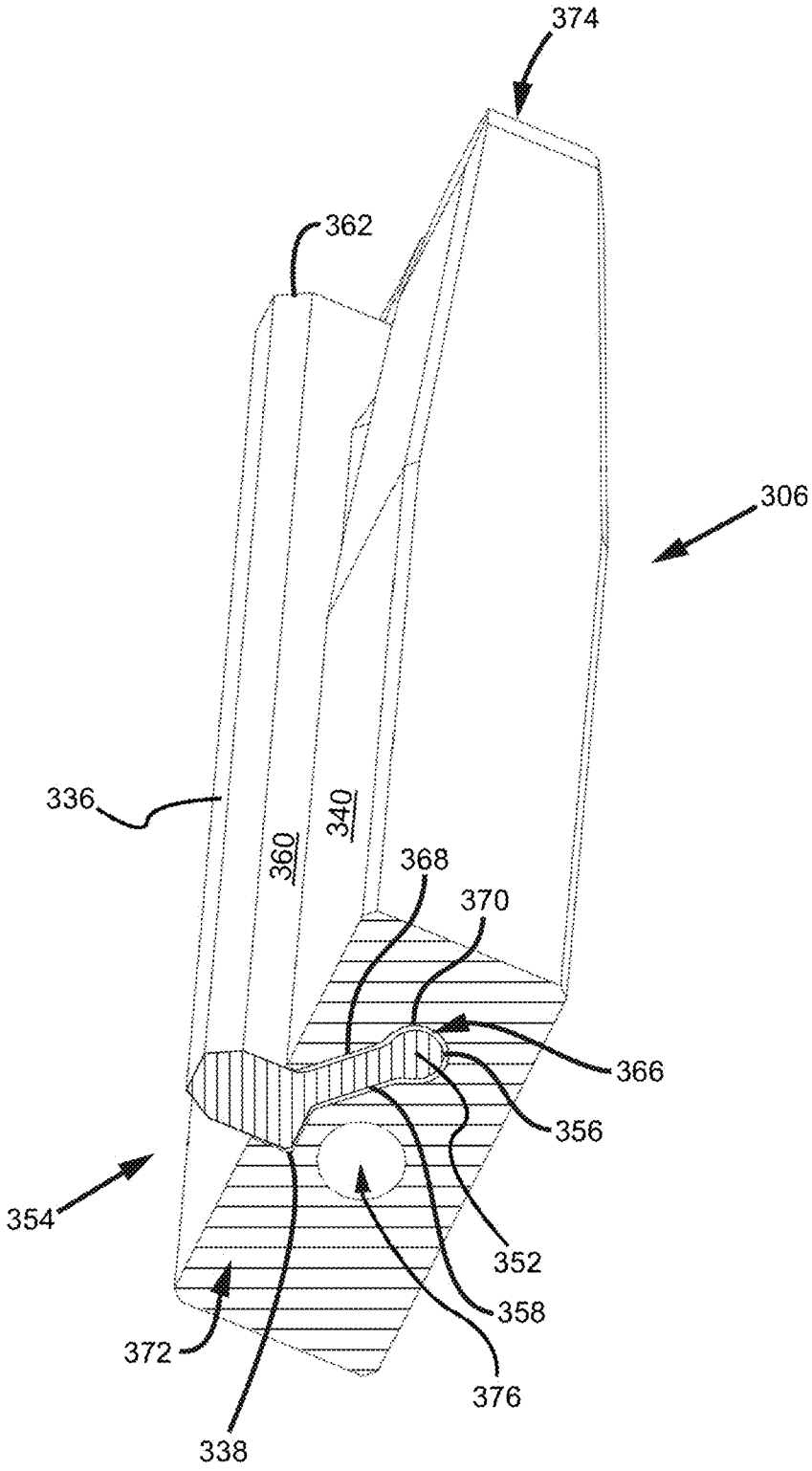

FIG. 31

FIG. 32

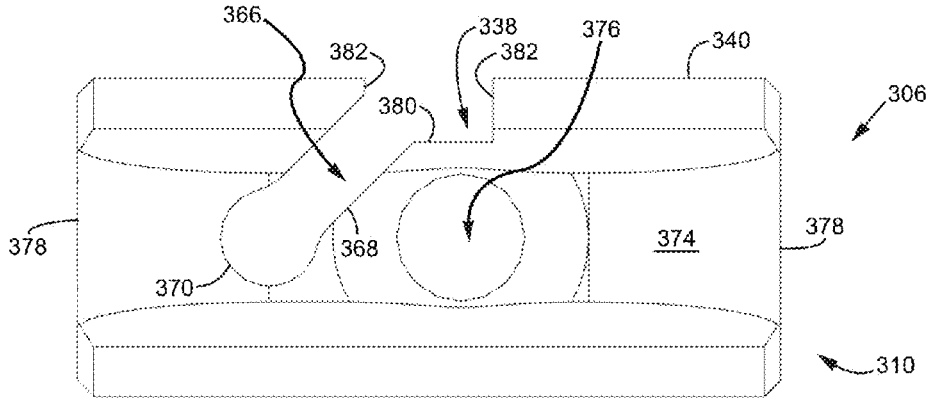
366
382
338
382
376
340
306
380
378
368
374
378
370
310

FIG. 33

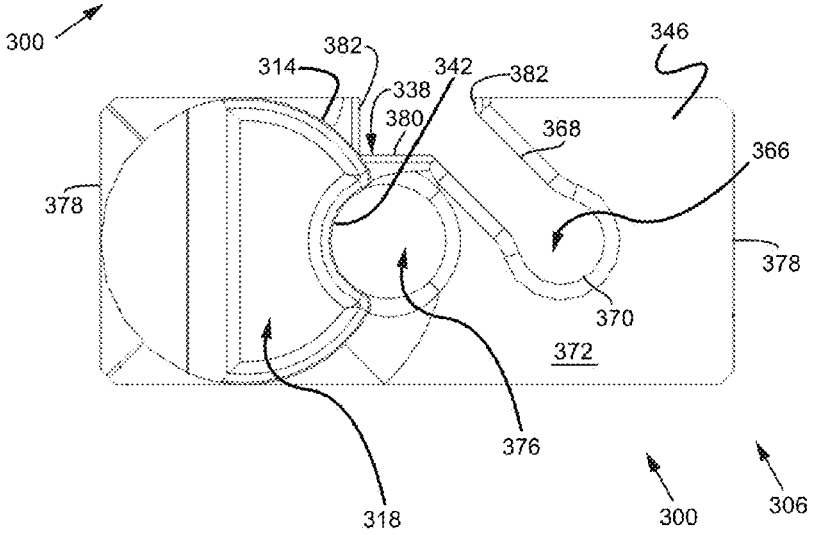
300
382
314
342
382
346
338
380
368
366
378
378
370
372
376
318
300
306

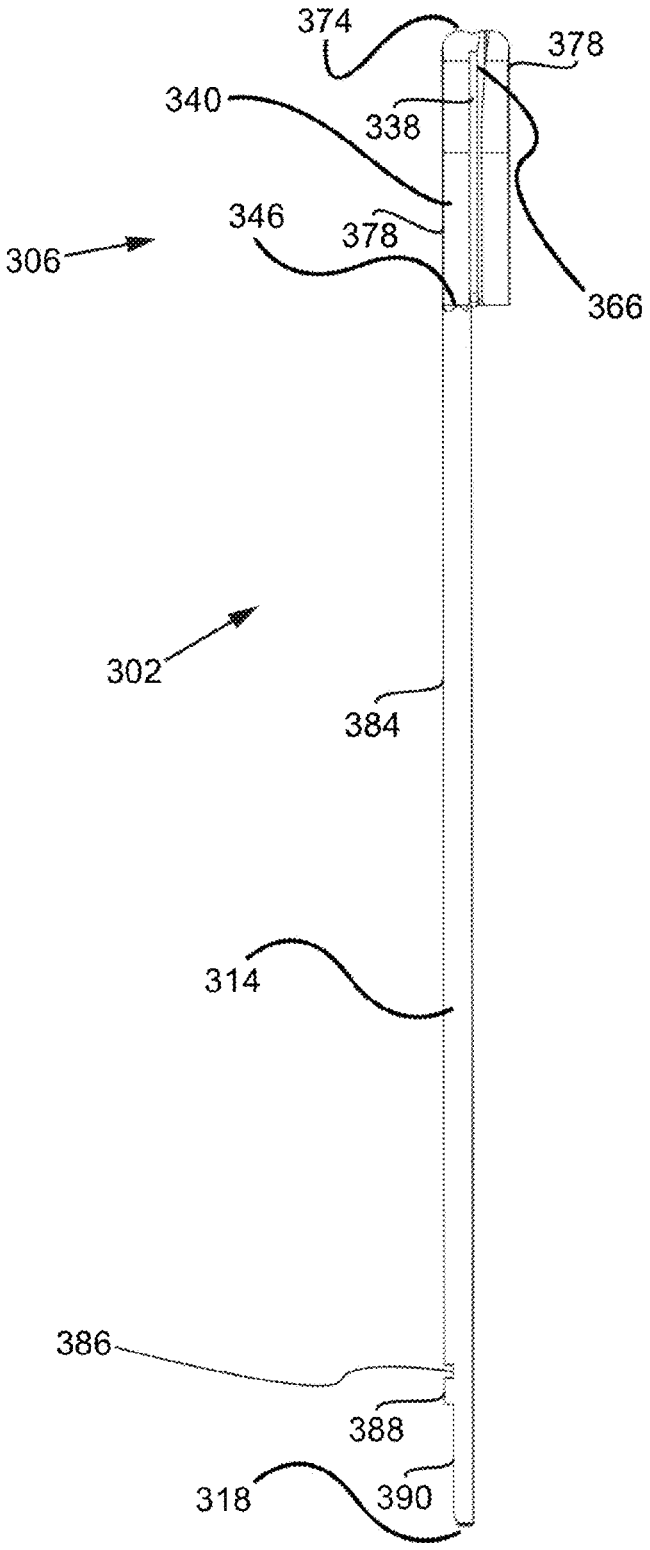

FIG. 34

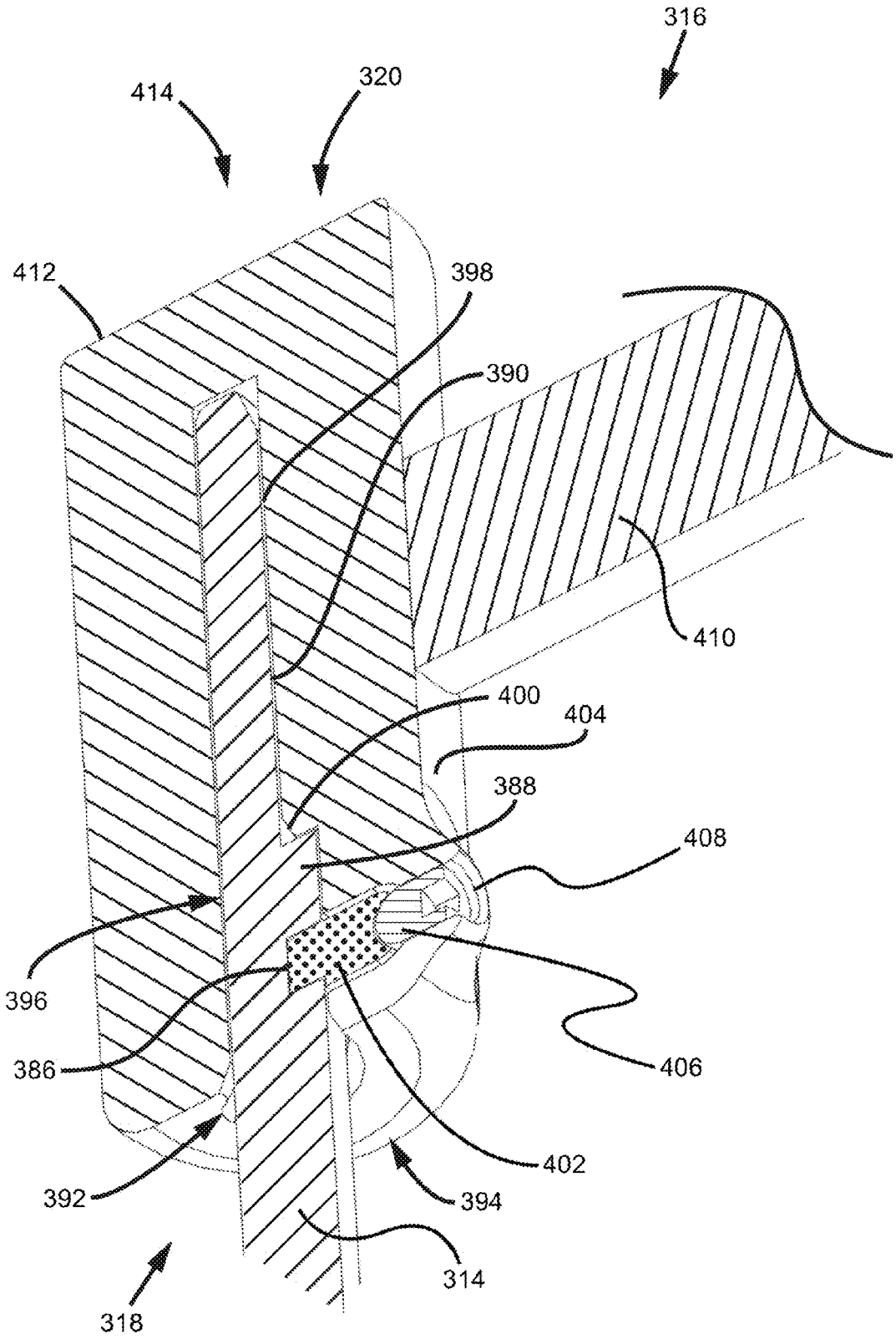
316
320
414
412
398
390
410
400
404
388
408
396
386
406
402
392
394
314
318

FIG. 35

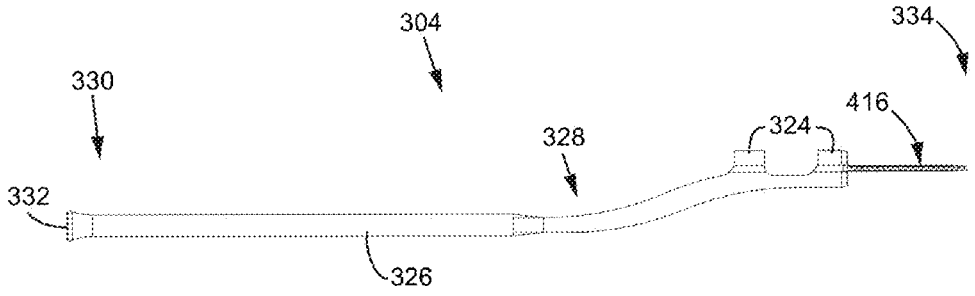

FIG. 36A

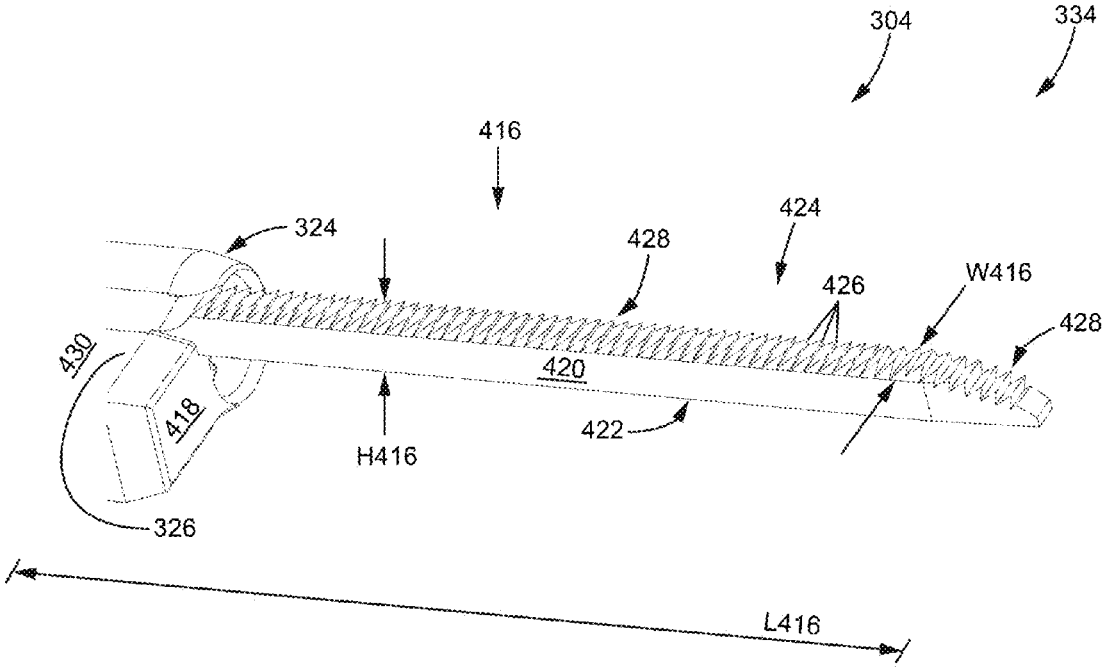

FIG. 36B

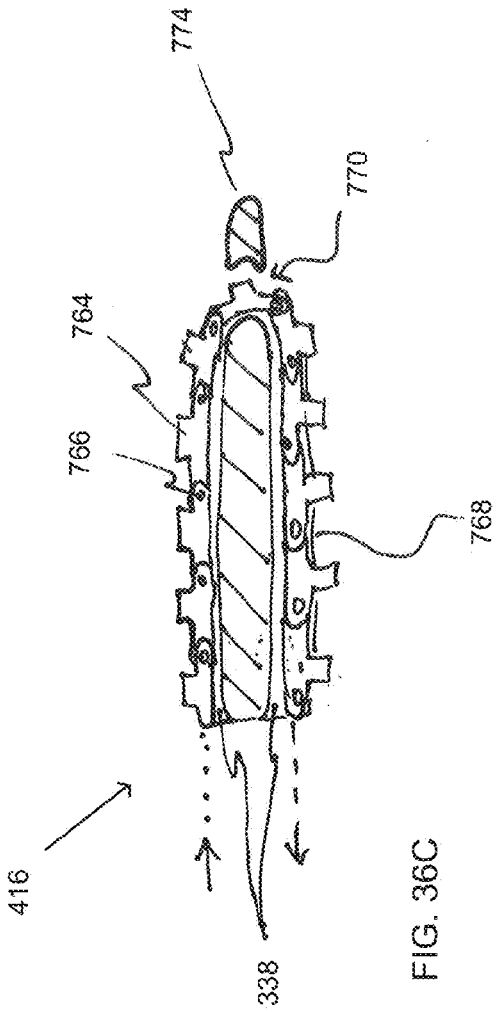

FIG. 36C

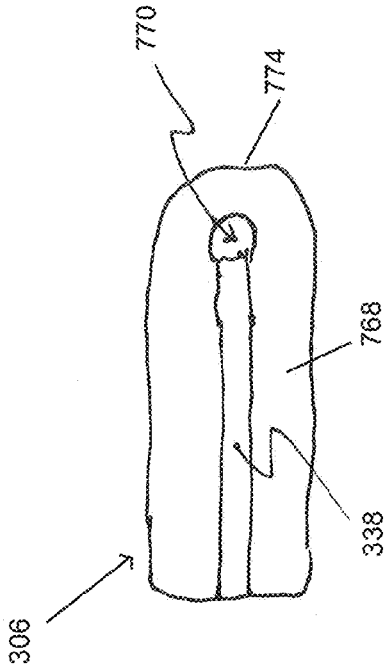

FIG. 36D

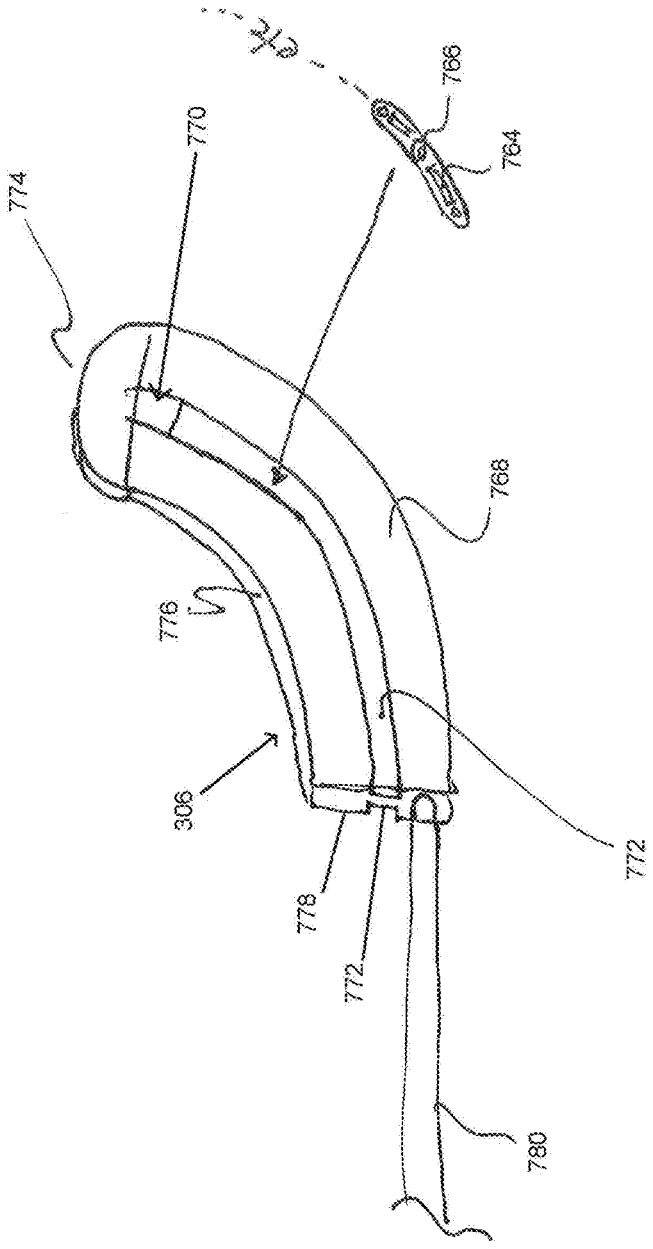

FIG. 36E

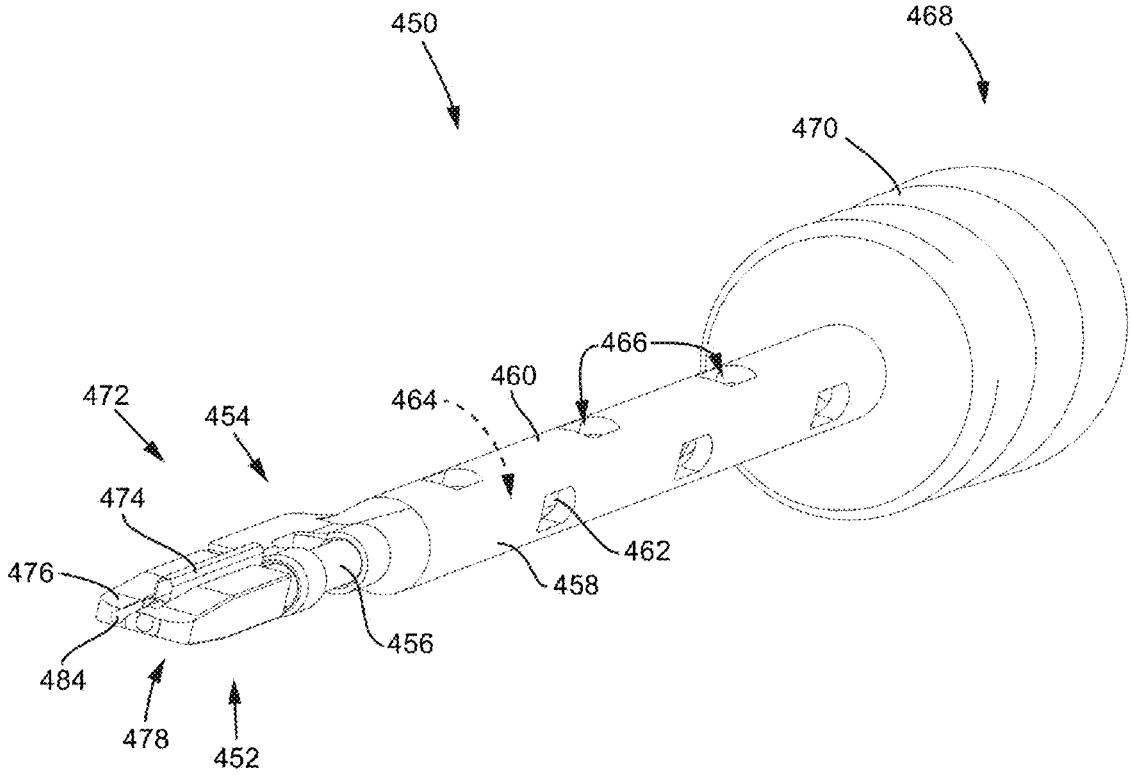

FIG. 37

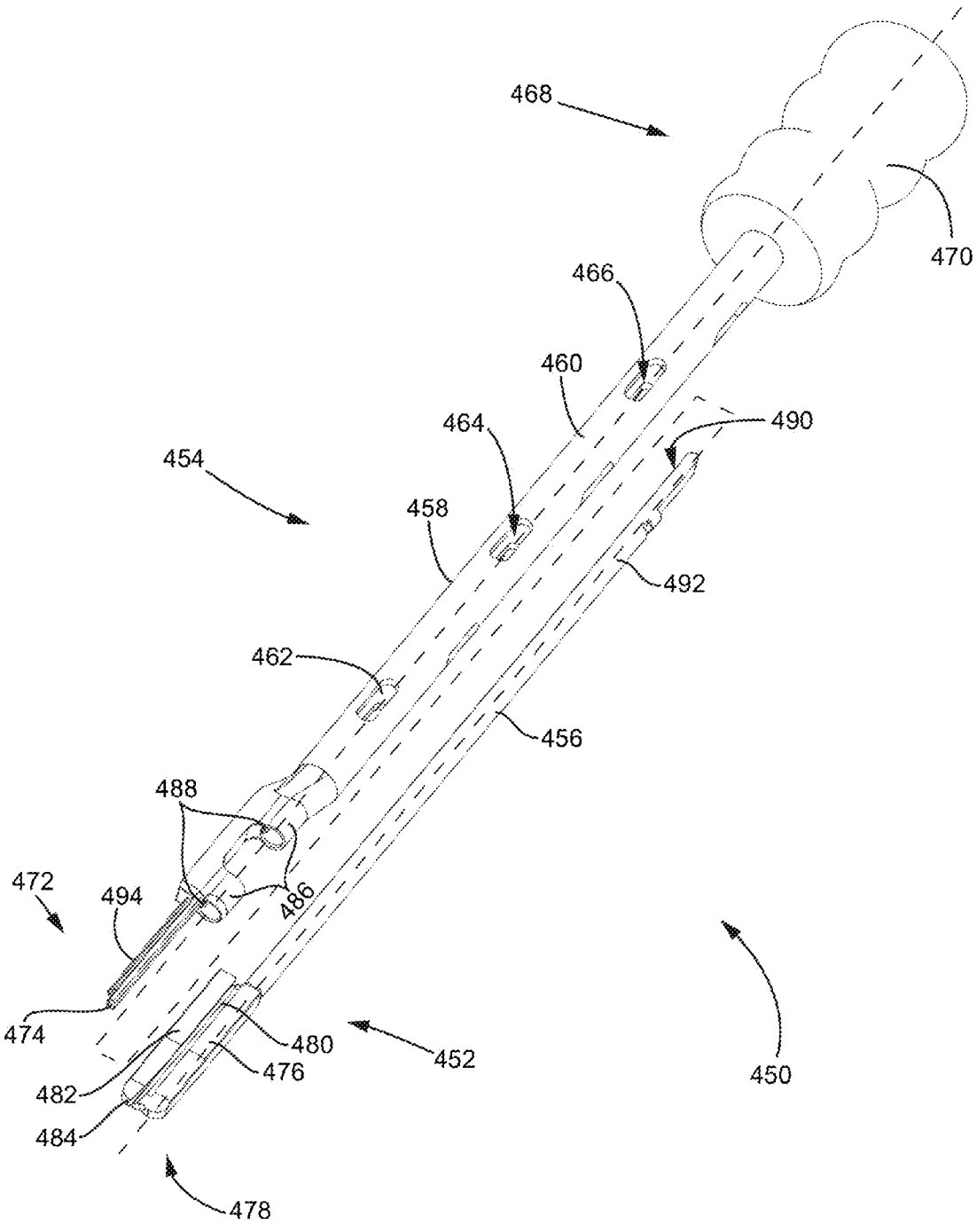
468
470
466
460
464
490
454
458
492
462
456
488
472
494
486
474
480
452
476
450
482
484
478

FIG. 38

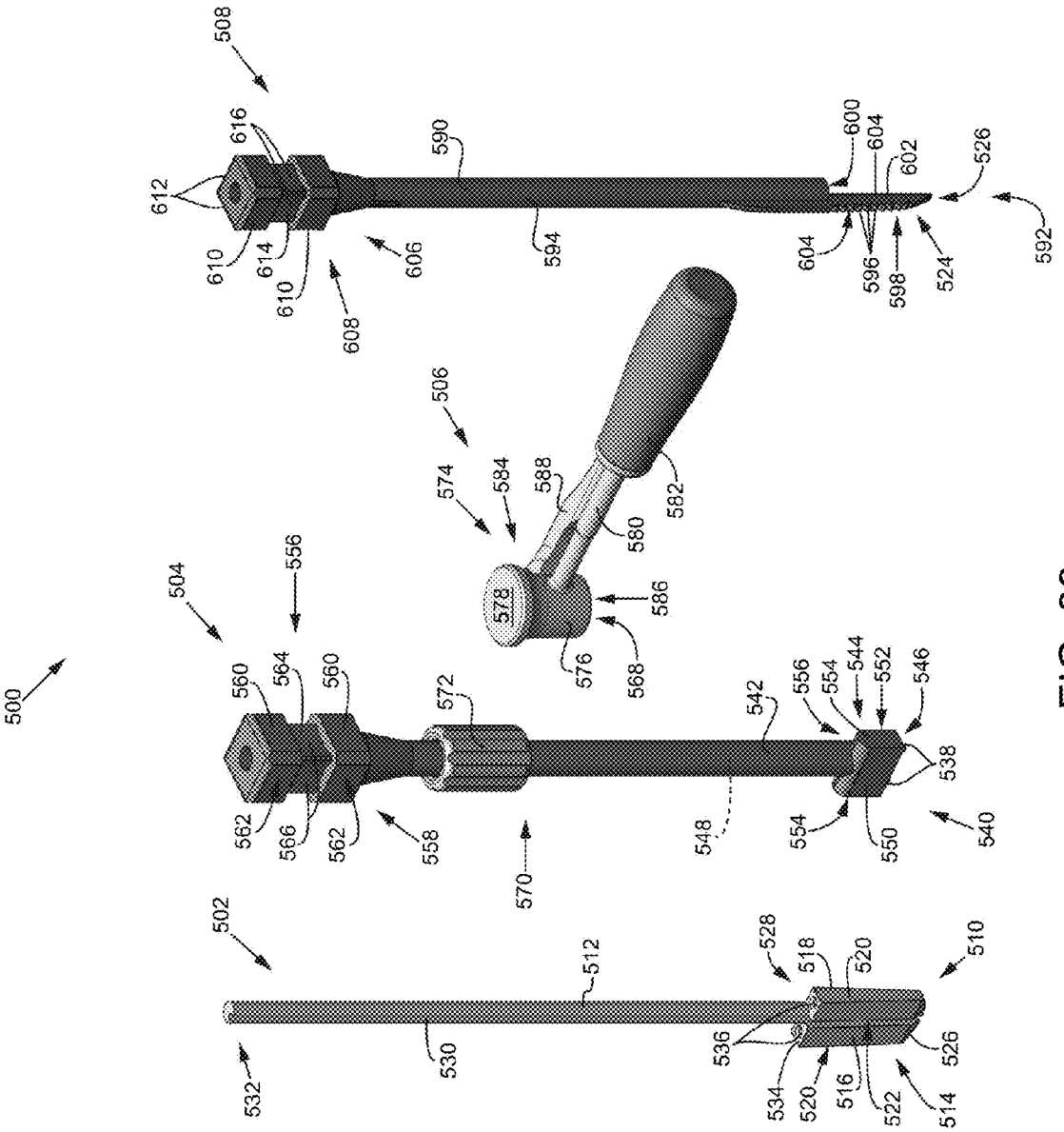
500
502
504
506
508
510
512
514
516
518
520
522
524
526
528
530
532
534
536
538
540
542
544
546
548
550
552
554
556
558
560
562
564
566
568
570
572
574
576
578
580
582
584
586
588
590
592
594
596
598
600
602
604
606
608
610
612
614
616

FIG. 39

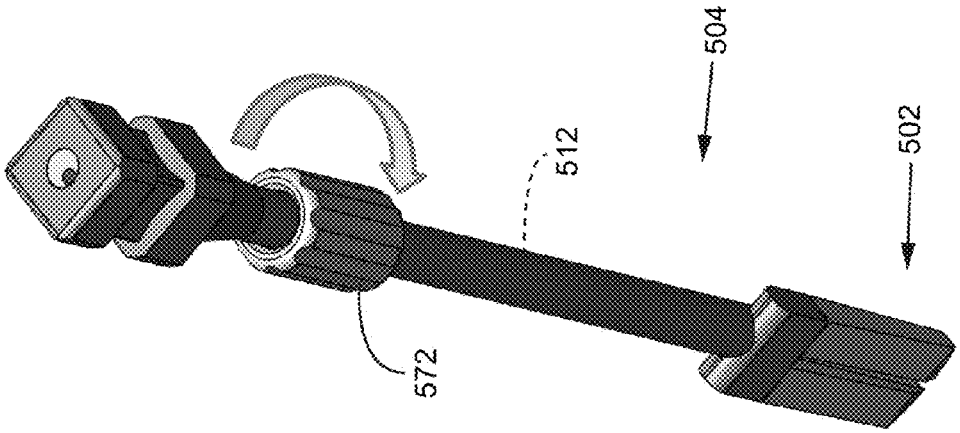

FIG. 40C

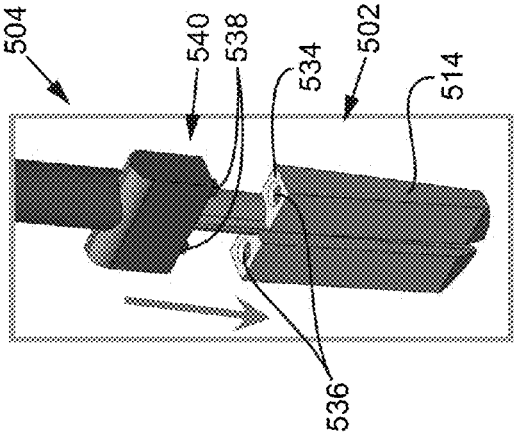

FIG. 40B

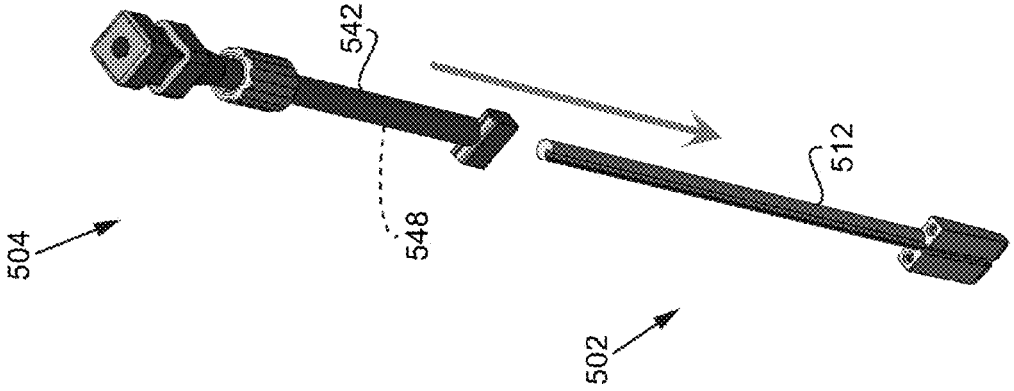

FIG. 40A

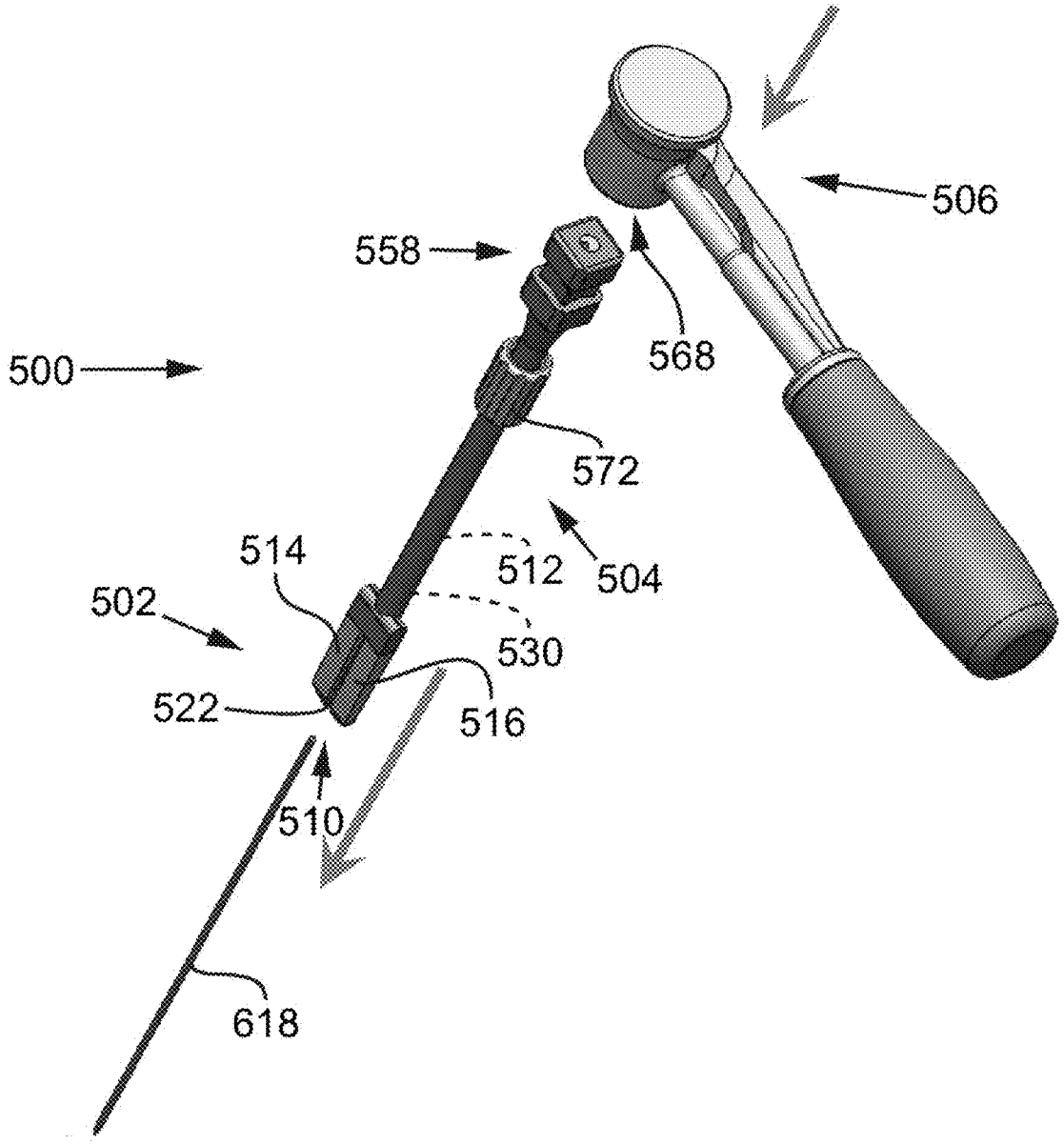

FIG. 41

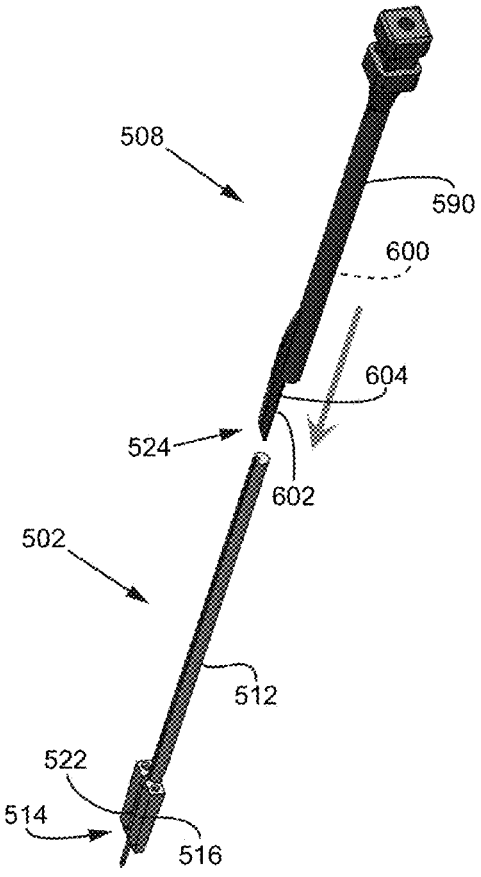

FIG. 42A

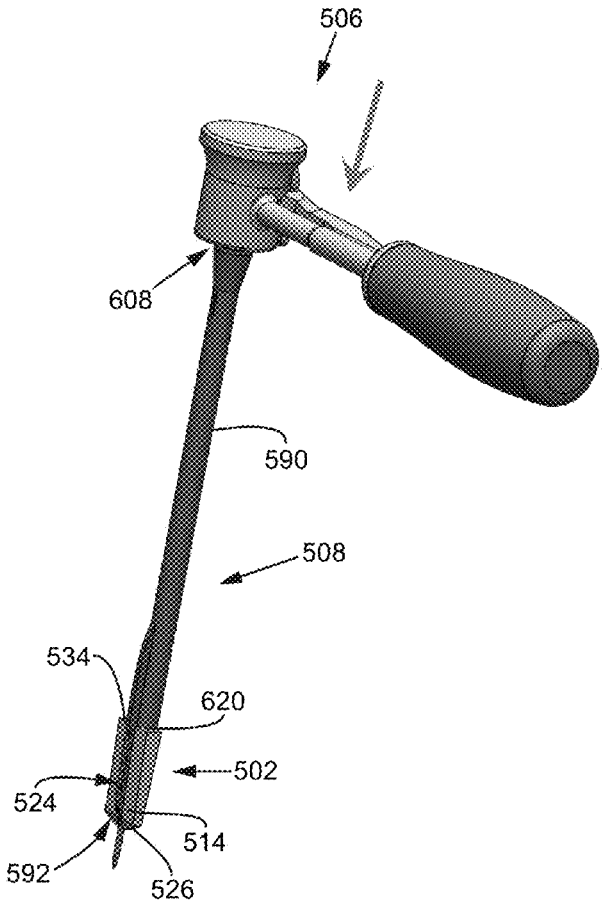

FIG. 42B

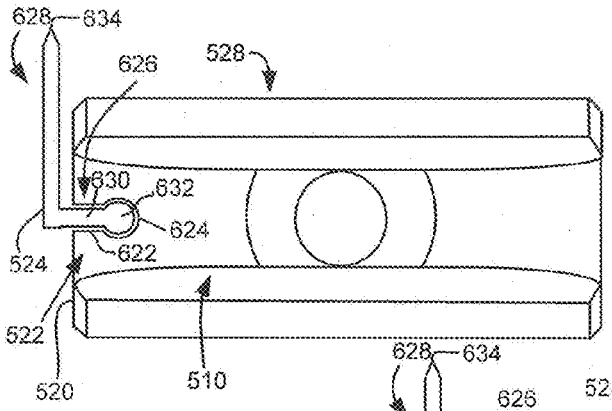

FIG. 43A

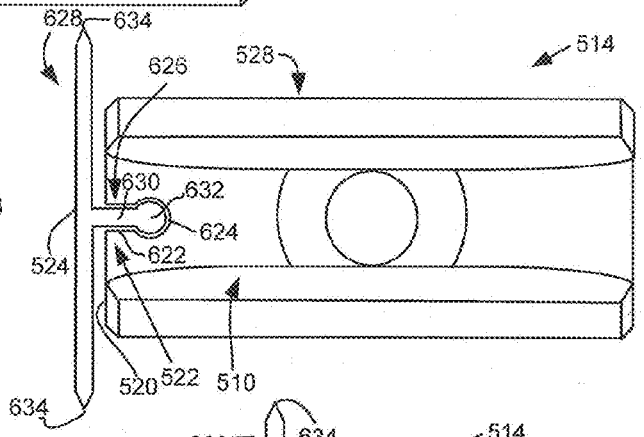

FIG. 43B

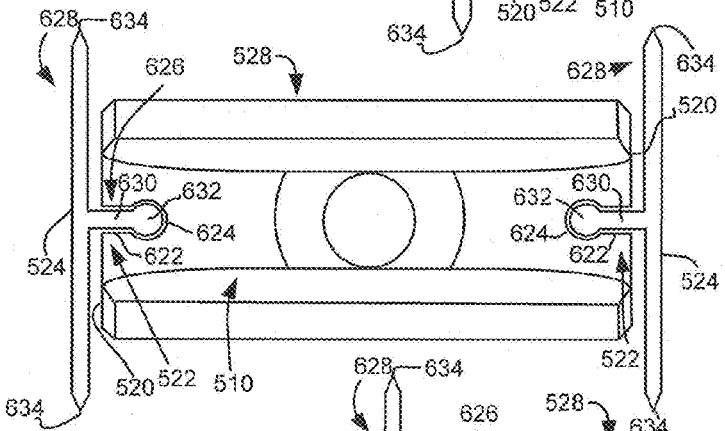

FIG. 43C

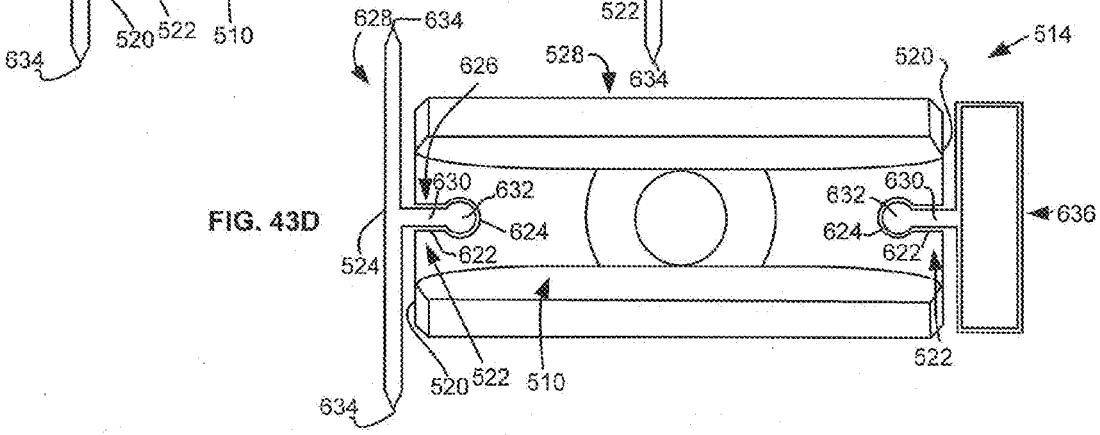

FIG. 43D

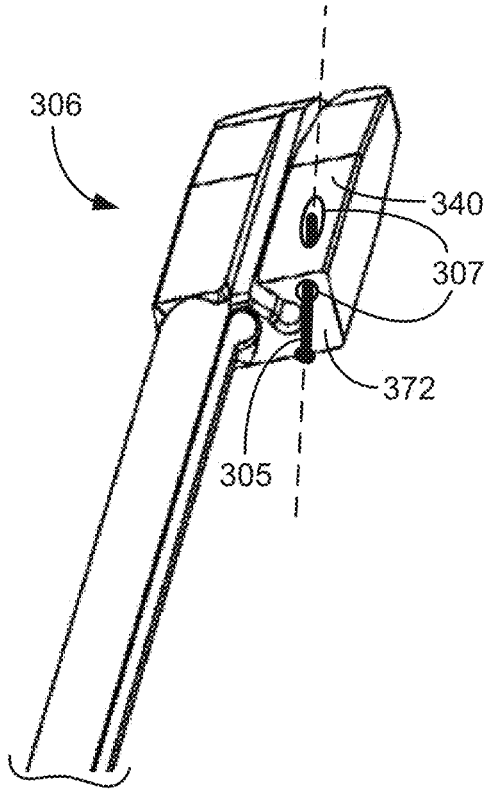

FIG. 43E

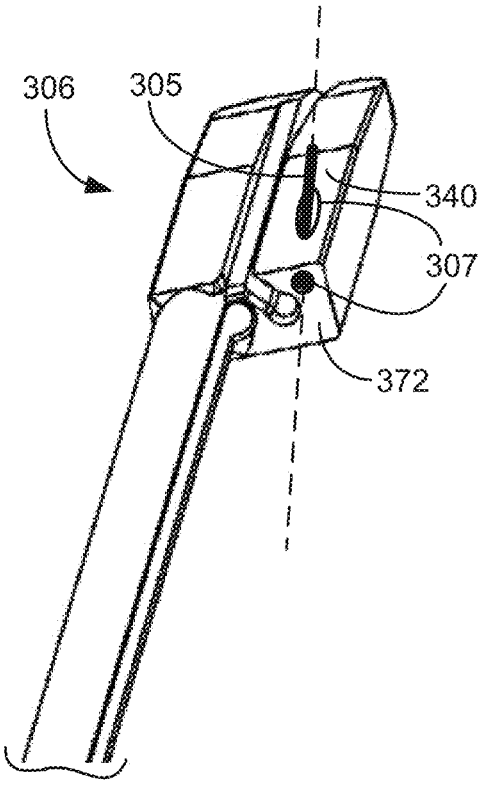

FIG. 43F

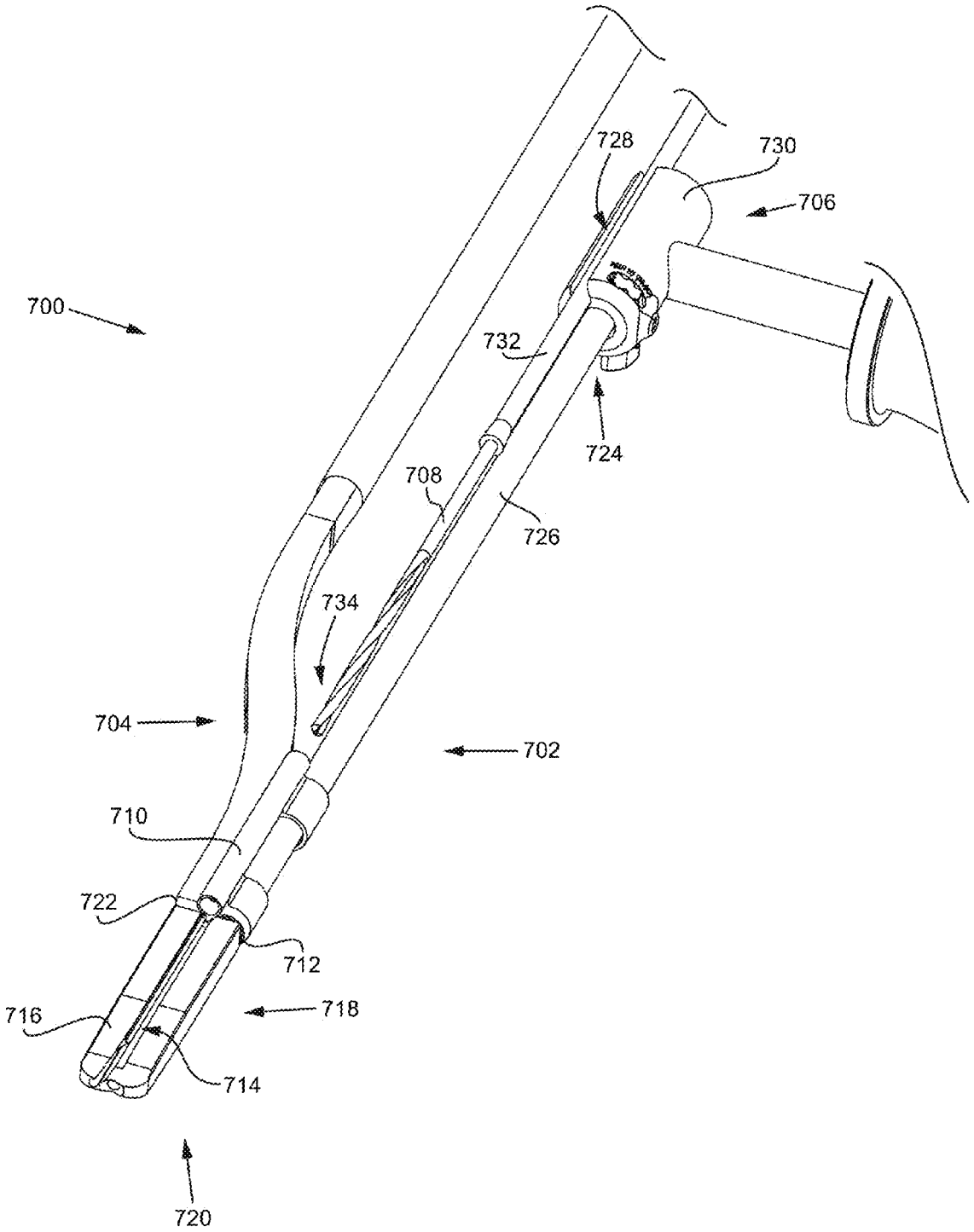
700
728
730
706
732
724
708
726
734
704
702
710
722
712
716
718
714
720

FIG. 44

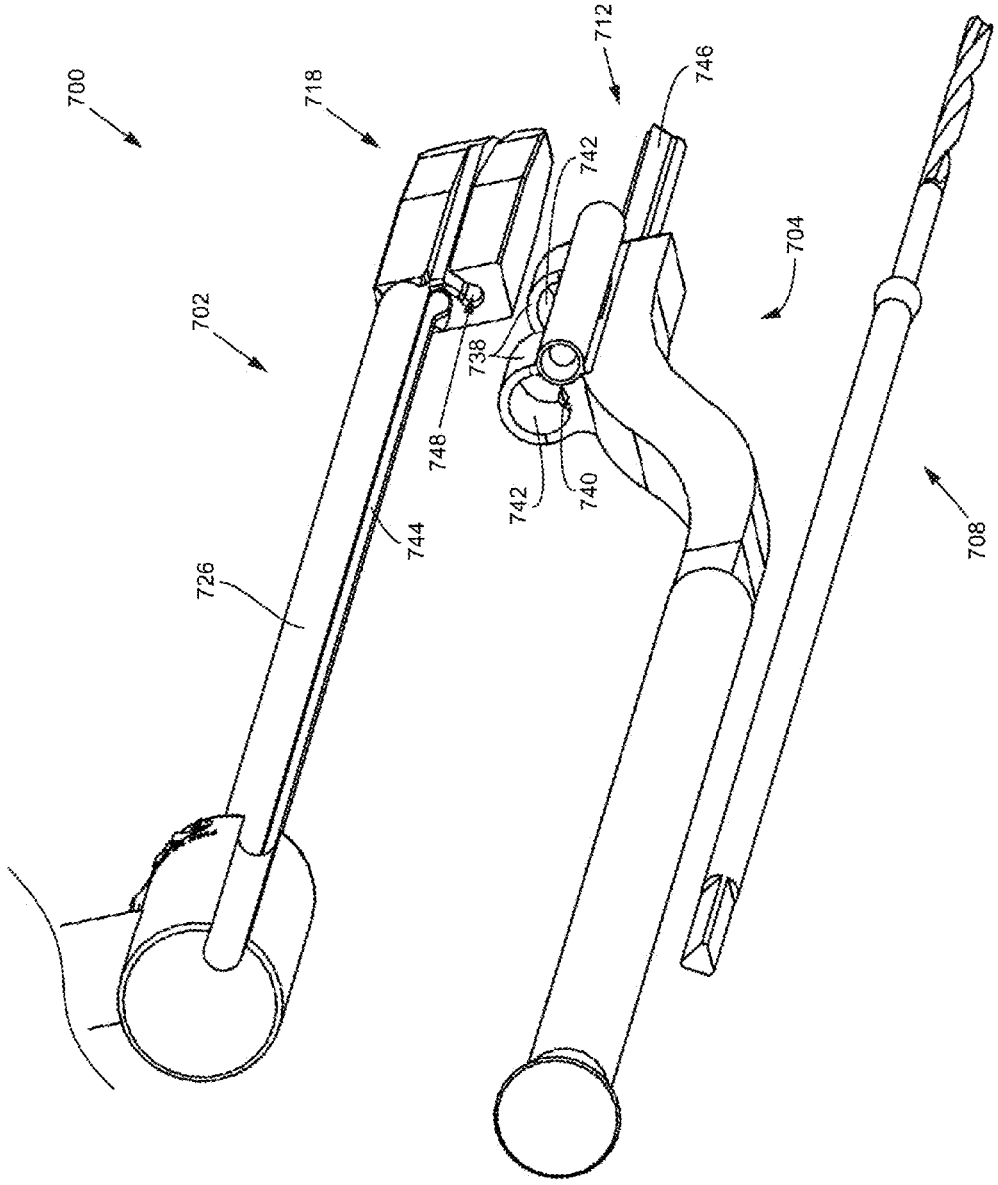

FIG. 45

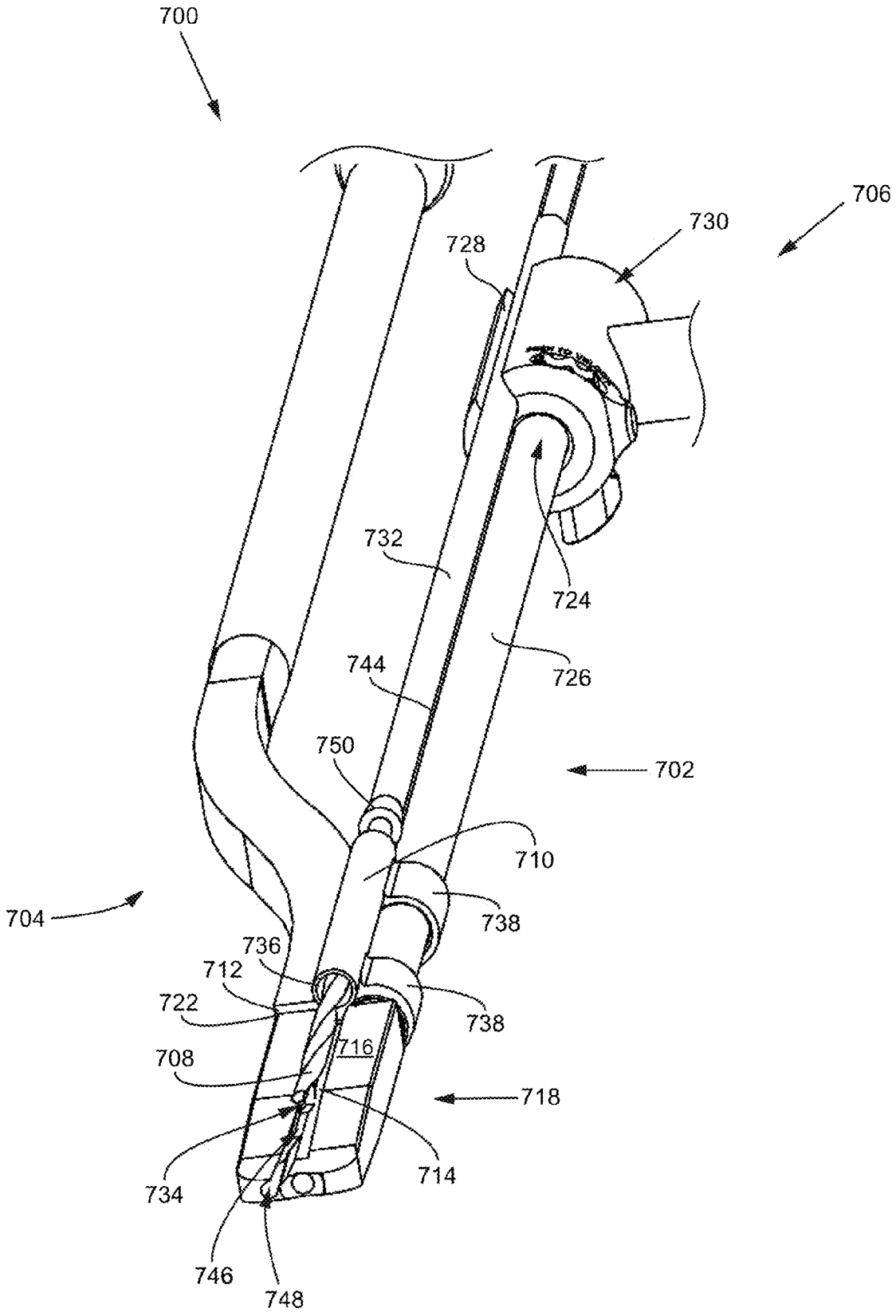
700
706
730
728
732
724
744
726
750
702
710
704
738
736
712
722
738
716
708
718
714
734
746
748

FIG. 46

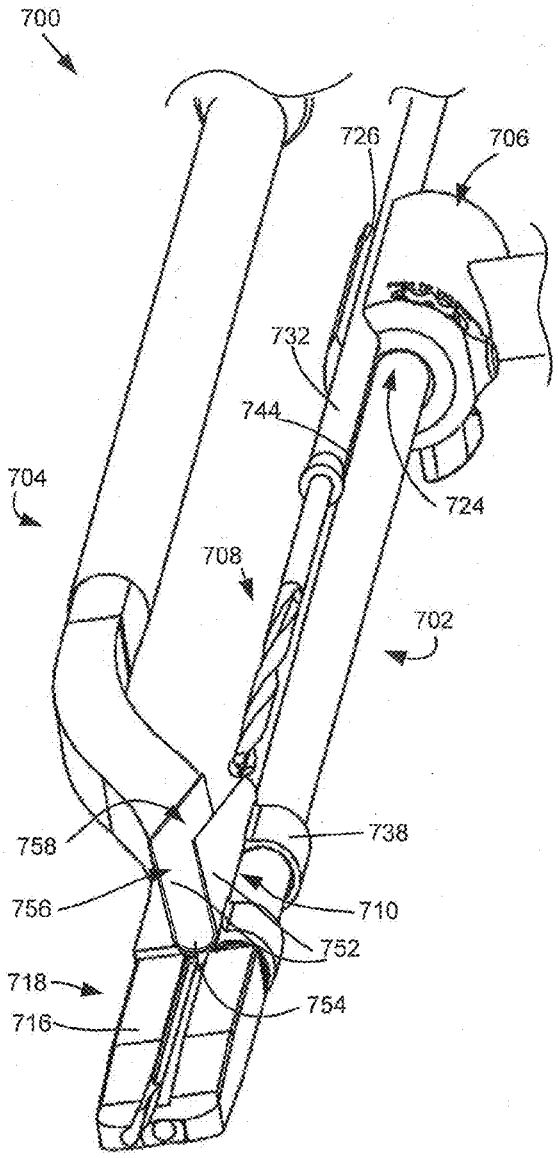

FIG. 47A

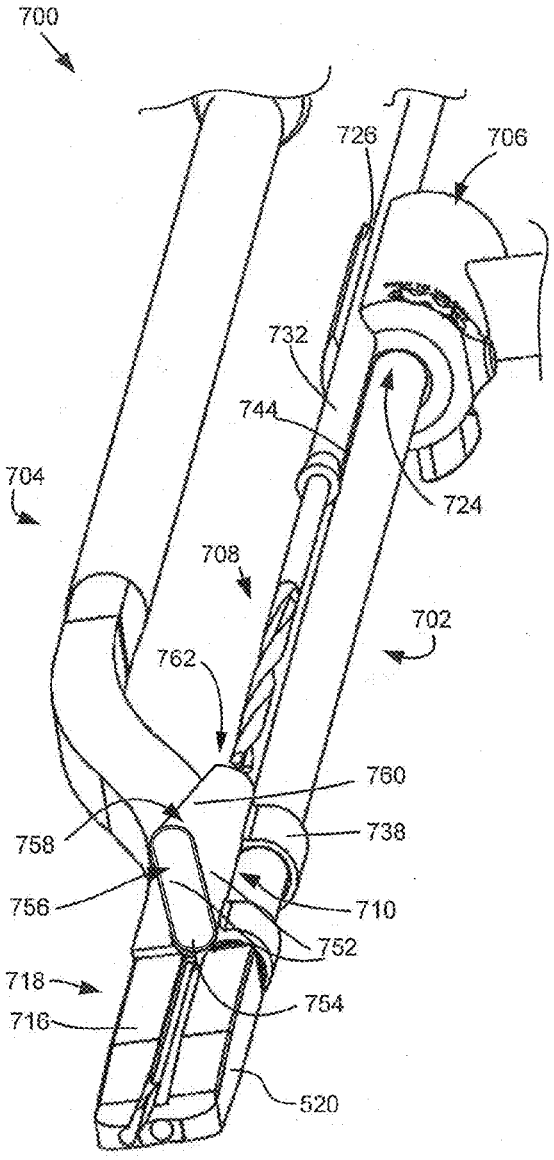

FIG. 47B

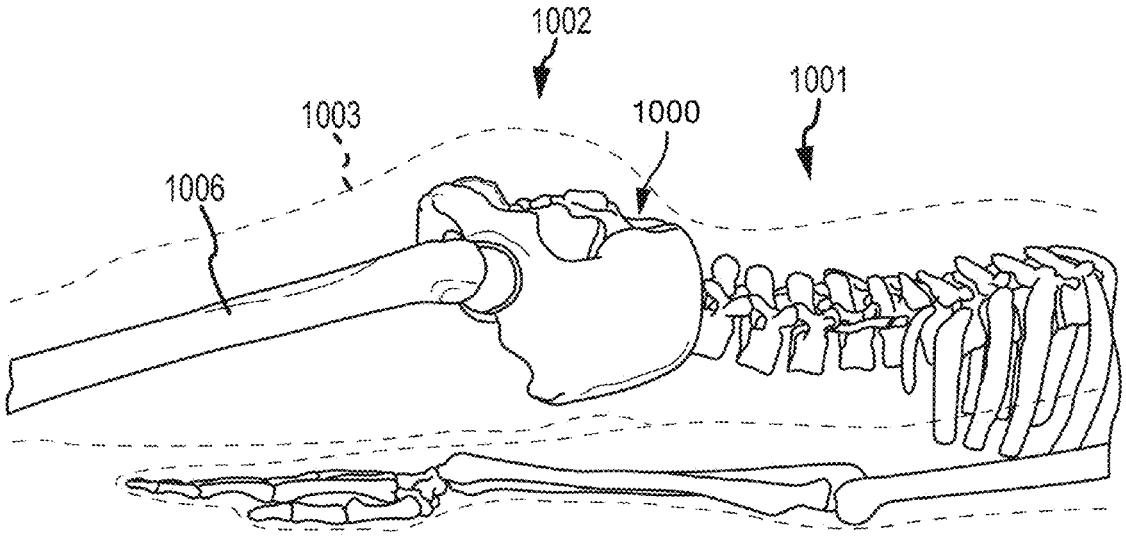

FIG. 48A

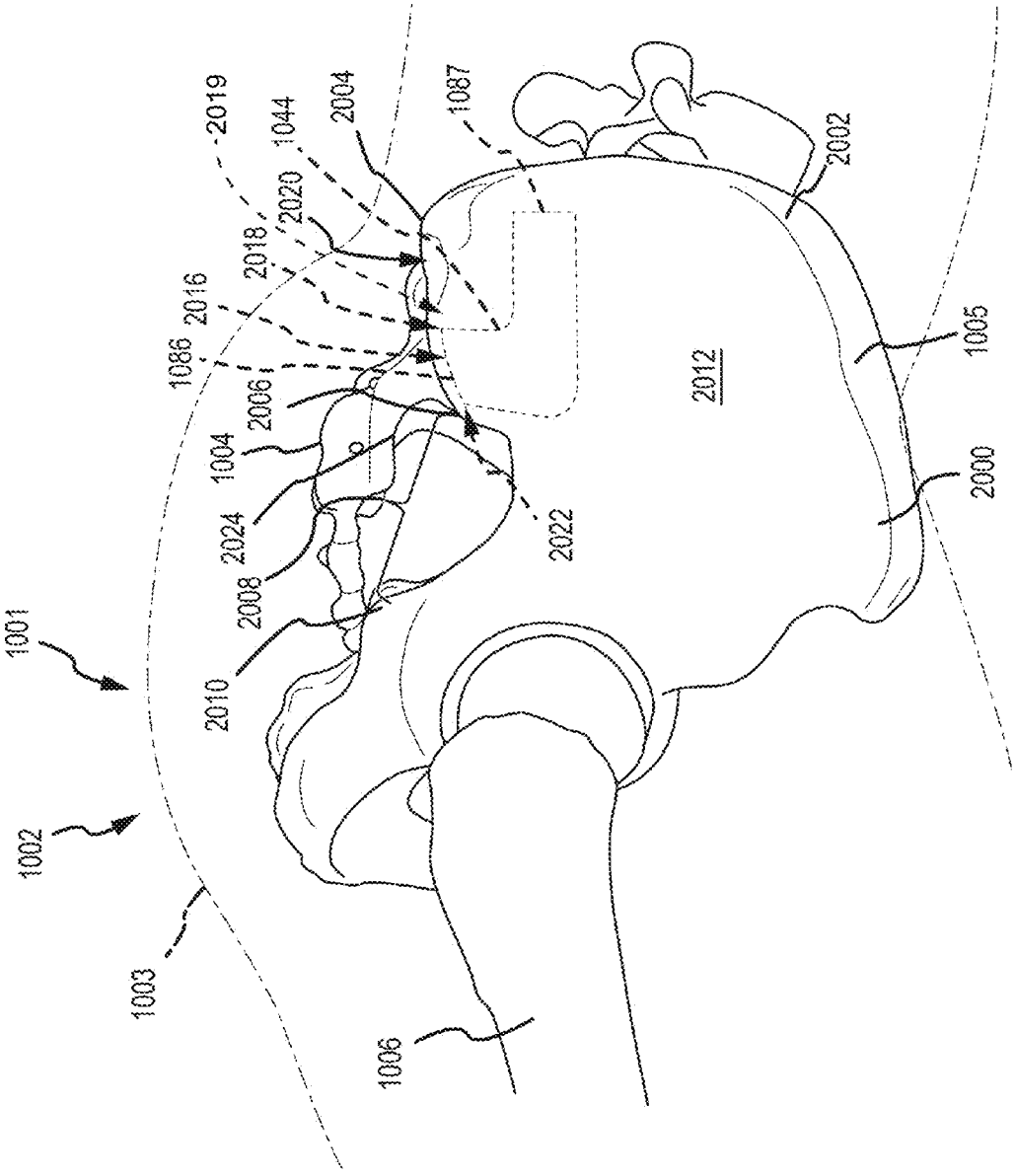
1001
1002
1003
1006
2010
2008
2024
1004
2006
1086
2016
2018
2020
1044
2004
2019
1087
2002
1005
2000
2012
2022

FIG. 48B

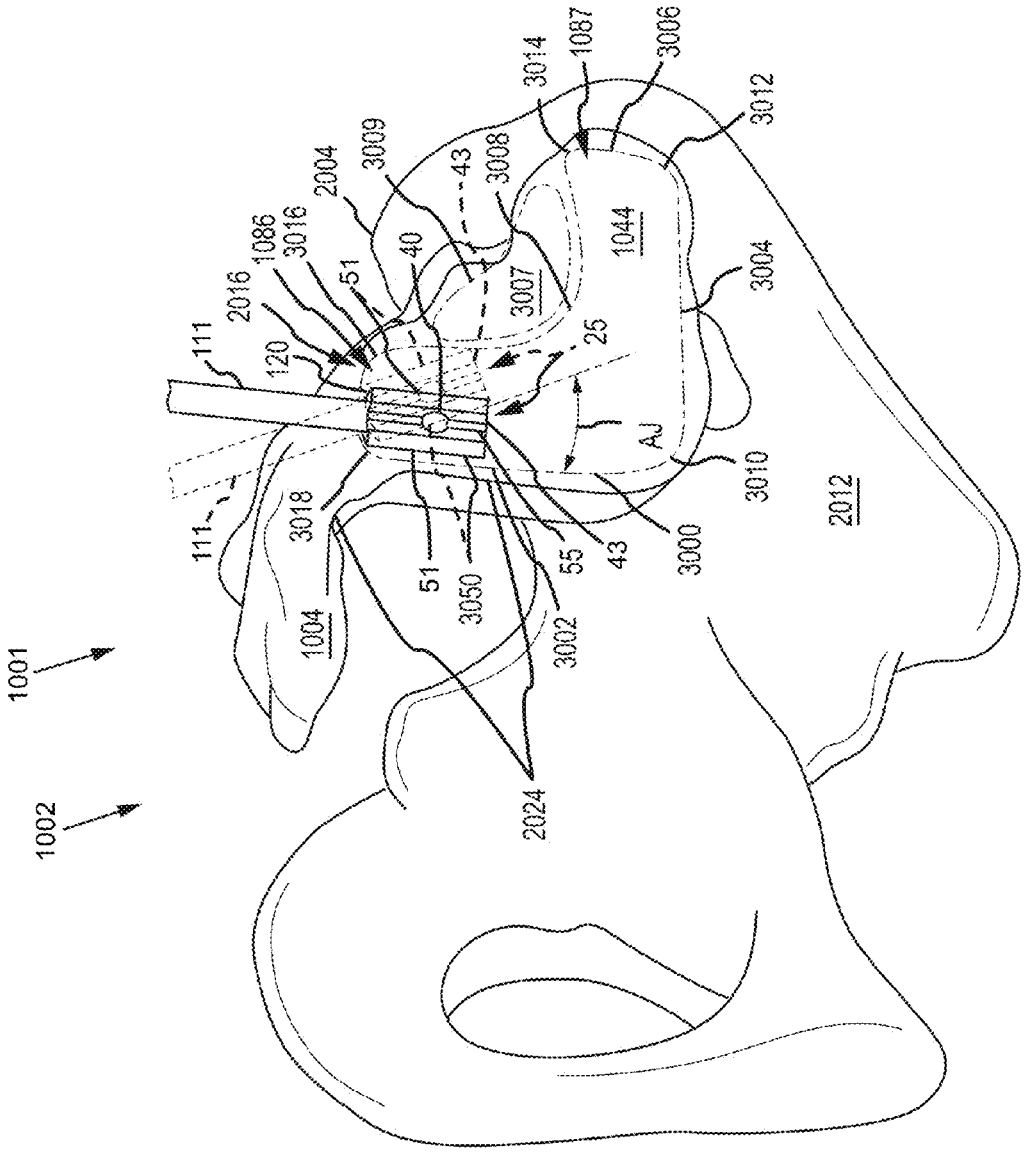
1001
1002
111
111
120
2016
1086
3016
51
40
2004
3009
43
3008
3007
25
3014
1087
3006
3012
1044
3004
AJ
3010
2012
3000
43
55
3002
3050
51
3018
1004
2024

FIG. 48C

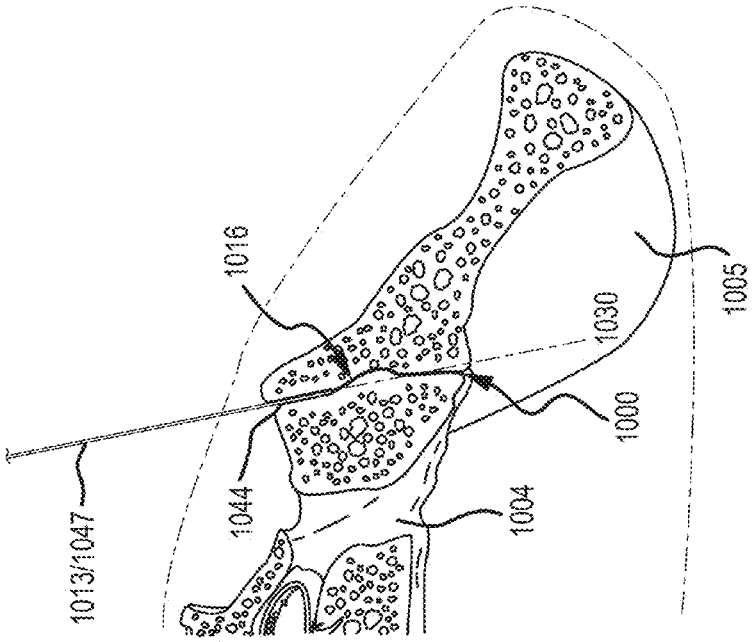

FIG. 49B

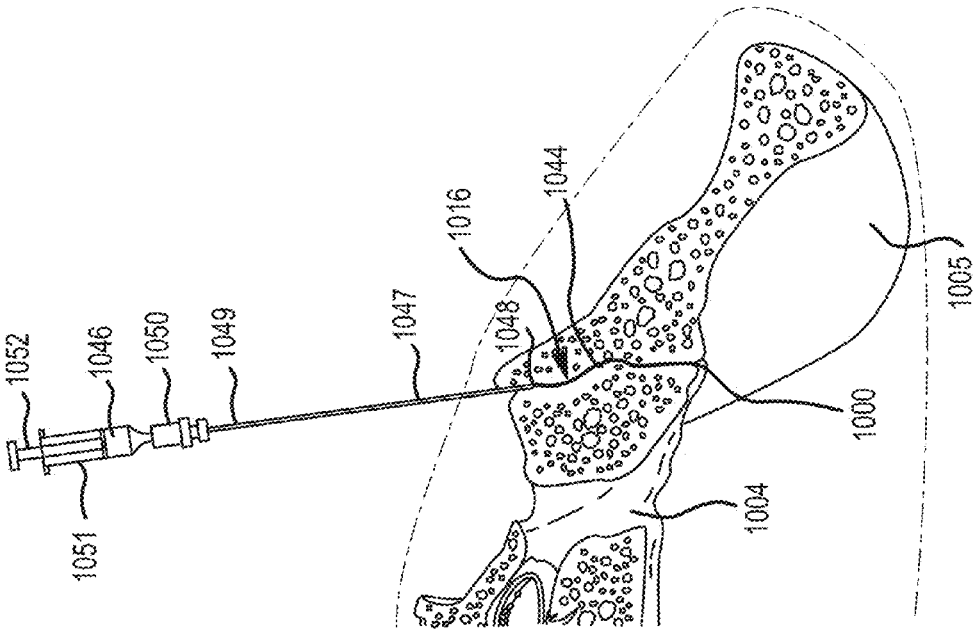

FIG. 49A

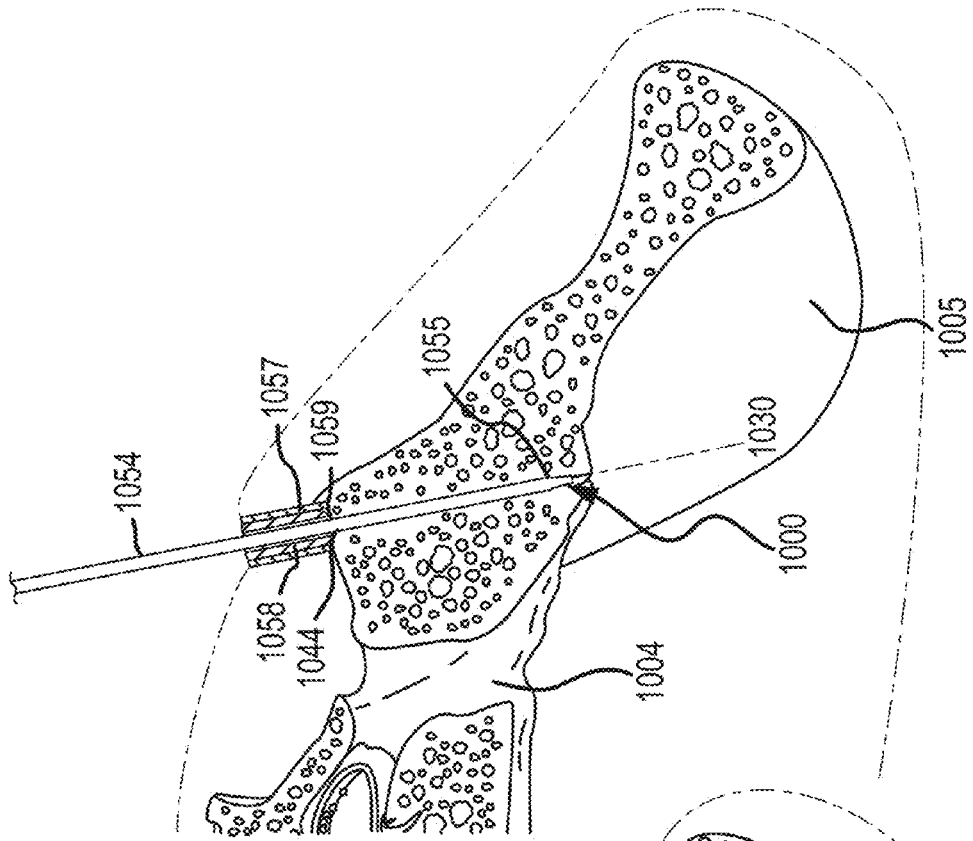

FIG. 49D

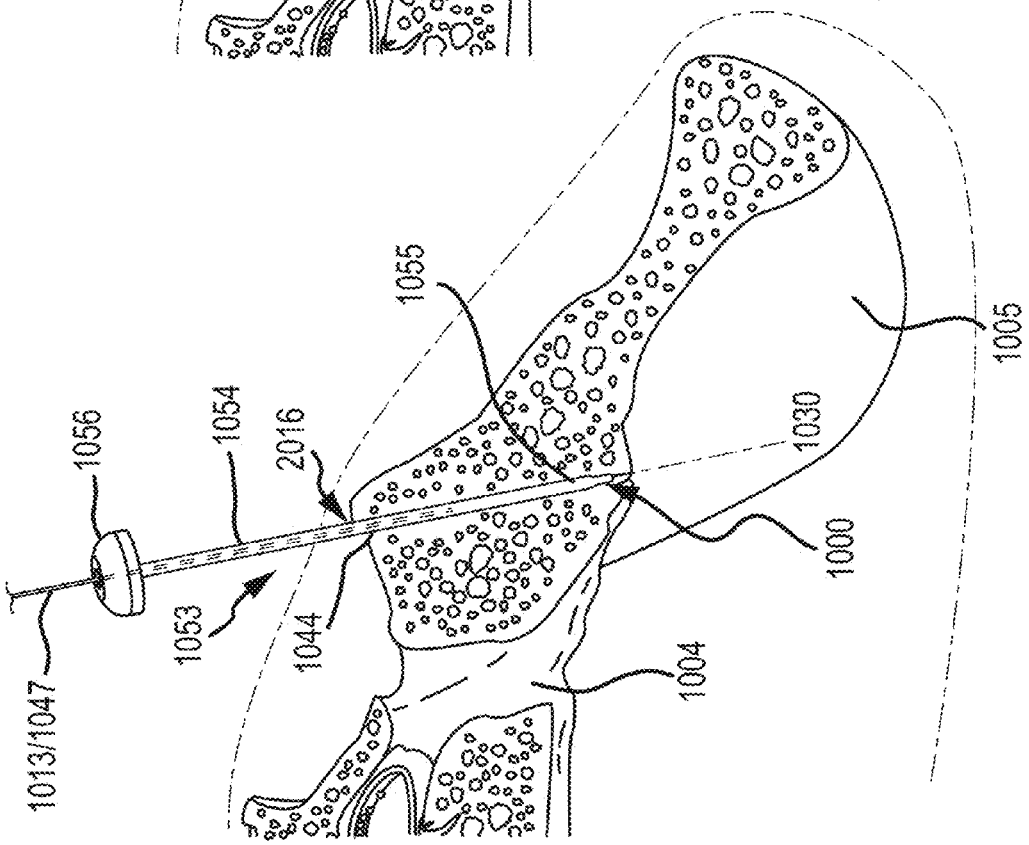

FIG. 49C

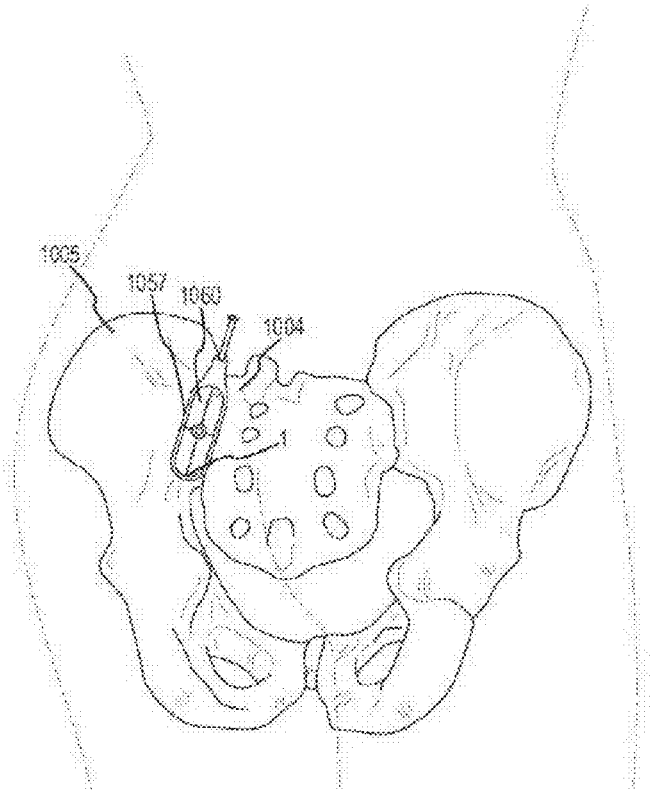

FIG. 49E

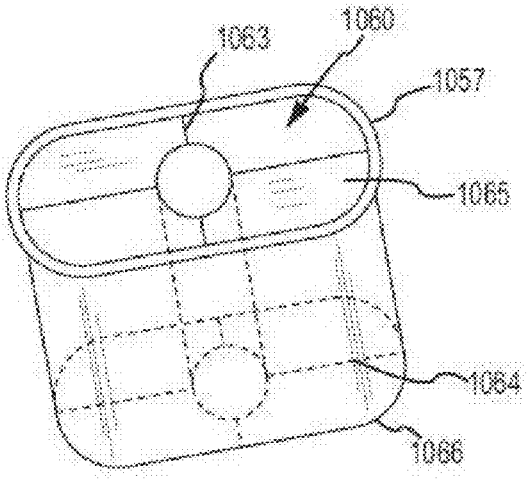

FIG. 49F

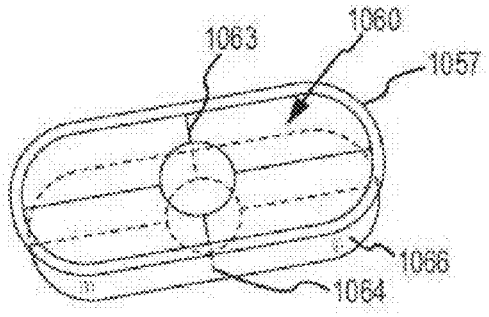

FIG. 49G

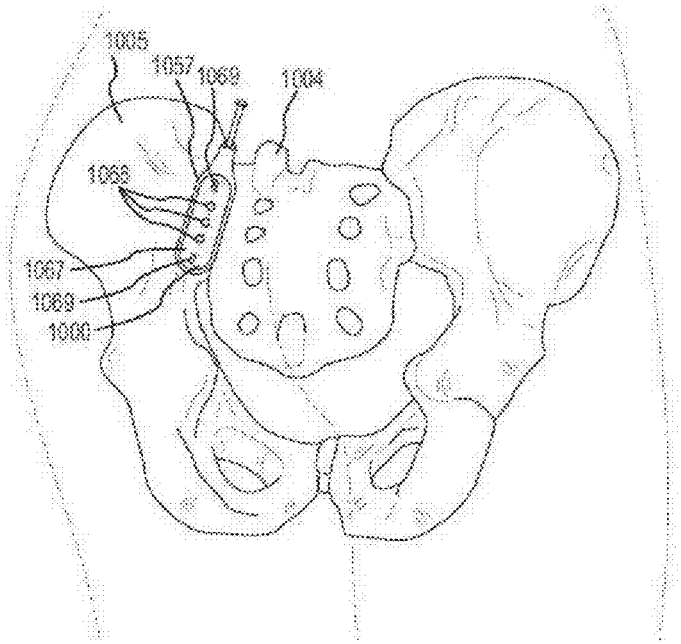

FIG. 49H

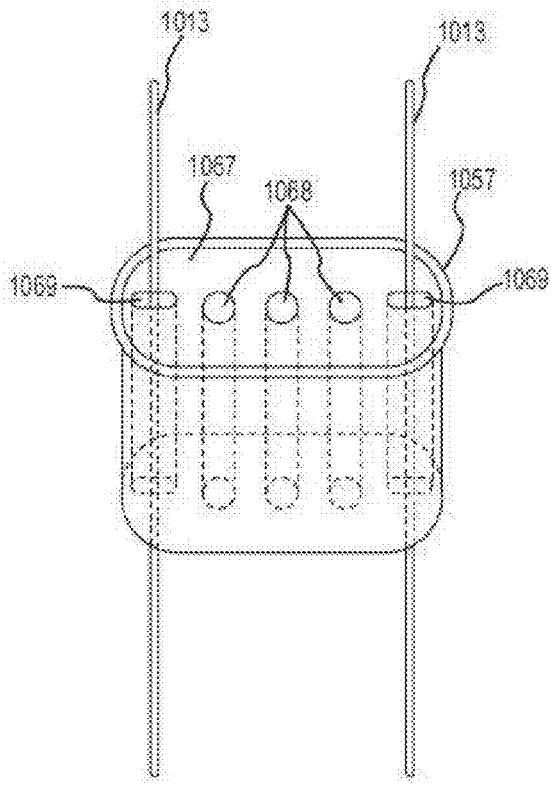

FIG. 49I

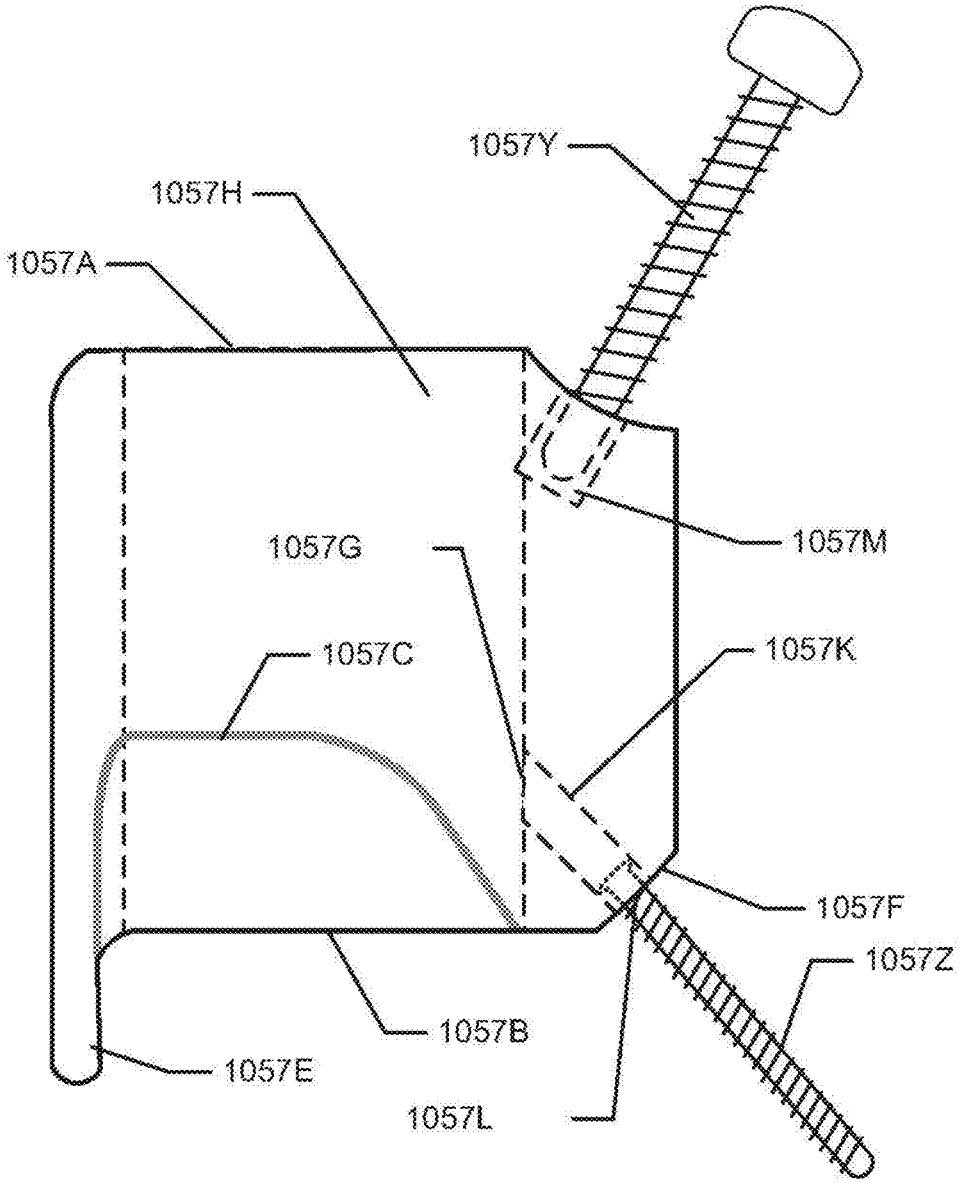
1057Y
1057H
1057A
1057M
1057G
1057C
1057K
1057F
1057Z
1057B
1057E
1057L

FIG. 49J

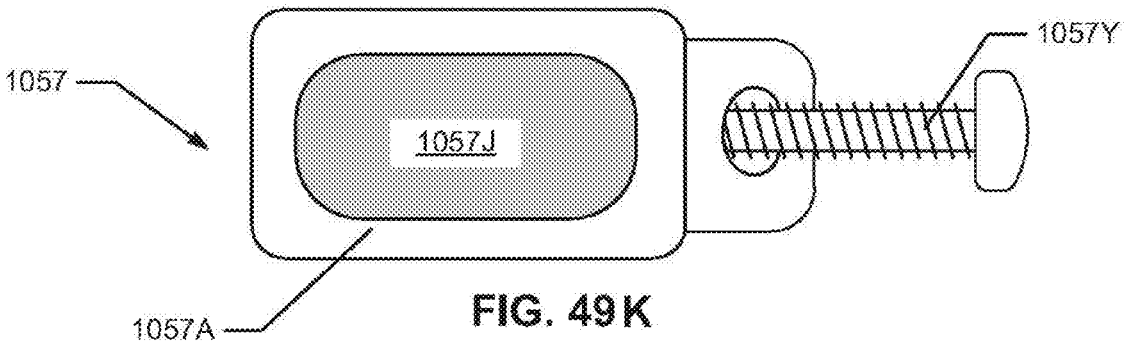

FIG. 49K

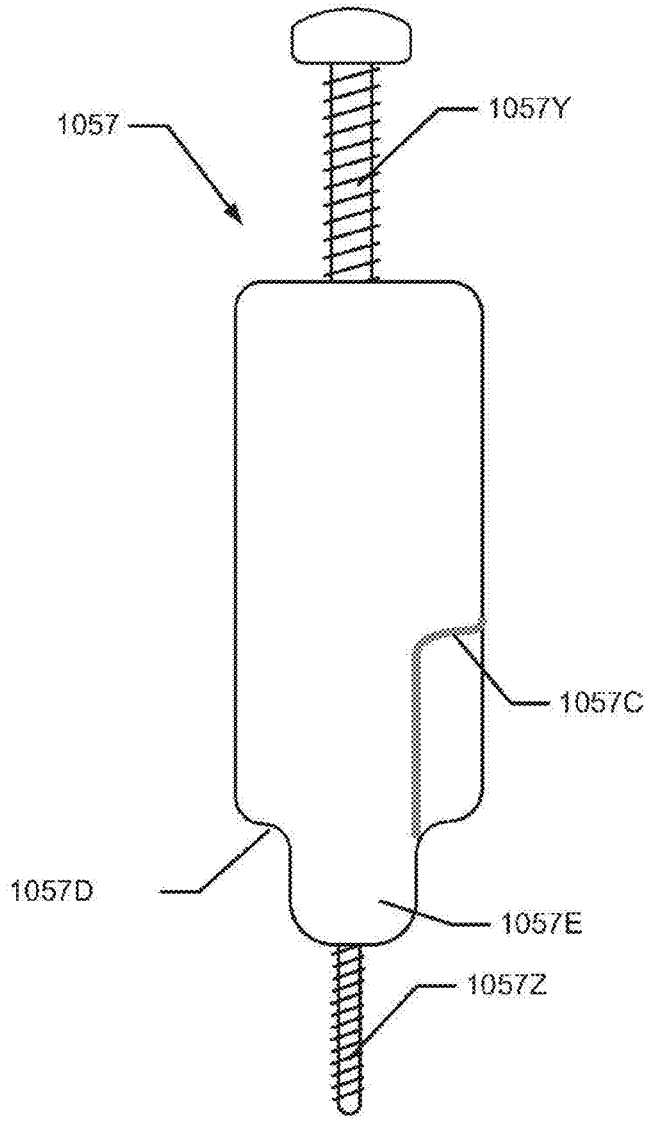

FIG. 49L

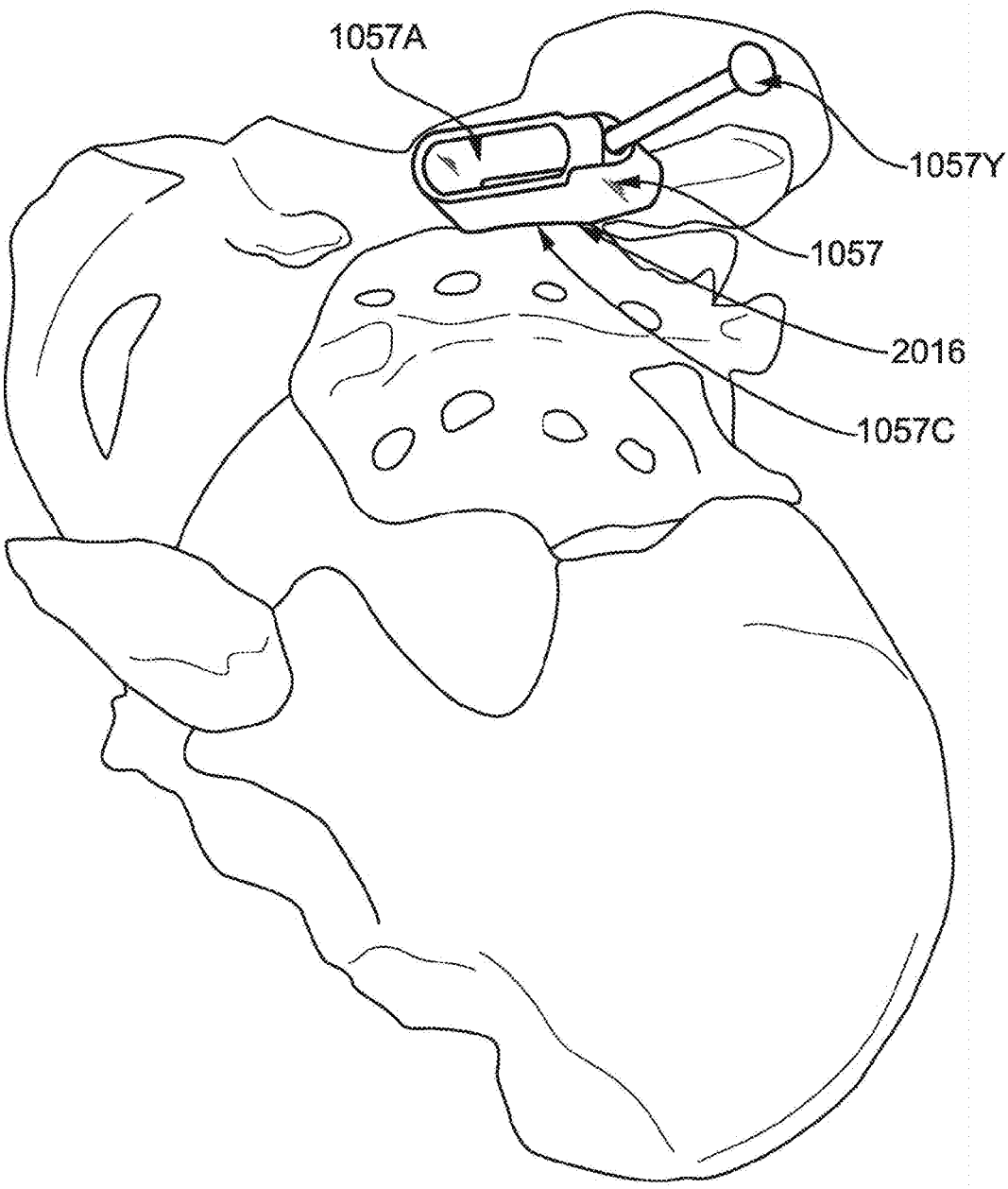

FIG. 49M

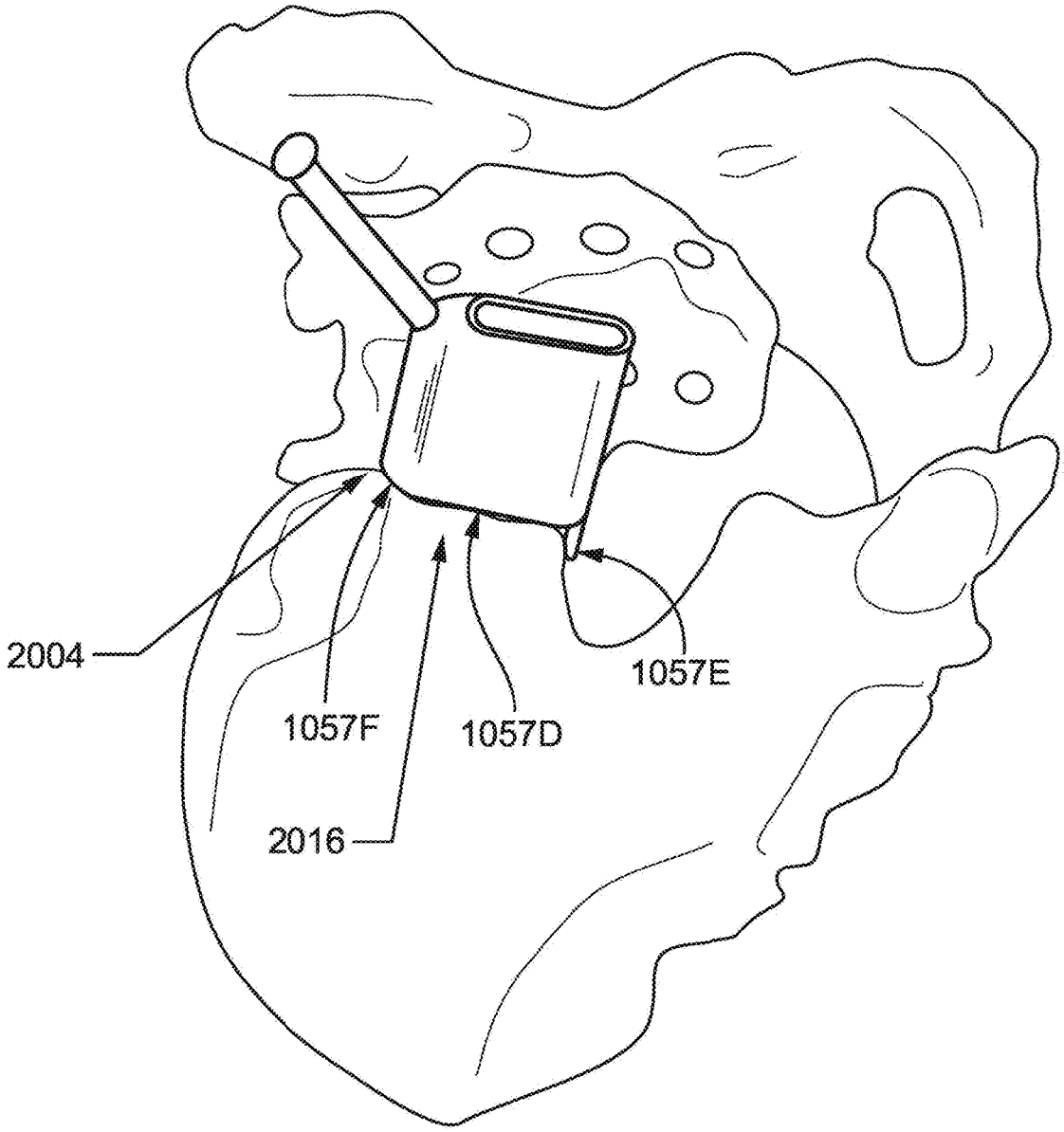

FIG. 49N

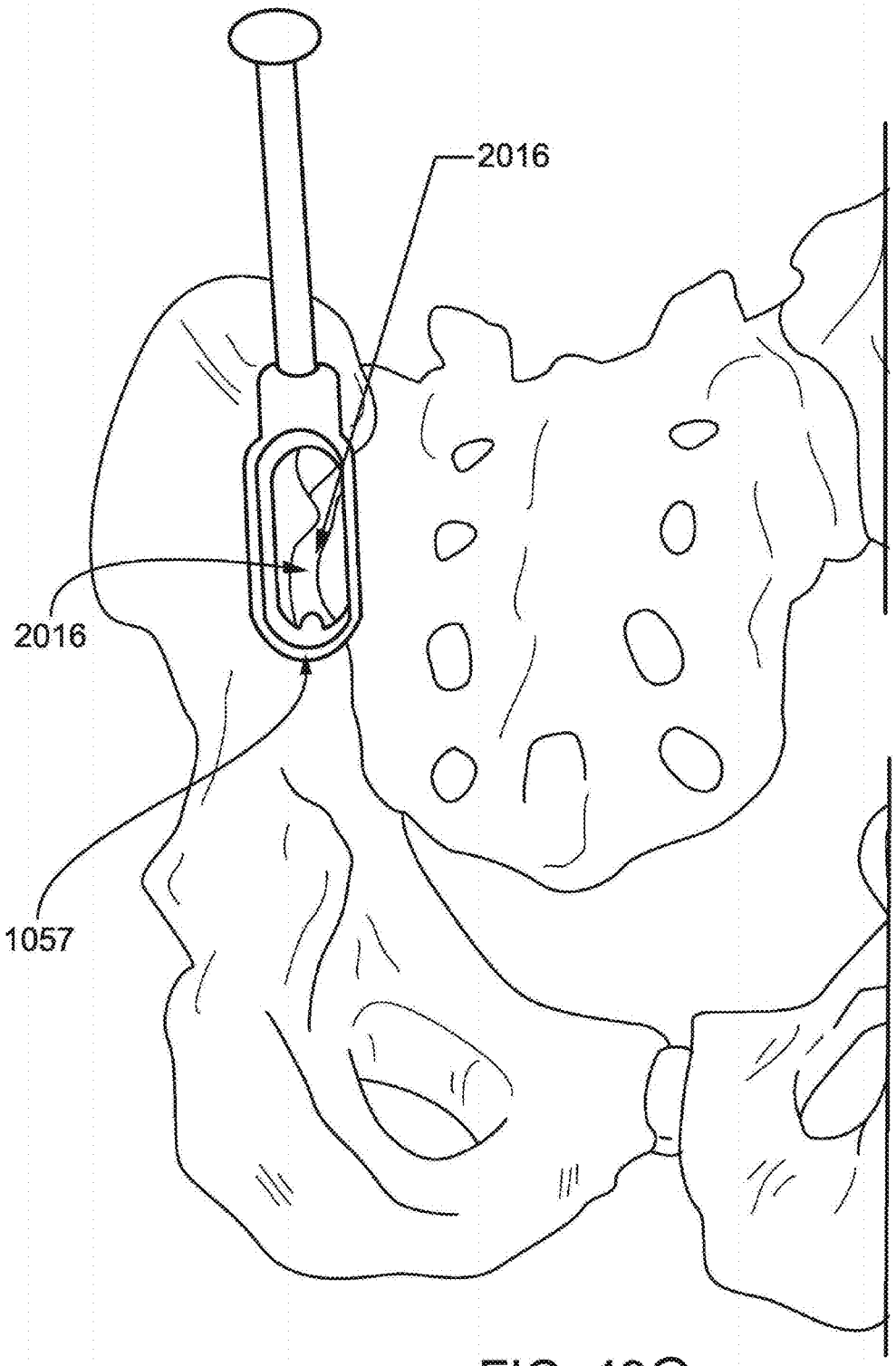

FIG. 49O

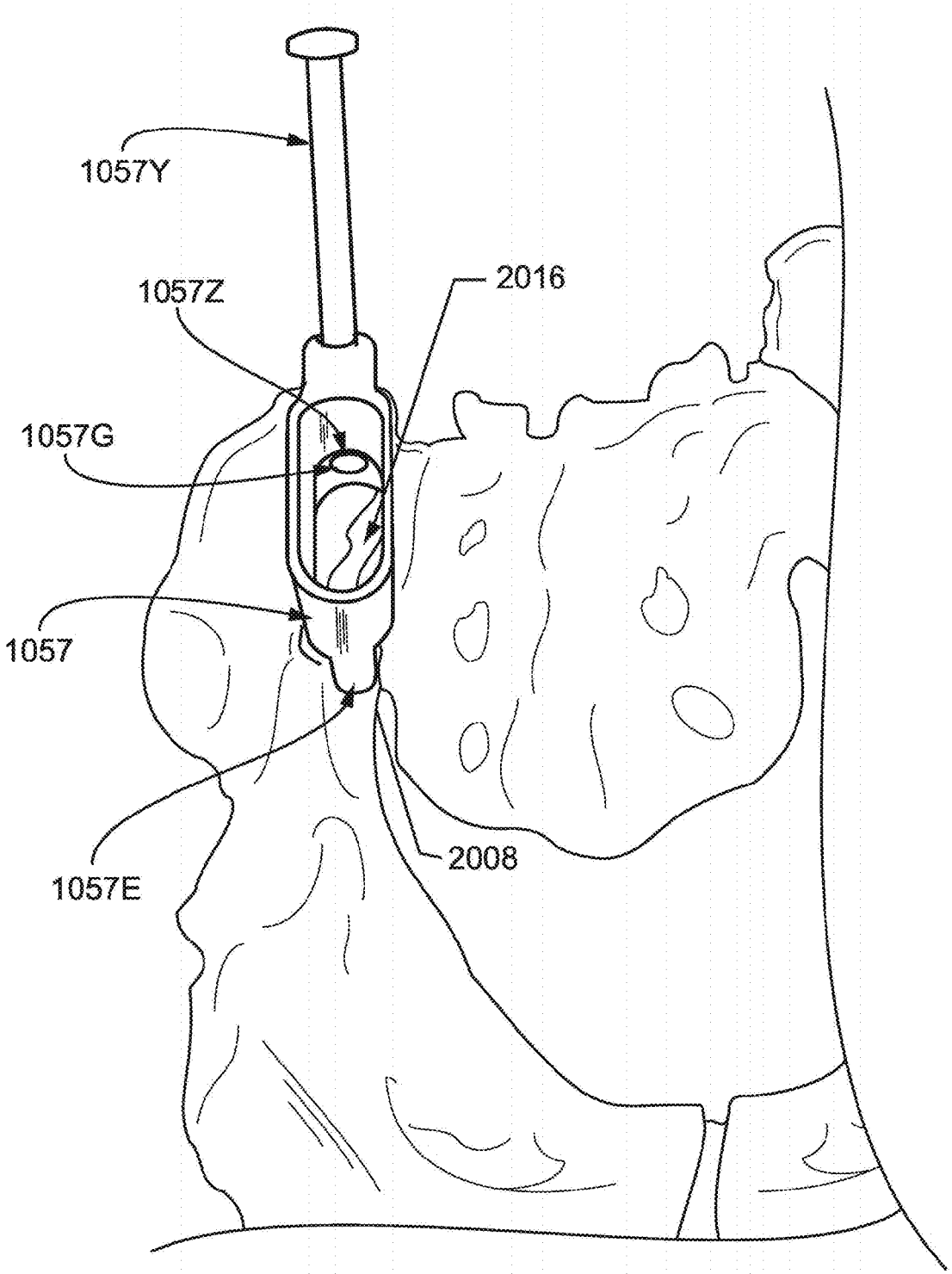

FIG. 49P

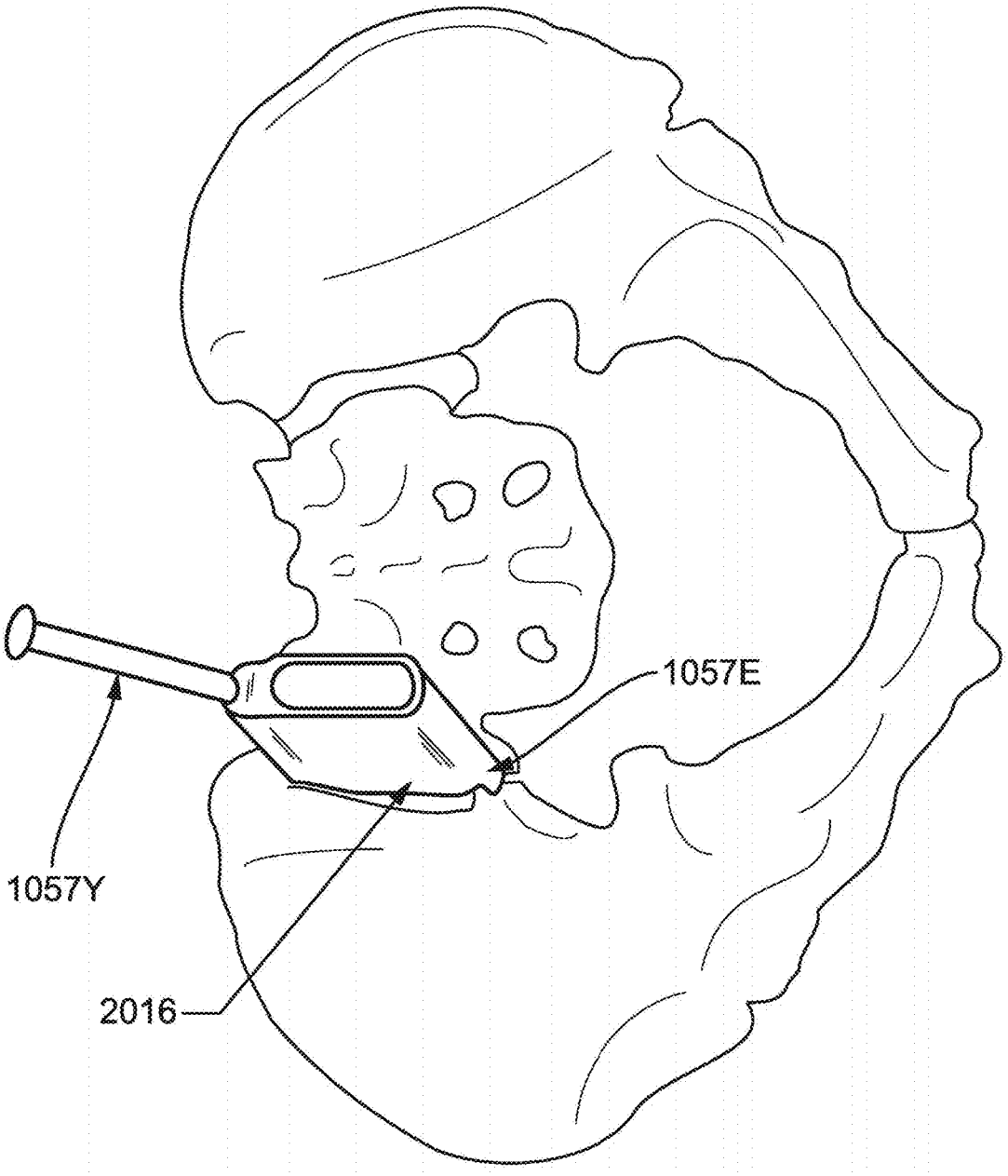

FIG. 49Q

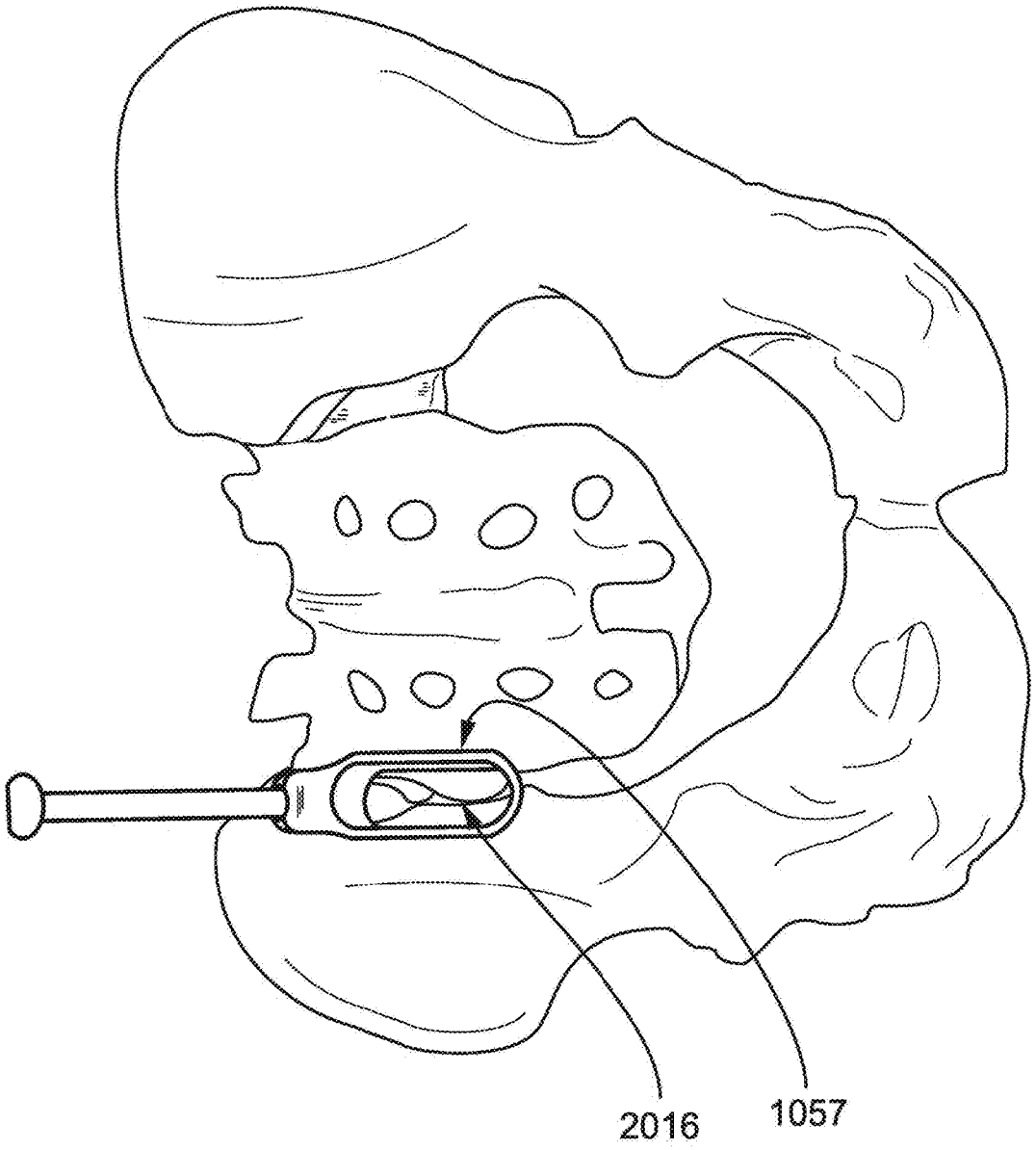

FIG. 49R

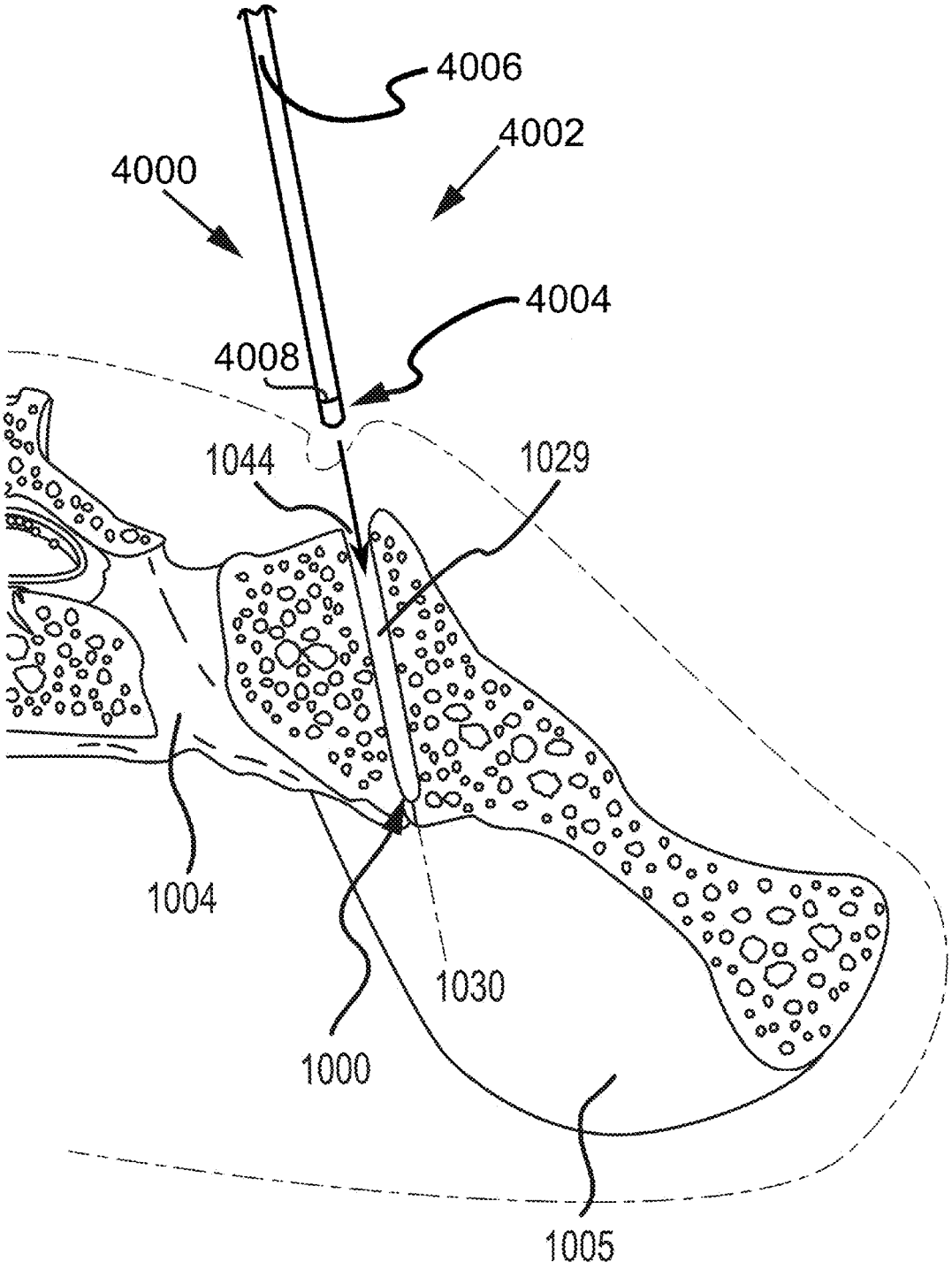

FIG. 50A

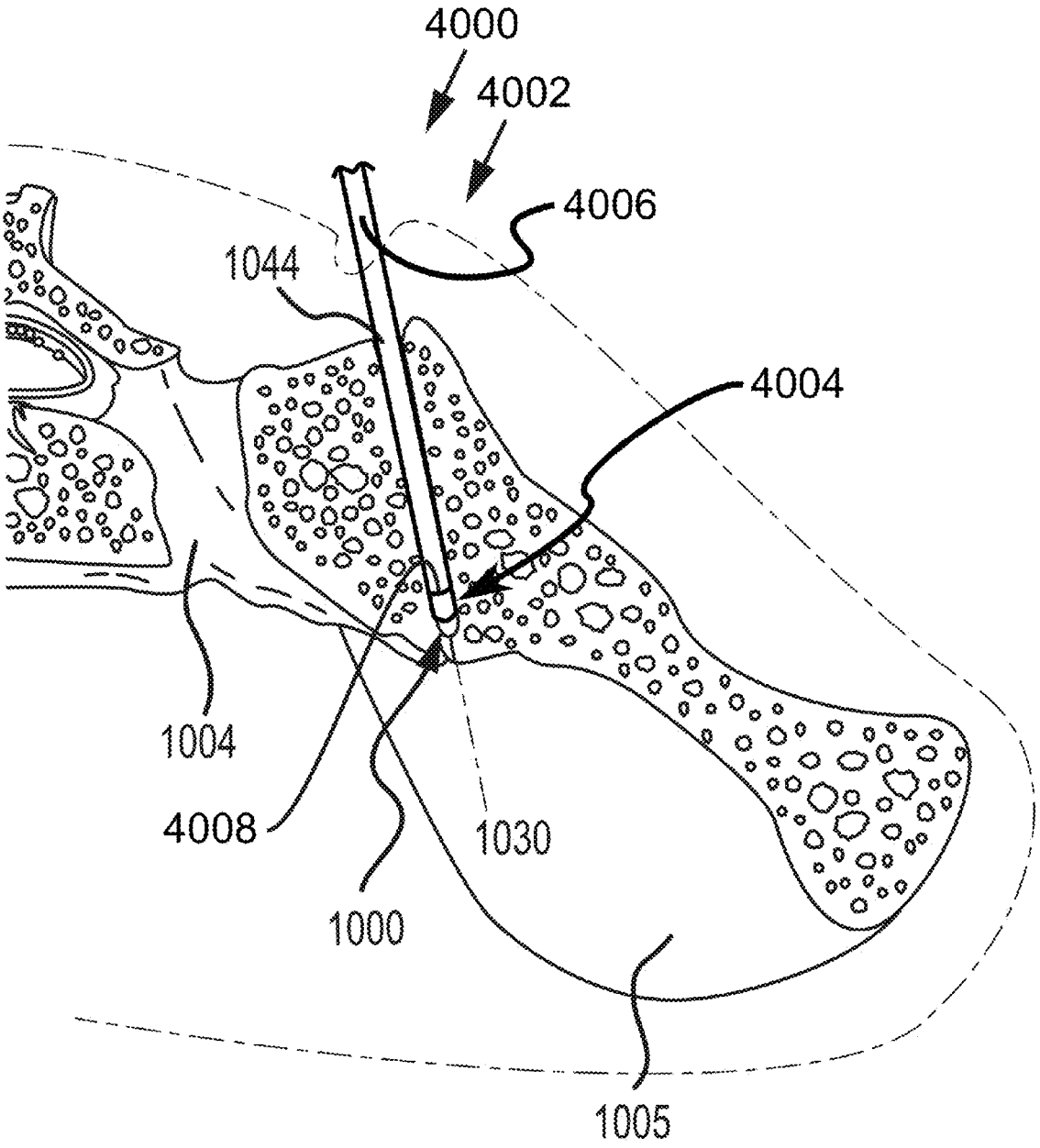

FIG. 50B

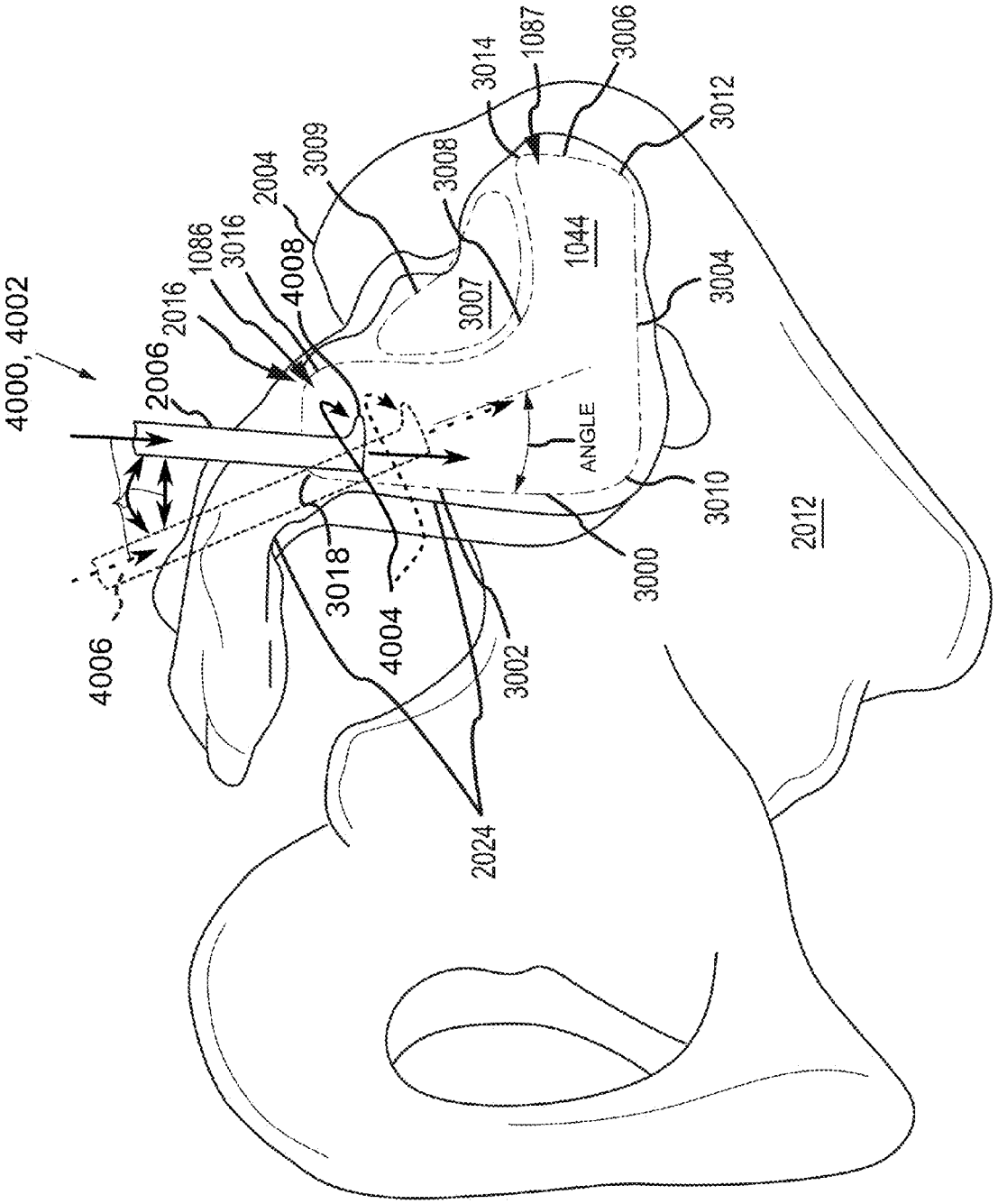
4000, 4002
2006
2016
1086
3016
2004
4008
3009
3008
3014
1087
3006
3012
3007
1044
3004
ANGLE
3010
2012
3000
3018
4004
3002
4006
2024

FIG. 50C

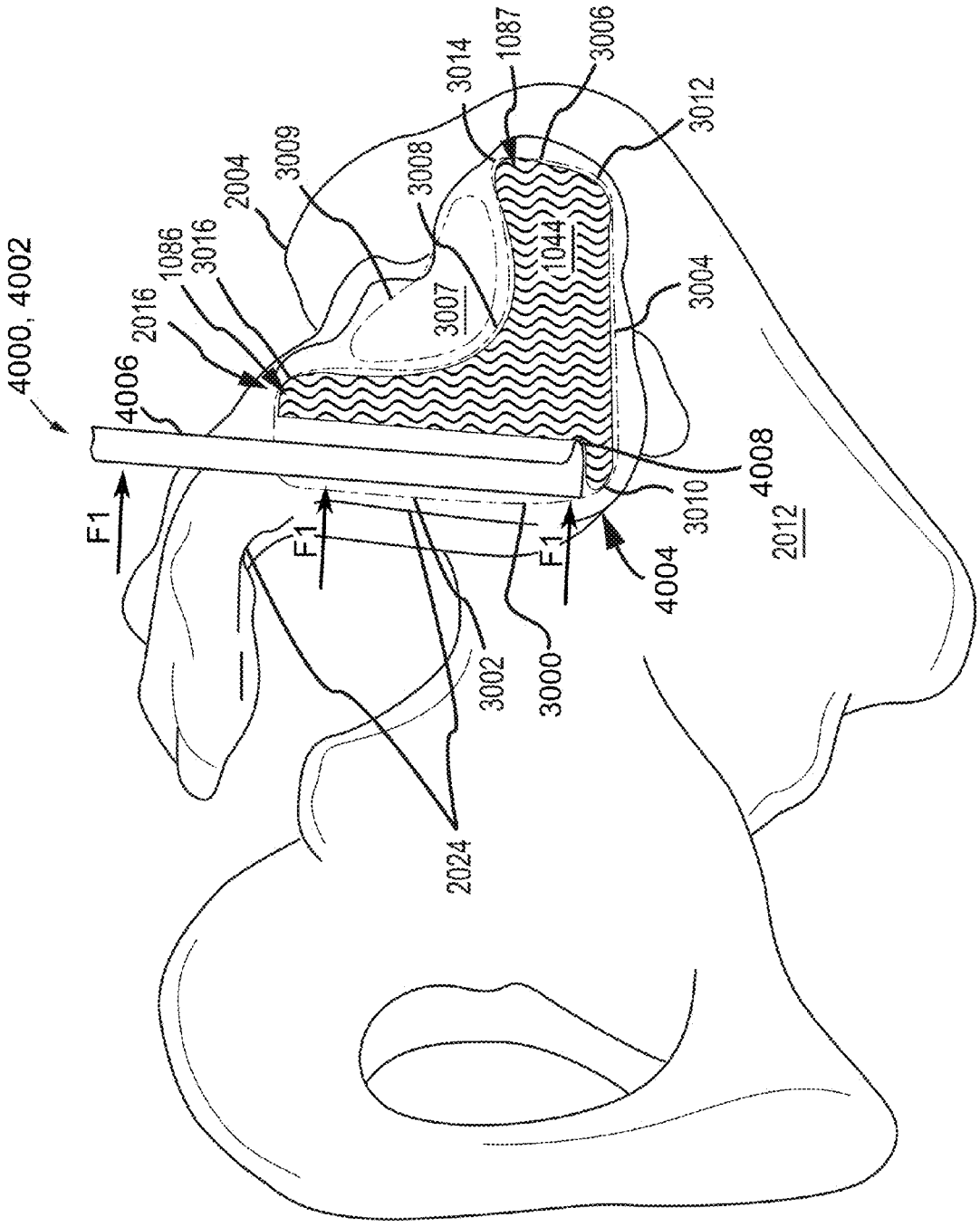
4000, 4002
4006
2016
1086
3016
2004
3009
3008
3014
1087
3006
3012
3007
1044
3004
4008
3010
4004
2012
3002
3000
2024
F1
F1
F1

FIG. 50D

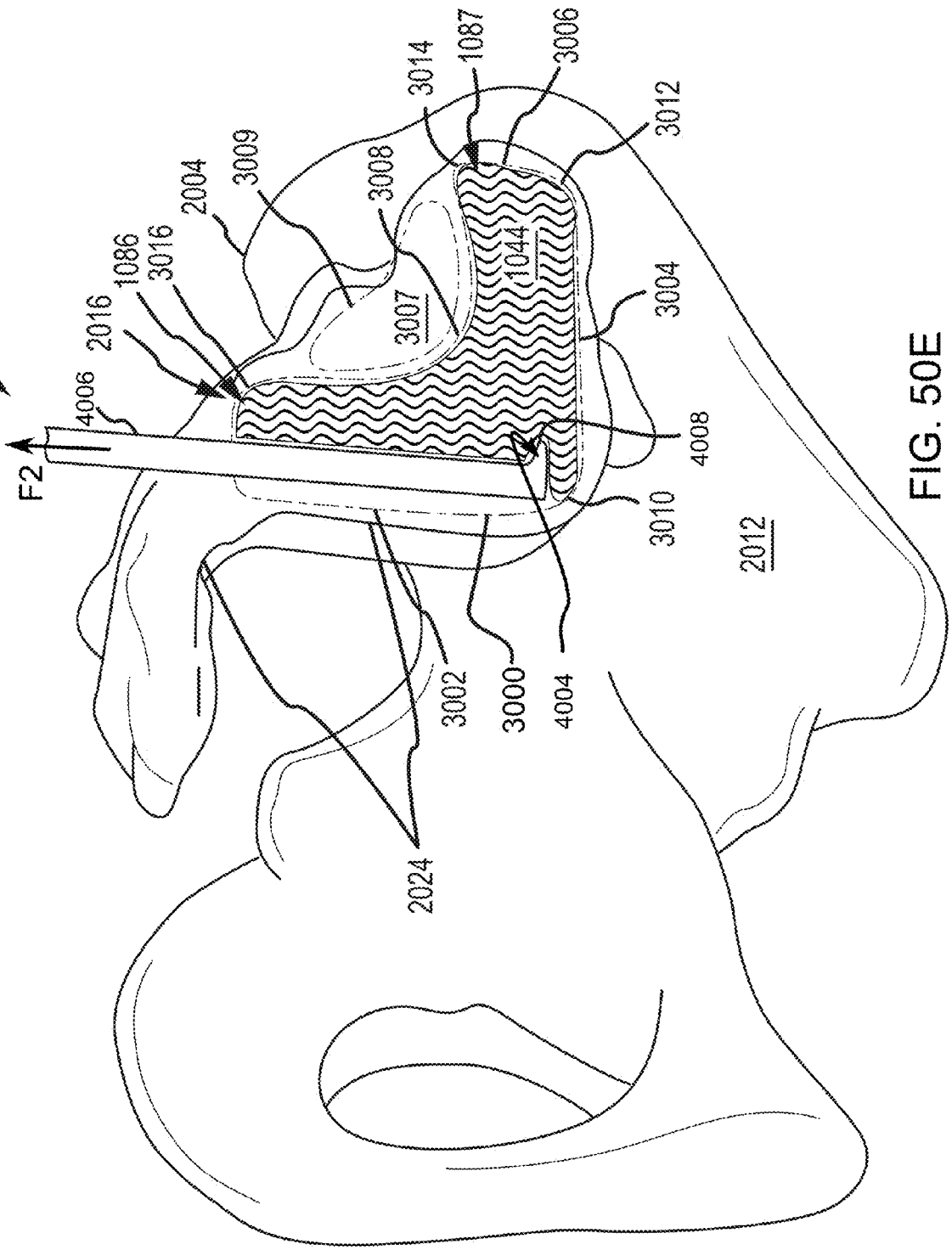
4000, 4002
F2
4006
2016
1086
3016
2004
3009
3008
3014
1087
3006
3012
3007
1044
3004
4008
3010
2012
3002
3000
4004
2024

FIG. 50E

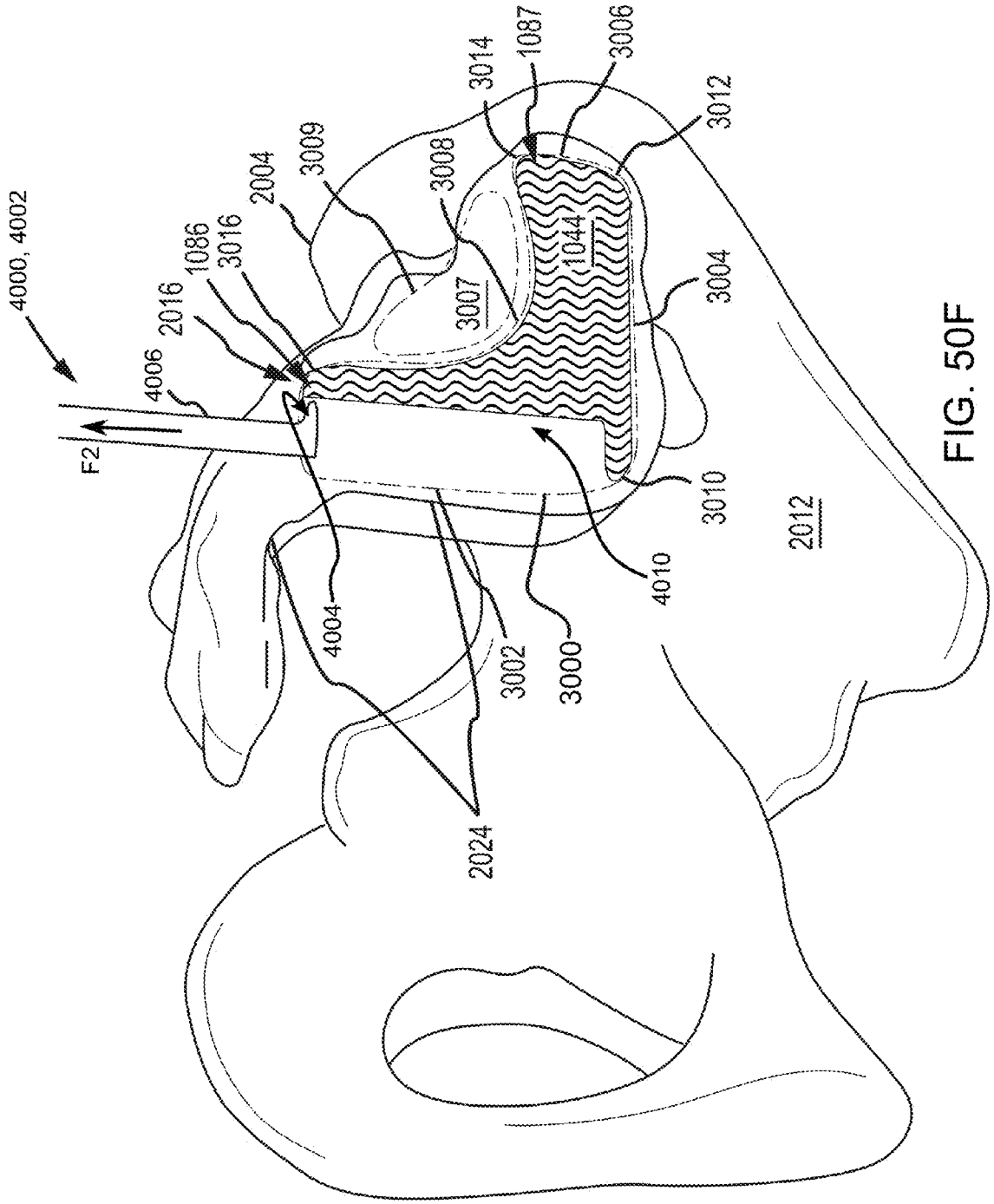
4000, 4002
F2
4006
2016
1086
3016
2004
3009
3008
3014
1087
3006
3012
3007
1044
3004
3010
2012
4010
4004
3002
3000
2024

FIG. 50F

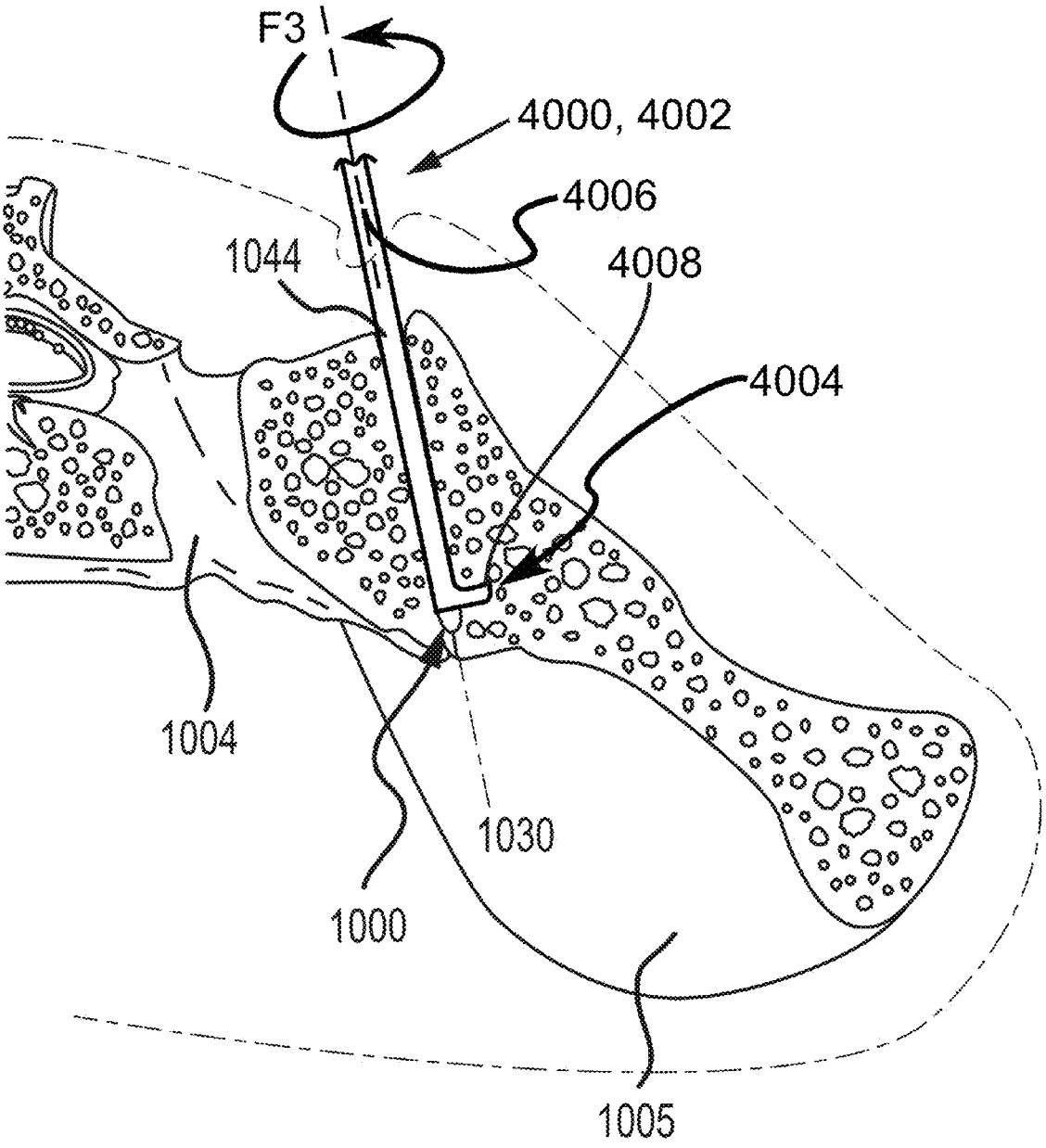

FIG. 51A

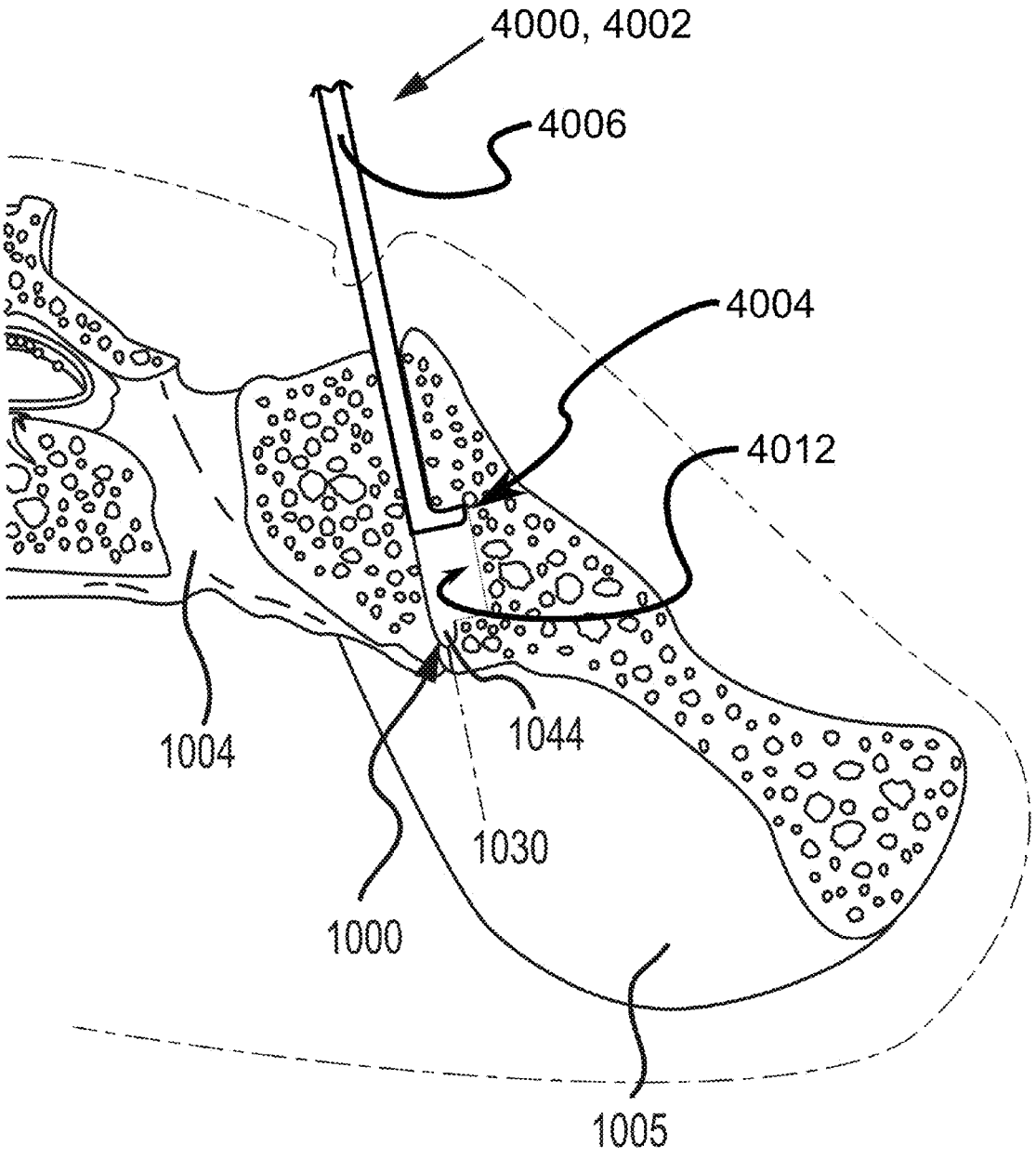

FIG. 51B

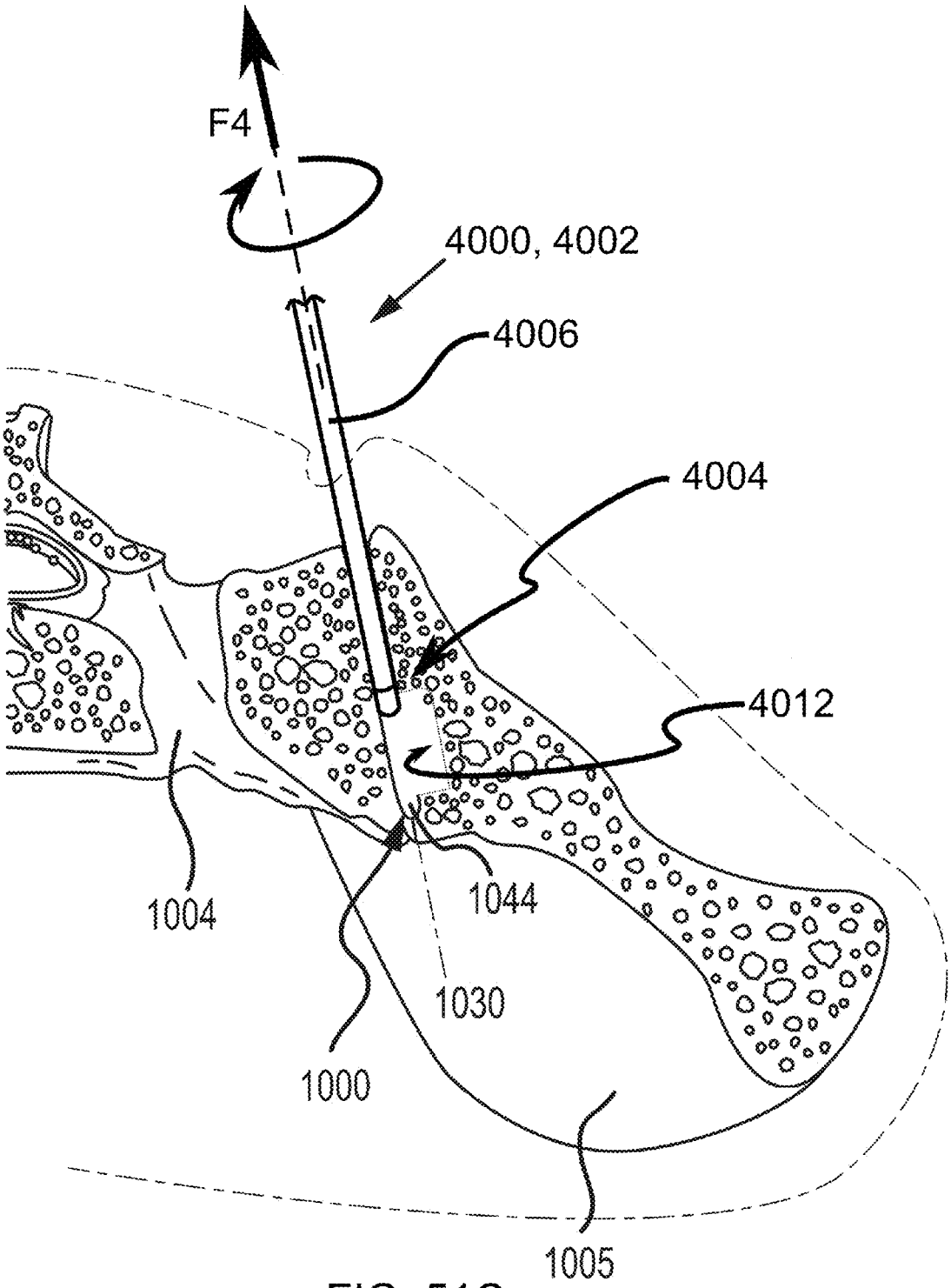

FIG. 51C

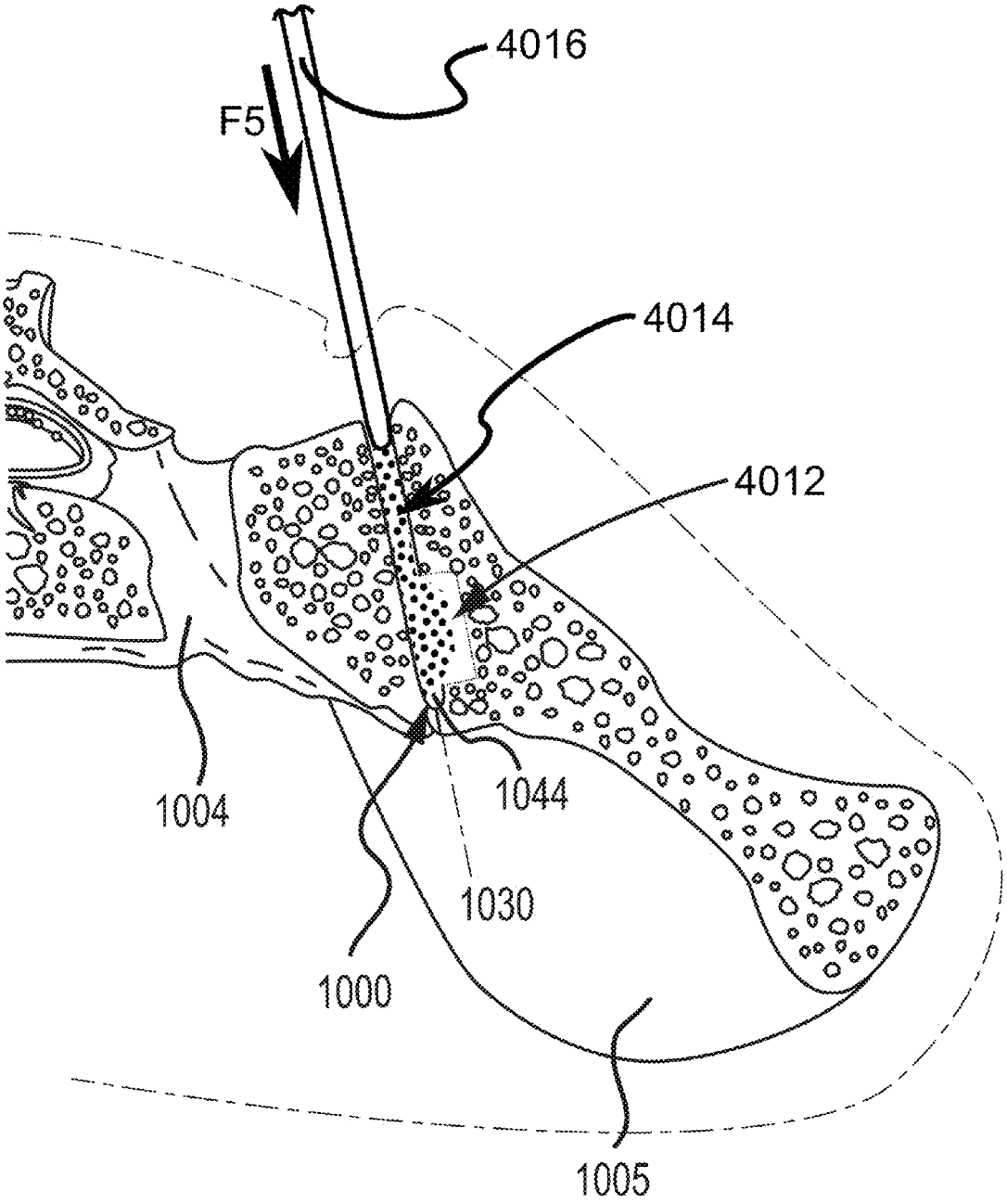

FIG. 51D

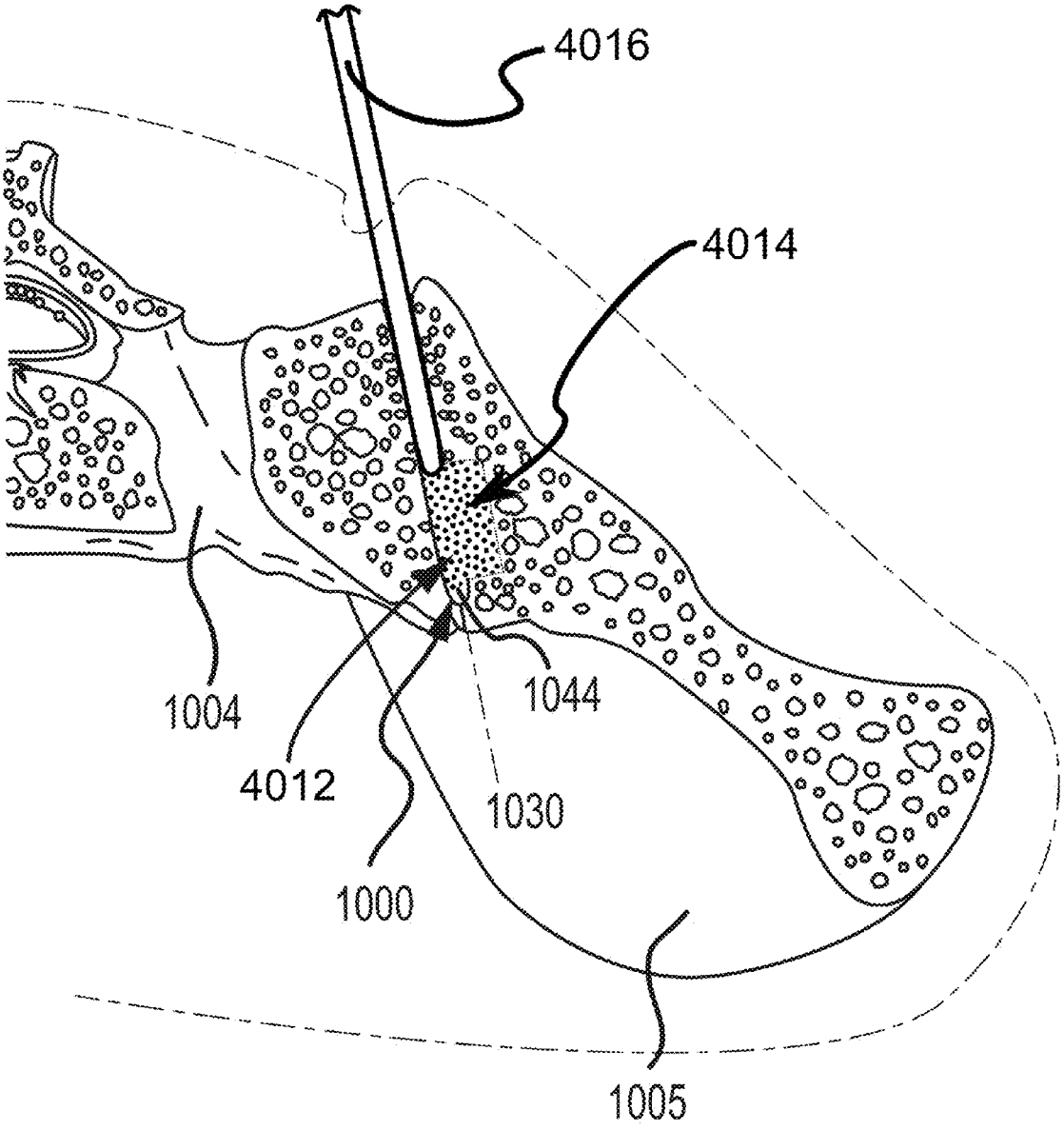

FIG. 51E

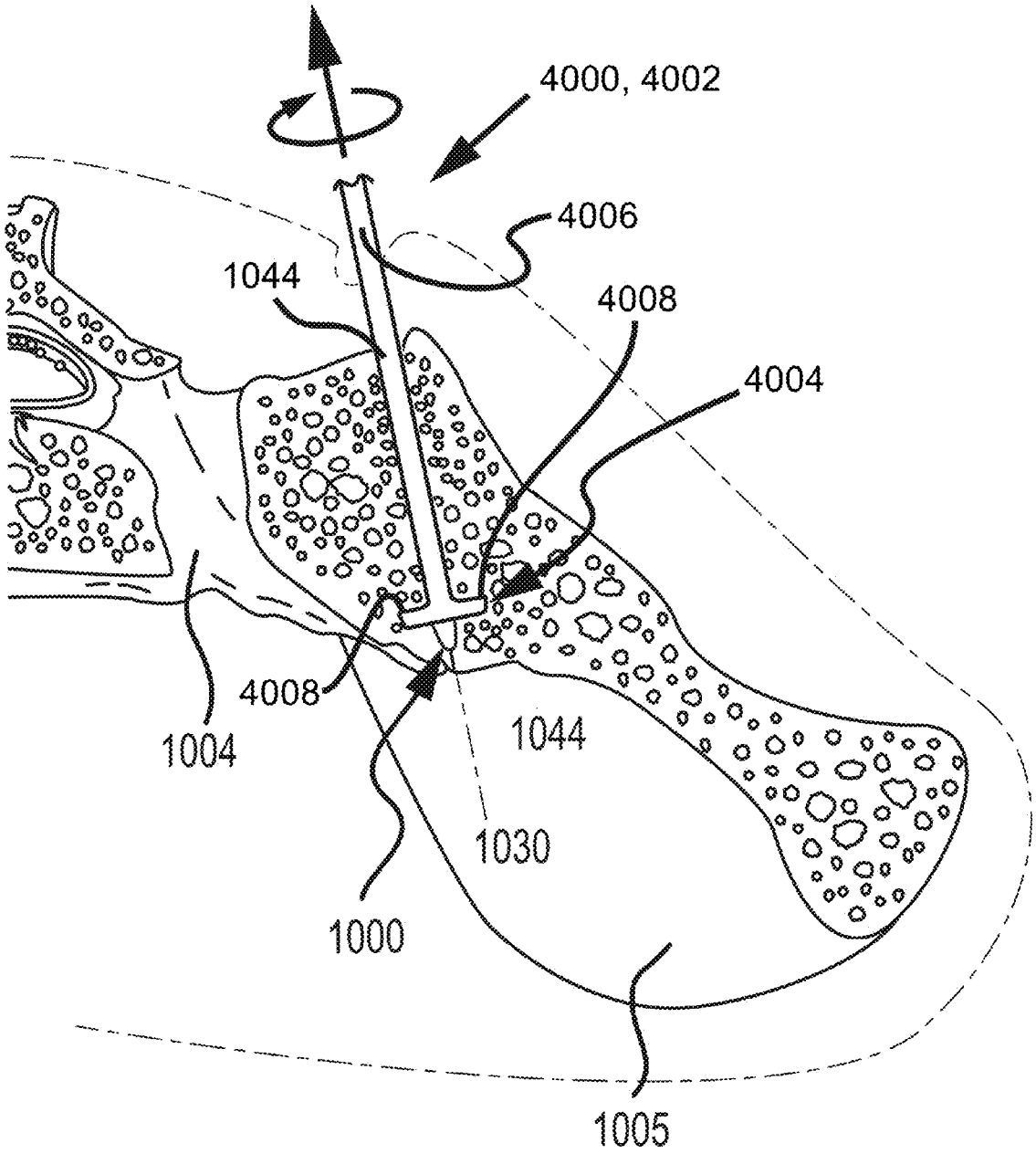

FIG. 52A

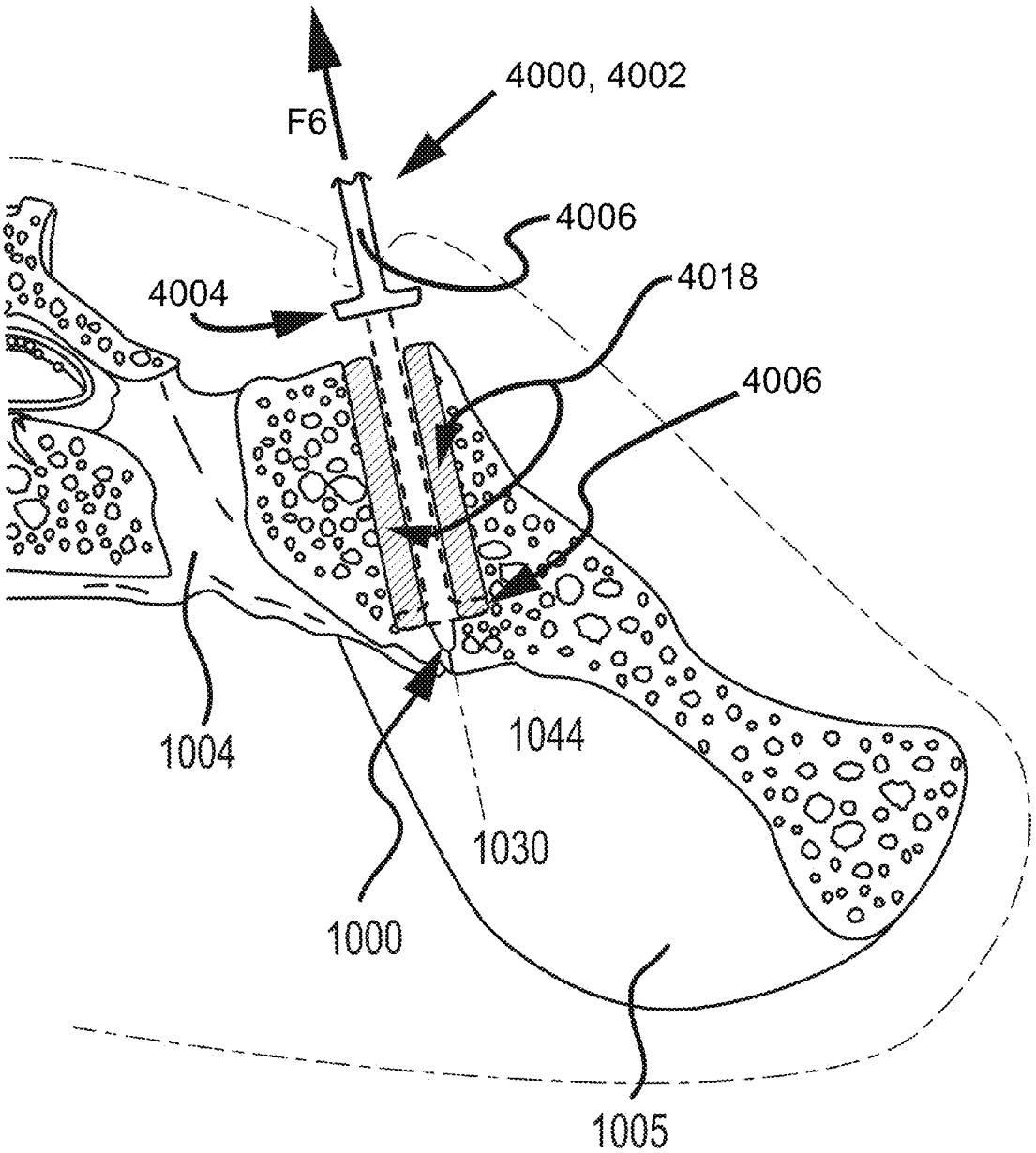

FIG. 52B

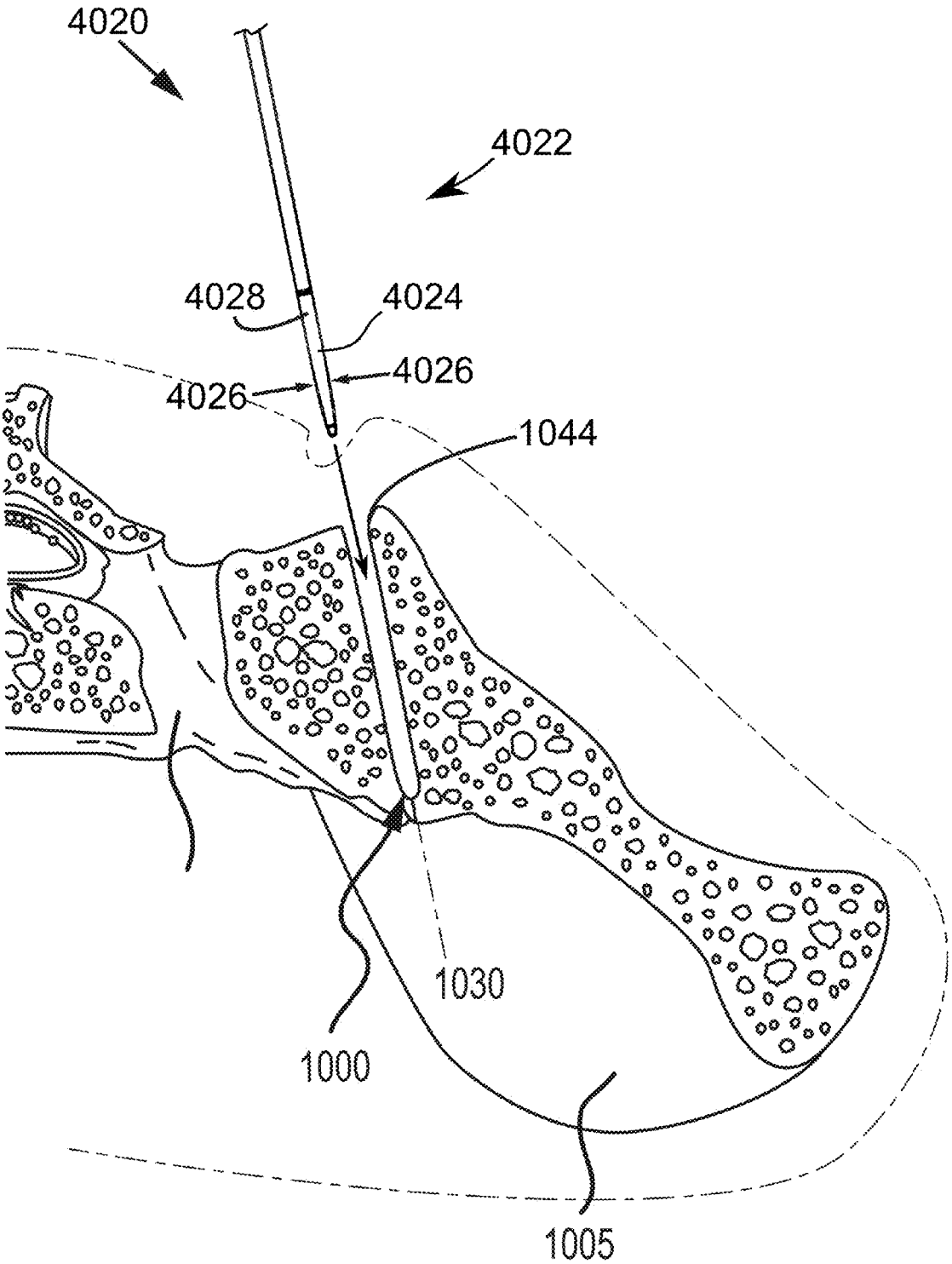

FIG. 53A

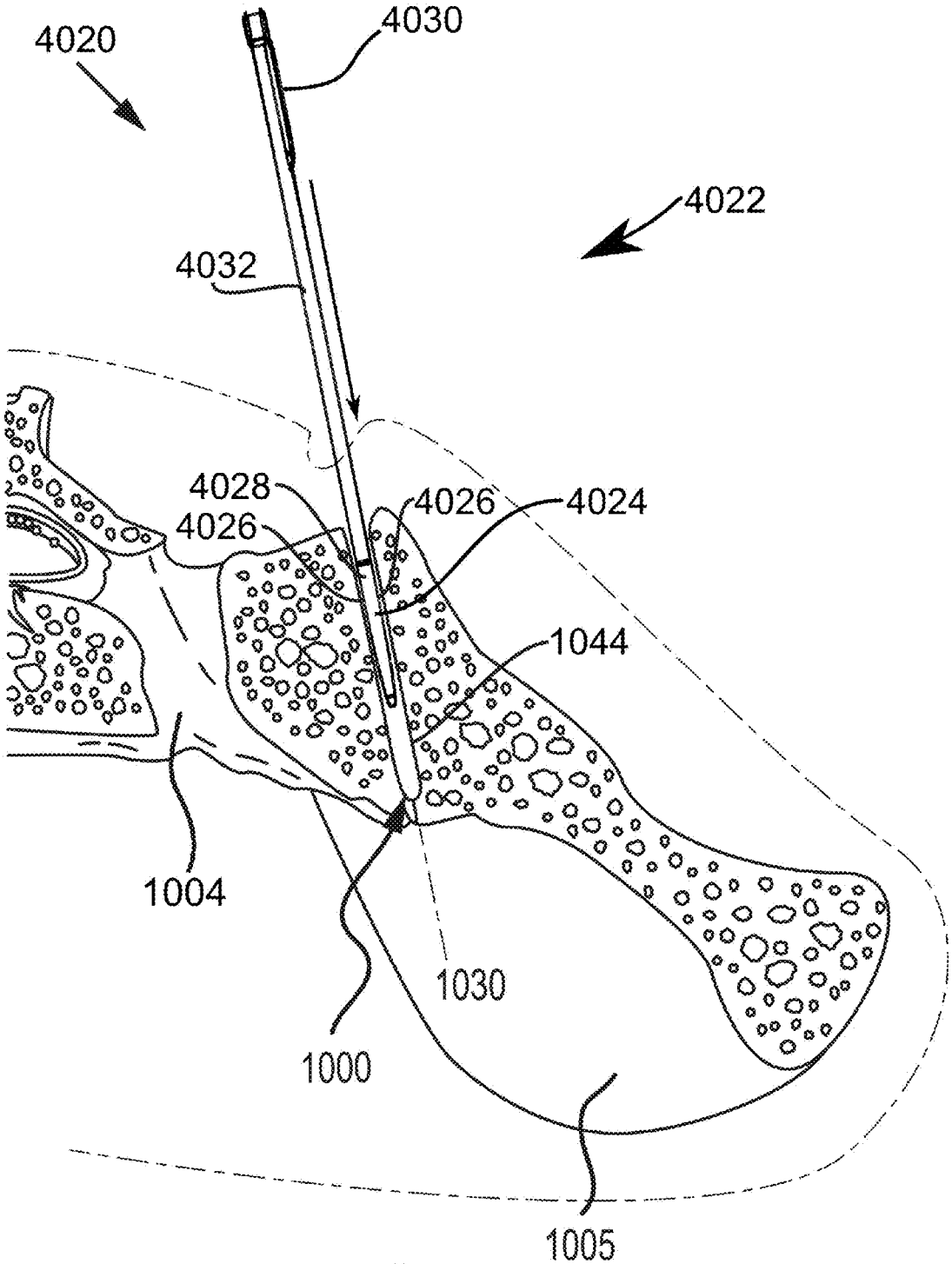
4020
4030
4022
4032
4028
4026
4026
4024
1044
1004
1030
1000
1005

FIG. 53B

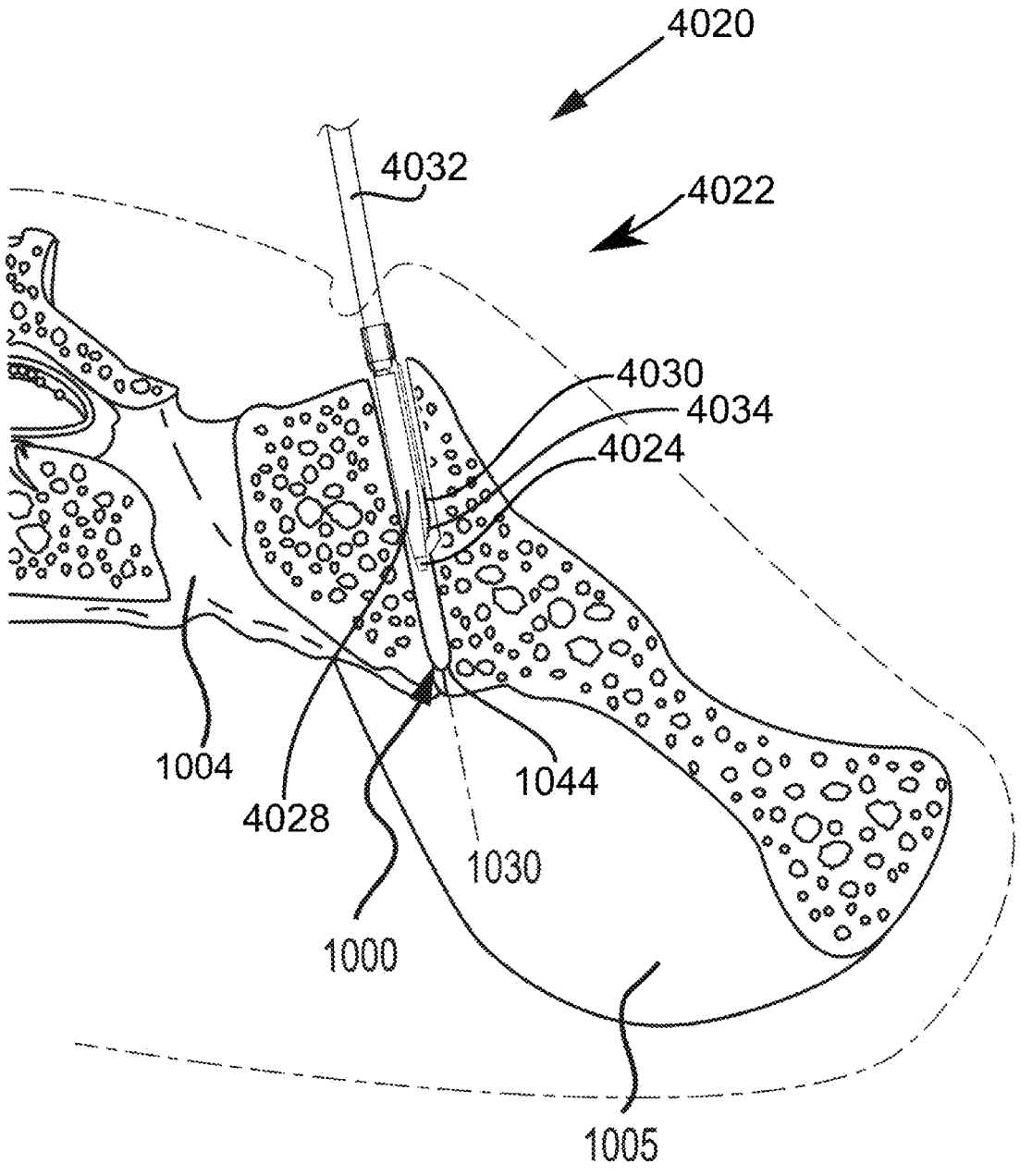

FIG. 53C

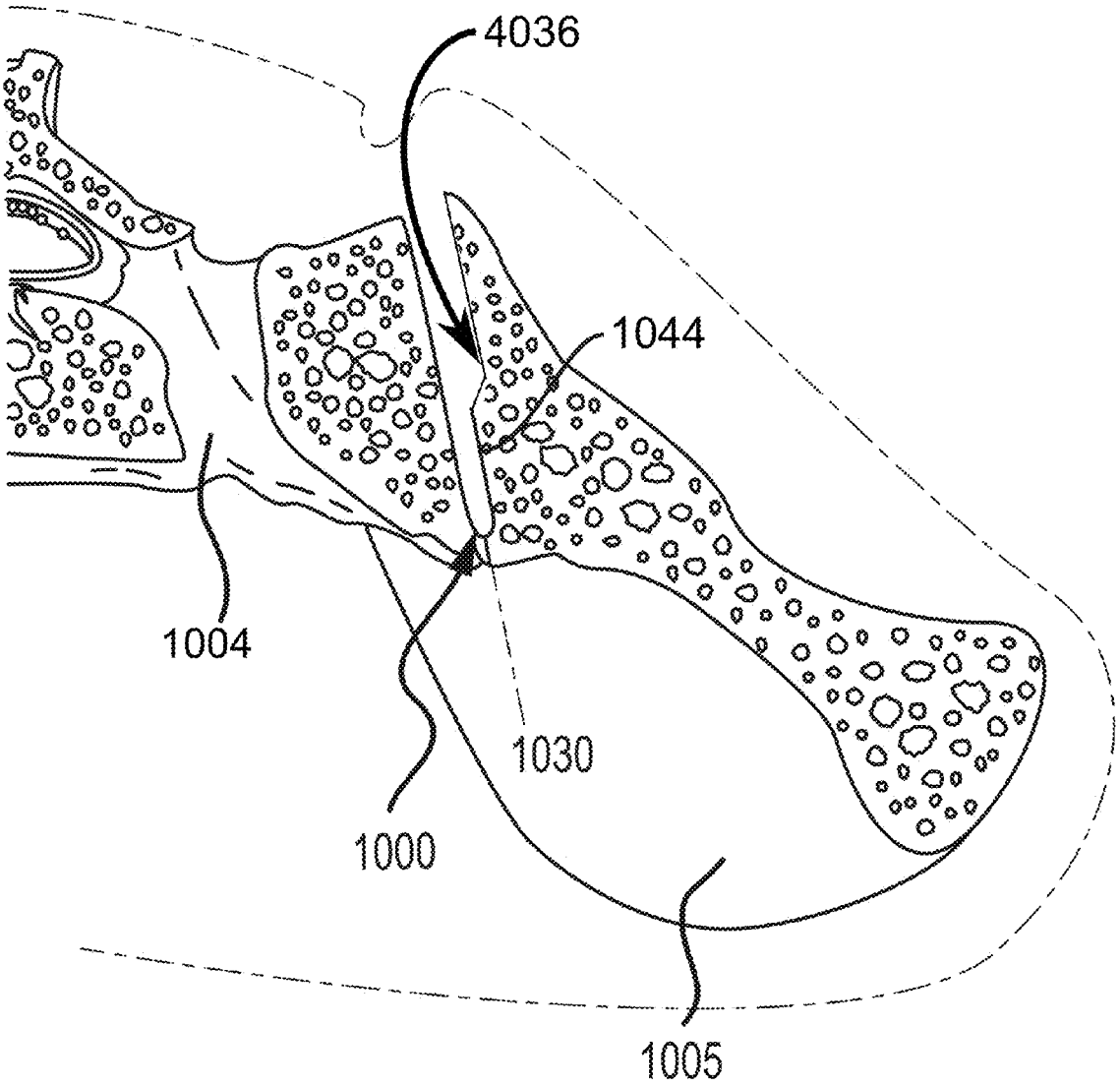

FIG. 53D

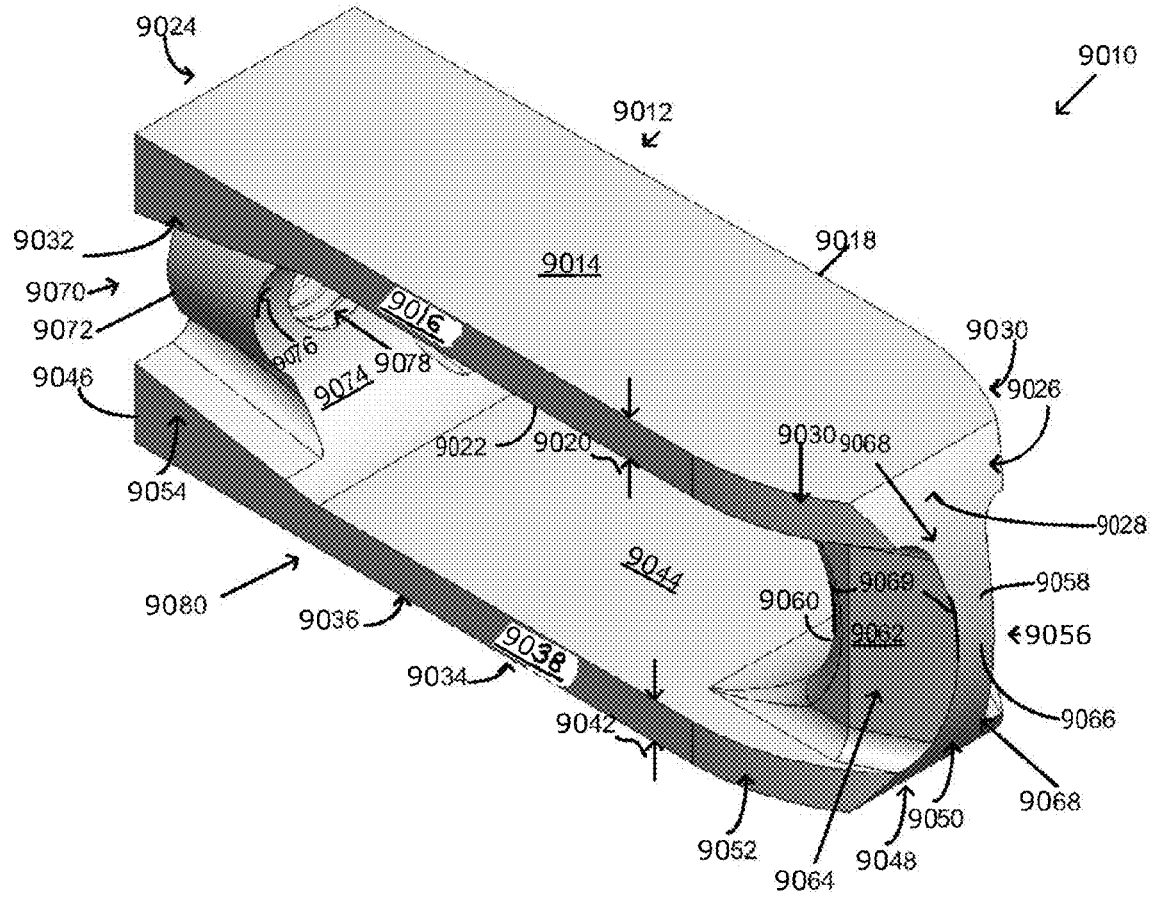
9024
9010
9012
9032
9018
9014
9070
9016
9072
9030
9076
9078
9074
9026
9046
9030
9068
9022
9020
9028
9054
9044
9080
9060
9058
9036
9062
9056
9038
9034
9066
9042
9068
9050
9052
9048
9064

FIG. 54A

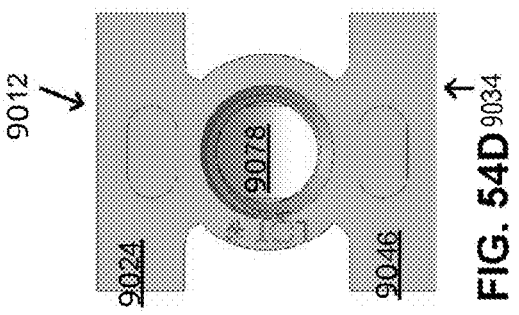

FIG. 54D

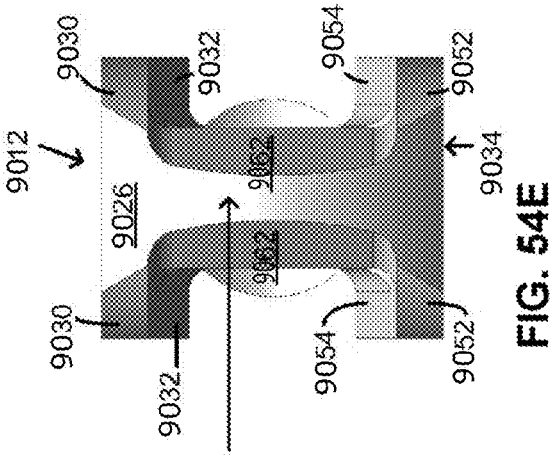

FIG. 54E

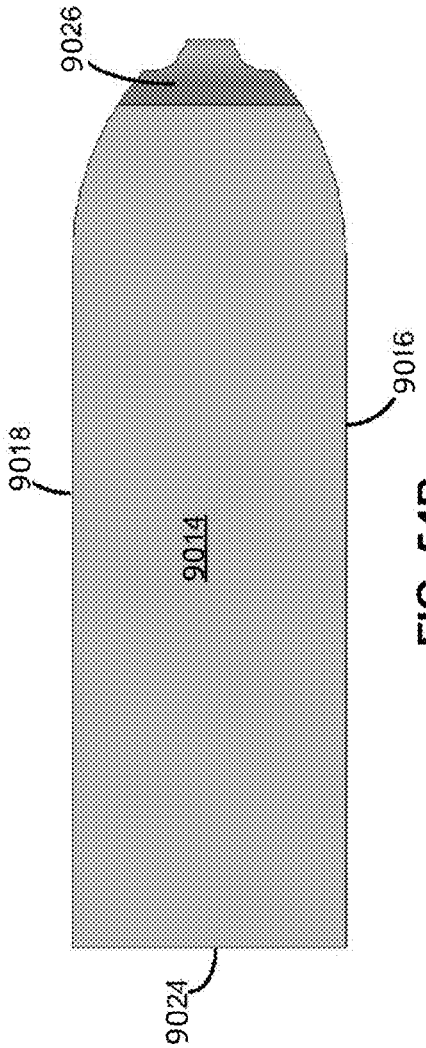

FIG. 54B

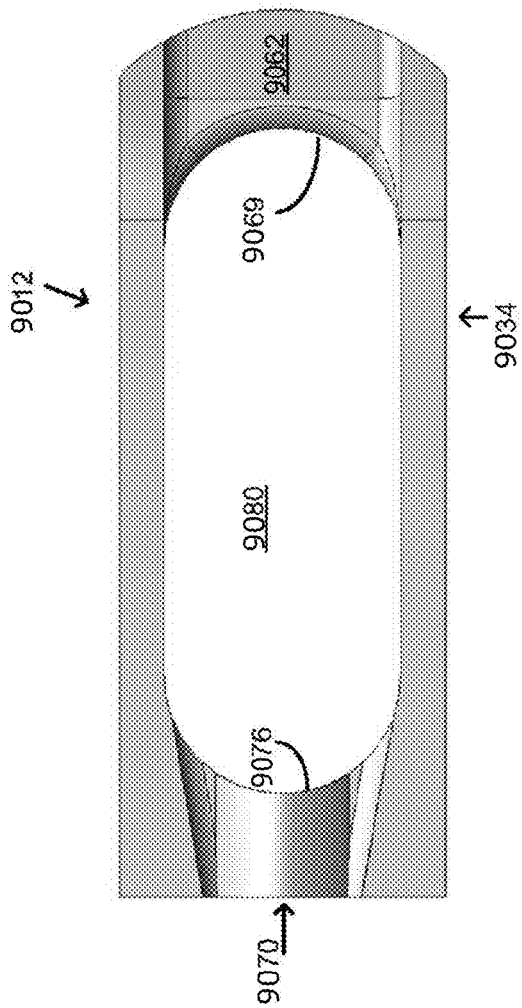

FIG. 54C

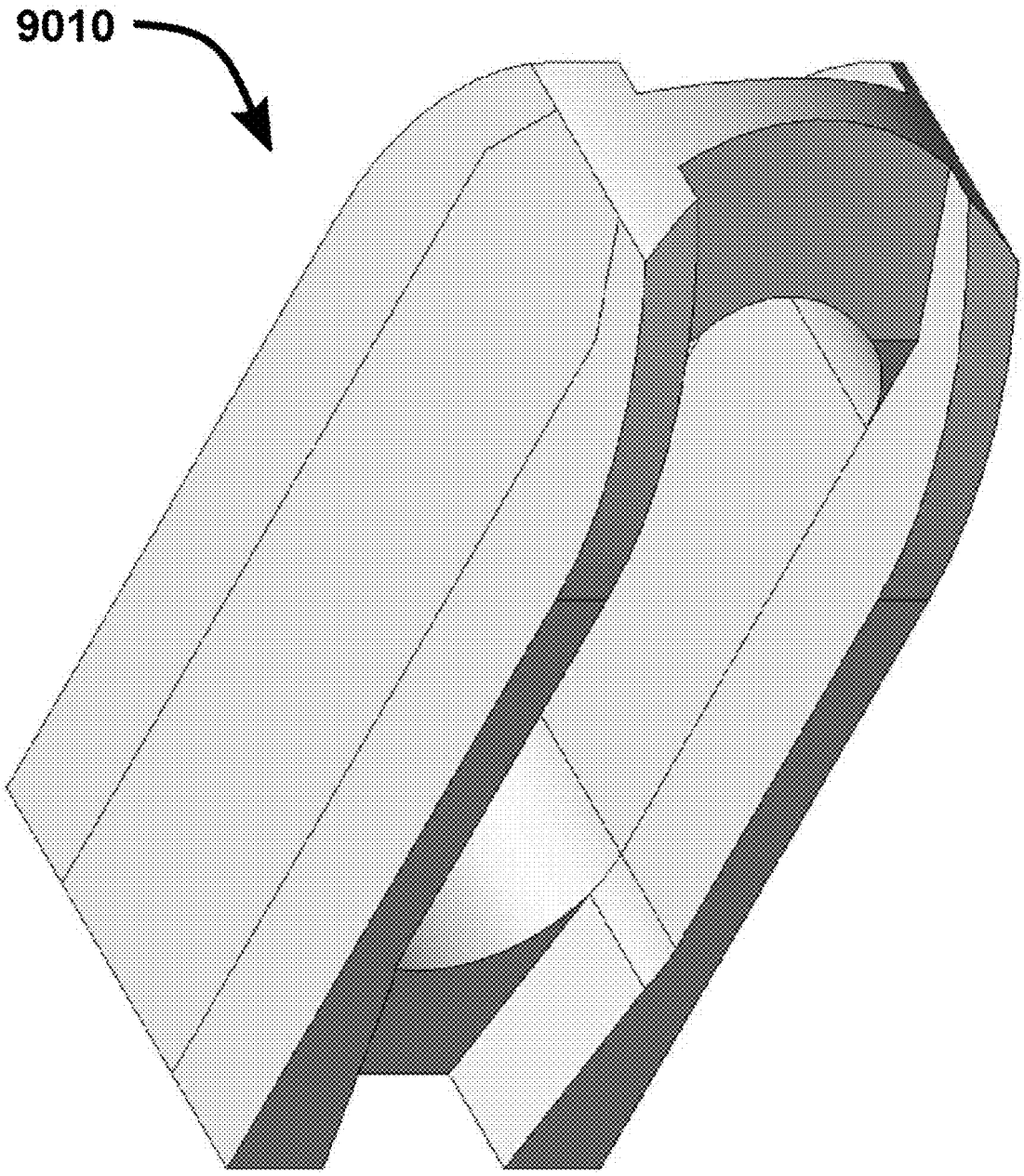

FIG. 55A

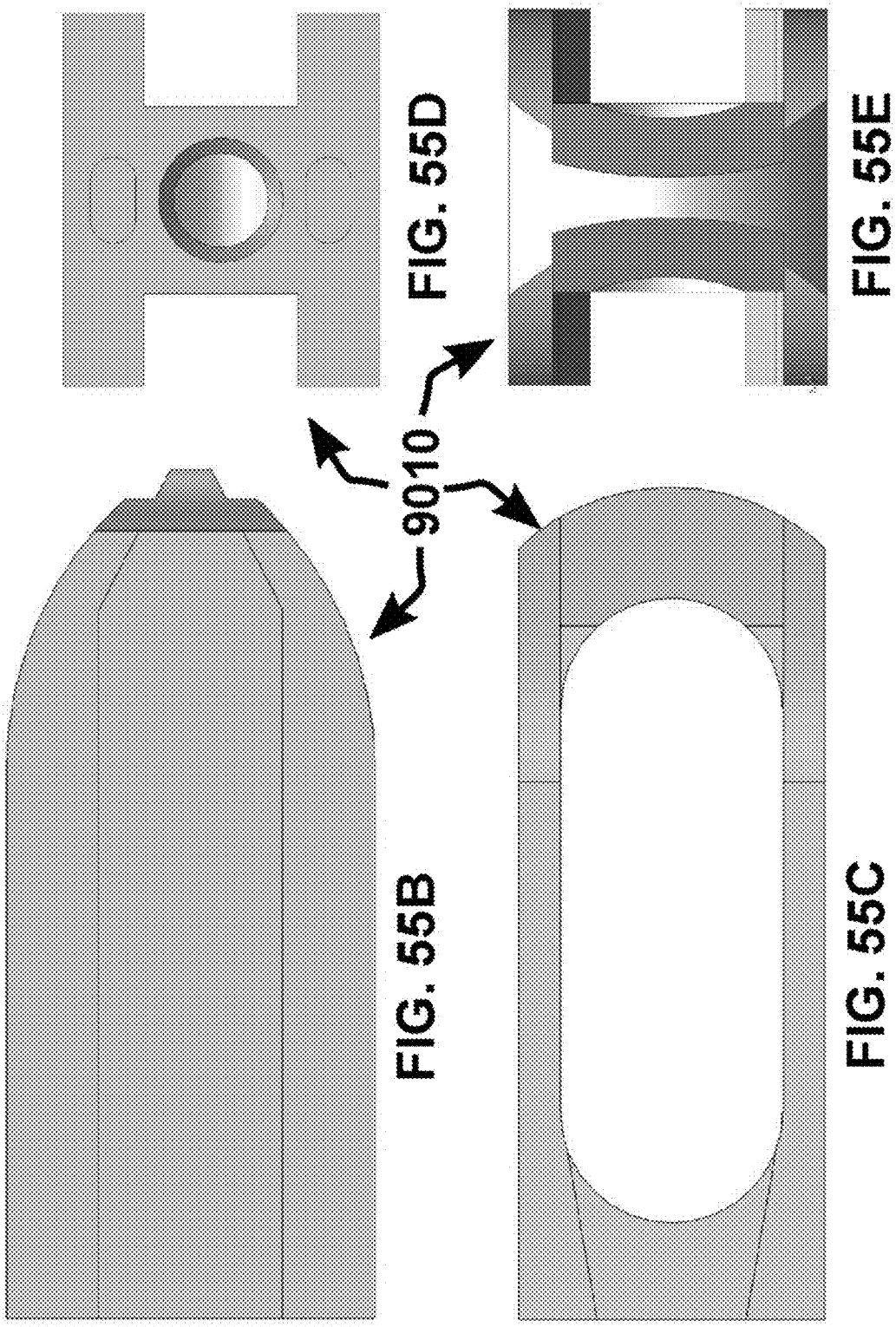

FIG. 55B

FIG. 55C

FIG. 55D

FIG. 55E

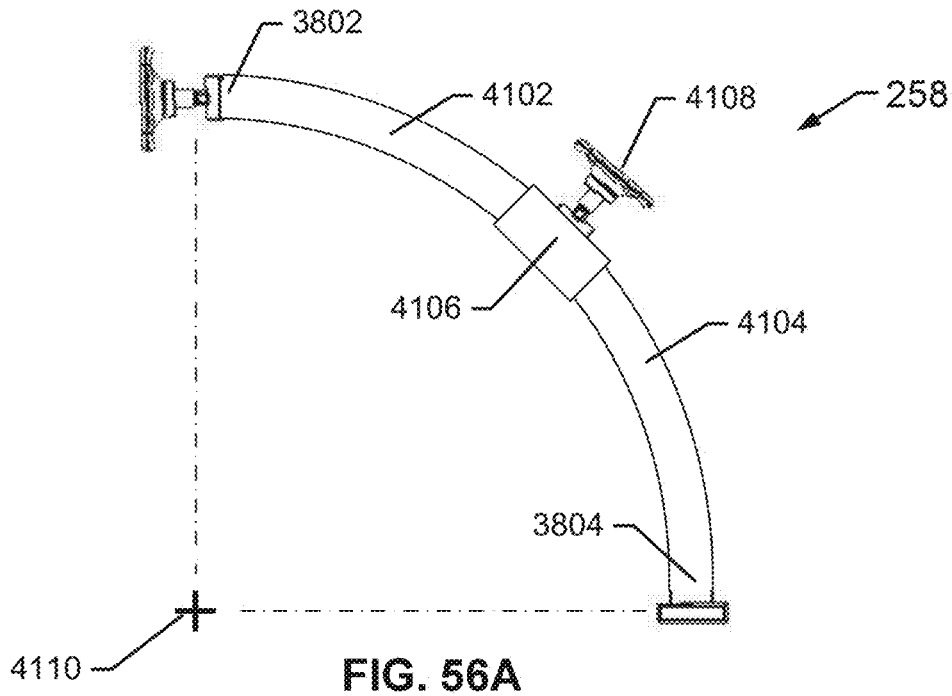

FIG. 56A

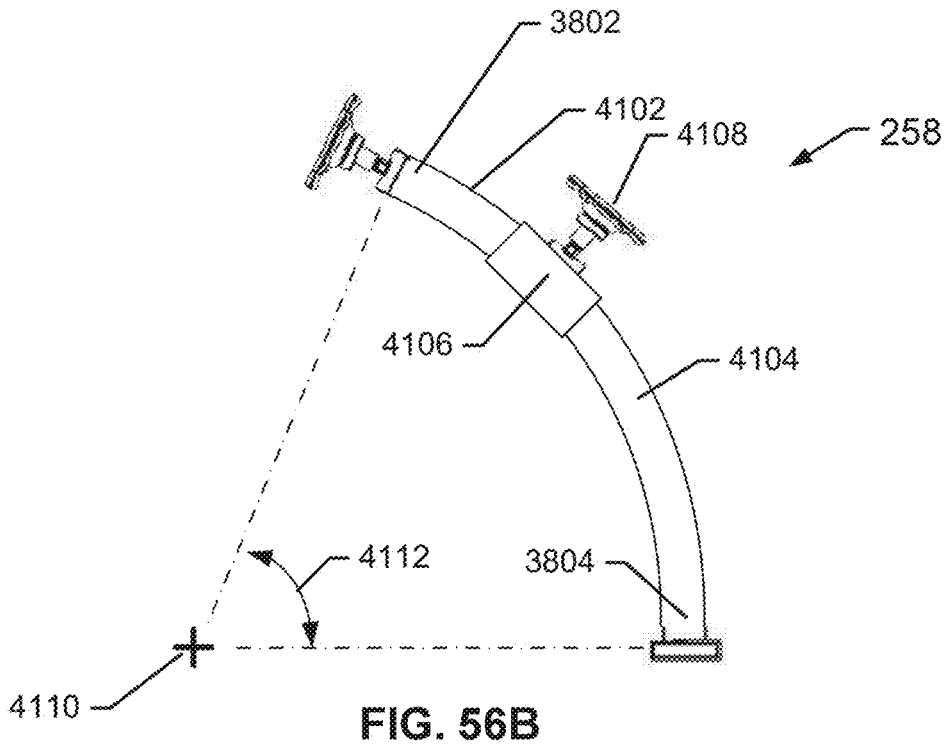

FIG. 56B

SYSTEMS FOR AND METHODS OF PREPARING A SACROILIAC JOINT FOR FUSION

CROSS REFERENCE TO RELATED APPLICATIONS

[0001] The present application is a continuation of U.S. patent application Ser. No. 14/514,221 filed Oct. 14, 2014 ("the '221 application").

[0002] The '221 application claims priority under 35 U.S. C. § 119 to U.S. Provisional Patent Application 61/891,330, which was filed Oct. 15, 2013, entitled "SYSTEMS FOR AND METHODS OF FUSING A SACROILIAC JOINT," and is hereby incorporated by reference in its entirety into the present application.

[0003] The '221 application also claims priority under 35 U.S.C. § 119 to U.S. Provisional Patent Application 61/891,345, which was filed Oct. 15, 2013, entitled "SYSTEMS FOR AND METHODS OF FUSING A SACROILIAC JOINT," and is hereby incorporated by reference in its entirety into the present application.

[0004] The '221 application also claims priority under 35 U.S.C. § 119 to U.S. Provisional Patent Application 61/912,494, which was filed Dec. 5, 2013, entitled "SYSTEMS FOR AND METHODS OF FUSING A SACROILIAC JOINT," and is hereby incorporated by reference in its entirety into the present application.

[0005] The '221 application also claims priority under 35 U.S.C. § 119 to U.S. Provisional Patent Application 61/914,409, which was filed Dec. 11, 2013, entitled "SYSTEMS FOR AND METHODS OF FUSING A SACROILIAC JOINT," and is hereby incorporated by reference in its entirety into the present application.

[0006] The '221 application also claims priority under 35 U.S.C. § 119 to U.S. Provisional Patent Application 61/954,594, which was filed Mar. 17, 2014, entitled "SYSTEMS AND METHODS FOR FUSING A SACROILIAC JOINT AND ANCHORING AN ORTHOPEDIC APPLIANCE," and is hereby incorporated by reference in its entirety into the present application.

[0007] The '221 application is also a continuation-in-part ("CIP") application of, and claims priority to, U.S. patent application Ser. No. 14/447,612 ("the '612 application"), which was filed Jul. 31, 2014, entitled "SYSTEMS FOR AND METHODS OF FUSING A SACROILIAC JOINT." The '612 application claims priority under 35 U.S.C. § 119 to: 1) U.S. Provisional Patent Application 61/979,857, which was filed Apr. 15, 2014, entitled "SACROILIAC JOINT IMPLANT", 2) U.S. provisional application 61/955,126, which was filed Mar. 18, 2014, entitled "SACROILIAC JOINT IMPLANT", 3) U.S. Provisional Patent Application 61/914,409, which was filed Dec. 11, 2013, entitled "SYSTEMS FOR AND METHODS OF FUSING A SACROILIAC JOINT", and 4) U.S. Provisional Patent Application 61/860,185, which was filed Jul. 30, 2013, entitled "SYSTEMS FOR AND METHODS OF FUSING A SACROILIAC JOINT". The '612 application and all Provisional Patent Applications in which it claims priority to are hereby incorporated by reference in their entireties into the present application.

TECHNICAL FIELD

[0008] Aspects of the present disclosure relate to medical apparatus and methods. More specifically, the present disclosure relates to devices and methods for preparing a sacroiliac joint for fusion.

BACKGROUND

[0009] The sacroiliac joint is the joint between the sacrum and the ilium of the pelvis, which are joined by ligaments. In humans, the sacrum supports the spine and is supported in turn by an ilium on each side. The sacroiliac joint is a synovial joint with articular cartilage and irregular elevations and depressions that produce interlocking of the two bones.

[0010] Pain associated with the sacroiliac joint can be caused by traumatic fracture dislocation of the pelvis, degenerative arthritis, sacroiliitis an inflammation or degenerative condition of the sacroiliac joint, osteitis condensans ilii, or other degenerative conditions of the sacroiliac joint. Currently, sacroiliac joint fusion is most commonly advocated as a surgical treatment for these conditions. Fusion of the sacroiliac joint can be accomplished by several different conventional methods encompassing an anterior approach, a posterior approach, and a lateral approach with or without percutaneous screw or other type implant fixation. However, while each of these methods has been utilized for fixation and fusion of the sacroiliac joint over the past several decades, substantial problems with respect to the fixation and fusion of the sacroiliac joint remain unresolved.

[0011] A significant problem with certain conventional methods for fixation and fusion of the sacroiliac joint including the anterior approach, posterior approach, or lateral approach may be that the surgeon has to make a substantial incision in the skin and tissues for direct access to the sacroiliac joint involved. These invasive approaches allow the sacroiliac joint to be seen and touched directly by the surgeon. Often referred to as an "open surgery", these procedures have the attendant disadvantages of requiring general anesthesia and can involve increased operative time, hospitalization, pain, and recovery time due to the extensive soft tissue damage resulting from the open surgery.

[0012] A danger to open surgery using the anterior approach can be damage to the L5 nerve root, which lies approximately two centimeters medial to the sacroiliac joint or damage to the major blood vessels. Additionally and as seen in FIG. **1**, which depicts a conventional fusion procedure (immobilization of the articular surfaces of the sacroiliac joint in relation to one another) on a sacroiliac joint **1**, one or more screws or implants **2** are implanted transversely across the articular surfaces **3** and through the sacrum **4** and the ilium bones **5**. That is, the joint **1** is immobilized by placement of a fusion device **2** transverse to or across a plane defined by articular surfaces **3** of the sacroiliac joint space.

[0013] Use of trans-sacroiliac and S1 pedicle-iliac bone implants can also involve the risk of damage to the lumbosacral neurovascular elements. Damage to the lumbosacral neurovascular elements as well as delayed union or non-union of the sacroiliac joint by use of these procedures may require revision surgery to remove all or a portion of the implants or repeat surgery as to these complications.

[0014] Another significant problem with conventional procedures utilizing minimally invasive small opening procedures can be that the procedures are technically difficult,

requiring biplanar fluoroscopy of the articular surfaces of the sacroiliac joint and extensive surgical training and experience. Despite the level of surgical training and experience, there is a substantial incidence of damage to the lumbosacral neurovascular elements. Additionally, sacral anomalies can further lead to mal-placement of implants leading to damage of surrounding structures. Additionally, these procedures are often performed without fusion of the sacroiliac joint, which does not remove the degenerative joint surface and thereby does not address the degenerative condition of the sacroiliac joint, which may lead to continued or recurrent sacroiliac joint pain.

[0015] Another significant problem with conventional procedures can be the utilization of multiple trans-sacroiliac elongate implants, which do not include a threaded surface. This approach requires the creation of trans-sacroiliac bores in the pelvis and nearby sacral foramen, which can be of relatively large dimension and which are subsequently broached with instruments, which can result in bone being impacted into the pelvis and neuroforamen.

[0016] The creation of the trans-sacroiliac bores and subsequent broaching of the bores requires a guide pin, which may be inadvertently advanced into the pelvis or sacral foramen, resulting in damage to other structures. Additionally, producing the trans-sacroiliac bores, broaching, or placement of the elongate implants may result in damage to the lumbosacral neurovascular elements, as above discussed. Additionally, there may be no actual fusion of the articular portion of the sacroiliac joint, which may result in continued or recurrent pain requiring additional surgery.

[0017] Another substantial problem with conventional procedures can be that placement of posterior extra-articular distracting fusion implants and bone grafts may be inadequate with respect to removal of the articular surface or preparation of cortical bone, the implant structure and fixation of the sacroiliac joint. The conventional procedures may not remove sufficient amounts of the articular surfaces or cortical surfaces of the sacroiliac joint to relieve pain in the sacroiliac joint. The conventional implant structures may have insufficient or avoid engagement with the articular surfaces or cortical bone of the sacroiliac joint for adequate fixation or fusion. The failure to sufficiently stabilize and fuse the sacroiliac joint with the conventional implant structures and methods may result in a failure to relieve the condition of sacroiliac joint being treated. Additionally, conventional methods of driving apart a sacrum and ilium may lead to mal-alignment of the sacroiliac joint and increased pain.

[0018] Improvements to sacroiliac joint fusion involve systems and methods for non-transverse delivery of an implant into the sacroiliac joint are described in U.S. patent applications: Ser. No. 12/998,712, filed May 23, 2011 entitled SACROILIAC JOINT FIXATION FUSION SYSTEM; Ser. No. 13/236,411, filed Sep. 19, 2011 entitled SYSTEMS FOR AND METHODS OF FUSING A SACROILIAC JOINT; and Ser. No. 13/475,695, filed May 18, 2012, entitled SYSTEMS FOR AND METHODS OF FUSING A SACROILIAC JOINT; and Ser. No. 13/945,053, filed Jul. 18, 2013, entitled SYSTEMS FOR AND METHODS OF FUSING A SACROILIAC JOINT; and Ser. No. 13/946,790, filed July 19, 2013, entitled SYSTEMS FOR AND METHODS OF FUSING A SACROILIAC JOINT; and Ser. No. 14/216,975, filed Mar. 17, 2014, entitled SYSTEMS AND METHODS FOR FUSING A SACROILIAC JOINT AND ANCHORING AN ORTHOPEDIC APPLIANCE; and Ser. No. 14/447,612, filed Jul. 31, 2014, entitled SYSTEMS FOR AND METHODS OF FUSING A SACROILIAC JOINT. All of application Ser. Nos. 12/998,712, 13/236,411, 13/475,695, 13/945,053, 13/946,790, 14/216,975, and 14/447,612 are herein incorporated by reference in their entirety. In certain instances, it may be desirable to prepare the surfaces of the sacroiliac joint prior to implantation of the fusion device, e.g., the intra-articular or extra-articular surfaces. While surgical preparation tools may exist for procedures in other areas of the body, tools for preparing the sacroiliac joint for fusion are lacking. Thus, the systems and methods discussed herein address the challenges in preparing the sacroiliac joint for fixation and fusion.

SUMMARY

[0019] One implementation of the present disclosure may take the form of a surgical preparation tool for preparing a sacroiliac joint having a sacrum and an ilium for a surgical procedure. In one embodiment, the tool may include a trial tool assembly and a cutting tool.

[0020] The trial tool assembly may include an implant trial at a distal end of the trial tool assembly and a trial shaft coupled to and extending proximally from the implant trial. The implant trial may include a body comprising a first length extending along a longitudinal axis from a proximal to a distal end, a top surface, a bottom surface generally opposite the top surface, a first side surface, and a second side surface generally opposite the first side surface. The implant trial may be configured to be delivered non-transversely into the sacroiliac joint such that the first top and first bottom surfaces oppose either the sacrum or the ilium.

[0021] The cutting tool of the surgical preparation tool may be configured to releasably and slidably couple with the trial tool assembly. The cutting tool may include a first cutting element at a distal end of the cutting tool and a cutting shaft extending proximally from the cutting element. The first cutting element may include a second length extending from a proximal to a distal end. The trial tool assembly is configured to guide the cutting tool during distal-proximal translation such that as the first cutting element distally advances relative to the implant trial, at least a portion of the first cutting element extends generally over and perpendicularly outward from the first side surface of the body of the implant trial.

[0022] Another implementation of the present disclosure may take the form of a surgical preparation tool for preparing a sacroiliac joint having a sacrum and an ilium for a surgical procedure. In one embodiment, the tool may include a trial tool assembly and a drill guide assembly.

[0023] The trial tool assembly may include an implant trial at a distal end of the trial tool assembly and a trial shaft coupled to and extending proximally from the implant trial. The implant trial may include a body comprising a first length extending along a longitudinal axis from a proximal to a distal end, a first top surface, a first bottom surface generally opposite the first top surface, and a thickness defined between the first top and first bottom surfaces. The implant trial may be configured to be delivered non-transversely into the sacroiliac joint such that the first top and first bottom surfaces oppose either the sacrum or the ilium.

[0024] The drill guide assembly may be configured to releasably and slidably couple with the trial tool assembly. The drill guide assembly may include a drill guide at a distal

end of the cutting guide and a drill guide shaft extending proximally from the drill guide. The drill guide may include a first passageway that is configured to guide a drill bit during distal-proximal translation of the drill bit relative to the drill guide assembly. The trial tool assembly may be configured to guide the drill guide assembly during distal-proximal translation such that as the drill guide distally advances relative to the implant trial, the drill guide is positioned in an orientation to deliver the drill bit generally over at least a portion of the first top surface of the body of the implant trial.

[0025] Yet another implementation of the present disclosure may take the form of a method of surgically preparing a sacroiliac joint having a sacrum and an ilium for a surgical fusion procedure.

[0026] In one embodiment, the method may include approaching a sacroiliac joint space with a joint preparation tool that may include an implant trial assembly and a cutting tool. The implant trial assembly may include an implant trial at a distal end of the joint preparation tool and an implant trial shaft extending proximally from the implant trial. The implant trial may include a length extending from a proximal end to a distal end of the implant trial, a first top surface, and a first bottom surface generally opposite the first top surface. The cutting tool may be configured to releasably and slidably couple with the trial tool assembly. The cutting tool may include a cutting element at a distal end of the cutting tool and a cutting shaft extending proximally from the cutting element. The cutting element may include a second length extending from a proximal to a distal end, wherein the trial tool assembly is configured to guide the cutting tool during distal-proximal translation.

[0027] The method may also include delivering a portion of the implant trial non-transversely into the sacroiliac joint space. The implant trial may be oriented in the sacroiliac joint space such that the first top and bottom surfaces are generally coplanar with a joint plane of the sacroiliac joint space.

[0028] The method may further include causing the cutting tool to be distally driven relative to the trial tool assembly such that the cutting element makes a cut extending into the sacrum or the ilium.

[0029] Another implementation of the present disclosure may take the form of a surgical system for preparing a sacroiliac joint having a sacrum and an ilium for a surgical procedure. In one embodiment, the system may include a joint preparation tool and a first anchoring arm.

[0030] The joint preparation tool may include a rasping head at a distal end of the joint preparation tool, a shaft extending proximally from the rasping head, and a longitudinal axis extending from a proximal to a distal end of the joint preparation tool. The rasping head may include a length extending from a distal to a proximal end of the rasping head, a top surface, and a bottom surface opposite the top surface.

[0031] The first anchoring arm may include a proximal end and a distal end, where the distal end of the first anchoring arm may be configured to engage a proximal end of an anchor element, the first anchoring arm may be operably coupled to the joint preparation tool in an arrangement such that a longitudinal axis of the anchor element is generally transversely aligned with the longitudinal axis of the joint preparation tool when the distal end of the first anchoring arm is engaged with the proximal end of the anchor element, wherein the first anchoring arm is configured to deliver the anchor element across the sacroiliac joint according to the arrangement.

[0032] Another implementation of the present disclosure may take the form of a surgical preparation tool for preparing a sacroiliac joint having a sacrum and an ilium for a surgical procedure. In one embodiment, the tool may include a trial tool assembly and a cutting tool assembly.

[0033] The trial tool assembly may include an implant trial at a distal end of the trial tool assembly and a trial shaft coupled to and extending proximally from the implant trial. The implant trial may include a body comprising a first length extending along a longitudinal axis from a proximal to a distal end, a first top surface, a first bottom surface generally opposite the first top surface, and a thickness defined between the first top and first bottom surfaces. The implant trial may be configured to be delivered non-transversely into the sacroiliac joint such that the first top and first bottom surfaces oppose either the sacrum or the ilium.

[0034] The cutting tool may be configured to releasably and slidably couple with the trial tool assembly. The cutting tool may include a cutting element at a distal end of the cutting tool and a cutting shaft extending proximally from the cutting element. The cutting element may include a second length extending from a proximal to a distal end. The trial tool assembly may be configured to guide the cutting tool during distal-proximal translation such that as the cutting element distally advances relative to the implant trial, at least a portion of the cutting element extends generally over and perpendicularly outward from the first top surface of the body of the implant trial.

[0035] While multiple embodiments are disclosed, still other embodiments of the present disclosure will become apparent to those skilled in the art from the following detailed description, which shows and describes illustrative embodiments of the disclosure. As will be realized, the various embodiments of the present disclosure are capable of modifications in various aspects, all without departing from the spirit and scope of the present disclosure. Accordingly, the drawings and detailed description are to be regarded as illustrative in nature and not restrictive.

BRIEF DESCRIPTION OF THE DRAWINGS

[0036] FIG. **1** is an anterior view of the pelvic region and a conventional method and device for stabilizing the sacroiliac joint.

[0037] FIG. **2**A is an isometric view of a first embodiment of a system for fusing a sacroiliac joint.

[0038] FIG. **2**B is the same view as FIG. **2**A, except the delivery tool and implant assembly are decoupled from each other.

[0039] FIG. **3** is the same view as FIG. **2**A, except the system is exploded to better illustrate its components.

[0040] FIG. **4** is a posterior-inferior view of a sacroiliac joint with a patient body shown in broken line.

[0041] FIG. **5** is a close-up view of the implant and anchor element in the sacroiliac joint.

[0042] FIG. **6** is an isometric view of a first embodiment of a joint preparation tool.

[0043] FIG. **7** is an exploded side view of the first embodiment of the joint preparation tool.

[0044] FIG. **8** is an isometric and cross-sectional view of the first embodiment of the joint preparation tool.

[0045] FIGS. **9**A-**9**B are isometric views of a cutting element at a distal end of the tooling head.

[0046] FIG. **10** is an isometric view of the proximal edge of the cutting element.

[0047] FIG. **11** is an isometric view of a tooling head with a closed distal end and an opened proximal end.

[0048] FIG. **12** is an isometric and cross-sectional view of the tooling head of FIG. **11**.

[0049] FIG. **13** is a side view of a tooling head with a pair of cutting elements opposite each other.

[0050] FIG. **14**A is a side view of the shaft of the tooling head and possible modifications.

[0051] FIG. **14**B is a close-up side view of the distal end of the tooling head of FIG. **14**A.

[0052] FIG. **15**A is an isometric view of a tooling head with an ellipsoidal head.

[0053] FIG. **15**B is a side view of the tooling head with the ellipsoidal head.

[0054] FIG. **15**C is a close-up side view of the tooling head with the ellipsoidal head.

[0055] FIG. **15**D is another side view of the tooling head with the ellipsoidal head.

[0056] FIG. **16** is an isometric view of a tooling head with a bisected ellipsoidal head.

[0057] FIG. **17** is an isometric view of another tooling head with a bisected ellipsoidal head.

[0058] FIG. **18**A is a front view of a tooling head with a planar rasping head.

[0059] FIG. **18**B is a side view of the tooling head of FIG. **18**A.

[0060] FIG. **18**C is a side cross-sectional view of the planar rasping head.

[0061] FIG. **18**D is a close-up isometric view of the planar rasping head.

[0062] FIG. **19**A is a front view of a tooling head with a planar rasping head and a single perpendicularly extending cutting element.

[0063] FIG. **19**B is a side view of the tooling head of FIG. **19**A.

[0064] FIG. **19**C is a side cross-sectional view of the planar rasping head and the single perpendicularly extending cutting element.

[0065] FIG. **19**D is a close-up isometric view of the planar rasping head and the single perpendicularly extending cutting element.

[0066] FIG. **20**A is a front view of a tooling head with a smooth planar head and a single perpendicularly extending cutting element.

[0067] FIG. **20**B is a side view of the tooling head of FIG. **20**A.

[0068] FIG. **20**C is a close-up isometric view of the smooth planar head and the single perpendicularly extending cutting element.

[0069] FIG. **21**A is a front view of a tooling head with a smooth planar head and a pair of perpendicularly extending cutting elements.

[0070] FIG. **21**B is a side view of the tooling head of FIG. **21**A.

[0071] FIG. **21**C is a close-up isometric view of the smooth planar head and the pair of perpendicularly extending cutting elements.

[0072] FIG. **22**A is a front view of a tooling head with a planar rasping head and a pair of perpendicularly extending cutting elements.

[0073] FIG. **22**B is a side view of the tooling head of FIG. **22**A.

[0074] FIG. **22**C is a side cross-sectional view of the tooling head of FIG. **22**A.

[0075] FIG. **22**D is a close-up isometric view of the planar rasping head and the pair of perpendicularly extending cutting elements.

[0076] FIG. **23**A is a front view of a tooling head with a box osteotome head.

[0077] FIG. **23**B is a side view of the tooling head of FIG. **23**A.

[0078] FIG. **23**C is a cross-sectional view of the box osteotome head.

[0079] FIG. **23**D is a bottom close-up isometric view of the box osteotome head.

[0080] FIG. **24**A is a side view of a surgical preparation tool attached to an anchor arm assembly.

[0081] FIG. **24**B is a side view of the surgical preparation tool and the anchor arm assembly of FIG. **24**A in a pre-assembled state.

[0082] FIG. **25** is a side view of another surgical preparation tool attached to an anchor arm assembly.

[0083] FIG. **26**A is an isometric view of a joint preparation tool with a translating and rotation inhibiting distal handle assembly.

[0084] FIG. **26**B is a cross-sectional view of a coupler member and a shaft of a tooling head of the tool of FIG. **26**A.

[0085] FIG. **26**C is a front isometric view of the joint preparation tool of FIG. **26**A with a socket assembly in an uncoupled state.

[0086] FIG. **26**D is a side view of the joint preparation tool of FIG. **26**A with the distal handle assembly in a proximal position.

[0087] FIG. **26**E is a close-up side view of a cutting element at a distal end of the tooling head of the joint preparation tool of FIG. **26**A.

[0088] FIG. **26**F is a cross-sectional view of the cutting element of FIG. **26**E.

[0089] FIG. **26**G is a cross-sectional view of another embodiment of a cutting element.

[0090] FIG. **27** is an isometric view of a bottom side of a surgical preparation tool assembly including a trial tool assembly and a cutting tool.

[0091] FIG. **28** is an isometric view of a top side of the surgical preparation tool assembly of FIG. **27**.

[0092] FIG. **29** is an isometric view of the cutting tool of the surgical preparation tool assembly of FIG. **27**.

[0093] FIG. **30** is a close-up isometric view of a distal end of the cutting tool.

[0094] FIG. **31** is an isometric back view of the surgical preparation tool assembly with a cross-section at the proximal end of the implant trial.

[0095] FIG. **32** is a front view of the trial tool assembly.

[0096] FIG. **33** is a back view of the trial tool assembly.

[0097] FIG. **34** is a side view of the trial tool assembly.

[0098] FIG. **35** is a cross-sectional isometric view of the handle assembly and the proximal end of the shaft of the trial tool.

[0099] FIG. **36**A is a side view of another embodiment of a cutting tool.

[0100] FIG. **36**B is a close-up isometric view of the cutting tool of FIG. **35**A.

[0101] FIG. **36**C is a side view of a cutting element formed of a chain of interconnected teeth.

[0102] FIG. **36**D is a top view of an implant trial configured to guide the cutting element of FIG. **36**C.

[0103] FIG. **36**E is an isometric view of an arcuate implant trial configured to guide a cutting element formed of a chain of interconnected teeth.

[0104] FIG. **37** is an isometric view of a joint preparation tool assembly with coaxially aligned shafts of a cutting tool and a trial implant tool assembly.

[0105] FIG. **38** is an isometric view of the joint preparation tool assembly of FIG. **37** with the cutting tool and the trial implant tool assembly in an uncoupled state.

[0106] FIG. **39** is an isometric view of a joint preparation tool assembly with coaxially aligned shafts of a cutting tool, a trial implant tool assembly, and a trial impact rod assembly.

[0107] FIGS. **40**A-**40**C are isometric views of the trial impact rod assembly and the trial tool assembly coupling together.

[0108] FIG. **41** is an isometric view of a handle assembly coupling with the trial impact rod assembly and the trial tool assembly.

[0109] FIG. **42**A is an isometric view of the cutting tool and the trial tool assembly coupling together.

[0110] FIG. **42**B is an isometric view of the handle assembly coupling with the cutting tool and the trial tool assembly.

[0111] FIG. **43**A-**43**D are front view of implant trials with differing configurations of cutting tools.

[0112] FIG. **43**E is an isometric view of an implant trial and an anchor member in a recessed condition.

[0113] FIG. **43**F is an isometric view of an implant trial and an anchor member in a deployed condition.

[0114] FIG. **44** is an isometric view of a joint preparation tool assembly with a trial tool assembly and a drill guide.

[0115] FIG. **45** is an isometric view of the joint preparation tool assembly of FIG. **44** with the various components in an uncoupled state.

[0116] FIG. **46** is an isometric view of the joint preparation tool assembly of FIG. **44** with a drill bit positioned within a collar of the drill guide.

[0117] FIG. **47**A-**47**B are differing configurations of the collar on the drill guide.

[0118] FIG. **48**A is a right lateral view of a hip region of a patient lying in a prone position, wherein the soft tissue surrounding the skeletal structure of the patient is shown in dashed lines.

[0119] FIG. **48**B is an enlarged view of the hip region of FIG. **48**A.

[0120] FIG. **48**C is generally the same view as FIG. **48**B, except that the ilium is removed to show the sacroiliac joint space boundary defined along the sacrum and an implant positioned for implantation within the joint space.

[0121] FIGS. **49**A-**49**D are each a step in the methodology and illustrated as the same transverse cross section taken along a plane extending generally medial-lateral and generally anterior posterior.

[0122] FIG. **49**E is a posterior view of the pelvic region showing fixed placement of the cannula in relation to the sacroiliac joint having inserted within a cannula alignment jig.

[0123] FIG. **49**F is a perspective view of the cannula jig insert shown in FIG. **49**E having cross hairs.

[0124] FIG. **49**G is a perspective view of the cannula shown in FIG. **49**F having a cannula alignment jig inserted within having alignable cross hairs.

[0125] FIG. **49**H is a posterior view of the pelvic region showing fixed placement of the cannula in relation to the sacroiliac joint having within a first drill jig.

[0126] FIG. **49**I is a perspective view of the cannula of FIG. **49**H having within the first drill jig.

[0127] FIG. **49**J is a side view of a cannula, in one embodiment.

[0128] FIG. **49**K is a top view of the cannula of FIG. **49**J.

[0129] FIG. **49**L is a front view of the cannula of FIG. **49**J.

[0130] FIG. **49**M is a posterior lateral view of the pelvic region showing the cannula of FIG. **49**J positioned in relation to the sacroiliac joint.

[0131] FIG. **49**N is another posterior lateral view of the pelvic region showing the cannula of FIG. **49**J positioned in relation to the sacroiliac joint.

[0132] FIG. **49**O is a posterior view of the pelvic region showing the cannula of FIG. **49**J positioned in relation to the sacroiliac joint.

[0133] FIG. **49**P is a posterior inferior view of the pelvic region showing the cannula of FIG. **49**J positioned in relation to the sacroiliac joint.

[0134] FIG. **49**Q is a posterior view of the pelvic region showing the cannula of FIG. **49**J positioned in relation to the sacroiliac joint.

[0135] FIG. **49**R is another posterior view of the pelvic region showing the cannula of FIG. **49**J positioned in relation to the sacroiliac joint.

[0136] FIGS. **50**A-**50**B are steps in the methodology of preparing the sacroiliac joint for fusion utilizing a tooling head, e g., of FIGS. **9**-**10**, and illustrated in the transverse cross section of FIGS. **49**A-**49**D.

[0137] FIGS. **50**C-**50**F are additional steps in the methodology that continue from those described in reference to FIGS. **50**A-**50**B, except that the view is of the sacroiliac joint from the perspective in FIG. **48**C.

[0138] FIGS. **51**A-**51**E are additional steps in the methodology of preparing the sacroiliac joint for fusion including utilizing a tooling head, e.g., of FIGS. **9**-**10**, and illustrated in the transverse cross section of FIGS. **50**A-**50**B.

[0139] FIGS. **52**A-**52**B are steps in the methodology of preparing a sacroiliac joint for fusion utilizing a tooling head with dual cutting elements, e.g., as seen in FIG. **13**, and shown in the transverse cross section of FIGS. **49**A-**49**D.

[0140] FIGS. **53**A-**53**D are steps in the methodology of preparing a sacroiliac joint for fusion utilizing the joint preparation tool assemblies described in FIGS. **27**-**47**.

[0141] FIG. **54**A-**54**E depict, respectively, an isometric view, top view, side view, back view, and front view of a joint implant, in one embodiment. The side view being the same as an opposite side view, and the top view being the same as the bottom view.

[0142] FIG. **55**A-**55**E depict, respectively, an isometric view, top view, side view, back view, and front view of a joint implant, in one embodiment. The side view being the same as an opposite side view, and the top view being the same as the bottom view.

[0143] FIG. **56**A is a side view of a telescoping anchor arm assembly.

[0144] FIG. **56**B is a side view of the telescoping anchor arm assembly of FIG. **56**A, except with a portion of the first section nested within the central lumen of the second section, resulting in a shorter elongate shape.

DETAILED DESCRIPTION

[0145] Implementations of the present disclosure involve a system for preparing a sacroiliac joint for fusion. In particular, the system may include a preparation tool for removing articular cartilage from the sacroiliac joint space, abrading of the articular surfaces to enhance boney fusion, and removal of portions of the cortical, subchondral or cancellous bone for implantation of a fusion device. The preparation tool may include an anchoring arm that is configured to direct an anchoring element for transverse delivery through the sacroiliac joint space. The anchor may be delivered into the joint space before, during, or after the joint space is prepared for implant delivery. Alternatively, an implant may not be delivered into the joint and instead, e.g., bone paste or slurry may be introduced into the prepared sacroiliac joint before or after anchor placement. And, the anchor may be delivered cranial, caudal, or in-line with the eventual placement of the implant. The preparation tool is configured to quickly, accurately and reliably prepare the joint space for insertion of an implant.

I. System for Fusion of the Sacroiliac Joint

[0146] To begin a detailed discussion of a system **10** for delivering an implant **12** into the sacroiliac joint, reference is made to FIGS. **2**A-**3**. FIG. **2**A is an isometric view of the system **10**. FIG. **2**B is the same view as FIG. **2**A, except an implant assembly **14** of the system **10** is separated from a delivery tool **16** of the system **10**. FIG. **3** is the same view as FIG. **2**A, except the system **10** is shown exploded to better illustrate the components of the system **10**.

[0147] As can be understood from FIGS. **2**A and **2**B, the system **10** includes a delivery tool **16** and an implant assembly **14** for implanting at the sacroiliac joint via the delivery tool **16**, the implant assembly **14** being for fusing the sacroiliac joint. As indicated in FIG. **3**, the implant assembly **14** includes an implant **12** and an anchor element **18** (e.g., a bone screw or other elongated body). As discussed below in greater detail, during the implantation of the implant assembly **14** at the sacroiliac joint, the implant **12** and anchor element **18** are supported by a distal end **20** of the delivery tool **16**, as illustrated in FIG. **2**A. The delivery tool **16** is used to deliver the implant **12** into the sacroiliac joint space. The delivery tool **16** is then used to cause the anchor element **18** to extend through the ilium, sacrum and implant **12** generally transverse to the sacroiliac joint and implant **12**. The delivery tool **16** is then decoupled from the implanted implant assembly **14**, as can be understood from FIG. **2**B. As illustrated in FIG. **3**, the delivery tool **16** further includes a proximal end **22** opposite the distal end **20**, an arm assembly **24**, a handle **26**, an implant retainer **28**, a sleeve **30** and a trocar or guidewire **32**. While in the embodiment of FIGS. **2**A-**3**, the delivery tool **16** is fixed and non-adjustable and configured to deliver the anchoring element **18** in a single orientation relative to the implant **12**, the delivery tool **16** may be adjustable and configured to deliver the anchoring element **18** within a range of orientations relative to the implant **12** that will orient the anchoring element **18** either within a bore of the implant **12**, or adjacent implant **12** as described in U.S. patent application Ser. No. 14/447,612, filed Jul. 31, 2014, entitled SYSTEMS FOR AND METHODS OF FUSING A SACROILIAC JOINT, which is hereby incorporated by reference in its entirety.

[0148] In particular embodiments, first and second articular faces of the implant **12** may be selected to match the contour of the joint space of the sacroiliac joint within which the implant **12** is to be inserted. For example, the sacral, medial or first articular face of the implant may be configured to be generally convex to match the contour of a sacral auricular boney surface or to match the contour of an extra-articular region of a sacrum (e.g., a sacral fossa). In one aspect and referring to portions of the anatomy shown FIG. **48**C, the sacral, medial or first articular face of the implant **12** may be generally a surface negative of the articular surfaces **1016** of the extra-articular region **3007** and/or articular region **1044** of the sacrum **1004**. As another example, the lateral, iliac or second articular face of the implant **12** may be configured to be generally concave to match the contour of an iliac auricular boney surface or to match the contour of an extra-articular region of an ilium (e.g., an iliac tuberosity). In one aspect, the lateral, iliac or second articular face of the implant **12** may be generally a surface negative of the articular surfaces **1016** of the extra-articular region **3007** and/or articular region **1044** of the ilium **1005**.

[0149] Referring to FIGS. **54**A-**54**E, in one embodiment the implant **9010** includes a first planar member **9012** extending a first top length of the implant and comprising a first planar top surface **9014** that extends between a first sacral side edge **9016** and a first ilium side edge **9018** that is opposite of and substantially parallel with the first sacral side edge, the side edges being substantially perpendicular to first planar top surface, the side edges extending the first top length of the implant and disposed a first thickness **9020** from a first bottom surface **9022** that is opposite the first planar top surface, the first planar top surface also extending between a substantially perpendicular proximal end edge **9024** and a tapered distal end edge **9026**, the tapered distal edge including a sloped taper **9028** along the first thickness between the first planar top surface and the first bottom surface such that the first top length is shorter than a first bottom length that extends a length of the first bottom surface, the tapered distal edge also including an inward tapering **9030** of the side edges towards a distal end of the implant, the side edges including a taper **9032** at a proximal end of the implant such that the first thickness substantially linearly increases until the side edges meet with the proximal end edge.

[0150] The implant further includes a second planar member **9034** that is opposite the first planar member, the second planar member extending a second top length of the implant and comprising a second planar top surface **9036** that extends between a second sacral side edge **9038** and a second ilium side edge **9040** that is opposite of and substantially parallel with the second sacral side edge, the side edges being substantially perpendicular to the second planar top surface, the side edges extending the second top length of the implant and disposed a second thickness **9042** from a second bottom surface **9044** that is opposite the first planar top surface and opposed to the first bottom surface, the second planar top surface also extending between a substantially perpendicular proximal end edge **9046** and a tapered distal end edge **9048**, the tapered distal edge including a sloped taper **9050** along the second thickness between the second planar top surface and the second bottom surface such that the second top length is shorter than a second bottom length that extends a length of the second bottom

surface, the tapered distal edge also including an inward tapering **9052** of the side edges towards the distal end of the implant, the side edges including a taper **9054** at a proximal end of the implant such that the second thickness substantially linearly increases until the side edges meet with the proximal end edge.

[0151] The implant further includes a distal end member **9056** that couples the respective tapered distal end edges of the first planar member and the second planar member, the distal end member extending perpendicularly between the first planar member and the second planar member and including a distal front edge **9058**, a proximal edge **9060** opposite the distal front edge, and a pair of distal end member side surfaces **9062** between the distal front edge and the proximal edge, the proximal edge including a width that is larger than a width of the distal front edge such that the pair of distal end member side surfaces tapers or narrows **9064** towards the distal front edge, the distal front edge including a distal most point **9066** that slopes toward each of the respective first planar top surface and the second planar top surface, the sloping of the distal front edge smoothly transitioning **9068** with the sloped taper between the first planar top surface and the first bottom surface as well as the sloped taper between the second planar top surface and the second bottom surface, the distal front edge and the proximal edge both defining radial curves **9069**.

[0152] The implant further includes a proximal end member **9070** that couples the respective proximal end edges of the first planar member and the second planar member, the proximal end member including a proximal side **9072** that is in-line and parallel with the first and the second proximal end edge and a distal side **9074** that is opposite the proximal side, the distal side including a curve **9076** that is a mirror of the radial curve of the proximal edge of the distal end member, the proximal end member including an axial bore **9078** through the proximal end member, the proximal end member being slightly larger and including a similar shape to the axial bore, the axial bore being threaded and configured to mate with an implant insertion tool, wherein a bone graft or anchoring window **9080** is defined between the proximal edge of the distal end member and the distal side of the proximal end member, the window including a stadium shape that extends perpendicularly through a longitudinal axis of the implant, the window being adapted to receive bone graft or an anchoring element to anchor the implant to the articular surfaces.

[0153] In certain embodiments, the distal end member side edges and the proximal edge meet at a corner where the corner is perpendicular or rounded. Similarly, other meeting points between respective edges can be straight edges (e.g., perpendicular) or rounded.

[0154] In still other embodiments, among other figures, the first sacral side edge **9016** and the first ilium side edge **9018** taper inward from the proximal end **9024** to the distal end **9026** of the implant such that the first planar top surface **9014** and the second planar top surface **9016** defines a truncated isosceles triangle with the side edges forming sides of equal length.

[0155] While reference is made to the embodiment of the implant **9010** in FIGS. **54**A-**54**E, the reference numerals are similarly applicable to the implant **9010** in FIGS. **55**A-**55**E.

[0156] A system as described in FIGS. **2**A-**3** may be used in a surgical procedure via a posterior approach, as seen in FIGS. **4**-**5**. As can be understood from FIG. **4**, which is a posterior-inferior view of a sacroiliac joint **36** with a patient **40** shown in broken line, the delivery tool **16** is positioned to deliver the implant **12** into a caudal region **34** of the sacroiliac joint **36** and the anchoring element **18** through the ilium **5** and into the bore **38** of the implant **12**. Referring to FIG. **5**, the implant **12** and anchoring element **18** have been inserted into the caudal region **34** of the sacroiliac joint **36** and the delivery tool **16** has been removed.

[0157] With further reference to the boney anatomy shown in FIG. **48**C, a system as described herein may be used in a surgical procedure via an anterior approach (e.g., such that the surgical pathway includes traversing an anterior boundary segment **3004** and/or traversing an anterior-inferior corner **3010**) and may further include positioning an implant into a sacroiliac joint such that: 1) the implant longitudinal axis a) is generally parallel to a sacroiliac joint inferior boundary segment **3002**, or b) points towards a posterior superior iliac spine, or c) point towards a posterior inferior iliac spine, or d) points toward a sacroiliac extra-articular region; or, 2) the distal end of the implant generally lies within a) a caudal region of the sacroiliac joint articular region, or b) an extra-articular portion of the sacroiliac joint, or c) a cranial portion or cephalad region of the sacroiliac joint articular region.

[0158] Additionally, a system as described herein may be used in a surgical procedure via an approach which includes a surgical pathway which transverses a sacroiliac joint inferior boundary segment **3002**, e.g., as described in U.S. patent application Ser. No. 13/945,053, filed Jul. 18, 2013, entitled SYSTEMS AND METHODS OF FUSING A SACROILIAC JOINT, which is hereby incorporated by reference in its entirety. A surgical procedure via this pathway may further include positioning an implant into a sacroiliac joint such that: 1) the implant longitudinal axis a) is transverse to a sacroiliac joint inferior boundary segment **3002**, or b) points towards a posterior superior iliac spine, or c) point towards a posterior inferior iliac spine, or d) points toward a sacroiliac extra-articular region, or e) points towards a sacroiliac joint anterior boundary segment **3004**, or f) points towards either superior boundary segment corner **3014** or **3012** or somewhere in-between; or, 2) the distal end of the implant generally lies within a) a caudal region of the sacroiliac joint articular region, or b) an extra-articular portion of the sacroiliac joint, or c) a cranial portion or cephalad region of the sacroiliac joint articular region.

[0159] Furthermore, in an aspect, an implant **12** may be inserted along a generally arcuate path. Accordingly, a surgical preparation technique and tools may be utilized while operating in an arcuate path. The implant arcuate path may follow and generally match the surgical preparation arcuate path and the path arc may include a radius of between approximately 3 cm to 6 cm. The portion of the path having an arcuate path including a radius of between approximately 3 cm to 6 cm may reside substantially in the plane of the sacroiliac joint or in a plane in close proximity and generally parallel thereto. Furthermore, the arcuate path may generally or substantially reside in sacroiliac joint articular region **1044**. Additionally, an implant may be selected for use during the procedure which substantially matches the radius or curvature of the arcuate or curved insertion path or surgical preparation path.

[0160] According to a particular aspect, after drilling or otherwise producing an opening through an ilium (or sacrum) leading toward or into a sacroiliac joint, a sleeve

may guide (alone or along with another cannulated tool, e.g., a needle) a bone paste, bone marrow aspirate, stem cells, allograft or any biocompatible material or substance into the sacroiliac joint space via a path with a trajectory which may be generally transverse to the plane of the sacroiliac joint. The sleeve may be caused to form a seal with a bone defining the sacroiliac joint, e.g. the ilium. The seal may be created by impacting a proximal end of sleeve which may, for example, cause the sleeve to slightly penetrate the cortex of the outer table of the ilium. Alternatively, a cannulated tool such as a large gauge needle or tube may either be interference fit within a hole in the ilium or the needle or tube may have a threaded distal end which may be threaded into the bore formed in the ilium. A plunger or bone tamp may be forced through a sleeve to advance the bone paste or other material into the sacroiliac joint space, adjacent/around the implant and/or into the bone graft window of the implant.

[0161] Subsequently, an anchor such as a bone screw may be advanced via the sleeve into engagement with an opening formed in the ilium and driven across the sacroiliac joint and further into the sacrum. Alternatively, a bone plug may positioned into the opening formed in the ilium in order to occlude the passageway between the outer cortex of the ilium and the implanted bone paste or other material positioned which had be positioned generally in the plane of the joint.

[0162] As such, the systems and methods described herein are directed to preparing the sacroiliac joint for surgical fusion procedures of this type and others.

II. System for Preparing the Sacroiliac Joint for Fusion

[0163] Various surgical preparation tools and assemblies will be discussed herein. These tools and assemblies may be used by themselves or in combination with each other. Additionally, features of a particular embodiment are non-limiting and may be incorporated into any or all other embodiments without departing from the teachings in this disclosure.

A. Joint Preparation Tool with Interchangeable Heads

[0164] To begin a detailed discussion of the surgical preparation tools for preparing a sacroiliac joint for a fusion, reference is made to FIG. **6**, which is an isometric view of a first embodiment of a joint preparation tool **50** with interchangeable tooling heads **52**. Each of the tooling heads **52** described herein may be used by themselves, with one or more subcomponents of tool **50**, with the completed tool **50**, or with any other tool of the systems disclosed herein or incorporated herein. As seen in the figure, the joint preparation tool **50** includes a slap hammer assembly **54** and a cutting tool assembly **56**. The slap hammer assembly **54** includes a proximal handle **58** that translates distal-proximal on a shaft **60**. The cutting tool assembly **56** includes a distal handle **62**. To better illustrate the components of the joint preparation tool **50**, reference is made to FIG. **7**, which is an exploded side view of the tool **50**. As seen in the figure, a distal end **64** of the shaft **60** of the slap hammer assembly **54** is coupled to a proximal end **66** of a shaft **68** of the tooling head **52** via a connector **70** having dual-female threaded ports **72**. The distal end **64** of the shaft **60** and the proximal end **66** of the shaft **68** have thread features **74** that correspond and engage with the dual-female threaded ports **72**. In other embodiments, the connector **70** may include dual-male threaded ends and the shafts **60**, **68** may include corresponding female threaded ports. The distal handle **62** includes a lumen **76** extending through the handle **62** that is slightly larger than an outer diameter of the shaft **68** of the tooling head **52**. The distal handle **62** may be slidably positioned over the shaft **68** of the tooling head **52** and locked in place with a pair of set screws **78**. Thus, the distal handle **62** may be positioned as far proximally such that it abuts the connector **70**, as far distally so as not to interfere with the distal end of the tooling head **52**, or at any point in between.

[0165] Reference is now made to FIG. **8**, which is an isometric and cross-sectional view of the first embodiment of the joint preparation tool **50**. As seen in the figure, the proximal handle **58** further includes a lumen **80** extending through the handle **58** that is slightly larger than an outer diameter of the shaft **60** of the slap hammer assembly **54**. The proximal handle **58** is configured to slide or translate distal-proximal on the shaft **60** between a proximal stop feature **82** and a distal stop feature **84**. In this way, a surgeon may grasp the distal handle **62** with one hand and the proximal handle **58** with the other hand. To facilitate distal driving of the tooling head **52**, the surgeon may distally slide the proximal handle until it makes contact with the distal stop feature **84**. The contact with the stop feature **84** will cause a force to be transmitted down the shaft **68** of the tooling head **52** such that head **52** will advance in the direction of the force. This type of driving of the tooling head **52** may be useful to advance a distal end **86** of the tooling head **52** into the sacroiliac joint.

[0166] Additionally, the proximal stop feature **82** may be configured such that an additional handle may be coupled to or integral with proximal stop feature **82**. The additional handle may be in-line with shaft **60** and extend proximally from the proximal stop feature **82**.

[0167] To facilitate backing-out of the tooling head **52**, the surgeon may proximally slide the proximal handle until it makes contact with the proximal stop feature **82**. This contact will cause a force to be transmitted proximally, which may aid in backing the tooling head **52** out from within the sacroiliac joint, for example.

[0168] As stated above, the first embodiment of the joint preparation tool **50** is configured to be used with a variety of interchangeable tooling heads **52**. In certain embodiments and referring to FIGS. **9A-9B**, the tooling head **52** may include a cutting element **88** at the distal end **86** of the tooling head **52**. The cutting element **88** includes an aperture **90** at a distal most end of the tooling head **52** that extends between a distal edge **92** and a proximal edge **94**. The distal edge **92** forms a boundary of the aperture **90** and, in this embodiment, the distal edge **92** is blunt. Opposite the distal edge **92** is the proximal edge **94**, which, in this embodiment, is angled, sharp, and configured for cutting during "backing-out" of the preparation tool **50** from the sacroiliac joint.

[0169] In this embodiment, the aperture **90** is rectangular and is defined by a pair of generally parallel sidewall members **102** that extend generally tangentially from the surface of the shaft **68** of the tooling head **52**. Adjacent and extending generally perpendicular between the parallel sidewall members **102** is a top wall member **104**. Opposite the top wall member **104** is an inner wall member **106** that may communicate with an opened end of a lumen **108** that extends through the shaft **68** of the tooling head **52**. Additional tooling (e.g., guidewire, suctioning device, irrigation, a (centerless/shaftless/flexible/etc.) screw conveyor, an auger, Archimedes' screw, or their various combinations) may communicate through the lumen **108** for interaction

with the portion of the patient's body in contact with the distal end **86** of the tooling head **52**.

[0170] A tooling head **52** with a cutting element **88** as described in FIGS. **9**A-**9**B may be useful, for example, during the initial preparations of the sacroiliac joint. That is, the cutting element **88** may be initially and carefully advanced into the sacroiliac joint via the slap hammer assembly **54**. Once at an appropriate depth into the caudal region of the joint, the cutting element **88** may be more aggressively backed-out by the application of force by the proximal handle **58** against the proximal stop feature **82**. In this way, the force used to cut the articular cartilage is applied in the safer, proximal direction. Applying force distally requires care because advancement of the cutting element **88** too far (i.e., outside of the sacroiliac joint) can risk damage to, for example, the ventral sacroiliac joint ligament or the neurovascular structures in proximity to the joint.

[0171] Other arrangements of the cutting element **88** are possible and contemplated by this disclosure. For example, the distal edge **92** may be sharp and configured for cutting, while the proximal edge **94** may be blunt. Additionally and as seen in FIG. **10**, which is an isometric view of the proximal edge **94** of the cutting element **88**, the side wall members **102** are parallel, but the top wall member **104** and, thus, the distal edge, **92**, the proximal edge **94**, and the aperture **90** are rounded. As seen in the figure, the proximal edge **94** is sharpened along its radial edge **96** and is configured to cut during a "backing-out" of the cutting element **88**.

[0172] Other arrangements of the top wall member **104** and side wall members **102** are possible. For example, the side wall members **102** may converge to a blade-like point. The particular arrangement of the top wall member **104** and side wall members **102** may be chosen based on the density of the boney surface to be prepared. And, as will be discussed later, the tool **50** may be used oriented perpendicular to the articular surfaces of the sacroiliac joint in order to make "keel-cuts" into the bone of either or both of the sacrum or the ilium. Such keel-cuts may match or generally match a shape of an implant to be implanted into the joint. Alternatively, the keel-cuts may be sized smaller than portions of an implant to be implanted into the joint such that a portion of the implant when implanted may extend beyond the keel-cut void and further into the prepared bone. Alternatively, a keel-cut may be created in only one bone, for example, the ilium, and may generally match the shape of an implant to be implanted while the second bone, e.g., the sacrum, may have no keel-cut or a keel-cut which is significantly undersized in comparison to the shape or size of the feature of the implant which is to be implanted into the sacrum. Thus, the shape of the top wall member **104** and the side wall members **102** may be influenced by the type and configuration of the implant that is chosen for the fusion procedure.

[0173] Referring now to FIG. **11**, which is an isometric view of another embodiment of a tooling head **52**, the head **52** may include a curette-type closed distal end **86** and an opened proximal end **98** that defines a cup-shape. The tooling head **52** may include a pair of generally parallel side wall members **102** and a rounded top wall member **104**. A proximal edge **94** bounds the opened proximal end **98** and may or may not be sharpened. As best seen in FIG. **12**, which is an isometric and cross-sectional view of the tooling head **52**, the tooling head **52** defines an inner cavity **100** that is configured to gather cartilage or other material when scooping or backing the distal end **86** of the tooling head **52** out of the sacroiliac joint. While not depicted in this embodiment, the tooling head **52** may include an opening in the vicinity of the cavity **100** that communicates with a lumen that extends through the shaft **68** of the tooling head **52**. In certain instances, it may be advantageous to use the cup-shaped tooling head **52** of FIGS. **11-12** to gather and remove biological material that was cut or abraded from the articular surfaces of the sacroiliac joint by the opened tooling head **52** of FIGS. **9-10**. In other instances, however, the closed tooling head **52** of FIGS. **11-12** may be used without previous preparation of the joint.

[0174] Referring now to FIG. **13**, which is a side view of another embodiment of the tooling head **52**, the head **52** may include two cutting elements **88** opposite each other. Each cutting element **88** may be as described with reference to FIGS. **9**A-**9**B, FIG. **10** or FIGS. **11-12**. In particular, each cutting element **88** includes parallel side wall members **102**, a top wall member **104** extending generally perpendicular between the parallel side wall members **102**, a distal edge **92**, a proximal edge **94** opposite the distal edge **92**, and an aperture **90** extending between the distal and proximal edges **92**, **94**. In this embodiment, the distal edge **92** is blunt and the proximal edge **94** is sharpened such that the tooling head **52** is configured to cut or abrade cartilage or other material in the sacroiliac joint during backing-out of the tooling head **52** from the joint. An arrangement with two cutting elements as shown in FIG. **13** may be useful, for example, to prepare the plane of the joint as well as in making parallel side-cuts or keel-cuts into the surfaces of the ilium and sacrum. To prepare the plane of the joint, each of the cutting elements **88** may be oriented such that neither projects into the sacrum or the ilium. Rather, the cutting elements **88** are oriented vertically within the articular space. On the other hand, to prepare the sacrum and/or the ilium for a subsequent delivery of an implant, the cutting elements **88** may be oriented to project into the bone of the sacrum and ilium, and for example oriented perpendicularly with the plane of the joint such that the cutting elements protrude generally perpendicularly into the sacrum and the ilium to make cuts that match a shape of a portion of an implant that will be implanted in the joint.

[0175] Referring to FIG. **14**A, which is a side view of a tooling head **52**, the shaft **68** may include a gradual taper from the proximal end **66** of the tooling head **52** to the distal end **86**. As seen in the figure, the shaft **68** extends along a straight longitudinal axis between the distal and proximal ends **86**, **66**. Other arrangements of the shaft **68**, however, are possible. For example and as seen in FIG. **14**A, the shaft **68** may include a dogleg **110** along the shaft **68**. In this example, the distal and proximal ends **86**, **66** of the shaft **68** extend along parallel axes, but a mid-portion **112** of the shaft **68** extends non-parallel to the distal and proximal ends **86**, **66**. The dogleg **110** at the mid-portion **112** of the shaft **68** defines an angle A between the proximal end **66** and the dogleg **110** and an angle B between the dogleg **110** and the distal end **86** of the shaft **68**. Also, the proximal end **66** and distal end **86** may be offset by a distance D**1**, which, in certain instances, may be within a range of about 10 mm to about 25 mm or from about 15 mm to 70 mm. In certain embodiments, angle A may be within a range of about 90 degrees to about 165 degrees or from about 120 degrees and

150 degrees, and angle B may be within a range of about 90 degrees to about 165 degrees or from about 120 degrees and 150 degrees.

[0176] Referring to FIG. **14**B, which is a close-up of the distal end **86** of the tooling head **52**, a distance D**2** is defined between the top wall member **104** and an opposite radial edge **114** of the shaft **68** of the tooling head **52**. In certain instances, distance D**2** may be within a range of about 4 mm to about 5.5 mm, from about 4.5 mm to about 6 mm, from about 5 mm to about 6.5 mm, from about 5.5 mm to about 8 mm, from about 7.5 mm to about 10 mm, from about 9 mm to about 11.5 mm and from about 11 mm to about 15 mm. A distance D**3** is defined by a length of the top wall member and in certain instances D**3** may be within a range of about 1.5 mm to about 2.5 mm, from about 2 mm to about 3.5 mm, from about 3 mm to about 4.75 mm, from about 4.25 mm to about 6 mm, from about 5 mm to about 6.75 mm, from about 5.5 mm to about 8 mm, from about 7.5 mm to about 10 mm, from about 9 mm to about 11.5 mm and from about 11 mm to about 15 mm. Angle C is defined between the shaft **68** of the tooling head **52** and the extension of the proximal edge **94** of the side wall member **102**. In certain instances, angle C may be within a range of about 15 degrees to about 35 degrees, from about 30 degrees to about 45 degrees, from about 40 degrees to about 65 degrees, from about 60 degrees to about 75 degrees, from about 70 degrees to about 100 degrees, from about 90 degrees to about 135 degrees, from about 120 degrees to about 155 degrees, from about 150 degrees to about 170 degrees, from about 160 degrees to about 175 degrees, and from about 170 degrees to about 180 degrees (e.g., substantially in-line with shaft **68**).

[0177] As stated above, the first embodiment of the joint preparation tool **50** is configured to be used with a variety of interchangeable tooling heads **52**. Additionally, the tooling heads **52** may be used independently from the joint preparation tool **50**. In certain embodiments and referring to FIGS. **15**A-**15**D, the tooling head **52** may include an elongate shaft **116** coupled with an ellipsoidal head **118** at a distal end **120** of the tooling head **52**. A proximal end **119** of the tooling head **52** may include threading (not shown) in order to couple with the connector **70** of the joint preparation tool **50** described previously. In this embodiment, the ellipsoidal head **118** is a triaxial ellipsoid shape (semi-axes lengths C>B>A), however, the head **118** may be other shapes without departing from the teachings of this disclosure. As seen in the figures, the ellipsoid head **118** includes a rasp band **122** around one half of the circumference of the ellipsoid head **118**. The rasp band **122** may include a rough surface texture, or geometrically repeating or non-repeating pattern that is configured to abrade a boney surface of a patient (e.g., articular surface of the sacroiliac joint). In this particular embodiment, the rasp band **122** is a repeating cone-shaped pattern that is in the plane AB but is bounded on one side by axis A. While no rasp band **122** is depicted on the opposite side of the ellipsoid head **118**, such a side may include a similar or different type of rasp band **122**. For example, a less rough or "less aggressive" rasp band **122** may be included on the side opposite of the current rasp band **122** or simply on one half of the currently depicted rasp band **122**. In this way, the tooling head **52** may be used to simultaneously rasp two surfaces with different rasp bands **122**. In practice, such a tooling head **52** may be used to abrade the surfaces of the sacrum and the ilium in preparation for delivery of a joint implant. Since the sacrum is generally a softer bone than the ilium, the sacrum may require less abrasion than the ilium. Thus, the tooling head **52** with the ellipsoid head **118** having rasp bands **122** of differing roughness on opposite sides of the head **118** may be beneficial to rasp the ilium with a rasp band **122** having greater roughness and the sacrum with a rasp band **122** having less or no roughness.

[0178] Reference is now made to FIGS. **16**-**17**, which are isometric views of tooling heads **52** with bisected ellipsoidal heads **124** and bisected shafts **126**. The bisected ellipsoidal head **124** includes an ellipsoid shaped surface **128** on one side and a planar surface **130** opposite the ellipsoid shaped surface **128**. The planar surface **130** extends a length of the shaft **126** from a distal end to a proximal end **120**, **119**. In FIG. **16**, the bisected ellipsoidal head **124** includes a small rasp band **132** on a portion of the intersection of the planar surface **130** and the ellipsoidal shaped surface **128**. In this embodiment, the small rasp band **132** includes a single row of teeth or other geometrically repeating pattern; however, the small rasp band **132** may include other surfaces configured to abrade or rasp a surface. In FIG. **17**, the bisected ellipsoidal head **124** includes a rasp band **134** that is similar to that as described in FIGS. **15**A-**15**D. That is, the rasp band **134** wraps around the entirety of the ellipsoid shaped surface **128** and includes a rough surface texture, or geometrically repeating or non-repeating pattern that is configured to abrade a boney surface of a patient (e.g., articular surface of sacroiliac joint). This type of tooling head **52** may be useful, for example, when a single surface of a pair of opposed surfaces requires rasping. As such, the tooling head **52** may be used, for example, to rasp the ilium only while orienting the planar surface **130** generally parallel with a plane defined by the sacrum. Alternatively, the tooling head **52** may be oriented to rasp the sacrum while orienting the planar surface **130** in-line with the ilium.

[0179] Moving on, the discussion will focus on FIGS. **18**-**23** and additional types and configurations of tooling heads **52** that are applicable for use with the joint preparation tool **50**. Additionally and as discussed previously, the tooling heads **52** discussed herein may also be used independently from the joint preparation tool **50**.

[0180] Reference is now made to FIGS. **18**A-**18**D, which depict a tooling head **52** with a planar rasping head **136** at a distal end **138**. The planar rasping head **136** is configured to prepare a joint or boney surface for subsequent delivery of an implant. More particularly, the planar rasping head **136** may be used to abrade or roughen a joint surface, such as the sacroiliac joint, by removing cartilage from the joint and causing the boney surface of the sacrum and the ilium to hemorrhage, which may contribute to subsequent bone growth and fusion of the sacrum and the ilium.

[0181] As seen in the FIGS. **18**A-**18**B, the planar rasping head **136** is coupled to a shaft **140** that extends to a handle **142** at a proximal end **144** of the shaft **140**. A proximal end **146** of the handle **142** includes an impact plate **148** that is configured to be struck with a hammer, mallet, or other device in order to drive the planar rasping head **136** distally. While this embodiment is depicted with a handle **142** attached to the proximal end **144** of the shaft **140**, the shaft **140** could, alternatively, be coupled to the connector **70** of the joint preparation tool **50** described previously.

[0182] As seen FIGS. **18**A-**18**D, the planar rasping head **136** is a planar member that includes a pair of planar surfaces **150** opposite of and generally parallel to each other.

Alternatively, the pair of planar surfaces **150** may be non-parallel (not shown) and may taper. The planar surfaces **150** are disposed between a side edge **152** that wraps around the planar rasping head **136**. A distal tip **158** of the planar rasping head **136** is rounded, although, in other embodiments, the distal tip may be pointed, flat, or otherwise. The planar rasping head **136** includes a rasping surface **154** on the planar surfaces **150** and the side edge **152**. The rasping surface **154** may include ridges **156** in a chevron pattern, as seen in the figures, or other surfaces configured to roughen or abrade a biological surface. The rasping surface **154** may, for example, include geometrically repeating or non-repeating features (e.g., cones, pyramids, bubbles, spines, notches, teeth) formed by machining, surface treating, or otherwise.

[0183] As seen in FIG. **18**A, the planar rasping head **136** may include a width W**18** in a range of about 13 mm to about 19 mm. In certain instances, the width W**18** may be 13 mm, 16 mm, or 19 mm. As seen in FIG. **18**B, the planar rasping head **136** may include a thickness T**18** between the planar surfaces **150** in a range of about 5 mm to about 7 mm. In certain instances, the thickness T**18** may be 5 mm, 6 mm, or 7 mm.

[0184] Moving on, reference is made to FIGS. **19**A-**19**D, which depict a tooling head **52** with a planar rasping head **160** at a distal end **162** of the tooling head **52** that includes a single perpendicularly extending cutting element **164**. The planar rasping head **160** is a planar member that includes a planar top surface **166**, a planar bottom surface **168** opposite the top surface **166**, and a side edge **186** extending between the top and bottom surfaces **166**, **168**. The distal end **162** of the rasping head **160** includes a double chamfered tip **184**. Both the top and bottom surfaces **166**, **168** and the side edge **168** include a rasping surface **170** that is configured to abrade or roughen a boney surface or a joint. The rasping surface **170** may include a series of ridges **172** in a chevron pattern or otherwise, as described previously. The tooling head of this embodiment may also include a handle **142**, an impact plate **148**, and a shaft **140**, among other features, as described in previous embodiments.

[0185] As seen in the figures, the cutting element **164** extends generally perpendicularly upward from a central portion of the top surface **166**. The cutting element **164** is a planar member with opposite side surfaces **174** and a top surface **176** that includes a cutting element feature **178**, which, in this embodiment, includes a series of teeth **180** with a rounded blade-tip **182** at the distal most end. The planar rasping head **136** is configured to prepare a joint or boney surface for subsequent delivery of an implant. More particularly, the bottom surface **168** of the planar rasping head **136** may be used to abrade or roughen a joint surface, such as the sacroiliac joint, by removing cartilage from the joint and causing the boney surface of the sacrum and the ilium to hemorrhage, which may contribute to subsequent bone growth within the joint space. The top surface **166** with the cutting element **164**, on the other hand, may be used to cut into either the sacrum or the ilium in order to make way for a portion of an implant (e.g., keel or wing member) that will protrude into the bone of the sacrum or ilium. As previously described with reference to FIG. **5**, an implant may include keels that extend generally perpendicularly into each of the ilium and the sacrum. Thus, a tooling head **52** such as seen in FIGS. **19**A-**19**D may be useful in preparing a "keel-cut" into either or both of the sacrum or ilium such that when the implant **12** is delivered into the sacroiliac joint, the keels may be delivered and positioned within the keel-cuts made by the tooling head **52** with the planar rasping head **160** with the perpendicularly extending cutting element **164**. While the tooling head **52** is described with a single perpendicularly extending cutting element **164**, the head **52** may include a second cutting element (not shown) extending opposite the first cutting element **164** on the bottom surface **168** of the rasping head **160**. In this way, the tooling head **52** may perform dual keel-cuts simultaneously in both the sacrum and the ilium. In such an embodiment, the cutting element feature **178** may be different for each cutting element **164** since the ilium is a generally harder bone than the sacrum, which is generally softer.

[0186] As seen in FIG. **19**A, the planar rasping head **160** may include a width W**19** in a range of about 11 mm to about 17 mm. In certain instances, the width W**19** may be 11 mm, 14 mm, or 17 mm. Also seen in FIG. **19**A, the cutting element **164** may include a thickness T**19**A of about 2.5 mm. As seen in FIG. **19**B, the planar rasping head **160** may include a thickness T**19**B between the planar surfaces **166**, **168** in a range of about 5 mm to about 7 mm. In certain instances, the thickness T**19**B may be 5 mm, 6 mm, or 7 mm. Also as seen in FIG. **19**B, the planar rasping head **160** and the cutting element **164** may have a combined thickness TC**19**B in a range of about 5.5 mm to about 7.5 mm. In certain instances, the combined thickness TC**19**B may be about 5.5 mm, 6.5 mm, or 7.5 mm.

[0187] Moving on, reference is made to FIGS. **20**A-**20**C, which depict a tooling head **52** with a planar rasping head **160** at a distal end **162** of the tooling head **52** that includes a single perpendicularly extending cutting element **164**. This embodiment includes similar features to the tooling head **52** described in reference to FIGS. **19**A-**19**D, except that the present embodiment includes a smooth surface **188** instead of a rasping surface on the top surface, bottom surface, and side edges **166**, **168**, **186**. The present embodiment of the tooling head **52** may be useful in a surgical preparation when the articular surfaces of the sacroiliac joint need not be rasped, but merely require keel-cuts into the sacrum and/or the ilium in preparation for delivery of an implant.

[0188] Reference is now made to FIGS. **21**A-**21**C, which depict a tooling head **52** with a planar rasping head **190** with a pair of perpendicularly extending cutting elements **192** extending from side edges **194** of the head **52**. In this embodiment, the planar rasping head **190** is a planar member that includes a planar top surface **196**, a planar bottom surface **198** opposite the top surface **196**, both of which include a smooth surface texture **200**. The planar rasping head **190** also includes a double chamfered tip **202** at a distal end **204** of the rasping head **190**. Tip **202** may terminate distally in-line with the chamfered tip of cutting element **216**. Alternatively, tip **202** may extend a distance distally beyond the distal most portion of the chamfered tip of cutting element **216**, for example, said distance may be from about 1.5 mm to about 2.5 mm, from about 2 mm to about 3.5 mm, from about 3 mm to about 4.75 mm, from about 4.25 mm to about 6 mm, from about 5 mm to about 6.75 mm, from about 5.5 mm to about 8 mm, from about 7.5 mm to about 10 mm, from about 9 mm to about 11.5 mm and from about 11 mm to about 15 mm which may permit placement of a tip **202** within the plane of the joint thereby aligning cutting elements **192** to project toward or into the bone of the sacrum or ilium. Each of the cutting elements **192** includes an inner surface **206** that faces the smooth surface texture

200, an outer surface 208 opposite the inner surface 206 that is smooth and lies flush with the side edge 194, and a top surface 210 that includes a cutting element feature 212 that includes a series of teeth 214. A distal end of the cutting elements 192 includes a chamfered tip 216. Additionally, the tooling head 52 of the present embodiment may have similar features as described in the previous embodiments. The dimensions of the present embodiment may be similar to that as described in reference to FIGS. 19A-19D.

[0189] Such a tooling head 52 with a pair of cutting elements 192 may be used to perform dual keel-cuts in either or both of the ilium and sacrum for delivery of an implant with dual keels such as described in U.S. patent application Ser. No. 14/447,612, filed Jul. 31, 2014 and entitled SYSTEMS FOR AND METHODS OF FUSING A SACROILIAC JOINT, which is hereby incorporated by reference in its entirety. To prepare the sacroiliac joint for delivery of a dual keel implant, the tooling head 52 with the pair of cutting elements 192 may be inserted into the sacroiliac joint of a patient with the cutting elements oriented towards the ilium, for example, and the tooling head 52 may be advanced distally in the caudal region of the joint such that the cutting elements 192 cut into the boney surface of the ilium. Once at a far end of the caudal region, the tooling head 52 may be proximally withdrawn and repeated if desired. After sufficiently cutting into the ilium, the tooling head 52 may be withdrawn from the joint. Next, the tooling head 52 may be rotated one hundred and eighty degrees such that the cutting elements are oriented towards the sacrum. The tooling head 52 may then be advanced into the sacroiliac joint and make keel-cuts into the sacrum as described previously with reference to the ilium. Once the tooling head 52 is removed from the joint, the implant may then be delivered into the joint such that the implant keels are positioned within the keel-cuts made with the cutting elements 192 of the tooling head 52.

[0190] Continuing on, reference is made to FIGS. 22A-22D, which depict a tooling head 52 with a planar rasping head 190 at a distal end 204 of the tooling head 52 that includes a pair of perpendicularly extending cutting element 192. This embodiment includes similar features to the tooling head 52 described in reference to FIGS. 21A-21C, except that the present embodiment includes a rasping surface 218 instead of a smooth surface on the top and bottom surface 196, 198 of the rasping head 190. The rasping surface 218 may be as described previously and may include a series of ridges 220 in a chevron pattern. A planar rasping head 190 of this embodiment may be useful for simultaneously rasping the intra-articulating surfaces of the sacroiliac joint to remove cartilage or abrade the boney surfaces and make dual keel-cuts into either the sacrum or the ilium for the subsequent delivery of an implant having similarly featured keels.

[0191] Reference is now made to FIGS. 23A-23D, which depict a tooling head 52 with a box osteotome head 222. As seen in the figures, the box osteotome head 222 includes a planar top member 224, a planar bottom member 226 generally parallel to and opposite of the planar top member 224, a pair of side members 228 that extend generally perpendicularly between the top and bottom members 224, 226, and a pair of coaxially aligned openings 230 in the top and bottom members 224, 226. In this embodiment, the openings 230 are bounded by four edges 236; however, the configuration of the openings 230 may include a different number of edges 236 and shapes. The box osteotome head 222 defines a cavity 232 therein that is bounded by inner surfaces 242 of the top, bottom, and side members 224, 226, 228. The cavity 232 is open on a distal end 234 of the box osteotome head 222. A distal edge of the distal end 234 of each of the top, bottom, and side members 224, 226, 228 form a curved cutting edge 238 that includes an inward bevel 240 such that outer surfaces 244 of the members 224, 226, 228 extend further distally than the inner surfaces 242.

[0192] As seen in the figures, the tooling head 52 additionally includes a shaft 246 that is four-sided, a handle 248 coupled to a proximal end 250 of the shaft 246, and an impact plate 252 at a proximal end 254 of the handle 248. The tooling head 52 of this embodiment may additionally include features as described in the previous embodiments without limitation.

[0193] The box osteotome head 222 may be useful in a surgical procedure where a section of bone or cartilage is to be removed. The box osteotome head 222 may be distally advanced into the sacroiliac joint and bone and/or cartilage in contact with the cutting edge 238 will be cut and urged via the inward bevel 240 within the cavity 232. After an appropriate cut has been made, the box osteotome head 222 may be proximally removed from the joint space and the biological material within the cavity 232 may be removed through one or both of the coaxially aligned openings 230 in the top and bottom members 224, 226. The box osteotome head 222 may be used with the joint preparation tool 50, as described previously, or independently.

[0194] As seen in FIG. 23A, the box osteotome head 222 may include a width W23 in a range of about 13 mm to about 19 mm. In certain instances, the width W23 may be 13 mm, 16 mm, or 19 mm. As seen in FIG. 23B, the box osteotome head 222 may include a thickness T23 between the outer surfaces 244 of the top and bottom members 224, 226 in a range of about 5 mm to about 7 mm. In certain instances, the thickness T23 may be 5 mm, 6 mm, or 7 mm.

[0195] With reference to FIG. 23C, the shape of cavity 232 may generally match the shape of the implant which may be subsequently implanted into the void created by the head 222. In certain aspects, the cross sectional shape and dimensions of the cavity 232 may substantially match the corresponding cross sectional shape and dimensions of the implant to be implanted at the joint in the void created by head 222.

B. Joint Preparation Tool with Anchoring Arm

[0196] Reference is now made to FIG. 24A, which is a side view of a first embodiment of a joint preparation tool 256 attached to an anchoring arm assembly 258. The anchoring arm assembly 258 may be similar to as described in U.S. patent application Ser. No. 14/447,612, mentioned previously, and hereby incorporated by reference in its entirety. The joint preparation tool 256 may be similar to those described previously and may include a tooling head 260 as also described previously. As seen in FIG. 24A, the tooling head 260 includes a rasping head 284 with a pair of perpendicularly extending cutting elements 262 extending from side edges of the head 260. The tooling head 260 is attached to a handle 286 at a proximal end of the tool 256. Regarding the anchoring arm assembly 258, it includes an extension member 264 that extends from the joint preparation tool 256. A distal portion of the extension member 264 includes a pair of guide collars 272 that are configured to securely support and position an anchoring tool 274. The

anchoring tool **274** includes a tubular shaft **276** that is secured within the guide collars **272** via a set screw **278**. The anchoring tool **274** further includes a rotationally engaged handle **280** at a proximal end of the tool **274** that is configured to rotationally extend and retract an anchoring element **282** that is coupled to a distal portion of the tool **274**. The anchoring arm assembly **258** is configured to orient the anchoring element **282** in a single orientation relative to the rasping head **284**. That is, the anchoring arm assembly **258** or, more particularly, the orientation of the guide collars **272** relative to the rasping head **284** is fixed and nonadjustable once the anchoring arm assembly **258** is affixed to the joint preparation tool. In this and other embodiments, the orientation of the anchoring element **282** may be such that, when delivered into the joint space, the anchoring element **282** will be positioned cranial (above) to the rasping head **284**, caudal (below) to the rasping head **284**, or in-line with and distally of the rasping head **284**.

[0197] Turning to FIG. **24**B, reference is made to a preassembled state of the joint preparation tool **256** and the anchoring arm assembly **258**. As seen in the figure, the extension member **264** is coupled to and extends from a sleeve **266** that includes a lumen extending therethrough. The sleeve **266** is configured to receive a shaft **268** of the joint preparation tool **256** through the lumen. The sleeve **266** may be secured to the joint preparation tool **256** by any type of fastening mechanism such as, for example, corresponding threading on the sleeve **266** and a proximal portion **270** of the shaft **268** of the tool **256**. The rasping head **284** may be fixed to the shaft **268** of the joint preparation tool **256** or the head **284** may be releasably coupled to the shaft **268**.

[0198] Moving on to another embodiment of a joint preparation tool **256** attached to an anchoring arm assembly **258**, reference is made to FIG. **25**. The joint preparation tool **256** is identical to the tool **256** of FIGS. **24**A-**24**B. The anchoring arm assembly **258** of the present embodiment is similar to the assembly **258** in FIGS. **24**A-**24**B, except that the assembly **258** in the present embodiment includes a trio of guide collars **272**. Each guide collar **272** is configured to orient a tool (not shown) in a specific trajectory T**1**, T**2**, T**3** relative to the rasping head **284** of the joint preparation tool **256**. T**1** may, for example, orient an anchoring tool, as described previously, to deliver an anchor element cranial to the rasping head **284**. T**2** may, for example, orient an anchoring tool to deliver an anchor element distally, in-line with the rasping head **284**. T**3** may, for example, orient an anchoring tool to deliver an anchor element caudal to the rasping head **284**. T**2** may alternatively orient an anchoring tool to deliver an anchor element in-line with and towards a central portion of the rasping head **284**. In such an orientation, the rasping head may include an opening (not shown) on its planar surface that extends proximally from a distal edge of the rasping head **284** such that the rasping head **284** is pronged or fork-shaped. While the anchoring arm assembly **258** is described as coupling to an anchoring tool that delivers an anchoring element that may be a screw, the assembly **258** may couple with other types of tools. For example, the guide collars **272** may couple with a syringe barrel that delivers a bone paste or other biomaterial into the joint space to facilitate fusion of the boney surfaces of the joint.

[0199] While the anchor arm assemblies **258** of the various embodiments are described with reference to a joint preparation tool with a shaft attached with a handle at a proximal end of the tool, the anchor arm assemblies **258** may be used with other embodiments of the joint preparation tool. For example, the anchor arm assemblies **258** may be coupled with the joint preparation tool **50** with the slap hammer assembly **54** as described previously.

[0200] In another aspect, for example as shown and described in U.S. Provisional Patent Application 61/860,185, the anchor arm assembly **258** may be provided in the form of two or more linked structural elements thereby providing an adjustable elongate shape. For example, anchor arm assembly **258** may be telescoping and may include a first section ending in the first arm end and a second section ending in the second arm end; both sections may have matched circular arc shapes with a common center.

[0201] For example, FIG. **56**A and FIG. **56**B are side views of a telescoping anchor arm assembly **258**. Referring to FIG. **56**A, the anchor arm assembly **258** may include a first section **4102** ending in a first arm end **3802** and a second section **4104** ending in a second arm end **3804**; both sections **4102** and **4104** may have matched circular arc shapes with a common center **4110** as illustrated in FIG. **56**A. In an aspect, the second section **4104** may have a hollow cross-section with a central lumen (not shown), and the first section **4102** may be shaped and dimensioned to fit within the central lumen by sliding along the arc length of the second section **4104**. FIG. **56**B illustrates the anchor arm assembly **258** with a portion of the first section **4102** nested within the central lumen of the second section **4104**, resulting in a shorter elongate shape. The second section **4104** includes the second arm end **3804** as well as a sliding attachment fitting **4106** at an end of the second section **4104** opposite to the second arm end **3804**. The sliding attachment fitting **4106** may slide along the first section **4102** to adjust the relative position of the first arm end **3802** and second arm end **3804** as illustrated in FIG. **56**B. The elongate shape of the anchor arm assembly **258** and the sliding attachment fitting **4106** may be locked into a fixed position using a locking mechanism including, but not limited to, a set screw **4108** as illustrated in FIG. **56**A. Any other known locking mechanism may be used to lock the adjustable anchor arm assembly **258** into a locked position including, but not limited to clamps, pegs, compression fittings, and any combination thereof. In this aspect, the shorter elongate shape illustrated in FIG. **56**B may result in a change in the angle **4112** between the anchor element **18** and/or anchoring tool **274** and the implant **12** and/or tooling head **260**. The adjustability of the anchor arm assembly **258** may further facilitate fine-tuning the entry paths of the various components during formation of the implant assembly **14**, or delivery of the anchor element **18** relative to the tooling head **260**, to account for variability in patient morphology and/or to avoid injury to vulnerable tissues including, but not limited to, nerves and/or blood vessels.

[0202] In an aspect, the second section may have a hollow cross-section with a central lumen, and the first section may be shaped and dimensioned to fit within the central lumen by sliding along the arc length of the second section. A portion of the first section may be nested within the central lumen of the second section, resulting in a shorter elongate shape. The second section includes the second arm end as well as a sliding attachment fitting at an end of the second section opposite to the second arm end. The sliding attachment fitting may slide along the first section to adjust the relative position of the first arm end and second arm end. The elongate shape of the anchor arm assembly **258** and the

sliding attachment fitting may be locked into a fixed position using a locking mechanism including, but not limited to, a set screw. Any other known locking mechanism may be used to lock the adjustable anchor arm assembly **258** into a locked position including, but not limited to clamps, pegs, compression fittings, and any combination thereof. In this aspect, the shorter elongate shape may result in a change in the angle between the anchor and/or anchor guide and the implant body and/or implant guide. The adjustability of the anchor arm assembly **258** may further facilitate fine-tuning the entry paths of the various components during placement of the one or more anchors to account for variability in patient morphology and/or to avoid injury to vulnerable tissues including, but not limited to, nerves and/or blood vessels.

[0203] In other aspects, the anchor arm assembly **258** includes a straight horizontal segment and a straight vertical segment. The vertical segment includes the second arm end as well as a sliding attachment fitting at an end of the vertical segment opposite to the second arm end. The sliding attachment fitting may slide in a horizontal direction along the horizontal segment to adjust the relative position of the first arm end and second arm end. The position of the sliding attachment fitting may be locked into place using any known locking mechanism described previously above including, but not limited to, a set screw.

[0204] In various other aspects, the anchor arm assembly **258** may be made adjustable by the incorporation of any other adjustable elements known in the art. Non-limiting examples of suitable adjustable elements include: two or more hinged or jointed subsections of the anchor arm assembly **258**, two or more telescoping subsections of the anchor arm assembly **258**, one or more bendable subsections of the anchor arm assembly **258** having limited deformability, and any combination thereof. In other additional aspects, different sizes of fixed-geometry anchor arm assembly **258** may be used to provide a suitable range of installation tool geometries to account for differences in patient morphologies, differences in orthopedic surgical procedures, and any other variable factor governing the selection of an anchor arm assembly **258** geometry.

C. Joint Preparation Tool with Translating and Rotation Inhibiting Distal Handle Assembly

[0205] Reference is now made to FIG. **26**A, which is a side isometric view of a joint preparation tool **800** having a proximal handle **802** and a distal handle assembly **804** that is slidably attached to a shaft **806** of a tooling head **808**. The distal handle assembly **804** is configured to translate on the shaft **806** along a set trajectory that inhibits rotation of the handle assembly **804** relative to the proximal handle **802** and shaft **806**. The tooling head **808** may be similar to the various embodiments previously described and the joint preparation tool **800** may be configured to couple with any of the tooling heads described herein. In this embodiment, there is a cutting element **812** at a distal end **810** of the tooling head **808**. Referring to the distal handle assembly **804**, it includes a coupler member **816** that releasably secures to the shaft **806** of the tooling head **808**. Proximal to the coupler member **816** is a handle **818** that is coupled to the coupler member **816** via an adjustable socket assembly **820**.

[0206] With continuing reference to FIG. **26**A, the joint preparation tool **800** may be further configured to have an indicator **803** coupled to or integral with a component (e.g., the proximal handle **802**) of the joint preparation tool **800**. The indicator **803** may indicate a position or orientation of the cutting element **812** when the cutting element is positioned out of view of the surgeon (e.g., in a joint space). Alternatively, an indicator **803** may be fixed to a portion of the patient's skeleton to act as a reference during the course of the procedure. The indicator **803** may be configured as a body visible to a human user during the course of employing the joint preparation tool **800** or one of its components. Additionally, the body may be configured to be visible to a user while using fluoroscopy or CT scan (e.g., the body may comprise a material which is radiopaque) or be identifiable by an O-arm® Surgical Imaging System from Medtronic or similar device or a StealthStation® S7® surgical navigation system by Medtronic which has both optical and electromagnetic tracking options, or a StealthStation i7™ also by Medtronic. The indicator **803** may be used as a reference guide when directly viewed by the human user or when identified by a computer, surgical robot or imaging system. According to an aspect, the indicator **803** may be a reference array and may include 3 or 4 balls supported in a predetermined spaced apart arrangement and connected to one another by a frame. The frame may be coupled to a component of the tool **800** or may be separately coupled to a portion of the patient's skeleton or may be coupled to a delivery tool **16** of a system **10**.

[0207] In another aspect, the indicator **803** may indicate the position of the cutting element **812** supported by the tooling head **808** when the tooling head **808** may be obscured from view by the patient's soft tissues, by the positioning of the tooling head **808** within the joint, or by aspects of the operating environment which may otherwise obfuscate the arrangement or position of elements of the various components of the joint preparation tool **800**. For example, the indicators **803** may be elongate cylinders extending radially from a proximal handle **802** (or shaft of a tooling head **806**) longitudinal axis and projecting towards one or more outer cutting blades. In an aspect, the indicators **803** (when coupled to the tool **800**) have a longitudinal axis which is parallel to a cutting element axis which is defined as being coincident with the tooling head axis and also coincident with a point along a tip of an outer cutting blade **856**.

[0208] As such, the indicator **803** may permit a surgeon to align an outer cutting blade with the bone of an ilium and a second outer cutting blade with the bone of the sacrum. Alternatively or additionally, an indicator **803** may permit a surgeon to align an outer cutting blade **856** to be generally in-line with a plane of a sacroiliac joint.

[0209] As seen in FIG. **26**B, which is a cross-sectional view of the coupler member **816** of the distal handle assembly **804** and the shaft **806** of the tooling head **808**, the shaft **806** is hexagonal and includes six outer surfaces **840** that are configured to matingly slide within and against matching inner surfaces **814** of the coupler member **816**. The inner surfaces **814** of the coupler member **816** are hexagonal and sized slightly larger than the six outer surfaces **840** of the shaft **806** in order to facilitate sliding of the distal handle assembly **804** relative to the shaft **806**. As seen in the figure, the coupler member **816** includes two sections that are held together by fasteners (e.g., bolt, screw) **822**. In this way, the coupler member **816** is releasably secured to the shaft **806** via the fasteners **822**. And, when the coupler member **816** is secured to the shaft **806**, the coupler member **816**, along with

the socket assembly **820** and the handle **818**, are in a fixed position relative to the tooling head **808** and the proximal handle **802**. That is, the distal handle assembly **804** may translate on the shaft **806** of the tooling head **808**, but the distal handle assembly **804** may not rotate relative to the shaft **806**.

[0210] In one aspect, coupler member **816** may be caused to disengage matching inner surfaces **814** from outer surfaces **840** of the shaft **806** such that rotation between shaft **806** and coupler member **816** may be permitted. For example, coupler member **816** may be distally displaced relative to shaft **806** such that surfaces **814** and **840** disengage and then coupler member **816** may be rotated relative to shaft **806** to a different desired position and then coupler member **816** may be proximally displaced relative to shaft **806** such that inner surfaces **814** reengage the outer surfaces **840**.

[0211] Reference is now made to FIG. **26**C, which is an isometric front view of the joint preparation tool **800** with the distal handle assembly **804** in an exploded view. As seen in the figure, the socket assembly **820** is releasably secured to the coupler member **816** via a fastener **824** that is fitted within a passageway **826** through a socket member **828** of the socket assembly **820**. The fastener **824** may be threaded and may engage with corresponding threads in the coupler member **816**. The socket member **828** is coupled to the handle at a proximal end **830** of the socket member **828** and includes a socket opening **832** at a distal end **834** of the member **828**. The socket opening **832** leads to the passageway **826** and includes a six-sided inner surface **836** that may be engaged with a matching male-end of a six-sided member **838** on the coupler member **816**. As such, the socket member **828** may engage with and be secured to the six-sided member **838** in one of six orientations such that the handle **818** extends at differing orientations relative to the shaft **806** of the tooling head **808** and the proximal handle **802**. This adjustability may be useful for a surgeon to appropriately position the handle **818** for a particular surgical procedure.

[0212] The present embodiment of the joint preparation tool **800** with a translating and rotation inhibiting distal handle assembly **804** may be useful to prevent inadvertent rotating of the cutting element **812** out of a desired cutting trajectory. For example, since the ilium is generally a harder bone than the sacrum, there may be a tendency for the cutting element **812** to deflect from being driven into the ilium by twisting into the joint space where this is less resistance. Such twisting of the tooling head **808** may be damaging to the patient and may inaccurately prepare the joint surfaces for fusion.

[0213] In operation, the cutting element **812** at the distal end **810** of the tooling head **808** may be distally driven into a joint (e.g., sacroiliac joint) while a surgeon controls the trajectory of delivery. More particularly, a surgeon may grasp the handle **818** of the distal handle assembly **804** with one hand and the proximal handle **802** with the other hand. At this initial stage, the joint preparation tool **800** may be oriented as shown in FIG. **26**A, which depicts the distal handle assembly **804** in a distal position. The surgeon may then urge the proximal handle **802** distally while maintaining a stabilizing force on the distal handle assembly **804**. As the cutting element **812** is urged into the joint, the distal handle assembly **804** may displace proximally relative to the shaft **806** of the tooling head **808** as the surgeon maintains the stabilizing force on the assembly **804**. At this stage of the procedure, the joint preparation tool **800** may be oriented as shown in FIG. **26**D, which depicts the distal handle assembly **804** in a proximal position. In this way, the stabilizing force exerted on the distal handle assembly **804** ensures that the cutting element **812** is not caused to inadvertently rotate out of alignment during the delivery of the head **808** into the joint space.

[0214] Additionally, the coupler member may house a brake shoe which in turn may carry a brake block or pad. The brake shoe may be coupled to a brake caliper. The brake caliper may be manipulated by a user acting upon a lever which may be configured with an ergonomic lever handle and which may be coupled to the distal handle assembly **804**. Such a braking system may resist longitudinal and rotational forces between shaft **806** and coupler member **816**.

[0215] Moving on, reference is made to FIG. **26**E, which is an up-close side view of the cutting element **812**. As seen in the figure, the cutting element **812** includes a central cutting blade or central guide **842** and a pair of outer cutting blades **844**. The cutting element **812** also includes a front and back wall member **846** that extends between and couples the outer cutting blades **844** with the central cutting blade **842**. The front and back wall members **846** may include a distal beveled edge **848** extending between the outer cutting blades **844**.

[0216] Referring to FIG. **26**F, which is a cross-sectional side view of the cutting element **812**, it can be seen that the shaft **806** of the tooling head **808** tapers into the central cutting blade **842**. In between opposite sides of the central cutting blade **842** and the outer cutting blades **844** are passageways **850** that extend from the distal beveled edge to a proximal edge **852** of the cutting element **812**. In operation, as the cutting element **812** is distally advanced within a joint space articular cartilage and/or bone may be cut with the distal beveled edge **848** and the central and outer cutting blades **842**, **844** such that the severed bone/cartilage is caused to funnel through the passageway **850** to make way for additional bone/cartilage to be cut.

[0217] Such a cutting element **812** may be oriented within the joint plane or perpendicular to the joint plane. When oriented perpendicular to the joint plane, one of the outer cutting blades **844** may be positioned to cut the ilium and one of the outer cutting blades **844** may be positioned to cut the sacrum while the central cutting blade is positioned within the plane of the joint. Thus, as the tool **800** is distally advanced the cutting element **812** may make keel cuts into the sacrum and the ilium. The distal handle assembly **804**, as discussed previously, may be useful to provide a stabilizing force that ensure the cutting element **812** does not inadvertently twist or rotate given the differences hardness of the sacrum and ilium.

[0218] The cutting element **812** may be modified, as in FIG. **26**G, to include an elongated central cutting blade **842**. Such a cutting element **812** may be useful when the cutting element is oriented perpendicular to the joint plane, as described previously, in that the elongated central cutting blade **842** may urge the cutting element **812** to stay within the joint plane as opposed to easily cutting into one of the boney surfaces of the joint. The tip **854** of the elongated central cutting blade **842** may be blunt to further urge the central cutting blade **842** to remain within the joint plane.

[0219] As seen in FIG. **26**G, sample dimensions of the cutting element **812** may be as follows. The outer cutting

blades may extend a distance D4 from the distal edge **848** to a distal tip **856** of about 0 mm to about 1.75 mm, from about 1.5 mm to about 2.5 mm, from about 2 mm to about 3.5 mm, from about 3 mm to about 4.75 mm, from about 4.25 mm to about 6 mm, from about 5 mm to about 6.75 mm, from about 5.5 mm to about 8 mm, from about 7.5 mm to about 10 mm, from about 9 mm to about 11.5 mm, and from about 11 mm to about 13 mm. In certain embodiments, the distance D4 may be about 1 mm, 3 mm, or 5 mm. The elongated central portion **842** may extend a distance D5 from the distal edge **848** to the tip **854** of about 3 mm to about 4.75 mm, from about 4.25 mm to about 6 mm, from about 5 mm to about 6.75 mm, from about 5.5 mm to about 8 mm, from about 7.5 mm to about 10 mm, from about 9 mm to about 11.5 mm, from about 11 mm to about 13 mm, and from about 12.5 mm to about 15 mm. In certain embodiments, the distance D5 may be about 5 mm, 6.5 mm, or 8 mm. The elongated central portion **842** may extend a distance D6 beyond that of the distal tips **856** of the outer cutting blades by about 3 mm to about 15 mm. In certain embodiments, the distance D6 may be about 5 mm, 6.5 mm, or 8 mm. A distance D7 between the distal and proximal edges **848**, **852** may be about 1.5 mm to about 2.25 mm, from about 2 mm to about 3.5 mm, from about 3 mm to about 4.75 mm, from about 4.25 mm to about 6 mm, from about 5 mm to about 6.75 mm, from about 5.5 mm to about 8 mm, from about 7.5 mm to about 10 mm, from about 9 mm to about 11.5 mm, from about 11 mm to about 13 mm, and may even range up to 40 mm-60 mm. In certain embodiments, the distance D7 may be 3.5 mm, 7.5 mm, 15 mm, 30 mm 40 mm or 45 mm. A distance D8 may be defined between one of the outer cutting blades **844** and the elongated central cutting blade **842**. D8 may be in a range of about 2.25 mm to about 2.75 mm, from about 2 mm to about 3.5 mm, from about 3 mm to about 4.75 mm, from about 4.25 mm to about 6 mm, from about 5 mm to about 6.75 mm, from about 5.5 mm to about 8 mm, from about 7.5 mm to about 10 mm, from about 9 mm to about 11.5 mm, from about 11 mm to about 13 mm. In certain embodiments, the distance D8 may be about 6 mm, 8 mm, or 10 mm.

[0220] While the cutting element is shown in FIGS. **26**E-**26**G as including a certain configuration of cutting blades, other arrangements are possible and contemplated herein. For example, a cutting element **812** may include serrated cutting blades and may include additional or fewer cutting blades than are depicted in the figures. In one aspect, there may be four passageways **850** arranged into two pairs. The first pair may be arranged such that the first and second passageways are positioned and aligned relative to one another similar to the configuration in FIGS. **26**F-**26**G such that a back wall member **846** of the first passageway is generally coplanar with a back wall member **846** of the second passageway and forming a first plane. The second pair of passageways **850** may also have a relationship between each of the second pair passageways **850** similar to the first and second passageways of the first pair of passageways such that a back wall member **846** of the first passageway of the second pair is generally coplanar with a back wall member **846** of the second passageway of the second pair and forming a second plane. The second pair of passageways may be arranged relative to the first pair of passageways such that the first plane formed by the first pair of back wall members is generally perpendicular to the second plane formed by the second pair of back walls.

D. Joint Preparation Tool with Trial Fit Implant and Cutting Tool with Translating Cutting Element

[0221] The discussion of preparing the sacroiliac joint, among other joints, for implant delivery will now focus on additional tools that may be used independently from or in combination with the previously mentioned tools.

1. Trial Fit Assembly and Cutting Tool with Offset Shafts

[0222] To begin, reference is made to FIG. **27**, which is an isometric side view of a joint preparation tool assembly **300** that is configured to test-fit an implant size and make a transverse cut into either or both the sacrum and ilium to make way for a keel of an implant that is configured to extend into the bone. As seen in the figure, the joint preparation tool assembly **300** includes a trial tool assembly **302** and a cutting tool **304** that is configured to translate relative to the trial tool assembly **302** in order to make the transverse keel-cuts into the patient's bone.

[0223] The trial tool assembly **302** includes an implant trial **306** at a distal end **308** of the assembly **302**. The implant trial **306** is a planar member with a tapered tip **310** that includes a width **312** that corresponds with a width of an implant that may be subsequently delivered into a joint. The implant trial **306** may be removably coupled with a shaft **314** that extends proximally. The shaft **314** is removably attached to a handle assembly **316** at a proximal end **318** of the shaft **314**. The handle assembly **316** includes a coupler **320** configured to removably attach to the shaft **314** of the trial tool assembly **302**. The coupler **320** is attached to a handle shaft **410** that extends to a gripping handle **322**.

[0224] As mentioned previously, the implant trial **306** is used to gauge the size of the joint space so that an implant size may be chosen that best fits the joint space. Thus, the system described herein may include implant trials **306** of various sizes and configurations in order to gauge the size of the joint space. In operation, a surgeon may begin a surgical procedure by test-fitting the smallest size of implant trial **306** into the patient's joint to determine the fit. If the size of the implant trial **306** is too small, then the surgeon may remove the implant trial **306** and deliver a larger size implant trial **306** into the joint. Once an appropriate size of implant trial **306** is received within the joint, the surgeon may use the cutting tool **304** to deliver transverse keel-cuts into the boney surfaces in preparation for the implant delivery.

[0225] The cutting tool **304** is slidably coupled to the shaft **314** of the trial tool assembly **302** and configured to slide distal-proximal on the shaft **314**. The cutting tool **304** is slidably coupled to the shaft **314** via a distal and a proximal collar **324** that extend around the shaft **314** of the trial tool assembly **302**. The collars **324** are separated by a gap and are attached to a cutting tool shaft **326** that extends proximally. The cutting tool shaft **326** includes a curved mid-portion **328** such that the shaft **326** angles away from the shaft **314** of the trial tool assembly **302**. A proximal end **330** of the cutting tool shaft **326** includes an impact plate **332** that is configured for being hit with a hammer or similar device to drive the cutting tool **304** distally. In this way, the surgeon may securely hold the handle **322** of the trial tool assembly **302** with one hand and strike the impact plate **332** with the other hand.

[0226] Reference is now made to FIG. **28**, which is an isometric view of an opposite side of the joint preparation tool assembly **300**. As seen in the figure, a distal end **334** of the cutting tool **304** includes a cutting element **336** that extends within a guide **338** formed in a top surface **340** to the

tapered tip **310** of the implant trial **306** when the cutting element **336** translates relative to the implant trial **306**. A distal tip **344** of the cutting element extends to the tapered tip **310** of the implant trial **306** when the shaft **326** of the cutting tool **304** abuts a proximal end **346** of the implant trial **306**. The cutting tool **304** is configured to maintain an orientation relative to the guide **338** when the cutting element **336** is proximally retracted or distally extended towards the guide **338** via a channel **342** formed in the shaft **314** of the trial tool assembly **302**.

[0227] For a detailed discussion of the cutting tool **304**, reference is made to FIGS. **29-30**, which are isometric views of the cutting tool **304**. As seen in FIG. **29**, the cutting tool **304** includes a protrusion **348** on each inner surface **350** of the collars **324** that extend around the shaft **314** of the trial tool assembly **302**. The protrusion **348** is configured to fit within the channel **342** formed in the shaft **314** of the trial tool assembly **302** such that the shaft **314** cannot rotate when the protrusion **348** is fitted within the channel **342**. Reference is now made to FIG. **30**, which is a close-up view of the distal end **334** of the cutting tool **304**. As seen in this figure, the protrusion **348** is semi-hemispherical and extends a length of the collars **324**. Other shapes for the protrusion **348** are possible and contemplated herein.

[0228] Turning to the distal end **334** of the cutting tool **304** and still referring to FIG. **30**, the cutting element **336** is a six-sided, box-type chisel with planar outer surfaces **360** that distally terminates in a beveled cutting edge **362** that forms a distal opening **364** that extends to lumen extending through the cutting element **336**. While this embodiment of the cutting element **336** includes a six-sided, box-type chisel, other arrangements and designs of cutting tool elements **336** are contemplated herein. For example, a rectangular, box-type chisel, knife blade, or saw may be used without departing from the teachings of the disclosure.

[0229] Continuing with FIG. **30**, the cutting element **336** further includes a cutting element guide **352** that extends off of the cutting element **336** and extends just proximally from the distal tip **334** of the cutting element **336** to a proximal end **354** of the cutting element **336**. The cutting element guide **352** includes a rounded head **356** and a neck **358** that is thinner than a widest part of the head **356**. Alternatively, cutting element guide **352** and guide channel **366** may have complementary dovetail or flaring tenon and mortise configurations. As seen in FIG. **31**, which is an isometric view of the cutting element **336** and implant trial **306** with a cross-section at the proximal end **354** of the cutting element **336**, the cutting element guide **352** is received within a guide channel **366** that is a corresponding shape to that of the cutting element guide **352**. In particular, the guide channel **366** includes a neck region **368** and a head region **370** that are only slightly larger than the corresponding neck **358** and head **356** of the cutting element guide **352**. The guide channel **366** extends from a proximal surface **372** to a distal surface **374** of the implant trial **306**. In this way, as the cutting tool **304** and, more particularly, the cutting element **336** are translated distally, the cutting element guide **352** is received within the guide channel **366**, which ensures that the cutting element **336** remains within the guide **338** on the top surface **340** of the implant trial **306** during a cutting operation. Stated differently, the guide channel **366** prevents rotation and other errant movement of the cutting element **336** during a cutting operation such that the cutting element **336** remains reliably within the guide **338** to perform repeatable and accurate cuts into the patient's bone.

[0230] Still referring to FIG. **31** and also extending through the implant trial **306** from the proximal surface **372** to a distal surface **374** is a bore **376** that is configured receive a guidewire or similar device to guide the implant trial **306** into a joint space, for example. As best seen in FIGS. **32-33**, which are respective front and back views of the implant trial **306**, both the bore **376** and the guide channel **366** extend through the implant trial **306** parallel to a longitudinal axis of the implant trial **306**. While shown in the figures as generally linear, the longitudinal axis of the implant trial **306** may be curved and may further include an arcuate portion with a radius between from about 3 cm and about 6 cm and may be about 2 cm, 2.5 cm, 3 cm, 3.5 cm, 4 cm, 4.5 cm, 5 cm, 5.5 cm, 6 cm, 6.5 cm and 7 cm. In one aspect, while shown in the figures as generally linear, the guide channel **366** may be curved and may further include an arcuate portion with a radius that matches the curved implant trial **306**. The radius of the arcuate portion of the guide channel **366** may be between from about 3 cm and about 6 cm and may be about 2 cm, 2.5 cm, 3 cm, 3.5 cm, 4 cm, 4.5 cm, 5 cm, 5.5 cm, 6 cm, 6.5 cm and 7 cm. In another aspect, while shown in the figures as generally linear, the implant trial **306** may be curved and may further include an arcuate portion with a radius between from about 3 cm and about 6 cm and may be about 2 cm, 2.5 cm, 3 cm, 3.5 cm, 4 cm, 4.5 cm, 5 cm, 5.5 cm, 6 cm, 6.5 cm and 7 cm. In yet another aspect, the implant trial **306** and the guide channel **366** may both include a matching radius.

[0231] Still referring to FIGS. **32-33**, while the guide **338** is centered between opposite side surfaces **378** of the implant trial **306**, the bore **376** and the head region **370** of the guide channel **366** are offset from a center point between the opposite side surfaces **378**. As seen in the figures, the guide **338** is an extrusion with a bottom surface **380** that is generally perpendicular to a pair of side surfaces **382**. The bottom surface **380** adjoins one of the side surfaces **382** to form a perpendicular angle between the two surfaces while the opposite pair of surfaces are transected by the guide channel **366** extending about one hundred and thirty-five degrees from each of the bottom surface **380** and the side surface **382**.

[0232] Reference is now made to FIG. **33** and the proximal end **346** of the implant trial **306**. As seen in the figure, the channel **342** in the shaft **314** of the trial tool assembly **302** mirrors a portion of the circumference of the bore **376** extending through the implant trial **306**. In this way, the trial tool assembly **302** may be delivered into a sacroiliac joint, or other joint, of a patient by way of a guidewire (not shown) being received through the bore **376** of the implant trial **306** which was previously delivered into the joint. The channel **342** in the shaft **314** provides a passageway for the guidewire when the trial tool assembly **302** is advanced into the joint. Subsequently, when it is appropriate to use the cutting tool **304** with the trial tool assembly **302**, the channel **342** provides the function of guiding the cutting tool **304** in an appropriate orientation by aligning the protrusion **348** within the collars **324** of the cutting tool **304** within the channel **342** of the shaft **314** of the trial tool assembly **302**.

[0233] As seen in FIGS. **43**E and **43**F, the implant trial **306** may have a locking means which reversibly secures the trial **306** within the joint during certain steps in the procedure. For example, the proximal surface **372** of the implant trial

306 may have at least one passageway 307, which communicates with either a top of bottom surface 340, which is configured to receive an anchoring member 305 which may be proximally acted upon to reversibly transition from a recessed condition to a deployed condition. The recessed condition, as seen in FIG. 43E, is such that the anchoring member 305 is recessed within the passageway 307 or simply not extending beyond the top surface 340 and thereby not engaging a bone defining the joint and thereby not preventing movement of the implant trial 306 relative to the joint. The deployed condition, as seen in FIG. 43F, is such that the anchoring member 305 projects out of the passageway 307 from the top surface 340 thereby engaging a bone of the joint which may prevent or at least limit the movement of the implant trial 306 during the course of the procedure. The anchoring member 305 may be a spike, pin, dart, screw or other suitable locking or restraining member.

[0234] As further seen in FIG. 34, which is a front view of the trial tool assembly 302, an outer surface 384 of the shaft 314 of the trial tool assembly 302 lies flush with one of the outer surfaces 378 of the implant trial 306. As discussed previously, the proximal end 318 of the shaft 314 in configured to engage with a handle assembly 316. To facilitate the coupling of the shaft 314 and the handle assembly 316, the shaft 314 includes a notch or indent 386 within the outer surface 384 of the shaft 314. Proximally from the notch 386 is a stop feature 388 that defines a partial planar resection or flattening 390 of the outer surface 378 of the shaft 314.

[0235] For a discussion of the engagement of the handle assembly 316 with the shaft 314, reference is made to FIG. 35, which is a cross-sectional isometric view of the handle assembly 316 and the proximal end 318 of the shaft 314. As seen in the figure, the coupler 320 includes a cylindrical sidewall 404 and a flat impacting end 412 at a proximal end 414 of the coupler 320. Opposite the proximal end 414, a distal end 394 of the coupler 320 includes an opening 392 that is configured to receive the proximal end 318 of the shaft 314. The opening 392 includes a passageway that extend partially through the coupler 320 and includes a proximal inner surface 396 that is sized slightly larger than the proximal end 318 of the shaft 314. The inner surface 396 includes a planar inner surface portion 398 that matches the planar surface 390 of the shaft 314 such that when the shaft 314 is inserted into the opening 392, the planar surface 390 of the shaft 314 lies flush and opposed with the planar inner surface 398 of the opening 392 in a single orientation. When the shaft 314 is fully inserted into the opening 392, the stop feature 388 abuts a corresponding feature 400 on the inner surface 396 of the opening 392, which prevents further extension of the shaft 314 into the opening 392. Also, when the stop feature 388 abuts the corresponding feature 400, the notch 386 is aligned with a lock feature 402 that extends through a bore in the cylindrical sidewall 404 of the coupler 320. The lock feature 402 includes a tubular member that is configured to extend through the sidewall 404 and into the notch 386 while still being partially positioned in the sidewall 404 in order to lock the shaft 314 in place relative to the coupler 320. The lock feature 402 may be engaged and disengaged from within the notch 386 by activation of a set screw 406 or similar mechanism. In this embodiment, the set screw 406 is maintained within the sidewall 404 of the coupler by a retainer 408 that inhibits movement of the set screw 406 from full retraction outside of the sidewall 404. The function of the lock feature 402 and the set screw 406 may be accomplished with many different mechanisms and methods. For example, the set screw 406 may be substituted for a mechanical switch that forces the lock feature 402 into the notch 386 when the switch is engaged. This and other such mechanisms are possible and contemplated by this disclosure.

[0236] Turning now to FIGS. 36A-36B, reference is made to another embodiment of the cutting tool 304. As seen in FIG. 36A, the cutting tool 304 include a similar shaft 326 with a curved mid-portion 328, distal and proximal collars 324 for receiving a shaft of a trial tool assembly, and an impact plate 332 at a proximal end 330 of the cutting tool 304 as described with reference to the previous embodiment of the joint preparation tool assembly 300. The present embodiment differs, however, from the previously described embodiment of the joint preparation tool assembly 300 in that it includes a saw-blade type cutting element 416 at a distal end 334 of the cutting tool 304. Referring to FIG. 36B, which is a close-up isometric view of the distal end 334 of the cutting tool 304, the cutting element 416 extends from a planar distal surface 418 of the tool 304 and includes opposite side surfaces 420, a bottom surface 422, and a top surface 424 that includes a series of teeth 426 arranged in a saw tooth shape that is configured to cut during a distal extension of the cutting tool 304. The series of teeth 426 extend generally perpendicularly from a top surface 430 of the shaft 326. At a distal end 334 of the cutting tool 304, the top surface 424 of the cutting element 416 tapers towards the bottom surface 422 to form a rounded, tapered distal tip 428.

[0237] In certain embodiments of the cutting tool 304, the cutting element 416 may include a width W416 between the opposite side surfaces within a range of about 1 mm to about 1.25 mm, from about 1 mm to about 1.75 mm, from about 1.5 mm to about 2.25 mm, from about 2 mm to about 2.75 mm, from about 2.5 mm to about 3 mm, from about 2.75 mm to about 4.25 mm, from about 4 mm to about 5 mm, from about 4.75 mm to about 6 mm, from about 5.75 mm to about 7 mm, and from about 6.5 mm to about 7.5 mm. In certain instances, the width W416 may be about 1.5 mm, 1.75 mm, 2 mm, 2.75 mm, 3 mm or 3.5 mm X. In certain embodiments, the cutting element 416 may include a length L416 from the planar distal surface 418 to the tapered distal tip 428 within a range of about 10 mm to about 15 mm, from about 13 mm to about 20 mm, from about 17.5 mm to about 30 mm, from about 25 mm to about 37.5 mm, from about 35 mm to about 40 mm, from about 37 mm to about 50 mm. In certain instances, the length L416 may be about 27 mm, 30 mm, 37 mm, or 40 mm. In certain embodiments, the cutting element may include a height H416 from the bottom surface 422 to the series of teeth 426 within a range of about 2.25 mm to about 2.65 mm, from about 2.5 mm to about 3 mm, from about 2.75 mm to about 4.25 mm, from about 4 mm to about 5 mm, from about 4.75 mm to about 6 mm, from about 5.75 mm to about 7 mm, from about 6.5 mm to about 7.5 mm, from about 7 mm to about 8.75 mm, from about 8.5 mm to about 9.75 mm and from about 9.5 mm to about 11.25 mm. In certain instances, the height H416 may be about 3.25 mm, 4 mm, 4.5 mm, 5 mm or 5.25 mm.

[0238] The cutting tool 304 of FIGS. 36A-36B is configured to be used with the trial tool assembly 302 as described previously. The cutting tool 304 in FIGS. 36A-36B may be useful, for example, in making a keel-cut into either the sacrum or the ilium after the implant trial of the trial tool assembly is delivered non-transversely into the sacroiliac

joint. Since the cutting element **416** extends generally perpendicular from the shaft **326** of the cutting tool **304**, when the implant trial is positioned non-transversely within the sacroiliac joint, the series of teeth **426** will be oriented generally perpendicularly to the sacrum/ilium such that a distal extension of the cutting tool **304** will provide a cut into the bone that may match a keel or wing member of an implant to be subsequently implanted into the joint space.

[0239] Reference is now made to FIGS. **36**C-**36**E, which depict an alternative implant trial **306** and cutting element **416**. As seen in FIG. **36**C, the cutting element **416** may include interconnected teeth **764** forming a chain that are configured to rotate around a portion of the implant trial **306**. The interconnected teeth **764** may be segmented into individual teeth **764** and each segmented tooth **764** may be in-line and linked with one another via rivets **766** or similar mechanisms. The interconnected teeth **764** may be configured similar to a tooth on a chainsaw and dimensioned as herein described, however, the overall length of each tooth **764** will be a fraction of the total length L**416** of the cutting element segment assembly. For example, if the assembly comprises three teeth **764**, than the length of each tooth will be approximately one third of the overall length L**416** of the cutting element segment assembly. In an aspect, an assembly comprises fifteen teeth **764** with each tooth approximately 2 mm in length. In one aspect, the teeth **764** are configured similar to chipper teeth or an OREGON no. 10 chipper chain, one of many STIHL saw chains or even a full-chisel chain. In other aspects, the teeth **764** may be configured as other linked-chains known in the art.

[0240] The interconnected teeth **764** may be configured to rotate through a portion of a length of the implant trial **306** such that a portion of the teeth **764** extend above a top surface **768** of the implant trial **306**. Thus, in operation and during rotation, the interconnected teeth **764** are configured to deliver a cut (e.g., keel-cut) into a joint bone when the implant trial **306** is positioned within a joint space. The interconnected teeth **764** opposite the top surface **768**, may extend outward from a bottom surface of the implant trial **306** such that rotation of the interconnected teeth **764** delivers simultaneous cuts to opposing bones in a joint space. Or, alternatively, the teeth **764** opposite the teeth **764** on the top surface **768** may remain housed within a passageway within the body of the implant trial **306** such that the teeth **764** only contact a joint bone that opposes the top surface **768**.

[0241] Referring to FIG. **36**D, which is a top view of an implant trial **306** that is suitable for use with the cutting element **416** described previously, the implant trial **306** may include a first guide or channel **338** formed in the top surface **768** and a second guide or channel (not shown) formed in the bottom surface of the implant trial **306**, which is opposite the top surface **768** and not shown in FIG. **36**D. And, at a distal end **774** of the implant trial **306**, there may be a passageway **770** communicating between implant trial top and bottom surfaces **768**. The passageway **770** may be configured and dimensioned to receive the interconnected teeth **764** as they run distal-proximal along the first and second guides **338** through the passageway **770**. Such a configuration of the interconnected teeth **764** with the implant trial **306** having a passageway **770** at the distal end **774** may permit use of a rotating chain of teeth while protecting a patient's tissue that is distal to the distal end **774** of the implant trial **306**.

[0242] Referring now to FIG. **36**E, which is an isometric view of an arcuate implant trial **306** coupled with a shaft **780**, the teeth **764** may be linked together such that they pivot relative to one another with a pivot axis which is generally perpendicular to the length of the trial guide **338** and perpendicular to the top surface **768** of the implant trial **306**. Such a configuration would permit a saw chain of interconnected teeth **764** to travel an arcuate path via an arcuate trial guide path **772** formed on a generally planar implant trial top surface **768** where the opposite side surfaces **776** of implant trial **306** are curved and have a radius of approximately 2 cm to about 8 cm. In this arrangement a cutting tip of the interconnected teeth **764** remains oriented perpendicular to the top surface **768** of the implant trial **306**; however, the orientation of the pivot **766** is altered from the previous embodiment. As described previously, the interconnected teeth **764** may travel along the arcuate trial guide path **772** until the teeth **764** enter the passageway **770** at the distal end **774** of the implant trial **306**. The teeth **764** may then exit the passageway **770** and travel proximally on the arcuate trial guide path **772** formed on the bottom surface **778** of the implant trial **306**. In this arrangement, the interconnected teeth **746** may include an additional pivot **766** oriented generally perpendicular to the previously described pivot **766** such that the additional pivot **766** enables movement of the chain of interconnected teeth **764** to travel through the passageway **770**. Alternatively, the implant trial **306** may not include a passageway **770** and the teeth **764** may simply translate distally-proximally within the guide paths **772**.

[0243] Other cutting elements **416** are possible and contemplated herein. For example, the cutting element **416** may include a serrated or smooth knife blade. And, the joint preparation tool assembly **300** may include a series of cutting tools **304**, each cutting tool **304** with progressively larger (e.g., wider) blades that may or may not be used in succession to make larger and larger cuts until a desired cut size is made for subsequent implant delivery.

2. Trial Fit Assembly and Cutting Tool with Coaxially Aligned Shafts

[0244] Turning now to another embodiment of a joint preparation tool assembly **450**, reference is made to FIG. **37**. As seen in the figure, the joint preparation tool assembly **450** includes a trial tool assembly **452** and a cutting tool **454** that translates on a shaft **456** of the trial tool assembly **452**. The cutting tool **454** includes a tubular shaft **458** having an outer surface **460**, an inner surface **462**, and a hollow interior space **464**. The tubular shaft **458** also includes a series of apertures **466** extending from the outer surface **460** to the inner surface **462** of the shaft **458**. The apertures **466** provide for easier and improved steam cleaning compared with a tubular shaft without apertures. The apertures **466** also reduce weight of the assembly **450**, among other benefits. The tubular shaft **458** or, more particularly, the hollow interior space **464** is configured to receive the shaft **456** of the trial tool assembly **452** such that the shafts **456**, **458** are coaxially aligned. At a proximal end **468**, the cutting tool **454** includes a handle **470**. At a distal end **472**, the cutting tool **454** includes a cutting element **474**, which, in this embodiment, is a box-type chisel as described previously.

[0245] Regarding the trial tool assembly **452**, the assembly includes an implant trial **476** at a distal end **478** of the assembly. As seen in FIG. **38**, which is an isometric view of the cutting tool **454** and the trial tool assembly **452** in an

uncoupled state, it can be seen that the trial tool assembly **452** is similar to and may include the same or different features of the joint preparation tool assembly **300** discussed previously in FIGS. **27-35**. That is, the trial tool assembly **452** includes the implant trial **476** at the distal end **478** of the assembly, a guide **480** on a top surface **482** of the implant trial **476**, and a guide channel **484** that is configured to guide the cutting element **474** during translation of the cutting element **474** within the guide **480** of the implant trial **476**.

[0246] To couple the trial tool assembly **452** and the cutting tool **454**, the shaft **456** of the trial tool assembly **452** is received through a pair of collars **486** on the cutting tool and is translated proximally such that the shaft **456** is received within the tubular shaft **458** of the cutting tool **454**. As seen in FIG. **38**, the cutting tool **454** includes a protrusion **488** within each of the collars **486** that fit within a corresponding channel **490** formed within an outer surface **492** of the shaft **456** of the trial tool assembly **452**. The interaction of the protrusion **488** and the corresponding channel **490** ensures that the trial tool assembly **452** maintains its orientation relative to the cutting tool **454** during distal-proximal movement. As the trial tool assembly **452** is proximally retracted within the tubular shaft **458** of the cutting tool **454**, a cutting guide element **494** of the cutting tool **454** will engage with and be received within the guide **480** of the implant trial **476**. The interaction of the cutting guide element **494** and the guide **480** and guide channel **484** further ensures that the orientation of the cutting tool **454** and the trial tool assembly **452** will be maintained during a cutting stroke of the cutting tool **454** during a surgical procedure.

3. Trial Fit Assembly, Cutting Tool, and Trial Impact Rod with Coaxially Aligned Shafts

[0247] Turning now to another embodiment of a joint preparation tool assembly **500**, reference is made to FIG. **39**, which depicts the individual components of the assembly **500** in an uncoupled state. As seen in the figure, the joint preparation tool assembly **500** includes a trial tool assembly **502**, a trial impact rod assembly **504**, a handle assembly **506**, and a cutting tool **508**.

[0248] In one aspect, the trial impact rod assembly **504** is configured to be used in conjunction with the trial tool assembly **502** to provide stability during delivery of a distal end **510** of the trial tool assembly **502** into a joint of a patient. In particular, slidable coupling of the trial impact rod assembly **504** and the trial tool assembly **502** adds stability and rigidity to the assembly **500** by reducing potential bending, among other movements, of the trial tool assembly **502** shaft **512** during a striking of the handle assembly **506**.

[0249] In another aspect, the cutting tool **508** is configured to be used in conjunction with the trial tool assembly **502** to deliver a transverse keel-cut into a bone of a joint. For example, the distal end **510** of the trial tool assembly **502** may be delivered non-transversely into a sacroiliac joint of a patient with stabilizing support from the trial impact rod assembly **504** and, then, once the trial impact rod assembly **504** is decoupled from the trial tool assembly **502**, the cutting tool **508** may be may be slidably coupled with the trial tool assembly **502** and used to transversely cut into either or both of the sacrum and the ilium to make way for subsequent delivery of an implant having transversely extending members that match the cuts made into the sacrum/ilium. In each of the examples described above, the handle assembly **506** may be coupled to a proximal end of the trial impact rod **504** or the cutting tool **508** and a device (e.g., hammer, mallet) may be used to strike the handle assembly **506** in order to distally drive the assembly **500**.

[0250] To begin the discussion of the components of the joint preparation tool assembly **500**, reference is made to the trial tool assembly **502** in FIG. **39**. As seen in the figure, the trial tool assembly **502** includes an implant trial **514** at the distal end **510** of the assembly **502**. The implant trial **514** is a planar member with a top surface **516**, a bottom surface **518** that is opposite the top surface **516**, and opposite side surfaces **520**. The top surface **516** includes a channel **522** that guides a cutting element **524** of the cutting tool **508**. The channel **522** extends from a tapered distal tip **526** to a proximal end **528** of the implant trial **514** and is coaxial with a shaft channel **530** that extends the length of the shaft **512** from the proximal end **528** of the implant trial **514** to a proximal end **532** of the shaft **512**. In this way, the cutting element **524** of the cutting tool **508** may be guided along the shaft channel **530** while the cutting element **524** is proximal of the implant trial **514**. And, when the cutting element **524** is distally advanced it will also be guided by the channel **522** in the top surface **516** of the implant trial **514**. Shaft channel **530** may simply be a planar surface along shaft **512** and aligned with a corresponding planar surface of channel **522**.

[0251] As seen in FIG. **39**, the shaft **512** of the trial tool assembly **502** is centrally positioned on a proximal surface **534** of the implant trial **514**. On the proximal surface **534** of the implant trial **514** and on either side of the shaft **514** are bores **536** that extend distally through a portion of the implant trial **514**. The bores **536** are configured to receive a corresponding pair of stud members **538** on a distal end **540** of the trial impact rod assembly **504**. When the stud members **538** are received within the bores **536**, the implant trial **514** is correctly aligned with the distal end **540** of the trial impact rod **504**. Alternatively, the bores may be studs and the studs bores.

[0252] Now the discussion will focus on the trial impact rod assembly **504** of FIG. **39**. As seen in the figure, the trial impact rod assembly **504** includes a tubular shaft **542** that couples or transitions to an implant trial extension member **544** at the distal end of the trial impact rod assembly **504**. The implant trial extension member **544** is a planar member that includes the stud members **538** on a planar distal surface **546** of the member **544**. The shaft **512** of the trial tool assembly **502** is configured to be received within an interior space **548** in the tubular shaft **542** and the stud members **538** are configured to be received within the bores **536** on the proximal surface **534** of the implant trial **514**. In this arrangement, when the shaft **512** of the trial tool assembly **502** is fully received within the tubular shaft **542** of the trial impact rod assembly **504**, the proximal surface **534** of the implant trial **514** and the distal surface **546** of the implant trial extension member **544** abut each other. The implant trial extension member **544** acts as a natural extension of the implant trial **514** such that when the implant trial **514** is delivered into a patient's joint, the distal end **540** of the trial impact rod assembly **504** may also be delivered into the joint space without stoppage. Stated differently, the implant trial extension member **544** includes top and bottom surfaces **550**, **552** and opposite side surfaces **554** that align with and provide a smooth transition between (i.e., coplanar) the top, bottom, and opposite side surfaces **516**, **518**, **520** of the implant trial **514**. Alternatively, implant trial extension member **544** may have a transition which intentionally

interferes with a bone of the joint in order to act as a stop. The stop feature may be adjustable or fixed.

[0253] At a mid-portion **570** of the trial impact rod assembly **504**, a screw-lock **572** is rotatably coupled to the tubular shaft **542** and configured to frictionally lock or support the shaft **512** of the trial tool assembly **502** when the shaft **512** is received within the tubular shaft **542** of the trial impact rod assembly **504**. The screw-lock **572** may function to lock the shaft **512** in place in many ways. For example, the screw-lock **572** may rotationally advance on a pair of threaded push-locks (not shown) that extend through the tubular shaft **542** such that when the screw-lock **572** is rotationally engaged over the push-locks, the push-locks are caused to extend further through the tubular shaft **542** and into contact with the shaft **512** of the trial tool assembly **502**. Such contact with the shaft **512** of the trial tool assembly **502** may cause sufficient friction to securely support the positioning of the shaft **512** within the tubular shaft **542**.

[0254] Also as seen in FIG. **39**, a proximal end **556** the trial impact rod assembly **504** includes a handle engagement mechanism **558** that includes a pair of block-like members **560** with four generally perpendicular sidewalls **562** separated by mid-section member **564** with four slightly concave sidewalls **566** that are generally coplanar with a pair of corresponding sidewall **562** of the pair of block-like members **560**. The handle engagement mechanism **558** is configured to be received and secured within a distal opening **568** in the handle assembly **506**. The distal opening **568** extends to a cavity **586** for housing and securing of the handle engagement mechanism **558**.

[0255] Moving on, reference is made to the cutting tool **508** in FIG. **39**. As seen in the figure, the tool **508** includes a shaft **590** that is coupled to the cutting element **524** at a distal end **592** of the cutting tool **508**. The cutting element **524** is a planar member with generally parallel opposite sides and a top surface **598** that extends outward and distally from an outer surface **594** of the shaft **590**. The cutting element **524** includes a series of teeth **596** on the top surface **598** of the cutting element **524**. The cutting element in this embodiment is similar to as described in reference to FIGS. **36**A-**36**B. Alternatively, the cutting element **524** may be as described in other portions of this disclosure. For example, the cutting element **524** may include a box chisel, serrated knife blade, etc.

[0256] The shaft **590** of the cutting tool **508** is tubular and includes an internal passageway **600** that is configured to receive the shaft **512** of the trial tool assembly **502**. When the shaft **512** is fully received within the tubular shaft **590** of the cutting tool **508**, the cutting element **524** or, more particularly, a bottom surface **602** and a portion of opposite sidewall surfaces **604** of the cutting element **524** are guided by and positioned within the channel **522** on the top surface **516** of the implant trial **514**. The cutting tool **508** may include a protrusion (not shown) on the internal passageway **600** of the shaft **590** that is configured to engage with and be guided by the shaft channel **530** of the trial tool assembly **502**. When the implant trial **514** is delivered into a joint of a patient, a distal stroke of the cutting element **524** relative to the implant trial **514** is configured to make a keel-cut perpendicular to a plane defined by the joint for the subsequent delivery of an implant having matching keels or wing members.

[0257] Referring to a proximal end **606** of the cutting tool **508**, the shaft **590** is coupled or transitions to a handle engagement mechanism **608** that is similar to the mechanisms **558** on the trial impact rod assembly **504**. The handle engagement mechanism **608** includes a pair of block-like members **610** with four generally perpendicular sidewalls **612** separated by a smaller mid-section member **614** with four slightly concave sidewalls **616** that are generally coplanar with a pair of corresponding sidewall **612** of the pair of block-like members **610**. The handle engagement mechanism **608** is configured to be received and secured within the distal opening **568** in the handle assembly **506**. As stated previously, the distal opening **568** extends to the cavity **586** for housing and securing of the handle engagement mechanism **608**.

[0258] Referring to the handle assembly **506** in FIG. **39**, the assembly **506** includes a coupler **574** that is configured to receive and support the handle engagement mechanisms **558**, **608** on the trial impact rod assembly **504** and the cutting tool **508** within the distal opening **568**. The coupler **574** includes a cylindrical sidewall **576** and a flat impact plate **578** that is opposite the distal opening **568** and configured to be struck with a hammer, mallet, or similar device in order to distally drive the joint preparation tool assembly **500** within a joint. Extending from and attached to the cylindrical sidewall **576** is a shaft **580** that further extends to a handle **582**.

[0259] Still referring to the handle assembly **506** of FIG. **39**, the coupler **574** includes a camming mechanism **584** that is configured to securely support the trial impact rod assembly **504** or the cutting tool **508** when the proximal end of the assembly **504** or tool **508** is positioned within the cavity **586** of the handle assembly **506**. The camming mechanism **584** includes a handle **588** that transitions to a camming head having a cam-shaped surface. The camming head is coupled to the coupler **574** by an axle that extends through an aperture in the cylindrical sidewall **576** and is configured such that when the camming head is rotated about the axle, the cam-shaped surface contacts and locks against one of the concave sidewalls **566**, **616** that is positioned adjacent the aperture. When the camming head is rotated in an opposite direction, the cam-shaped surface disengages with the concave sidewalls **566**, **616** such that the trial impact rod assembly **504** or the cutting tool **508** may be removed from the cavity **586** in the coupler **574**.

[0260] Reference is now made to FIGS. **40**A-C, which are isometric views of the trial tool assembly **502** and the trial impact rod assembly **504** coupling together. As seen in FIG. **40**A, the tubular shaft **542** of the trial impact rod assembly **504** is coaxially aligned with the shaft **512** of the trial tool assembly **502** such that the shaft **512** may be received within the interior space **548** of the tubular shaft **542**. In this arrangement, as seen in FIG. **40**B, which is a close-up view of the engagement of the implant trial **514** with the distal end **540** of the trial impact rod assembly **504**, the stud members **538** on the trial impact rod **504** are aligned and configured to be received within the bores **536** on the proximal surface **534** of the implant trial **514**. As seen in FIG. **40**C, once the trial tool assembly **502** is received within the trial impact rod assembly **504**, the screw-lock **572** may be rotationally engaged to frictionally support the shaft **512** of the trial tool assembly **502**, which, in turn, securely supports the positioning of the trial tool assembly **502** relative to the trial impact rod assembly **504**.

[0261] Reference is now made to FIG. **41**, which is an isometric view of the trial impact rod assembly **504** and the

trial tool assembly **502** coupled together with the handle assembly **506** in close proximity. As seen in the figure, the handle engagement mechanism **558** is positioned to be received within the distal opening **568** in the handle assembly **506**. Also, a guidewire **618** is positioned to be received within the channel **522** on the top surface **516** of the implant trial **514**. After being received within the channel **522**, the guidewire **618** may be further received within and guided by the shaft channel **530** in the shaft **512** of the trial tool assembly **502**. In this way, the guidewire **618** may be delivered into a joint of a patient and the assembly **500** including the impact rod assembly **504** and the trial tool assembly **502** may be delivered into the joint via the guidewire **618** being received within the channel **522**. Once the handle assembly **506** is coupled to the trial impact rod assembly **504**, a mallet may be used to impact the handle assembly **506** in order to sufficiently drive the distal end **510** of the trial tool assembly **502** into the joint. And, once the implant trial **514** is sufficiently delivered within the joint space, the handle assembly **506** may be decoupled with the trial impact rod assembly **504**. Next, the screw-lock **572** on the trial impact rod assembly **504** may be loosened so that the assembly **504** may be slidably removed from the trial tool assembly **502**, which remains within the joint space. At this point, the guidewire **618** may be removed. Alternatively, the guide wire may be removed at any time during the procedure.

[0262] Reference is now made to FIGS. **42**A-**42**B, which are isometric views of the trial tool assembly **502** and the cutting tool **508** coupling together. As seen in FIG. **42**A, the shaft **512** of the trial tool assembly **502** is coaxially aligned with and configured to be received within the internal passageway **600** of the shaft **590** of the cutting tool **508**. The cutting element **524** is aligned with and guided by the channel **522** on the top surface **516** of the shaft **512** as the cutting tool **508** is distally advanced relative to the trial tool assembly **502**. That is, the bottom surface **602** and a portion of the opposite sidewall surfaces **604** are fitted and guided within the channel **522** such that rotation of the cutting tool **508** relative to the trial tool assembly **502** is restricted.

[0263] As seen in FIG. **42**B, once the trial tool assembly **502** is coupled with the cutting tool **508**, the handle assembly **506** may be coupled with the handle engagement mechanism **608** on the cutting tool **508**. The handle assembly **506** may be struck with a mallet in order to distally drive the cutting element **524** relative to the implant trial **514** in order to make a keel-cut transverse to the joint. The cutting tool **508** may be distally driven relative to the implant trial **514** until a distal edge **620** of the shaft **590** abuts the proximal surface **534** of the implant trial **514**. At this point, the distal end **592** of the cutting element **524** is positioned at the distal tip **526** of the implant trial **514**.

[0264] Once the keel-cut has been made, the handle assembly **506** and the cutting tool **508** may be decoupled from the trial tool assembly **502** (either together or individually). Then, the trial tool assembly **502** may be removed from the joint space for subsequent delivery of an implant that matches the space that was cleared by the implant trial **514** and the cutting tool **508**.

[0265] While the joint preparation tool assembly **500** as described in the previous figures includes an implant trial **514** with a single channel **522** and a cutting tool **508** with a single cutting element **524**, the assembly **500** may include implant trials **514** and cutting tools **508** with multiple channels **522** and cutting elements **524**. For example, a certain joint preparation tool assembly **500** may include an implant trial **514** with channels **522** on a top and bottom surface **516**, **518** and a cutting tool **508** with cutting elements **524** on opposite sides of the shaft **590** such that the assembly **500** may deliver simultaneous, dual keel-cuts into a joint space (e.g., into both sacrum and ilium). As another example, a certain joint preparation tool assembly **500** may include an implant trial **514** with a pair of channels **522** on both a top and a bottom surface **516**, **518** and a cutting tool **508** with a pair of cutting elements **524** on opposite sides of the shaft **590** in order to make quad keel-cuts into the bones defining the sacroiliac joint space to make way for an implant having an I-beam shape as described in U.S. patent application Ser. No. 14/447,612, mentioned previously, and hereby incorporated by reference in its entirety. Other embodiments of the assembly **500** are contemplated and within the scope of the present disclosure.

[0266] As further examples of alternative configurations of the implant trial **514** and cutting element **524**, reference is made to FIGS. **43**A-**43**D, which are respective front views of implant trials **514** with various configurations of cutting elements **524** channels **522**. As seen in FIG. **43**A, the channel **522** is formed by one of the side surfaces **520** that extends from the proximal end **528** of the implant trial **514** to the distal end **510** of the trial tool assembly. The channel **522** includes a neck portion **622** and a bulb-end portion **624** that is wider than the neck portion **622**. In this way, once the cutting element **524** is received within the channel **522**, the cutting element **524** is restrained from movement out of the channel **522** except by distal-proximal translation of the cutting element **524** relative to the implant trial **514**.

[0267] Regarding the cutting element **524**, it includes an implant trial engagement end **626** and a cutting end **628**. The engagement end **626** includes a neck member **630** that extends to a bulb-member **632** that is slidingly and matingly received within the channel **522** by distally translating the cutting element **524** such that the engagement end **626** of the cutting element **524** is engaged and fitted within the channel **522** at the proximal end **528** of the implant trial **514**. The channel **522** described herein may include additional mechanisms to restrain the cutting element **524** during distal-proximal translation. The description of a channel **522** having a neck portion **622** and a bulb portion **624** is illustrative and not intended to be limiting.

[0268] Regarding the cutting end **628** of the cutting element **524**, as seen in FIG. **43**A, the cutting end **628** transitions generally ninety degrees from the implant trial engagement end **626** and extends generally parallel with the side surface **520** of the implant trial **514**. In particular, the cutting end **628** terminates in a cutting tip **634** that extends beyond the top surface **516** of the implant trial **514**. In this way, as the cutting element **524** is distally translated, the patient's bone (e.g., sacrum or ilium) that abuts the top surface **516** of the implant **514** will be cut.

[0269] Referring to FIG. **43**B, the cutting element **524** may be a T-shaped member and include a pair of cutting tips **634** where one cutting tip extends beyond the top surface **516** and one cutting tip extends beyond the bottom surface **518** of the implant trial **514**. In this arrangement, the cutting element **524** may be used to deliver simultaneous cuts into opposing bones defining a joint (e.g., sacrum and ilium). And, referring to FIG. **43**C, the cutting element **524** may include two T-shaped members wherein one T-shaped mem-

ber is on each side surface **520** of the implant trial. In this arrangement, the cutting element **524** may be used to deliver dual-keel cuts into each of the sacrum and ilium. Such cuts may be useful for delivery of an implant having a pair of keels that are configured to extend into the sacrum and ilium.

[0270] And, while this discussion has focused on cutting elements **524** with cutting tips **634**, other cutting devices that include a similar implant trial engagement end may be used with the implant trial **514** of the present discussion. For example and as seen in FIG. **43**D, the cutting element **524** includes a T-shaped member with a cutting tip **634** as previously described on one side surface **520** and a box-chisel **636** on the opposite side surface **520**. The box-chisel **636** may be useful, for example, to clear the plane of the joint while the T-shaped member with the cutting tips **634** may be useful for cutting into the sacrum and ilium to prepare for the subsequent delivery of a matching implant. Similarly, instead of the box chisel **636** as shown and positioned in FIG. **43**D, a drill guide collar **710** may be positioned and arranged in place of the box chisel; however, the collar would be positioned adjacent the proximal surface of the implant trial as in FIG. **44** by aligned with one or both opposite side surfaces **520**. In an aspect, the drill guide collar may have a slot like configuration similar to the collar shown in FIGS. **47**A and **47**B except that the slot length is positioned near the implant trial opposite side surface **520** as just described regarding the drill guide collar **710** in place of the box chisel of FIG. **43**D. In an aspect with the slot length parallel to the implant trial opposite surface **520**, a milling cutter bit may be passed immediately adjacent surface **520** while sweeping in a plane generally parallel to the surface **520** and in doing so the milling bit may be caused to project beyond top and bottom surfaces of the implant trial—effectively preparing a cut similar to that prepared by the cutting end **628** of FIG. **43**B. In yet another aspect, a guide collar including a slot aperture may align a milling bit with an opposite surface **520** yet the slot length may extend generally perpendicularly away from the surface **520**, thereby permitting preparation along the joint plane by safely milling from a reference surface **520** and perpendicularly directing the motion of the bit away from the surface **520** (e.g., the other opposite surface **520** may be facing the sciatic notch).

[0271] These are only some versions of alternative embodiments of the implant trial **514** and cutting element **524** that are applicable to all joint preparation tools described herein. Other arrangements of channels **522** on different surfaces of the implant trial **514** are possible and contemplated herein. Additionally and alternatively, the implant trial **514** and cutting element **524** described in reference to FIGS. **43**A-**43**D may include other features described in reference to the previous embodiments. For example, the implant trial **514** of the present embodiment may additionally include a cutting element as described previously that extends over the top surface of the implant trial. Also, the cutting element **524** of the present embodiment may include a cutting element guide as described previously that is configured to fit within a reciprocally shaped opening in the implant trial.

4. Trial Fit Assembly and Cutting Tool with Drill Guiding System

[0272] Turning now to FIGS. **44**-**47**, reference is made to an additional embodiment of a joint preparation tool assembly **700**. As seen in FIG. **44**, the joint preparation tool assembly **700** includes a trial tool assembly **702**, a drill guide **704**, and a handle assembly **706**.

[0273] In one aspect, the joint preparation tool assembly **700** is configured to guide a drill bit **708** during distal-proximal translation of the drill bit **708** relative to the drill guide **704** and trial tool assembly **702**. In particular, the drill guide **704** is similar to as described previously with respect to the various embodiments of the cutting tool, except that the drill guide **704** includes a guide collar **710** at a distal end **712** of the drill guide **712** as opposed to a cutting element. The guide collar **710** is a tubular member that is positioned to guide the drill bit **708** above a channel **714** formed in a top surface **716** of an implant trial **718**, which is located at a distal end **720** of the trial tool assembly **702**, when the distal end **712** of the drill guide **704** abuts a proximal end **722** of the implant trial **718**.

[0274] As seen in FIG. **44**, the handle assembly **706** is releasably secured to a proximal end **724** of a shaft **726** of the trial tool assembly **702**. The handle assembly **706** includes drill shank guide **728** that is formed within a body **730** of the handle assembly **706** and is configured to receive and guide a drill bit shank **732** during distal-proximal translation of the drill bit **708**. The drill shank guide **728** is a cylindrical or partially cylindrical opening or cutout that is sized slightly larger than a diameter of the drill bit shank **732**. In this way, as the drill bit shank **732** is translated distal-proximal a distal end **734** of the drill bit **708** is guided to be received within, and further guided by, an internal passageway **736** defined within the guide collar **710**.

[0275] Moving on to FIG. **45**, reference is made to the various components of the joint preparation tool assembly **700** in an uncoupled state. As seen in the figure, the drill guide **704** is similar to previously described embodiments of the cutting tool in that it includes a pair of collars **738** with protrusions **740** extending radially inward from inner walls **742** of the collars **738**. The protrusions **740** are configured to fit within and be guided by a groove **744** formed within the shaft **726** of the trial tool assembly **702**. The drill guide **704** additionally includes a drill guide element **746** at distal end **712** of the drill guide **704** that is configured to slidingly engage with and be guided by a reciprocally shaped opening **748** formed within the implant trial **718**.

[0276] Turning now to FIG. **46**, reference is made to the various components of the joint preparation tool assembly **700** in a coupled state. As seen in the figure, the drill bit **708** may include a stop feature **750** that limits a depth that the distal end **734** of the drill bit **708** may distally extend relative to the implant trial **718**. The stop feature **750** may be permanently fixed (e.g., welded) or may be adjustable based on the needs of a particular surgical procedure.

[0277] In operation, the joint preparation tool assembly **700** may function as follows. The trial tool assembly **702** may be delivered into the sacroiliac joint of a patient with or without guidance by a guide wire. The drill guide **704** may be slidingly engaged with the shaft **726** of the trial tool assembly **702** by fitting the proximal end **724** of the shaft **726** within and through the collars **738** such that the protrusions **740** (not shown in FIG. **46**) are fitted within the groove **744** of the shaft **726**. The drill guide **704** may be translated distally while being guided by the collars **738** of the trial tool assembly **702**. As the drill guide **704** approaches the implant trial **718**, the drill guide element **746** will engage with, and be further guided by, the reciprocally shaped opening **748** formed in the implant trial **718**. The drill

guide **704** will continue its distal translation until the distal end **712** of the drill guide **704** abuts the proximal end **722** of the implant trial **718**. At this point, the guide collar **710** is adjacent the channel **714** on the top surface **716** of the implant trial **718**.

[0278] Next, the drill bit **708** or, more particularly, the drill bit shank **732** may be fitted within the drill bit shank guide **728** in the handle assembly **706**. The drill bit **708** may then be distally advanced while being guided by the drill bit shank guide **728** until the distal end **734** of the drill bit **708** engages with and is caused to enter the internal passageway **736** of the guide collar **710**. At this point the drill bit **708** may be further distally advanced to deliver a bore into a patient's bone or cartilage while being guided by the collar **710** on the drill guide **704** and by the drill bit shank guide **728** on the handle assembly **706**.

[0279] Reference is now made to FIGS. **47**A-**47**B, which are alternative configurations for the guide collar **710**. As seen in FIG. **47**A, the guide collar **710** may include generally parallel sidewalls **752** that are generally perpendicular to a lower collar wall **754**. Defined between the sidewalls **752** and the lower collar wall **754** is a slot or opening **756** that is open on a top side **758**. Thus, as the drill bit **708** is distally translated relative to the guide collar **710**, the sidewalls **752** prevent the drill bit **708** from angling laterally in a direction towards one of the side surfaces of the implant trial **718**. The drill bit **708**, however, is free to angle towards or away from the top surface **716** of the implant trial **718**. In this way, the drill bit **708** (i.e., with a drill bit configured for milling) may be used to mill or machine a portion of a patient's bone that abuts the top surface **716** of the implant trial **718**.

[0280] The guide collar **710** of FIG. **47**B is similar to the collar of FIG. **47**A, except that the guide collar **710** in FIG. **47**B includes a top wall member **760** on the top side **758** of the guide collar **710**. In this way, the guide collar **710** restrains the movement of the drill bit **708** as it angles away from the top surface **716** of the implant trial **718**. Otherwise, the guide collar **710** functions very similarly to the collar of FIG. **47**A. It is noted that a proximal opening **762** on the guide collar **710** may be sized larger than the drill bit **708** a particular amount such that the drill bit **708** may be angled slightly downward towards the implant trial **718**. The exact size of the opening **762** may be chosen such that the drill bit **708** can angle somewhat downward towards the top surface **716** of the implant trial **718** without contacting the top surface **716**.

[0281] Other mechanisms are possible to guide the drill bit **708** during distal-proximal movement in drilling or milling a patient's bone. The aforementioned embodiments are merely exemplary and are not intended to be limiting. Additionally and alternatively, the trial tool assembly **702** and drill guide **704** discussed in the present embodiment may include features described in previous embodiments. For example, while not discussed previously, the drill guide **704** may include an alignment guide that is similar to the cutting guide element discussed previously. The alignment guide may extend distally from the guide collar **710** and be received within a reciprocally shaped opening in the implant trial **718**.

III. Methods of Preparing the Sacroiliac Joint for Fusion

[0282] The following discussion will focus on various methods of preparing a sacroiliac joint for a surgical fusion procedure utilizing the tools and devices discussed previously. While the discussion focuses on fusing the sacroiliac joint, the methods discussed herein are not limiting; rather, the methods are applicable to the preparation of other joints as well.

A. Preoperative Planning for a Surgical Fusion Procedure

[0283] Prior to any joint preparation, a surgeon or other medical person may select a suitable procedure to fuse the sacroiliac joint. The procedure may include fusing the joint with or without delivering an implant in the joint space. If the surgeon selects a procedure involving delivery of an implant within the joint space, the surgeon will select an implant configuration for delivery into the sacroiliac joint of the patient based on preoperative or intraoperative data. The data may be the result of post-processing of raw or other imaging data (e.g. CT or MRI DICOM files). The post-processing may include the use of a software program (e.g., 3DSLICER available from http://www.slicer.org) that may be used for medical image processing and 3D visualization of image data. Other data may include the patient's weight, activity level, and general health.

[0284] The preoperative or intraoperative data may assist in the planning and selecting of desirable anchor trajectories (e.g., starting and stopping points on patient's soft tissue and near or within bone tissue), anchor dimensions (e.g., length, diameter, head size, washer, thread pitch), implant types and dimensions, and joint preparation tool types, dimensions, and configurations. A particularly system for preparing and fusing the sacroiliac joint may be selected, for example, for a hypermobile joint, which may include an implant or fusion system that is resistant to the expected forces present at that particular patient's sacroiliac joint. The determination of fixation sufficiency may be calculated based on the patient's data and also on the performance results of various bench and/or finite element analysis ("FEA") tested implant assembly configurations. For example, a calculated anchor and/or implant trajectory may be considered and determined from certain patient imaging and post-processing data with an overlayed implant assembly. Further, the implant assembly footprint within the joint plane may be selected as a lower percent of total joint surface to permit sufficient boney fusion across the joint while maintaining a sufficient implant sacral and iliac face surface area to prevent implant subsidence.

[0285] Specific measurements and characteristics of the patient's anatomy may influence the selection of a particular joint fusion system. For example, the patient's bone density may be measured at numerous locations in proximity to and surrounding the elements of the implant assembly. Lower bone density (e.g., osteopenia, osteoporosis) corresponding to a T-score lower than −1, sacroiliac joint instability, or hypermobility may require the use of an implant assembly with a greater amount of keel (i.e., the material cross section as defined by thickness of the keel and its length along implant longitudinal axis and also keels extending a greater distance into both bones defining the sacroiliac joint) and anchor extending across the sacroiliac joint and into the ilium and sacrum. Additionally, the relative angles between the implant longitudinal axis and anchor or anchors, and also the relative angles between multiple anchors (e.g., parallel, divergent, convergent) may be preselected based on the patient's anatomy.

[0286] A comparison of the preoperative or intraoperative data (e.g., sacroiliac joint surface area, joint mobility, load-

ing, bone density, desirable anatomic pathways) and the selected implant assembly and joint preparation tools may be conducted to ensure or validate compatibility before the manufacture ships the implant system and/or before the surgeon employs the system in a surgical procedure. After implant assembly and preparation tools validation, the selected assemblies may be shipped to the surgeon and the surgeon may proceed with the surgical fusion procedure utilizing the selected assemblies.

B. Fusion of the Sacroiliac Joint via Implant Delivery

[0287] In order to fully understand the steps to prepare the sacroiliac joint for a fusion procedure, this section will detail one, among many, methods of fusion a sacroiliac joint for which the preparation tools discussed herein may be beneficial. To begin, reference is made to FIGS. **48**A-**48**B, which depict various bone landmarks adjacent, and defining, the sacroiliac joint **1000** of a patient **1001**.

[0288] Reference is first made to FIG. **48**A, which is a right lateral view of a hip region **1002** of a patient **1001** lying prone, wherein the soft tissue **1003** surrounding the skeletal structure **1006** of the patient **1001** is shown in dashed lines. Delivery of an implant into the sacroiliac joint **1000** and, thus, preparing of the joint **1000** for delivery of the implant are via a posterior approach to the hip region **1002**. FIG. **48**B, which is an enlarged view of the hip region **1002** of FIG. **48**A, depicts a lateral view of the patient's hip region **1002** reveals certain features of the ilium **1005**, including the anterior superior iliac spine **2000**, the iliac crest **2002**, the posterior superior iliac spine **2004**, the posterior inferior iliac spine **2006**, the greater sciatic notch **2008** extending from the posterior inferior iliac spine **2006** to the ischial spine **2010**, and the tubercle of iliac crest **2012**.

[0289] The sacroiliac joint articular region **1044** is shown in dashed lines. A posterior inferior access region **2016** of the sacroiliac joint articular region **1044** has a superior end **2018** on the sacroiliac joint line **2019** that is between approximately 0 mm and approximately 40 mm inferior the posterior inferior overhang **2020** of the posterior superior iliac spine **2004**. The posterior inferior access region **2016** of the sacroiliac joint articular region **1044** has an inferior end **2022** on the sacroiliac joint line that is at approximately the intersection of the posterior inferior iliac spine **2006** with the lateral anterior curved boundary **2024** of the sacrum **1004**. In other words, the posterior inferior access region **2016** of the sacroiliac joint articular region **1044** has an inferior end **2022** on the sacroiliac joint line that is at approximately the superior beginning of the greater sciatic notch **2008**.

[0290] Still referring to FIG. **48**B, the sacroiliac joint articular region **1044** roughly defines an L-shape that includes a caudal region **1086** and a cranial region **1087**. Access into the caudal region **1086** of the sacroiliac joint is via the posterior inferior access region **2016** that extends between corners defined by the superior end **2018** and the inferior end **2022**. Access into the cranial region **1087** may be accomplished by continual, anterior travel in the caudal region **1086** until the articular region **1044** turns superiorly into the cranial region **1087**.

[0291] To begin a discussion of implant delivery into the sacroiliac joint articular region **1044**, reference is made to FIG. **48**C, which is a close-up lateral side view of the hip region **1002** of a patient **1001** with a nearest ilium **1005** removed in order to show the sacroiliac joint boundary **3000** defined along the sacrum **1004** and outlining the sacroiliac joint articular region **1044**, and an implant **25** positioned for implantation within the sacroiliac joint articular region **1044**.

[0292] As seen in FIG. **48**C, boundaries along the sacroiliac joint articular region **1044** include an inferior boundary segment **3002**, an anterior boundary segment **3004**, a superior boundary segment **3006**, and a posterior boundary segment **3008**. The inferior boundary segment **3002** is immediately adjacent, and extends along, the sciatic notch **2024**.

[0293] The inferior boundary segment **3002** and anterior boundary segment **3004** intersect to form an anterior-inferior corner **3010**. The anterior boundary segment **3004** and superior boundary segment **3006** intersect to form an anterior-superior corner **3012**. The superior boundary segment **3006** and posterior boundary segment **3008** intersect to form a superior-posterior corner **3014**. The posterior boundary segment **3008** and posterior inferior access region **2016** intersect to form a superior-posterior corner **3016** of the posterior inferior access region **2016**. The inferior boundary segment **3002** and posterior inferior access region **2016** intersect to form an inferior-posterior corner **3018** of the posterior inferior access region **2016**.

[0294] The inferior boundary segment **3002** extends between corners **3010** and **3018**. The anterior boundary segment **3004** extends between corners **3010** and **3012**. The superior boundary segment **3006** extends between corners **3012** and **3014** and provides an access into the cranial portion **1087** of the sacroiliac joint. The posterior boundary segment **3008** extends between corners **3014** and **3016**. The posterior inferior access region **2016** extends between corners **3016** and **3018** and provides an access into the caudal region **1086** of the sacroiliac joint. The posterior boundary segment **3008** separates articular region **1044** and extra-articular region **3007**, which includes the sacral fossa on the sacrum **1004** and the corresponding iliac tuberosity on the ilium **1005** and defined by the extra-articular region boundary **3009**.

[0295] In one aspect and as seen in FIG. **48**C, the implant **25** may be delivered via an implant arm **111** of a delivery tool into the caudal region **1086** of the sacroiliac joint articular region **1044**. As shown via the implant **25** and implant arm **110** shown in solid lines, in one embodiment, the implant **25** enters the posterior inferior access region **2016**, and is further advanced into the caudal region **1086** of the sacroiliac joint articular region **1044**, in an orientation such that the implant arm **110** and wide planar members **51** are in the joint plane and the longitudinally extending edge **3050** of the wide planar member **51** next to the inferior boundary segment **3002** is generally parallel to, and immediately adjacent to, the inferior boundary segment **3002**. Thus, the distal end **43** of the implant is heading generally perpendicular to, and towards, the anterior boundary segment **3004**.

[0296] As shown in FIG. **48**C via the implant **25** and implant arm **110** shown in dashed lines, in one embodiment, the implant **25** enters the posterior inferior access region **2016**, and is further advanced into the caudal region **1086** of the sacroiliac joint articular region **1044**, in an orientation such that the implant arm **111** and wide planar members **51** are in the joint plane and the longitudinally extending edge **3050** of the wide planar member **51** next to the inferior boundary segment **3002** is somewhere between being generally parallel to the inferior boundary segment **3002** (as

illustrated by the solid-lined implant **25** in FIG. **48**C) or forming an angle AJ with the inferior boundary segment **3002** of up to approximately 50 degrees. Thus, the distal end **43** of the implant shown in dashed lines can be said to head anywhere from generally perpendicular to, and towards, the anterior boundary segment **3004** to heading generally towards the superior-anterior corner **3012**, or points in between.

[0297] In one embodiment, the implant **25** may be first directed into the joint space as illustrated by the solid-lined implant **25** in FIG. **48**C after which the implant **25** is rotated within the joint space to be positioned somewhere between, and including, angled position depicted by the dashed-lined implant **25**. In other embodiments, the implant **25** may be first directed into the joint space as illustrated by the dashed-lined implant **25** in FIG. **48**C after which the implant **25** is rotated within the joint space to be positioned somewhere between, and including, the parallel position depicted by the solid-lined implant **25**. Thus, an implant **25** may be delivered non-transversely (i.e., within the joint and not across the joint) into the caudal region **1086**, the cranial portion **1087**, or partially within each of the caudal and cranial regions **1086**, **1087** of the sacroiliac joint articular region **1044**. Further details of the implant delivery can be found in related applications, mentioned previously, such as U.S. patent application Ser. No. 12/998,712, which is incorporated by reference herein in its entirety.

C. Utilization of the Tools and Assemblies Described Herein to Prepare the Sacroiliac Joint for Fusion

[0298] Now that an overview of the relevant anatomical landmarks and an example fusion procedure has been described, the discussion may now focus on preparing the sacroiliac joint for a fusion procedure. In doing so, reference will be made to FIGS. **49**A-**49**D, among additional figures, which are steps in the methodology and illustrated in the same transverse cross section taken in along a plane extending medial-lateral and anterior posterior. In this cross section, articular surfaces **1016** are covered by a thick layer of articular cartilage with a joint space existing between them, the FIGS. **49**A-**49**D are simplified for illustrative purposes and do not show these features to scale.

[0299] Now referring primarily to FIG. **49**A, an embodiment of the method can include the step of placing a patient under sedation prone on a translucent operating table (or other suitable surface). The sacroiliac joint **1000** can be locally anesthetized to allow for injecting a radiographic contrast **1046** (as a non-limiting example, Isoview 300 radiographic contrast) under fluoroscopic guidance into the inferior aspect of the sacroiliac joint **1000** to outline the articular surfaces **1016** of the sacroiliac joint **1000**) defined between the sacrum **1004** and ilium **1005**, the sacroiliac joint **1000** having an interarticular region **1044**. Injection of the radiographic contrast **1046** within the sacroiliac joint **1000** can be accomplished utilizing a tubular member **1047** (e.g., a syringe needle) having first tubular member end **1048** which can be advanced between the articulating surfaces **1016** of the sacroiliac joint **1000** and having a second tubular member end **1049** which removably couples to a hub **1050**. The hub **1050** can be configured to removably couple to a syringe barrel **1051** or other device to contain and deliver an amount of radiographic contrast **1046**. In the example of a syringe barrel **1051**, the syringe barrel **1051** can have an internal volume capable of receiving an amount of the radiographic contrast **1046** sufficient for outlining the articular surfaces **1016** of the sacroiliac joint **1000**, for example, under lateral fluoroscopy. A plunger **1052** can be slidingly received within the barrel **1051** to deliver the radiographic contrast **1046** through the tubular member **1047** into the sacroiliac joint **1000**. The tubular member **1047** can have a gauge in the range of about 16 gauge and about 20 gauge and can further be incrementally marked on the external surface to allow determination of the depth at which the first needle end **1048** has advanced within the sacroiliac joint **1000**. As the first needle end **1048** advances into the sacroiliac joint **1000** the radiographic dye **1046** can be delivered from within the syringe barrel **1051** into the sacroiliac joint **1000** to allow visualization of the sacroiliac joint **1000** and location of the tubular needle **1047** within the sacroiliac joint **1000**.

[0300] Now referring primarily to FIG. **49**B, once the first tubular member end **1048** has been sufficiently advanced into the sacroiliac joint **1000** and the articular surfaces **1016** of the sacroiliac joint **1000** have been sufficiently visualized, the hub **1050** can be removed from the tubular member **1047** leaving the tubular member **1047** fixed within the sacroiliac joint **1000** as an initial guide for tools subsequently used to locate or place the sacroiliac joint implant non-transversely between the articulating surfaces **1016** of the sacroiliac joint **1000** (e.g., locate the implant non-transversely to the joint plane **1030** generally defined by the articulating surfaces **1016** of the interarticular region **1044** of the sacroiliac joint **1000**) or in removal of a portion of the sacroiliac joint **1000** within the region defined by the articular surfaces **1016** to generate an implant receiving space **1029**. Alternately, one or more guide pins **1013** can be inserted along substantially the same path of the tubular member **1047** for fixed engagement within the sacroiliac joint **1000** and used in subsequent steps as a guide(s).

[0301] Now referring primarily to FIG. **49**C, a small incision **1053** can be made in the skin at the posterior superior, or as to certain embodiments inferior, aspect of the sacroiliac joint **1000**, extending proximal and distal to the tubular member **1047** along the line of the sacroiliac joint **1000** to provide a passage to access the interarticular space between the articulating surfaces **1016** (see FIG. **49**B) of the sacroiliac joint **1000**. More specifically, the small incision **1053** can be made along the joint line of the sacroiliac joint **1000** in the tissue covering the posterior inferior access region **2016** of the sacroiliac joint articular region **1044**. A cannulated probe **1054** can be slidingly engaged with the tubular member **1047** (or guide pin **1013**) extending outwardly from the sacroiliac joint **1000** (while the sacroiliac joint may be shown in the figures as being substantially linear for illustrative purposes, it is to be understood that the normal irregular features of the sacroiliac joint have not been removed). The cannulated probe **1054** can have a probe body **1054** of generally cylindrical shape terminating in a spatulate tip **1055** at the end advanced into the sacroiliac joint **1000**. A removable cannulated probe handle **1056** couples to the opposed end of the probe body **1054**. The spatulate tip **1055** can be guided along the tubular needle **1047** or guide wire **1013** into the posterior portion of the sacroiliac joint **1000** and advanced to the anterior portion of the sacroiliac joint **1000** under lateral fluoroscopic visualization. The cannulated probe handle **1056** can then be removed providing the generally cylindrical probe body

1054 extending outwardly from the sacroiliac joint **1000** through the incision **1053** made in the skin.

[0302] Alternatively, the probe **1054** can be used to guide, advance or place a needle, guide wire or other instrument up to, near, or into the joint.

[0303] Additionally, in particular embodiments, probe handle **1056** or the opposed end of the probe body **1054**, or both, can be configured to have an interference fit or a luer lock hub to communicate with a syringe barrel **1051** in order to advance contrast, in situ curable biocompatible materials, stem cells, or etc. through the cannulated probe **1054** or cannulated probe handle **1056**.

[0304] Now referring primarily to FIG. **49**D, a passage from the incision **1053** (see FIG. **49**C) to the sacroiliac joint **1000** can be generated by inserting a cannula **1057** into the incision. A soft tissue dilator **1058** having a blunt end **1059** can be advanced over the probe body **1054**, or a plurality of soft tissue dilators of increasing size, until the blunt end **1059** of the soft tissue dilator **1058** and the corresponding cannula end contact the posterior aspect of the sacroiliac joint **1000**. More specifically, in one embodiment, the ends of the dilator **1058** and cannula **1057** contact the joint line **2019** of the sacroiliac joint **1000** at the posterior inferior access region **2016** of the sacroiliac joint articular region **1044**. The soft tissue dilator **1058** can be removed from within the cannula **1057**. The external surface of the cannula **1057** can be sufficiently engaged with the surrounding tissue to avoid having the tissue locate with in the hollow inside of the cannula **1057**. A non-limiting embodiment of the cannula **1057** provides a tubular body having substantially parallel opposed side walls which terminate in a radius at both ends (lozenge shape) into which a plurality of different jigs can be inserted. Alternatively, as a non-limiting example, according to particular embodiments, cannula **1057** and corresponding dilators **1058** and alignment jigs **1060** can be configured to have tubular bodies with an elliptical or circular cross section.

[0305] In some embodiments, the cannula **1057** may be additionally configured to have within or near its walls a light source such as, for example, a fiberoptic or a LED light source to assist in visualization of the working area. Also, in some embodiments, irrigation and suction tubing may communicate with the inside passage of cannula **1057**.

[0306] At this stage, additional tools and methods may be employed to provide access to the sacroiliac joint **1000** as described in U.S. patent application Ser. No. 13/475,695 filed May 18, 2012 entitled "SYSTEMS FOR AND METHODS OF FUSING A SACROILIAC JOINT," which is hereby incorporated by reference in its entirety. For example, drill jigs may be further advanced over the probe body **1054** to align a drill or other joint preparation tool. Accordingly, the discussion will now focus on employing the tools and devices described in previous sections of this application.

[0307] In certain embodiments of the method, an amount of articular cartilage or other tissues from between the articular surfaces of the sacroiliac joint **1000** can be removed sufficient to allow embodiments of the sacroiliac joint implant to be implanted in replacement of the removed articular cartilage or tissue. Because the method removes the degenerative articular cartilage or tissue between the articular surfaces of the sacroiliac joint **1000**, the articular surfaces of the sacroiliac joint **1000** can remain intact or substantially intact allowing the sacroiliac joint implant to be non-transversely located between the articular surfaces of the sacroiliac joint **1000**.

[0308] Now referring primarily to FIGS. **49**E-**49**G, a cannula alignment jig **1060** can be advanced over the probe body **1054** (or guide pins **1013**) and received within the cannula **1057**. Substantially, identical cross hairs **1063**, **1064** can be disposed on the upper jig surface **1065** and the lower jig surface **1066**. Alignment of the cross hairs **1063**, **1064** under x-ray with the sacroiliac joint **1000** can confirm that the cannula **1057** has proper orientation in relation to the paired articular surfaces **1016** of the sacroiliac joint **1000**. The cannula **1057** properly oriented with the paired articular surfaces **1016** can then be disposed in fixed relation to the sacroiliac joint by placement of fasteners through the cannula **1057** into the sacrum **1004** or the ilium **1005**.

[0309] Now referring to FIGS. **49**H and **49**I, a first drill jig **1067** can be advanced over the probe body **1054** (or guide pins **1013**) and received within the cannula **1057**. The probe body **1054** (or guide pins **1013**) extending outwardly from the sacroiliac joint **1000** passes through a drill guide hole **1068** of the first drill jig **1067** (or a plurality of guide pins **1013** can extend through a corresponding plurality of guide pin holes **1069**). The drill guide hole **1068** can take the form of a circular hole as shown in the Figures, a slot, or other configuration to restrict the movement of a drill bit **1062** within the drill jig **1067** and provide a guide for a drill bit **1062** in relation to the sacroiliac joint **1000**. Guide pin holes **1069** can receive guide pins which can be positioned between the articular surfaces **1016** of the sacroiliac joint **1000** to demarcate the zone of desired treatment or safe working zones while using, for example, lateral fluoroscopy. As a non-limiting example, a first guide pin **1013** can be advanced through a first guide pin hole **1069**, or alternatively a guide pin **1013** is first inserted into the sacroiliac joint **1000** and subsequently a guide jig **1067** is advanced over the guide pin **1013**, the first guide pin **1013** can enter near inferior end **2022** of the posterior inferior access region **2016** of the sacroiliac joint articular region **1044** via the sacroiliac joint line **2019** to border a portion of the greater sciatic notch **2008** thereby allowing a medical person, computer guided surgical system, or other observer to more easily highlight under x-ray a border which should not be crossed during the procedure due to the presence of nerve and other structures. Additionally, as a non-limiting example, first guide pin **1013** can configured as an electrode, insulated from the operator and the patient's soft tissues, and may be connected to a monitor to signal to an operator or surgeon when implant **12**, configured with a stimulating electrode (NM), e.g., as shown and described in U.S. Provisional Patent Application 61/860,185, comes into contact with first guide pin. Similarly, a second guide pin **1013** can be placed in another guide pin hole **1069** to demarcate a second limit to a desired zone of treatment, or safe working zone. For example, a second guide pin **1013** can enter near the superior end **2018** of the posterior inferior access region **2016** of the sacroiliac joint articular region **1044** via the sacroiliac joint line **2019** to be positioned to border an area of the sacroiliac joint **1000** such as a transition zone between the extra-articular **3007** and the interarticular region **1044** which, for example, has been highlighted by contrast material as above described.

[0310] Referring to FIGS. **49**J-**49**R, a cannula **1057** may be used to facilitate access to the surgical region during a procedure to implant the implant assembly **14** (not shown).

In one embodiment, the cannula **1057** may be used in conjunction with a sacroiliac joint repair procedure via a known surgical access region including, but not limited to, the posterior inferior access region **2016** as illustrated in FIGS. **49**J-**49**R. The cannula **1057** may include a cannula body **1057**H forming a wall enclosing an internal volume **1057**J, which opens to a proximal opening **1057**A and a distal opening **1057**B. Upon insertion of the cannula **1057** within the surgical access region, the internal volume **1057**J may be maintained, thereby functioning as an opening through which surgical instruments, appliances, fasteners, and any other associated surgical equipment or supplies may be inserted or removed and through which the surgical procedure may be visually monitored.

[0311] The outer surface of the cannula body **1057**H may include one or more contoured regions or projections to enhance the close fit of the cannula **1057** between the skeletal structures surrounding the surgical access region **2016**. The outer surface of the body **1057**H may form a cannula sacral contour **1057**C on one side and may additionally form a cannula iliac contour **1057**D on a side opposite to the cannula sacral contour **1057**C. The cannula **1057** may also include a distal projection **1057**E which extends distally beyond the cannula sacral contour **1057**C and may be shaped to fit within a portion of the greater sciatic notch **2008** (see FIG. **49**P). In addition, the outer distal surface of the cannula body **1057**H may form a PSIS contact area **1057**F to enhance the fit of the portion of the cannula **1057** contacting the posterior superior iliac spine (PSIS) **2004** (see FIG. **49**N).

[0312] The cannula body **1057**H may further define one or more additional bores configured to reversibly receive handles and/or fasteners used to situate the cannula within the surgical region and/or to reversibly receive fasteners used to fix the cannula in place within the surgical region during the surgical procedure. The cannula body **1057**H may define a fastener bore **1057**K passing through the cannula body **1057**H from the outer surface into the internal volume **1057**J of the cannula **1057**. The cannula bore may open at one end to a cannula fastener bore proximal opening **1057**G, which may be in communication with the internal volume **1057**J of the cannula **1057**. The cannula bore may also open at an opposite end to a cannula fastener bore distal opening **1057**L which may be further configured to permit a fastener **1057**Z to i) extend generally perpendicular to the cannula PSIS contact area **1057**F; and/or, ii) be in a divergent relation relative to distal projection **1057**E. Furthermore, the cannula **1057** may have a handle **1057**Y extending from the cannula body **1057**H for inserting, removing, and/or otherwise manipulating the cannula **1057** during a surgical procedure. As illustrated in FIG. **49**J, the handle **1057**Y may be reversibly attached to the cannula body **1057** via a handle bore **1057**M formed with the cannula body **1057**H. The handle bore **1057**M may be provided with fastener features including, but not limited to, threads, that may cooperatively engage corresponding fastener features at a distal end **1057**N of the handle **1057**Y in order to implement the reversible attachment of the handle **1057**Y to the cannula **1057**.

[0313] Referring again to FIGS. **49**J to **49**R, a surgical procedure employing the cannula **1057** may be conducted using a method described herein below. A cannula **1057** may be positioned near a sacroiliac joint line **2019** and in an area including the posterior inferior access region **2016** such that the sacroiliac joint line **2019** may be visible and/or accessible via a cannula proximal opening **1057**A, as illustrated in FIG. **49**O. The cannula **1057** may be further positioned to align the distal extension **1057**E with a portion of the greater sciatic notch **2008**, as illustrated in FIG. **49**P. The cannula **1057** may be further positioned to align the cannula PSIS contact area **1057**F with a portion of a posterior superior iliac spine **2004** as illustrated in FIG. **49**N. The cannula **1057** may then be disposed in fixed relation to the sacroiliac joint by placement of fasteners **1057**Z through the cannula **1057** into the sacrum **1004** or the ilium **1005**, as illustrated in FIG. **49**P.

[0314] Reference is now made to FIG. **50**A, which depicts a joint preparation tool **4000** including a tooling head **4002**, as described in FIGS. **9**-**10**, approaching the sacroiliac joint **1000**. The joint preparation tool **4000**, in particular, includes a cutting element **4004** that outwardly extends from a shaft **4006** at the distal end of the tooling head **4002**. The cutting element **4004** includes a sharpened proximal edge **4008** such that a cutting stroke occurs with a proximal retraction of the joint preparation tool **4000**.

[0315] As seen in FIG. **50**A, the joint preparation tool **4000** is oriented relative to sacroiliac joint articular region **1044** such that the outwardly extending cutting element **4004** is positioned parallel to the joint plane **1030**. That is, each of the side walls the cutting element **4004** is oriented between the articular surfaces of the joint **1000** and the proximal edge **4008** is, initially, oriented transversely across the joint plane **1030**. As illustrated in FIG. **50**B, the joint preparation tool **4000** is advanced into the sacroiliac joint articular region **1044** in the previously described orientation.

[0316] Now reference is made primarily to FIG. **50**C, which is a similar view to that of FIG. **48**C, except that instead of an implant being delivered into the sacroiliac joint **1000**, the joint **1000** is being prepared for implant delivery. As seen in the figure, the distal end of the tooling head **4002** may enter the posterior inferior access region **2016** and extend into the caudal region **1086** of the sacroiliac joint articular region **1044**. As an example and as seen by the solid line depiction of the tooling head **4002**, the head **4002** may be delivered into the caudal region **1086** such that the shaft **4006** is generally adjacent and parallel to the inferior boundary segment **3002**. At a sufficient depth, the joint preparation tool **4000** may be rotated within the joint plane (as seen by the broken line depiction of the joint preparation tool **4000**) such that the shaft **4006** angles the cutting element **4004** towards the cranial region **1087** of the articular region **1044**. This and other movements will cause the proximal edge **4008** of the cutting element **4004** to cut into or shear the articular cartilage from the articular surfaces of the sacroiliac joint articular region **1044**.

[0317] As another example of preparing the articular region **1044** once the tool **4000** is positioned within the articular region **1044**, reference is made to FIG. **50**D, which depicts the joint preparation tool **4000** fully in into the articular region **1044** such that the shaft **4006** of the tooling head **4002** is adjacent and parallel to the inferior boundary segment **3002** and the cutting element **4004** is adjacent the anterior-inferior corner **3010**. In this orientation, the cutting element **4004** extends from the shaft **4006** towards the cranial region **1087** of the articular region **1044**. It is noted that insertion of the tool **4000** into the articular region **1044** causes an initial abrasion to the articular cartilage in the portions of the articular region **1044** where the tool **4000** is inserted. To further prepare the articular region **1044**, a force

F1 may be applied to joint preparation tool **4000** in a direction perpendicular to the extension of the shaft **4006** and in a direction towards the cranial region **1087**. As seen in FIG. **50**E, which depicts the joint preparation tool **4000** moved superiorly according to the applied force F1, the cutting element **4004** is now in contact with additional articular cartilage that was not previously abraded by the insertion of the tool **4000** into the articular region **1044**. At this point, a force F2 may be applied proximally on the joint preparation tool **4000**.

[0318] As seen in FIG. **50**F, the force F2 and the proximal retraction of the tooling head **4002** from the articular region **1044** will cause articular cartilage in-line with the cutting element **4004** to be cut or otherwise sheared from the articular surfaces of the articular region **1044** leaving a prepared joint surface **4010**. At this point, the joint preparation tool having a curette-type tooling head may be used to remove the abraded articular cartilage in the joint space by any number of methods.

[0319] The previously mentioned steps may be repeated in order to increase the size of the prepared joint surface **4010** as may be needed for a particular surgical procedure. For example, a joint preparation tool **4000** having a tooling head **4002** with a larger outwardly extending cutting element **4004** may be subsequently used to prepare an even larger joint surface **4010**.

[0320] Now primarily referring to FIG. **51**A, the joint preparation tool **4000** previously described may be used to make keel-cuts generally perpendicularly into the sacrum **1004** and/or the ilium **1005**. As seen in the figure, which is a transverse cross section of the sacrum **1004** and the ilium **1005** taken in along a plane extending medial-lateral and anterior posterior, the joint preparation tool **4000** may be delivered into the sacroiliac joint articular region **1044**, as described previously in FIGS. **50**A-**50**B, such that the cutting element **4004** extends from the shaft **4006** of the tooling head **4002** parallel to the joint plane **1030**. In this orientation, the proximal edge **4008** of the cutting element **4004** extends across the joint plane **1030**. Once the joint preparation tool **4000** is at a sufficient depth within the articular region **1044**, as seen in FIG. **51**A, the shaft **4006** of the tool **4000** may be rotated such that the cutting element extends within either the sacrum **1004** or the ilium **1005** (cutting element extends within ilium **1005** in FIG. **51**A) and is oriented perpendicular to the joint plane **1030**. Next, a force F3 may be proximally applied (e.g., via a slap hammer assembly) to the joint preparation tool **4000** such that the proximal edge **4008** of the cutting element **4004** cuts a channel, groove, or other feature as defined by the shape of the proximal edge **4008** into the bone of the ilium **1005**. As seen in FIG. **51**B, the proximal retraction of the joint preparation tool **4000** forms a receiving space **4012** within the bone of the ilium **1005** for use in a particular fusion procedure. While FIG. **51**B depicts the cutting element **4004** only partially retracted from the articular region **1044**, the cutting element **4004** may be fully retracted such that the keel-cuts forming the receiving space **4014** extend to the proximal end of the joint line **1030**.

[0321] Alternatively and as seen in FIG. **51**C, which is the same as FIG. **51**B except the shaft **4006** of the joint preparation tool **4000** is rotated about ninety degrees, the tooling head **4002** may be removed from the articular region **1044** after the ninety degree rotation by a proximal force F4. Thus, the tooling head **4002** is removed from the joint without performing a full keel-cut that would extend the receiving space **4012** to the proximal end of the joint line **1030**. Turning to FIG. **51**D, which depicts the receiving space **4012** after the joint preparation tool **4000** has been proximally withdrawn; the receiving space **4012** may be filled with a biological material **4014** such as an allo/autograft, synthetic biologic, or scaffold, among other materials. Next, a bone tamp **4016** or other device may be used to apply a distal force F5 along the joint line **1030** so as to compress the biological material **4014** into the receiving space **4012**. As seen in FIG. **51**E, the bone tamp **4016** may be compressed along the joint line **1030** up to a depth of the keel-cut, among other possible depths, such that the biological material **4014** may compress across the articular surface of the sacrum **1004** and the groove formed in the receiving space **4012**.

[0322] In certain embodiments of the method, keel-cuts can be made in either or both of the sacrum **1004** and the ilium **1005** and such a decision will be based on the particular fusion procedure and the type and configuration of an implant to be delivered into the joint. For example, an implant having coplanar wing member may require dual keel-cuts where both the sacrum **1004** and the ilium **1005** are cut for the subsequent delivery of the implant. In such an example and referring to FIG. **52**A, a joint preparation tool **4000** having a tooling head **4002** with dual-cutting elements **4004**, as described in reference to FIG. **13**, may be employed. Similar to as discussed previously, the joint preparation tool **4000** having dual-cutting elements **4004** may be delivered into the sacroiliac joint articular region **1044** with the outwardly extending cutting elements **4004** positioned within the joint plane **1030** such that the proximal edges **4008** extend across the joint line **1030**. Once the joint preparation tool **4000** is delivered into the articular region **1044** at an appropriate depth, as seen in FIG. **52**A, the tool **4000** may be rotated about ninety degrees such that the cutting elements extend generally perpendicularly into the sacrum **1004** and the ilium **1005**. Next, as seen in FIG. **52**B, the joint preparation tool **4000** may be proximally retracted by a force F6 (e.g., via a slap hammer) such that the dual-cutting elements **4004** form opposing channels **4018** in the sacrum **1004** and the ilium **1005** that match the shape of an implant to be delivered in the surgical procedure.

[0323] In certain embodiments, the dual-cutting elements **4004** are identical in shape and size. In other embodiments, the dual-cutting elements **4004** may be differently configured based on the physical characteristics of the bone type to be cut, the implant to be delivered, etc. That is, since the ilium **1005** is generally a harder bone than the sacrum, a different type of cutting edge configuration may be used on one of the cutting elements **4004**.

[0324] Now the discussion will focus on methods of preparing the sacroiliac joint **1000** for a surgical fusion procedure with a joint preparation tool assembly including a trial tool assembly and a cutting tool as described in reference to FIGS. **27**-**47**.

[0325] Referring primarily to FIG. **53**A, a trial tool assembly **4022** having an implant trial **4024** at a distal end of the assembly **4022** may be delivered into the sacroiliac joint articular region **1044** of a patient. The trial tool assembly **4022** may be guided into the articular region **1044** by a guide wire (not shown) that was previously delivered into the joint by previously described methods. In particular, the guide wire may be received within a bore that extends from a distal end to a proximal end of the implant trial **4024**. The implant

trial **4024** may be delivered within the joint plane **1030** such that the planar top and bottom surfaces **4026** are parallel to the joint plane **1030** and the opposite side surfaces **4028** of the implant trial **4024** are perpendicular to the joint plane **1030**.

[0326] The implant trial **4024** may be forcibly delivered into the articular region **1044** by using a hammer or mallet to strike an impact plate (not shown) at a proximal end of the joint preparation tool assembly **4020**. And, in certain embodiments, a trial impact rod assembly (not shown) may be used in conjunction with the trial tool assembly **4022** to provide stiffness during the forceful delivery of the implant trial **4024** within the articular region **1044**.

[0327] The implant trial **4024** is used to determine an appropriate fit of an implant. So, implant trials **4024** of increasingly larger size may be delivered into the articular region **1044** until an implant trial **4024** is chosen that appropriately fits the top and bottom surfaces **4026** of the implant trial **4024** against the articular surfaces of the articular region **1044**.

[0328] Referring primarily to FIG. **53**B, which depicts the implant trial **4024** positioned within the articular region **1044**, a cutting tool **4030** may be slidingly engaged with a shaft **4032** of the trial tool assembly **4022** and translated distally on the shaft **4032**. As seen in FIG. **53**B and as described previously, the cutting tool **4030** is guided along the shaft **4032** in a single orientation such that it will be guided within a channel (not shown) on the top surface **4026** of the implant trial **4024**. The channel is configured to guide the cutting tool **4030** such that a cutting element **4034** of the cutting tool **4030** extends generally perpendicular to the top surface **4026** of the implant trial **4024**. Thus, as seen in FIG. **53**C, as the cutting element **4034** advances distally into the channel of the implant trial **4024** and within the articular region **1044**, the cutting element **4034** extends and cuts into the articular surface of either the sacrum **1004** or the ilium **1005**. A reciprocating motion may be employed.

[0329] While, as seen in FIG. **53**C, the cutting element **4034** extends and cuts into the ilium **1005** during a distal stroke of the cutting tool **4030**, the process may be similarly performed with respect to the sacrum **1004**. Alternatively, a cutting tool **4030** with dual-cutting elements **4034** may be employed to deliver simultaneous and opposing cuts into both the sacrum **1004** and the ilium **1005**. In such an embodiment of the joint preparation tool assembly **4020** with dual-cutting elements **4034** (and, thus, dual-channels in the implant trial **4024**) the individual cutting elements **4034** may be the same or different. The individual cutting elements **4034** may, for example, be different types and configurations of cutting elements **4034** since the ilium **1005** is a generally harder bone than the sacrum **1004**. Additionally, cutting tools **4030** with increasingly larger cutting elements **4034** may be employed such that initial cuts are smaller and of a shallower depth into the articular surfaces while subsequent cuts are larger and of a deeper depth into the articular surfaces of the sacrum **1004** and ilium **1005**.

[0330] After employing the joint preparation tool **4020** to make appropriate keel-cuts, as seen in FIG. **53**D, the tool **4020** may be removed from the articular region **1044** leaving one or more channels **4036** that match an implant to be delivered into the joint **1000**.

[0331] As stated previously, the various tools and assemblies discussed herein may be used independently or in combination with each other. Thus, in certain embodiments and at various steps within the methodology the anchor arm assembly **258**, as discussed in reference to FIGS. **24-25**, may be employed with any of the joint preparation tools to deliver an anchoring element **282** across the sacroiliac joint. The anchoring arm assembly **258** may, for example, orient the anchoring element **282** to be delivered first through the ilium, transversely across the joint line of the sacroiliac joint, and then through the sacrum. Alternatively, the anchoring arm assembly **258** may orient the anchoring element **282** to be delivered first through the sacrum, transversely across the joint line of the sacroiliac joint, and then through the ilium.

[0332] Understandably, other instruments can be utilized separately or in combination during the course of any of the steps of the methodology, e.g., for the removal of articular cartilage or tissue between articular surfaces, such as any of the tools previously described or any of: endoscopy tools, box chisels, side cutting router bits, burs, flexible burs and bits, hole saws, key hole saw, medical bone chainsaw osteotome, curettes, lasers (e.g., C02, Neodymium/Y AG (yttrium-aluminum-garnet), argon, and ruby), electrosurgical equipment employing electromagnetic energy (the cutting electrode can be a fine micro-needle, a lancet, a knife, a wire or band loop, a snare, an energized scalpel, or the like) where the energy transmitted can be either monopolar or bipolar and operate with high frequency currents, for example, in the range of about 300 kHz and about 1000 kHz whether as pure sinusoidal current waveform where the "crest factor" can be constant at about 1.4 for every sinus waveform, and a voltage peak of approximately 300 V to enable a "pure" cutting effect with the smallest possible coagulation effect or as amplitude modulated current waveforms where the crest factor varies between 1.5 and 8, with decreasing crest factors providing less of a coagulation effect. Electrosurgical waveforms may be set to promote two types of tissue effects, namely coagulation (temperature rises within cells, which then dehydrate and shrink) or cut (heating of cellular water occurs so rapidly that cells burst). The proportion of cells coagulated to those cut can be varied, resulting in a "blended" or "mixed" effect. Additionally, a fully rectified current, or a partially rectified current, or a fulguration current where a greater amount or lateral heat is produced can be employed to find the articular surfaces of the joint and aid in advancing a probe or guide wire into a position in between the articulating surfaces. These currents can effectively degrade the cartilage and allow advance into the joint without grossly penetrating much beyond the cartilage.

[0333] The foregoing merely illustrates the principles of the embodiments described herein. Various modifications and alterations to the described embodiments will be apparent to those skilled in the art in view of the teachings herein. It will thus be appreciated that those skilled in the art will be able to devise numerous systems, arrangements and methods which, although not explicitly shown or described herein, embody the principles of the embodiments described herein and are thus within the spirit and scope of the present disclosure. From the above description and drawings, it will be understood by those of ordinary skill in the art that the particular embodiments shown and described are for purposes of illustrations only and are not intended to limit the scope of the present disclosure. References to details of particular embodiments are not intended to limit the scope of the disclosure.

What is claimed is:

1. A method of surgically preparing a sacroiliac joint having a sacrum, an ilium, and a sacroiliac joint space defined therebetween for a surgical fusion procedure, the method comprising:

a) approaching the sacroiliac joint space with a joint preparation tool comprising:

a proximal end, a distal end, a cutting element supported at the distal end, and a shaft extending proximally from the cutting element, the cutting element comprising a length extending between a proximal cutting element end and a distal cutting element end, a first side extending the length, and a second side opposite the first side extending the length, wherein the cutting element comprises an exterior having an asymmetric cutting band such that the first side includes a first surface having a first texture and the second side includes a second surface having a second texture, the first and second textures being different such that the first texture is substantially smoother than the second texture; and

b) delivering at least a portion of the cutting element non-transversely into the sacroiliac joint space, the cutting element being oriented in the sacroiliac joint space such that the first surface opposes the sacrum and the second surface opposes the ilium.

2. The method of claim **1**, wherein the second texture comprises a geometrically repeating pattern that is configured to abrade the ilium.

3. The method of claim **1**, wherein the second texture comprises a non-repeating pattern that is configured to abrade the ilium.

4. The method of claim **1**, wherein the second texture comprises ridges in a chevron pattern that is configured to abrade the ilium.

5. The method of claim **1**, wherein the first texture is a smooth planar surface, and the second texture is a rasping surface.

6. The method of claim **1**, wherein the first texture comprises a first rasp band, and the second texture comprises a second rasp band, wherein the first rasp band is less abrasive than the second rasp band.

7. The method of claim **1**, wherein the cutting element comprises a chamfered tip at the distal cutting element end.

8. The method of claim **1**, wherein the cutting element is a planar member and the first surface is a planar surface and the second surface is a planar surface opposite of and generally parallel to the first surface.

9. The method of claim **1**, wherein the cutting element is a wedge-shaped member, the first surface is a planar surface, and the second surface is a planar surface opposite of and non-parallel to the first surface, the first and second surfaces tapering towards the distal cutting element end.

10. The method of claim **1**, further comprising delivering a joint implant non-transversely into the sacroiliac joint space.

11. The method of claim **10**, wherein the joint implant comprises an intra-articular member, and a cross member generally orthogonal to the intra-articular member, the intra-articular member positioned non-transversely in the sacroiliac joint space upon delivery into the sacroiliac joint space.

12. The method of claim **1**, further comprising delivering an anchor across the sacroiliac joint space and into at least one of the sacrum and the ilium.

* * * * *