EXHIBIT 1016

US006174311B1

(12) **United States Patent**
Branch et al.

(10) **Patent No.: US 6,174,311 B1**
(45) **Date of Patent: Jan. 16, 2001**

(54) **INTERBODY FUSION GRAFTS AND INSTRUMENTATION**

(75) Inventors: **Charles L. Branch**, Advance, NC (US); **Mingyan Liu**, Bourg-la-Reine (FR); **Lawrence M. Boyd**, Memphis, TN (US); **Loic Josse**, Palaja (FR)

(73) Assignee: **SDGI Holdings, Inc.**, Memphis, TN (US)

(*) Notice: Under 35 U.S.C. 154(b), the term of this patent shall be extended for 0 days.

(21) Appl. No.: **09/181,353**

(22) Filed: **Oct. 28, 1998**

(51) **Int. Cl.**[7] **A61B 17/56**

(52) **U.S. Cl.** **606/61**; 606/60

(58) **Field of Search** 606/61, 60, 59, 606/62, 70–80, 90–104; 623/16–20

(56) **References Cited**

U.S. PATENT DOCUMENTS

3,486,505		12/1969	Morrison	128/303
3,848,601		11/1974	Ma et al.	128/305
4,545,374		10/1985	Jacobson	128/303
4,714,469		12/1987	Kenna	623/17
4,736,738		4/1988	Lipovsek et al.	128/92
4,743,256		5/1988	Brantigan	623/17
4,834,757		5/1989	Brantigan	623/17
4,877,020		10/1989	Vich	128/92
4,878,915		11/1989	Brantigan	623/17
4,950,296		8/1990	McIntyre	623/16
5,015,247	*	5/1991	Michelson	606/61
5,062,845		11/1991	Kuslich et al.	606/80
5,190,548		3/1993	Davis	606/80
5,250,061		10/1993	Michelson	606/160
5,306,309		4/1994	Wagner et al.	623/17
5,423,825		6/1995	Levin	606/86
5,423,855	*	6/1995	Marienne	606/208
5,425,772		6/1995	Brantigan	623/17
5,443,514		8/1995	Steffee	623/17

(List continued on next page.)

FOREIGN PATENT DOCUMENTS

0 077 159	4/1983	(EP) .
0 307 241	3/1989	(EP) .
95/08306	3/1995	(WO) .
95/15133	6/1995	(WO) .
96/22747	8/1996	(WO) .
96/40013	12/1996	(WO) .
97/13378	4/1997	(WO) .
97/15248	5/1997	(WO) .
97/25945	7/1997	(WO) .

OTHER PUBLICATIONS

AcroMed Spine Tools "PLIG Instruments" (undated).

"Brantigan I/F Cage Acromed" (undated).

"Brantigan I/F Cage for PLIF"(1991).

Sofamor Danek "Laparoscopic Bone Dowel Surgical Technique" (1995).

Sofamor Danek "Surgical Technique Using Bone Dowel Instrumentation for Posterior Approach", LIT.PLIF.ST96 (1996).

Sofamor Danek "Surgical Tips Posterior Approach" (1998).

University of Florida Tissue Bank, Inc. "Allograft Catalog" (1998).

Primary Examiner—Michael Buiz
Assistant Examiner—Lien Ngo
(74) *Attorney, Agent, or Firm*—Woodard, Emhardt, Naughton Moriarity & McNett

(57) **ABSTRACT**

This invention relates to implants formed from donor bone for use in lumbar interbody fusion procedures and instruments for performing such procedures. The implants are formed to include a concave surface formed from a portion of the medullary canal of a long bone. The concaved surface defines a recess in the implant that serves as a depot for osteogenic material. Specific instruments for inserting the implants prepared according to this invention and for preparing the intervertebral space to receive the implants are also provided.

16 Claims, 34 Drawing Sheets

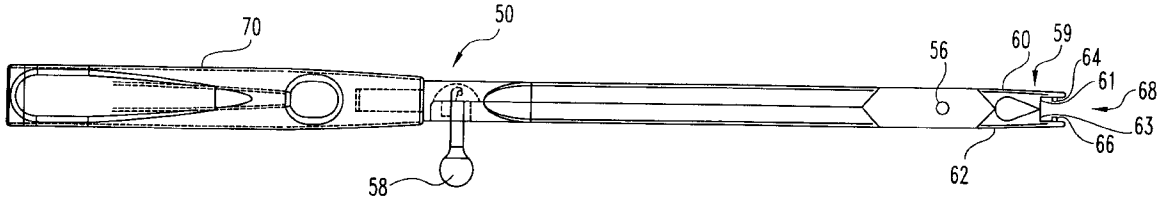

U.S. PATENT DOCUMENTS

5,445,639	8/1995	Kuslich et al.	606/80
5,484,437	1/1996	Michelson	606/61
5,489,307	2/1996	Kuslich et al.	623/17
5,499,984	3/1996	Steiner	606/80
5,514,180	5/1996	Heggeness et al.	623/17
5,593,409	1/1997	Michelson	606/61
5,609,636	3/1997	Kohrs et al.	623/17
5,645,598	7/1997	Brosnahan, III	623/17
5,669,909 *	9/1997	Zdeblick et al.	606/61
5,709,683	1/1998	Bagby	606/61
5,716,355 *	2/1998	Jackson et al.	606/61
5,720,749	2/1998	Rupp	606/79
5,728,159	3/1998	Stroever et al.	623/16
5,741,253	4/1998	Michelson	606/61
5,766,253	6/1998	Brosnahan, III	623/17
5,857,995	1/1999	Thomas et al.	604/22

* cited by examiner

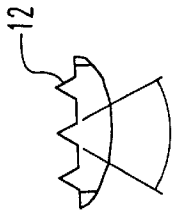

Fig. 2a

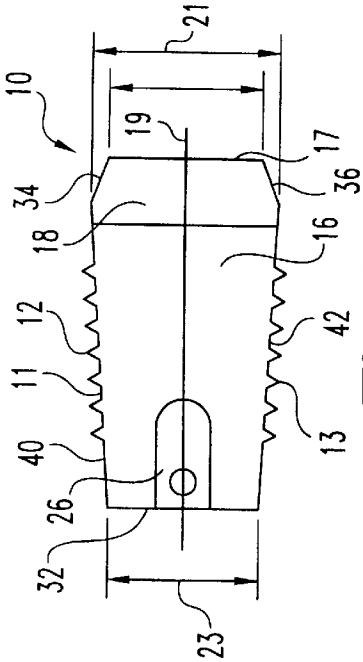

Fig. 2

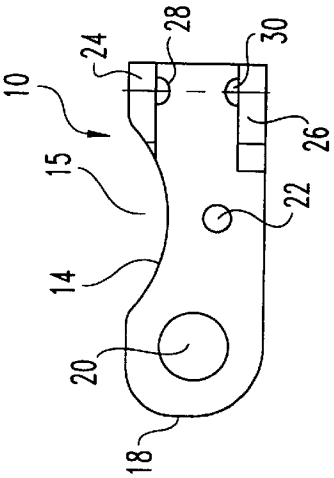

Fig. 5

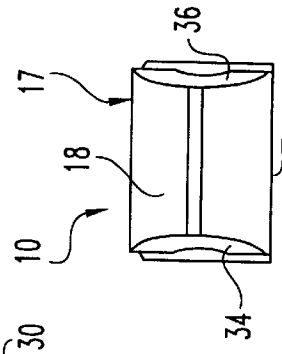

Fig. 6

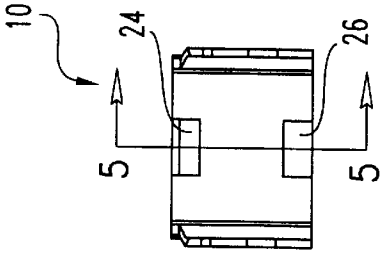

Fig. 4

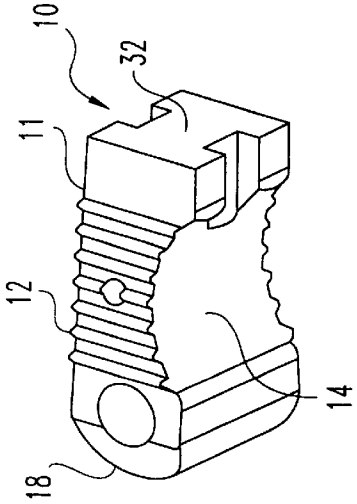

Fig. 1

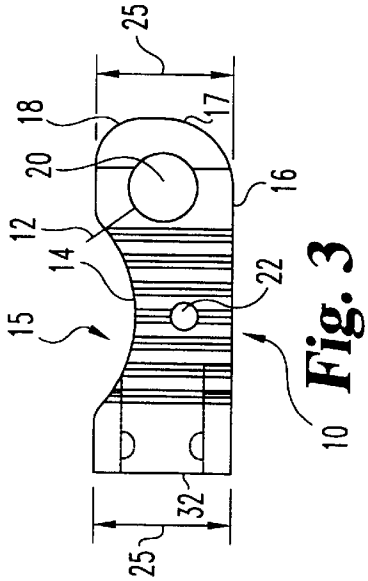

Fig. 3

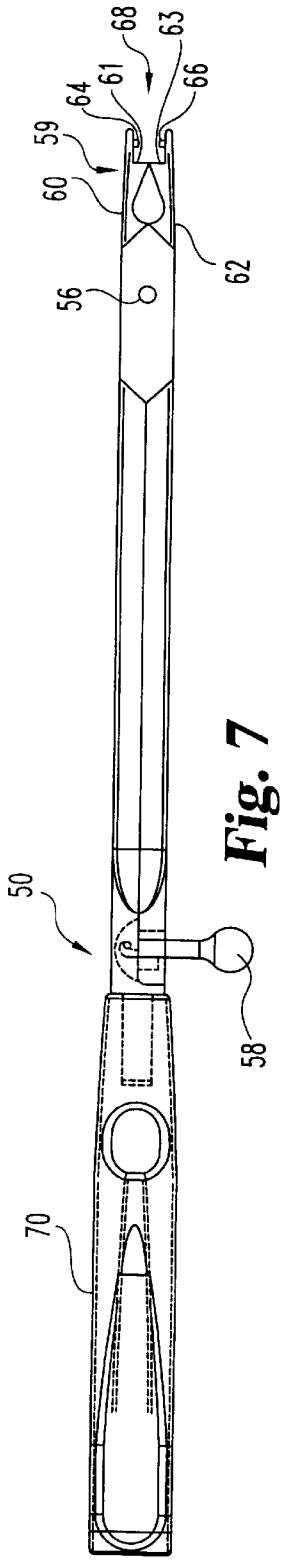

Fig. 7

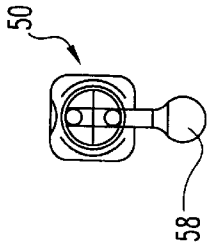

Fig. 8

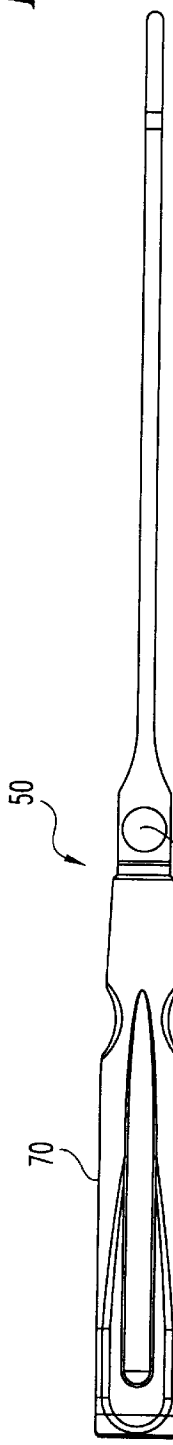

Fig. 9

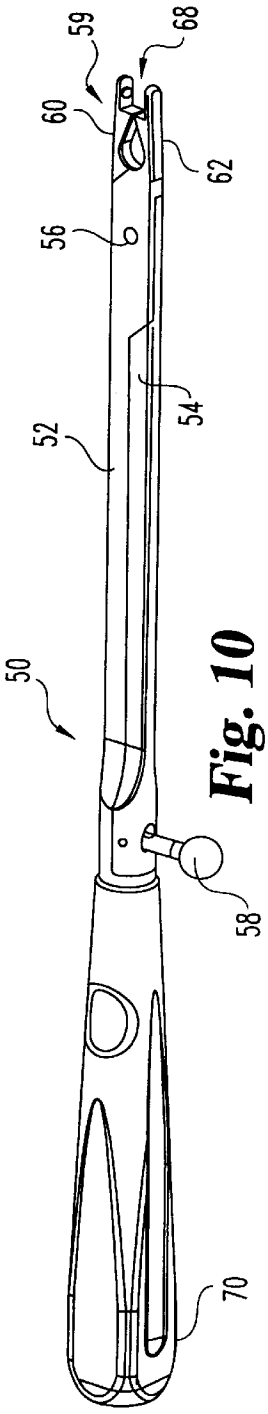

Fig. 10

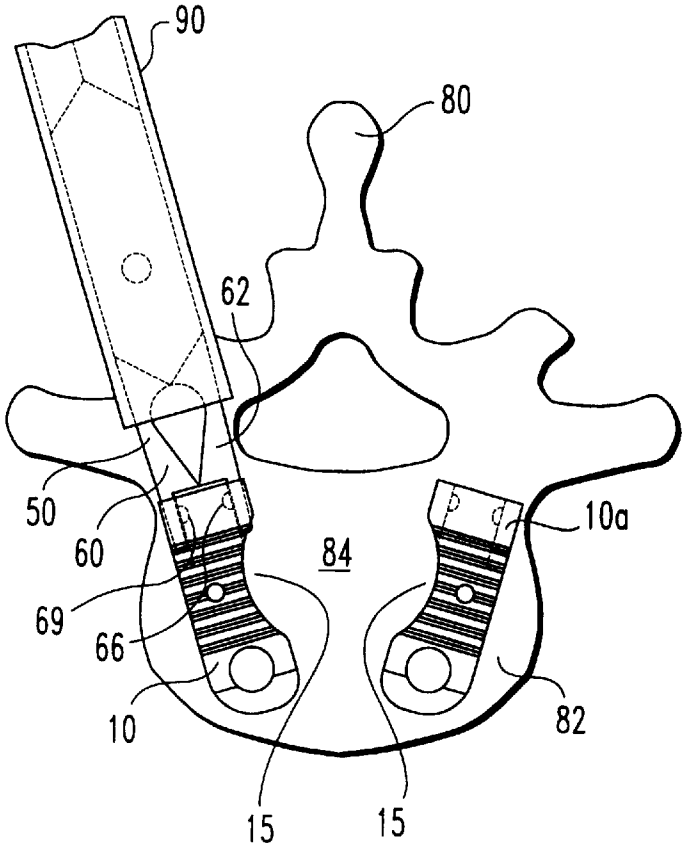
90
80
62
50
60
84
10a
69
66
10
82
15
15

Fig. 11

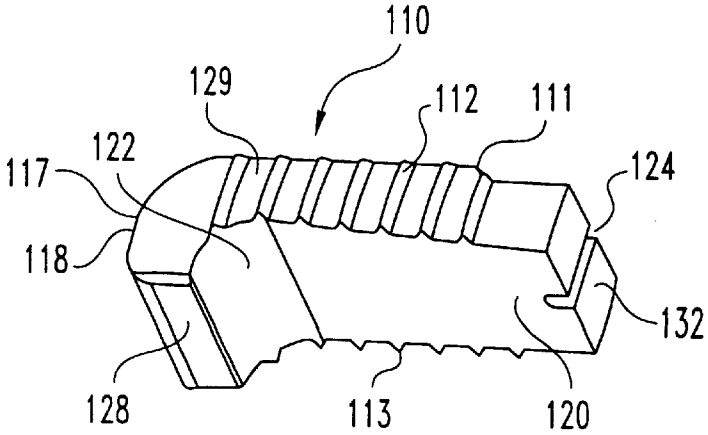
110
129
112
111
122
117
124
118
132
128
113
120

Fig. 12

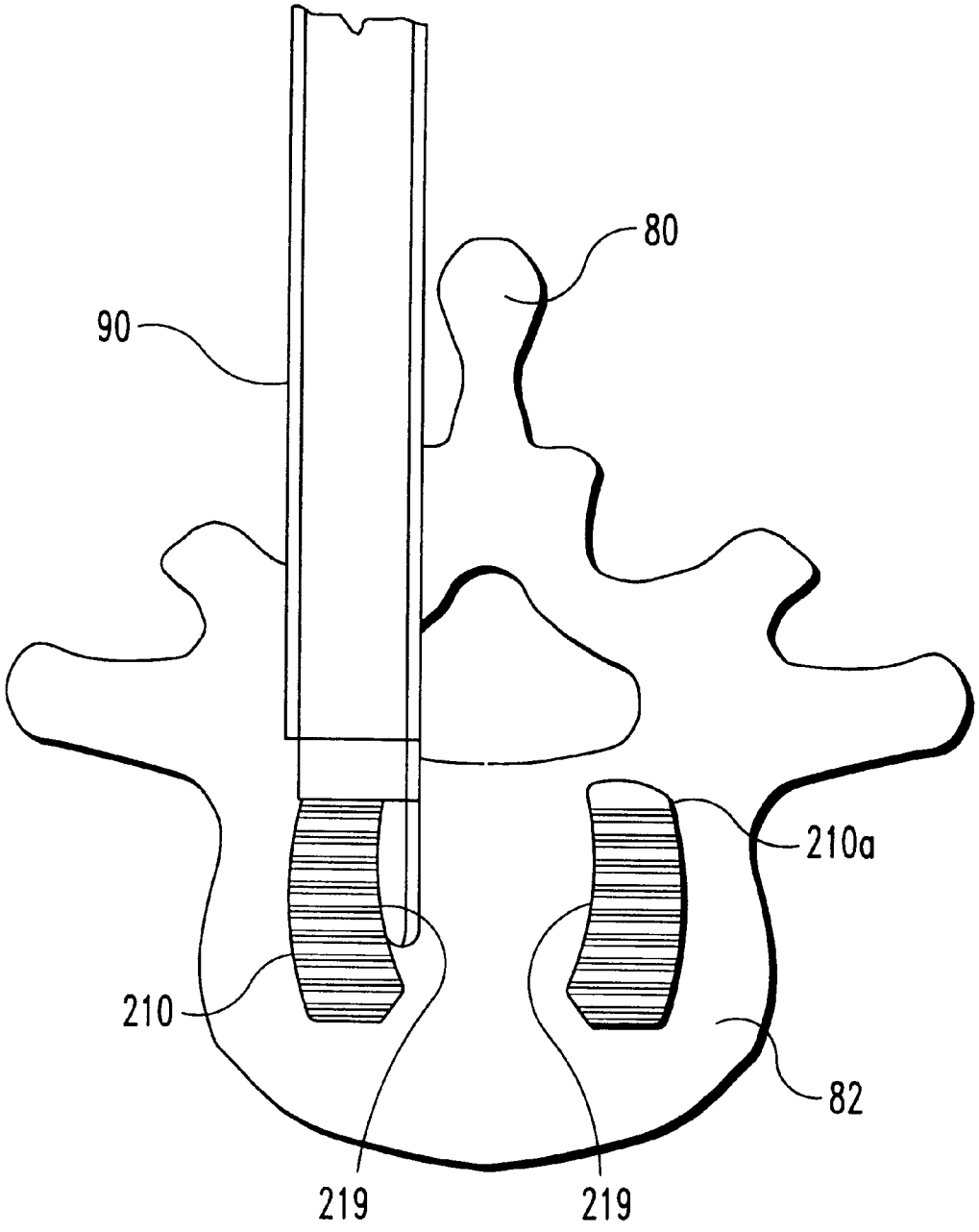

Fig. 11a

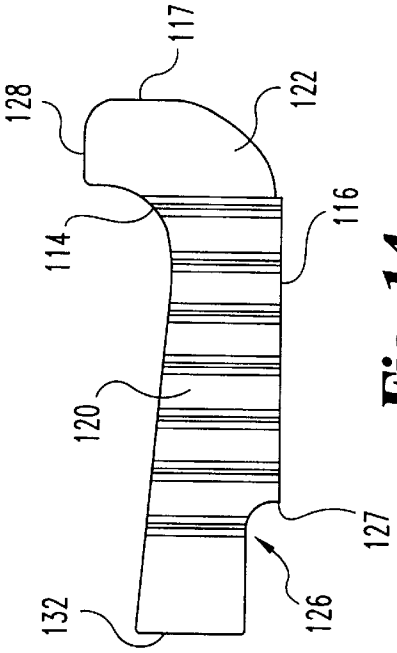

Fig. 14

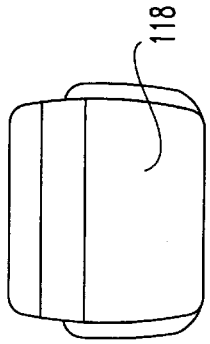

Fig. 16

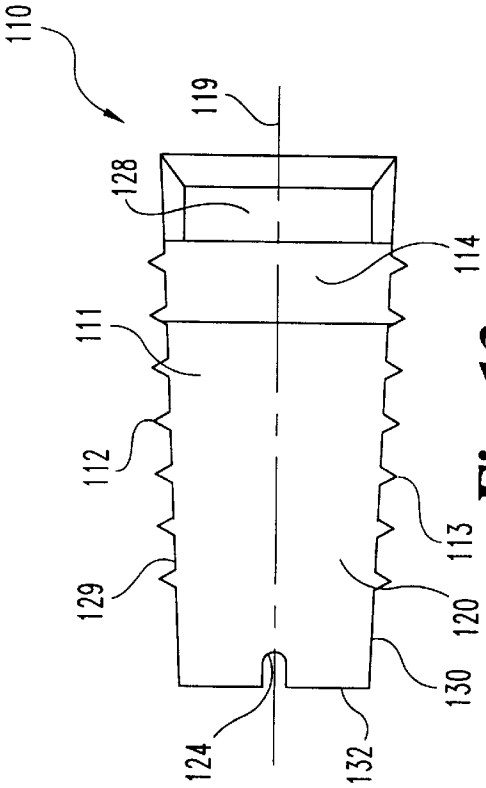

Fig. 13

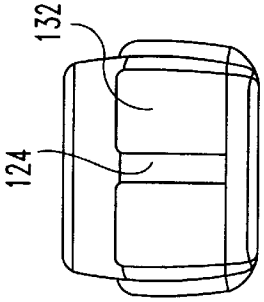

Fig. 15

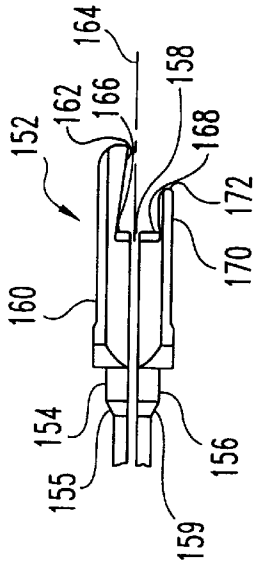

Fig. 17a

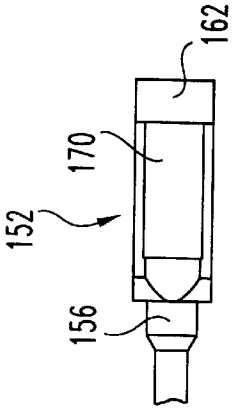

Fig. 18a

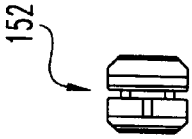

Fig. 18b

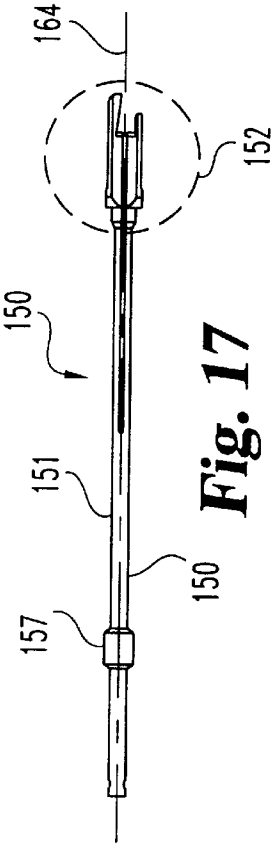

Fig. 17

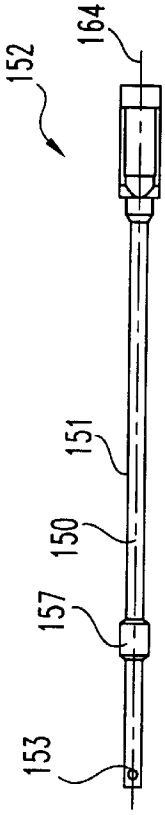

Fig. 18

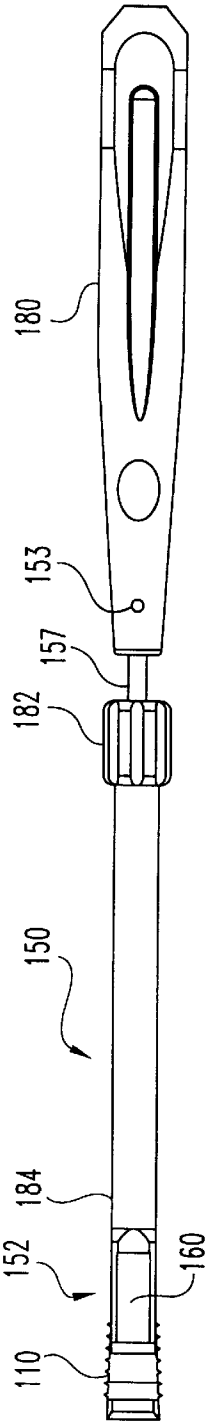

Fig. 19

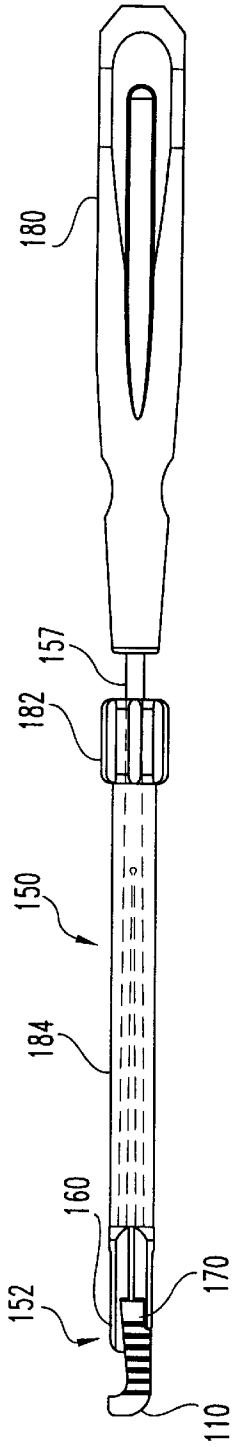

Fig. 20a

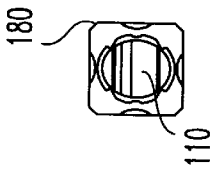

Fig. 20b

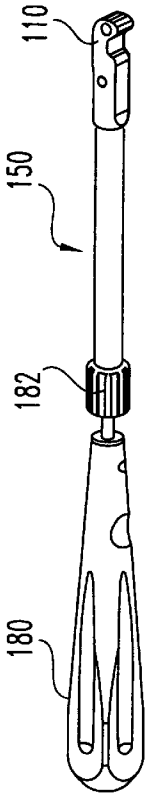

Fig. 21

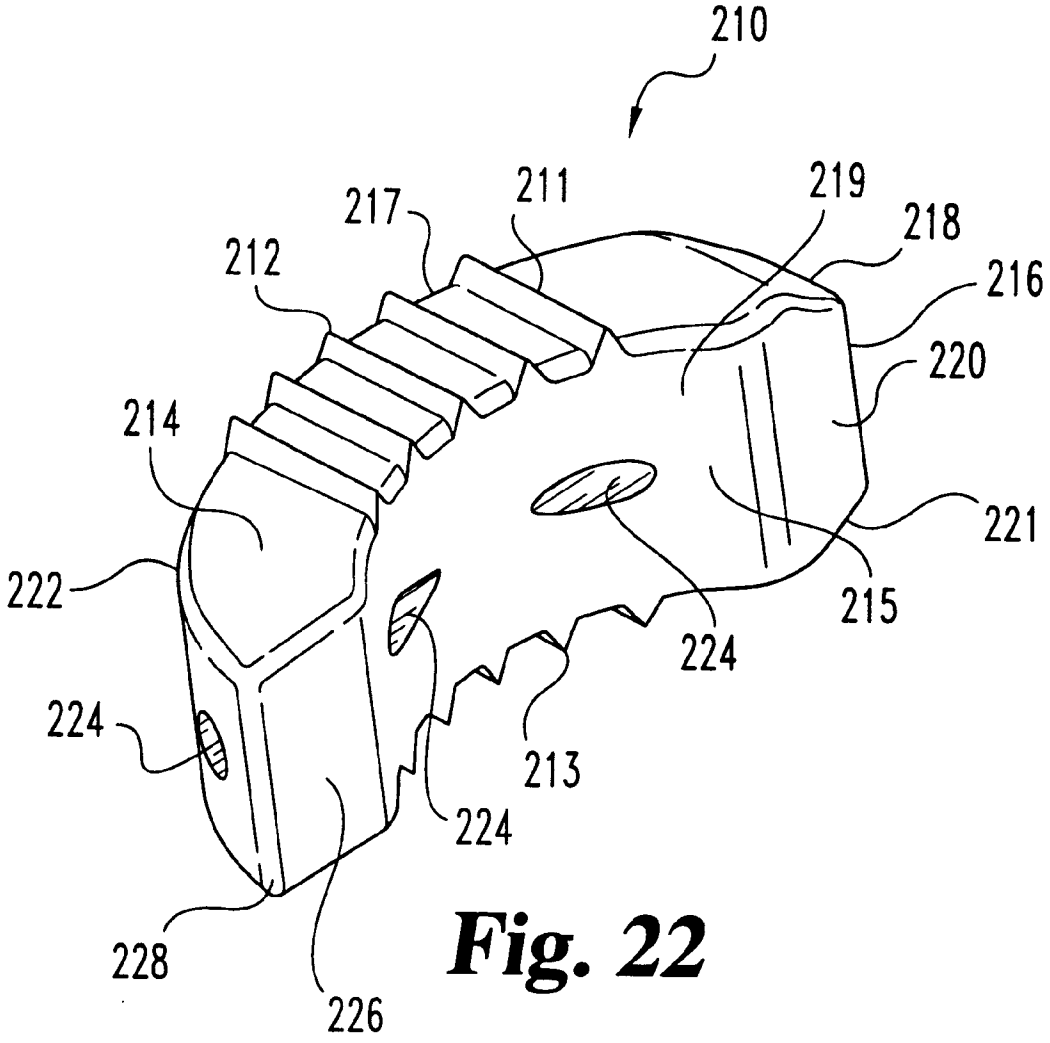
210
217
211
219
218
212
216
220
214
221
222
215
224
224
213
224
228
226

Fig. 22

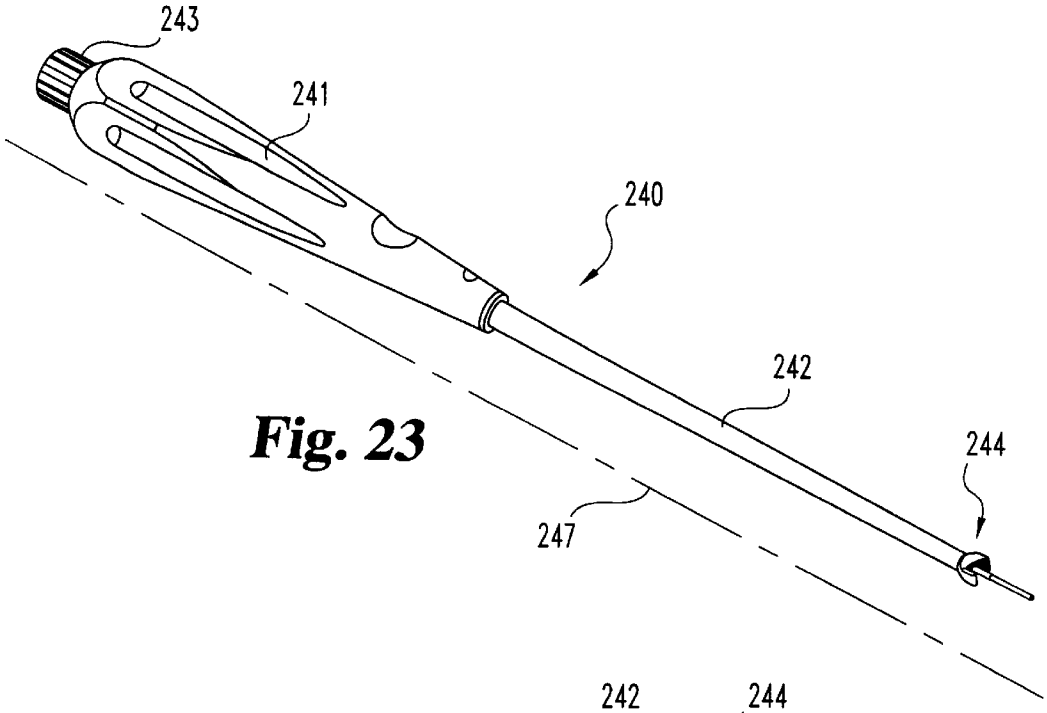

Fig. 23

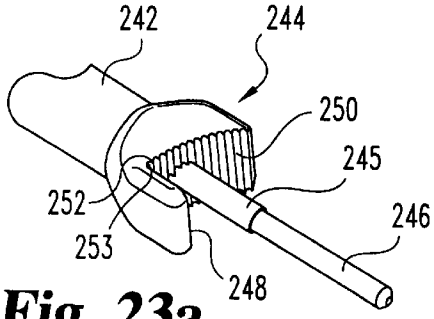

Fig. 23a

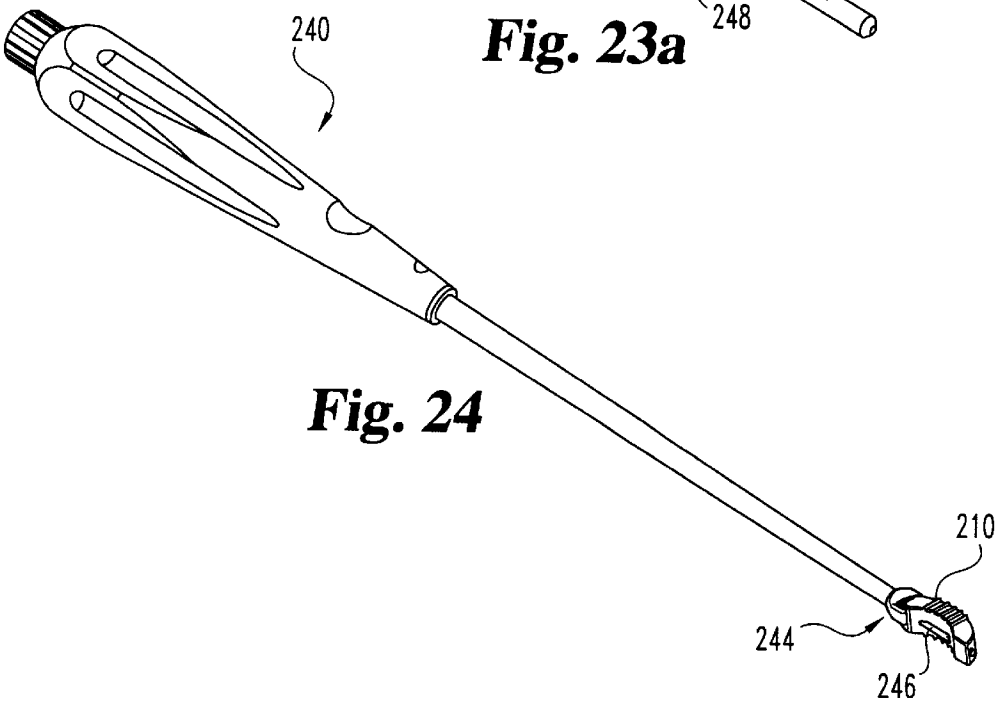

Fig. 24

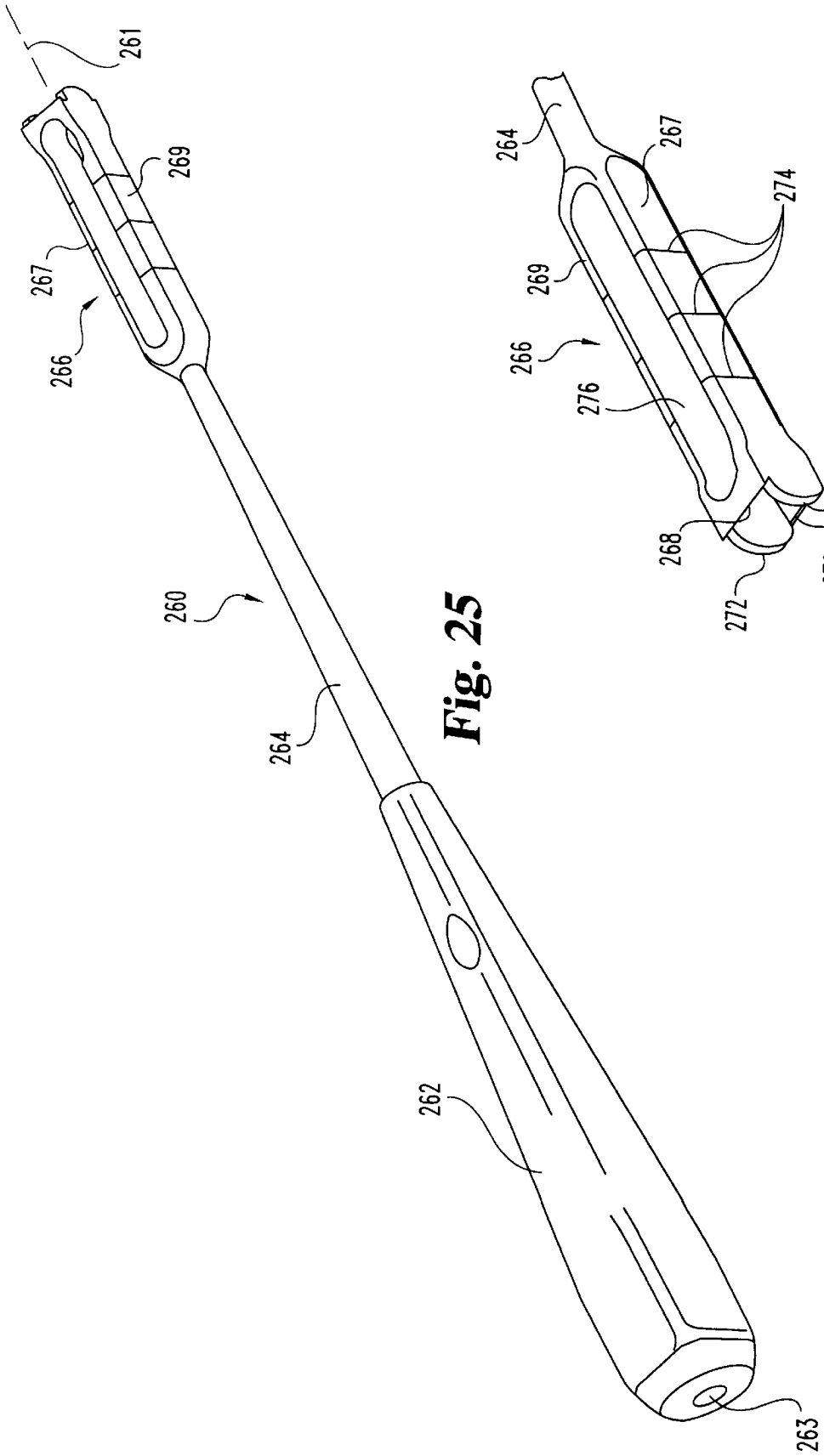

Fig. 25

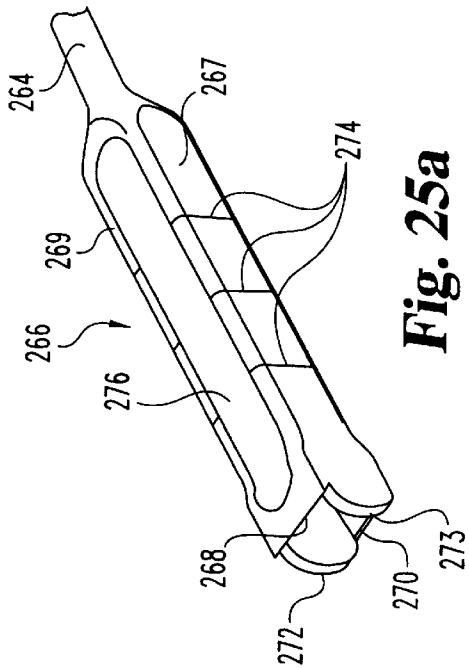

Fig. 25a

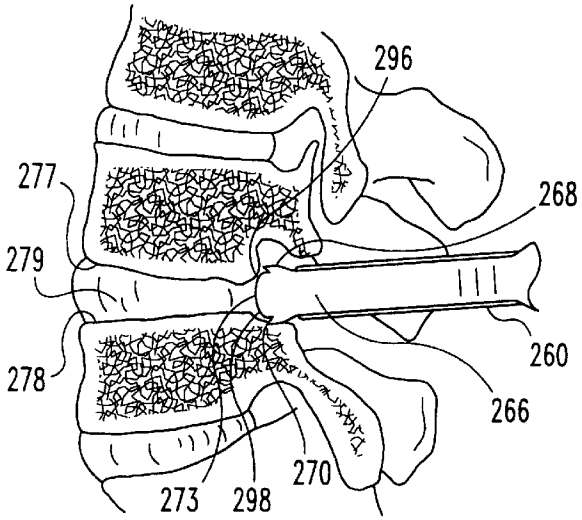

Fig. 25b

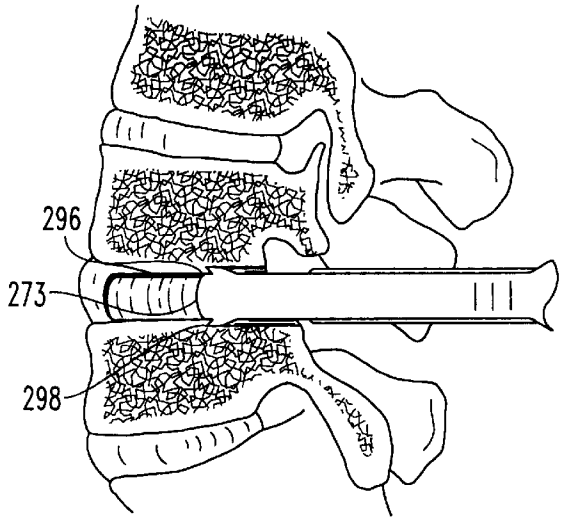

Fig. 25c

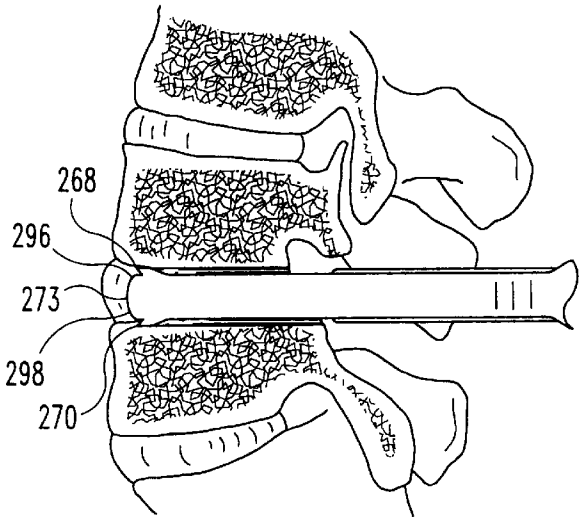

Fig. 25d

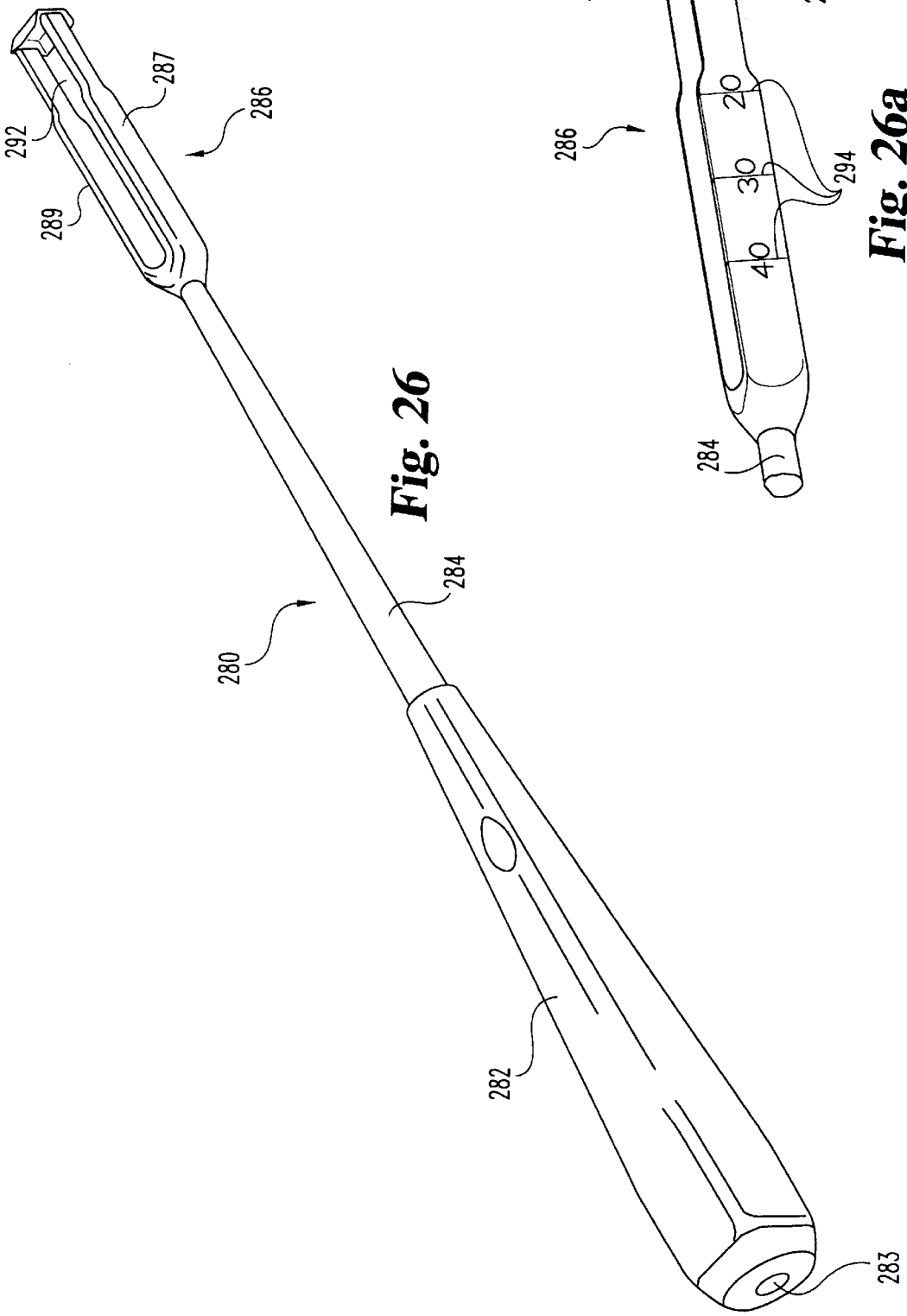

Fig. 26

Fig. 26a

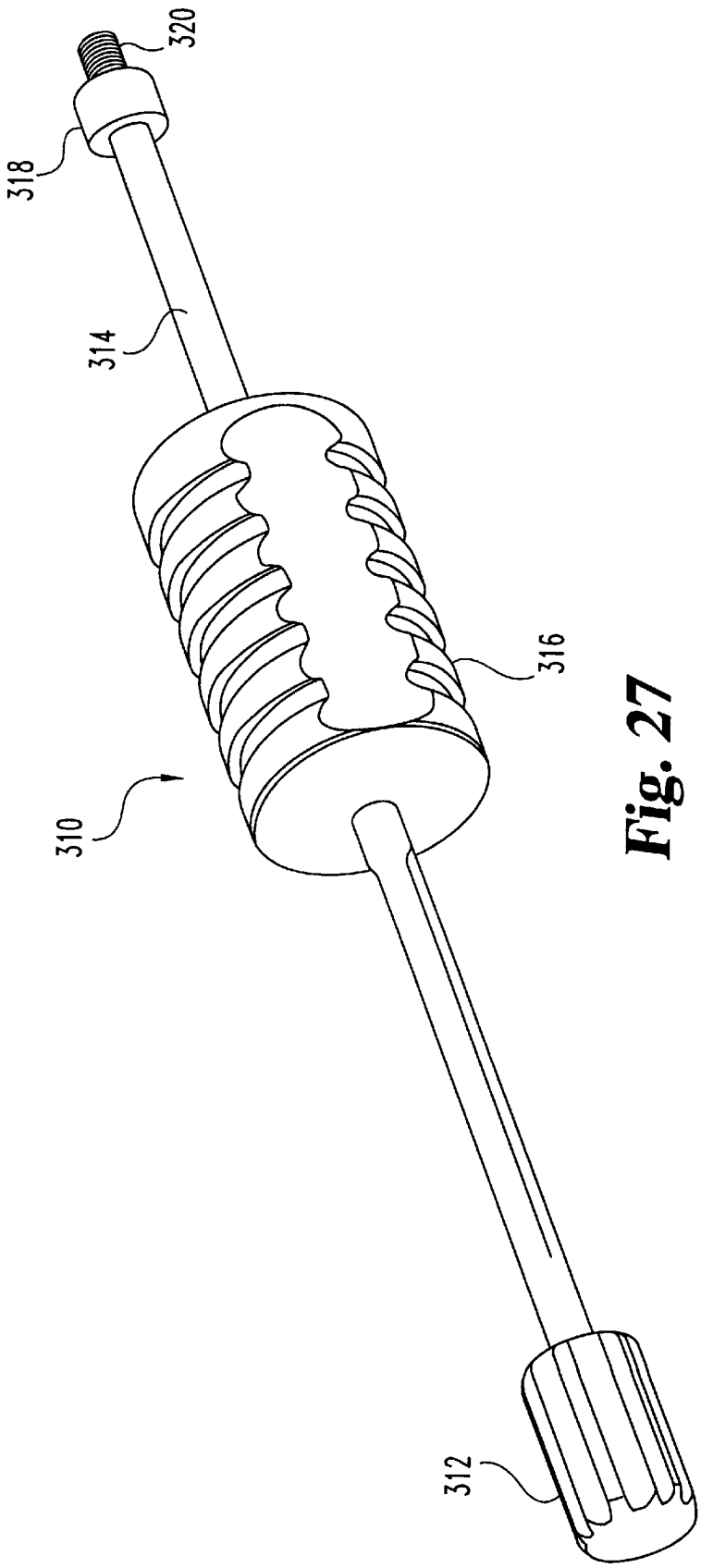

Fig. 27

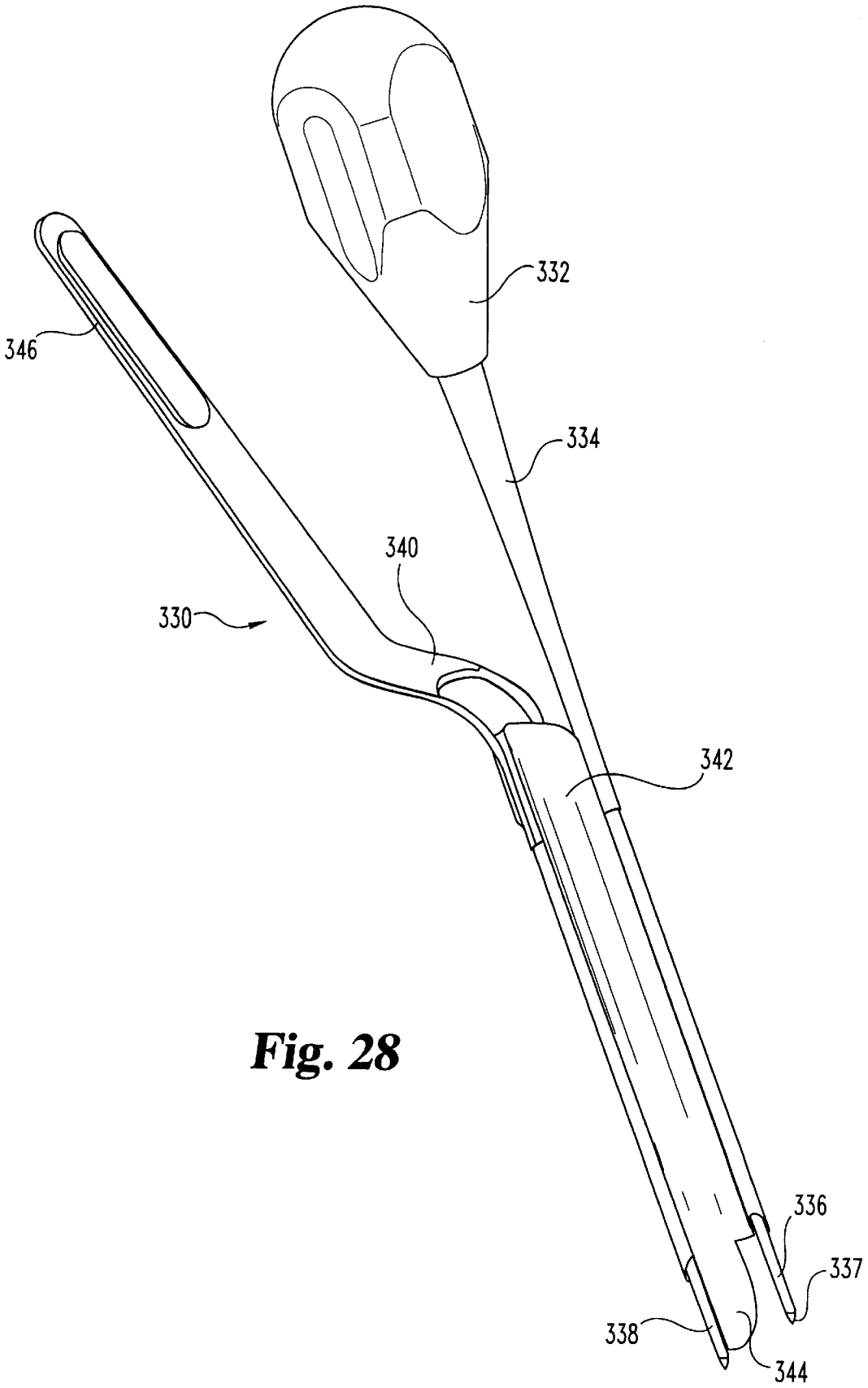

Fig. 28

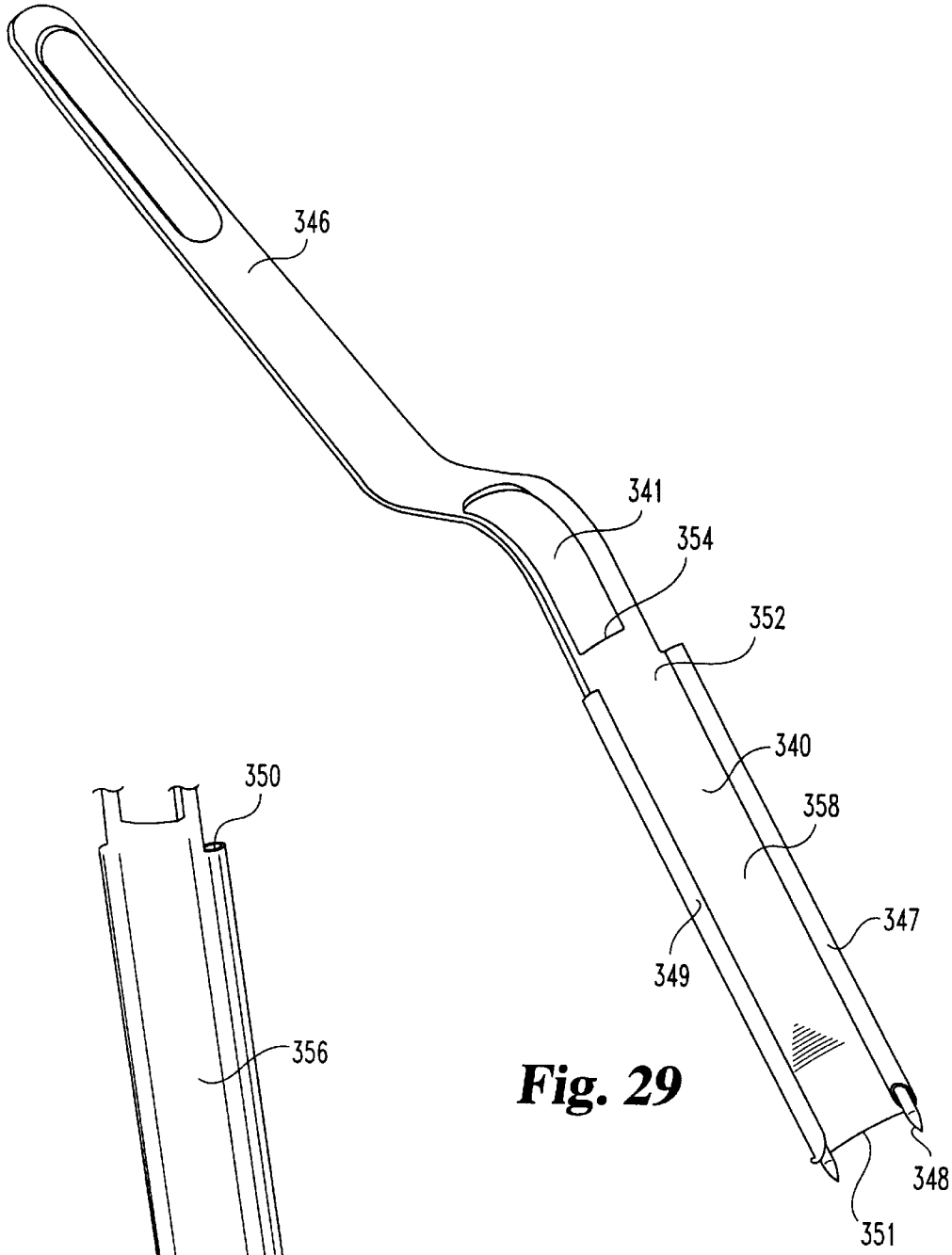

Fig. 29

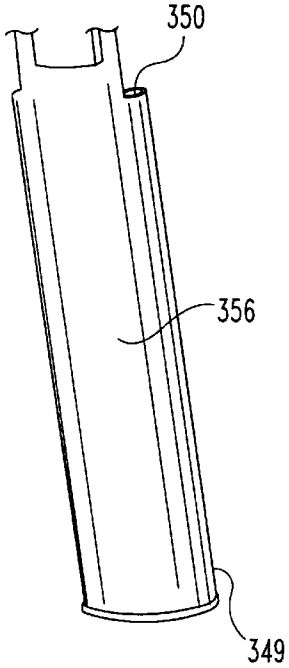

Fig. 29a

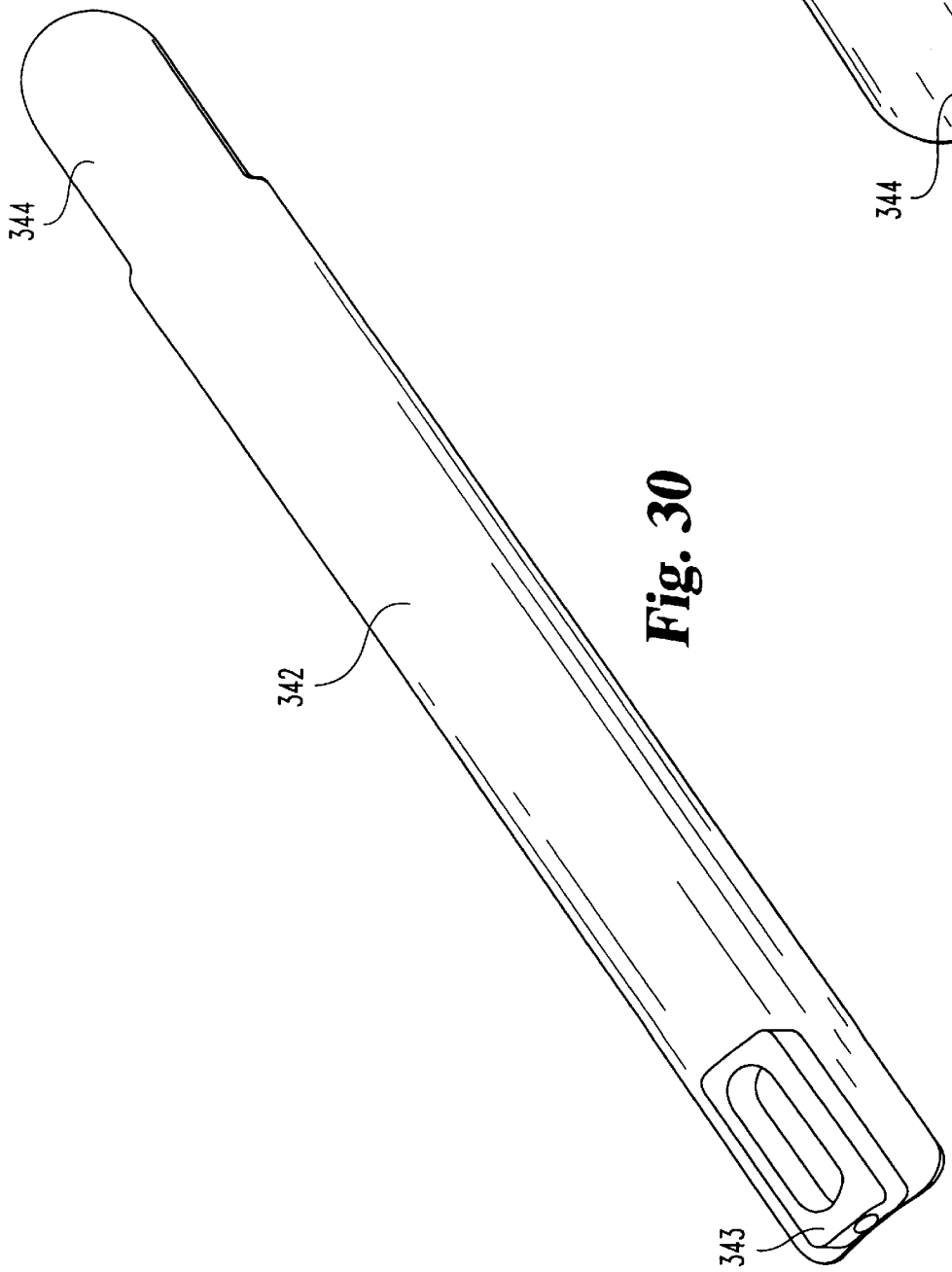

Fig. 30

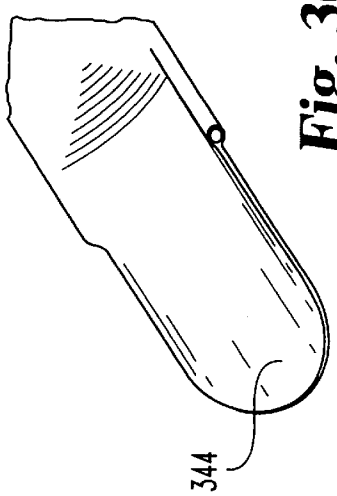

Fig. 30a

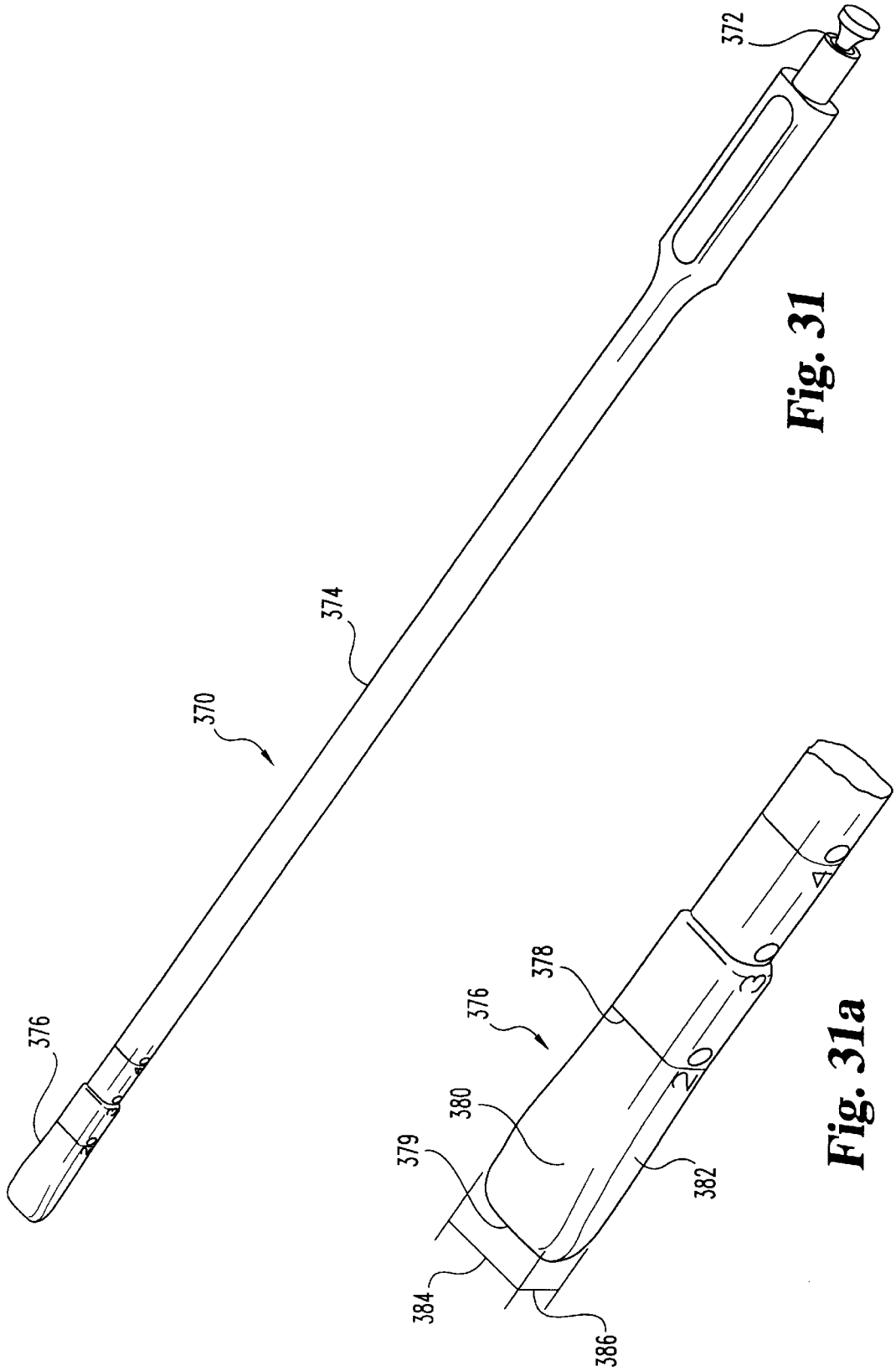

Fig. 31

Fig. 31a

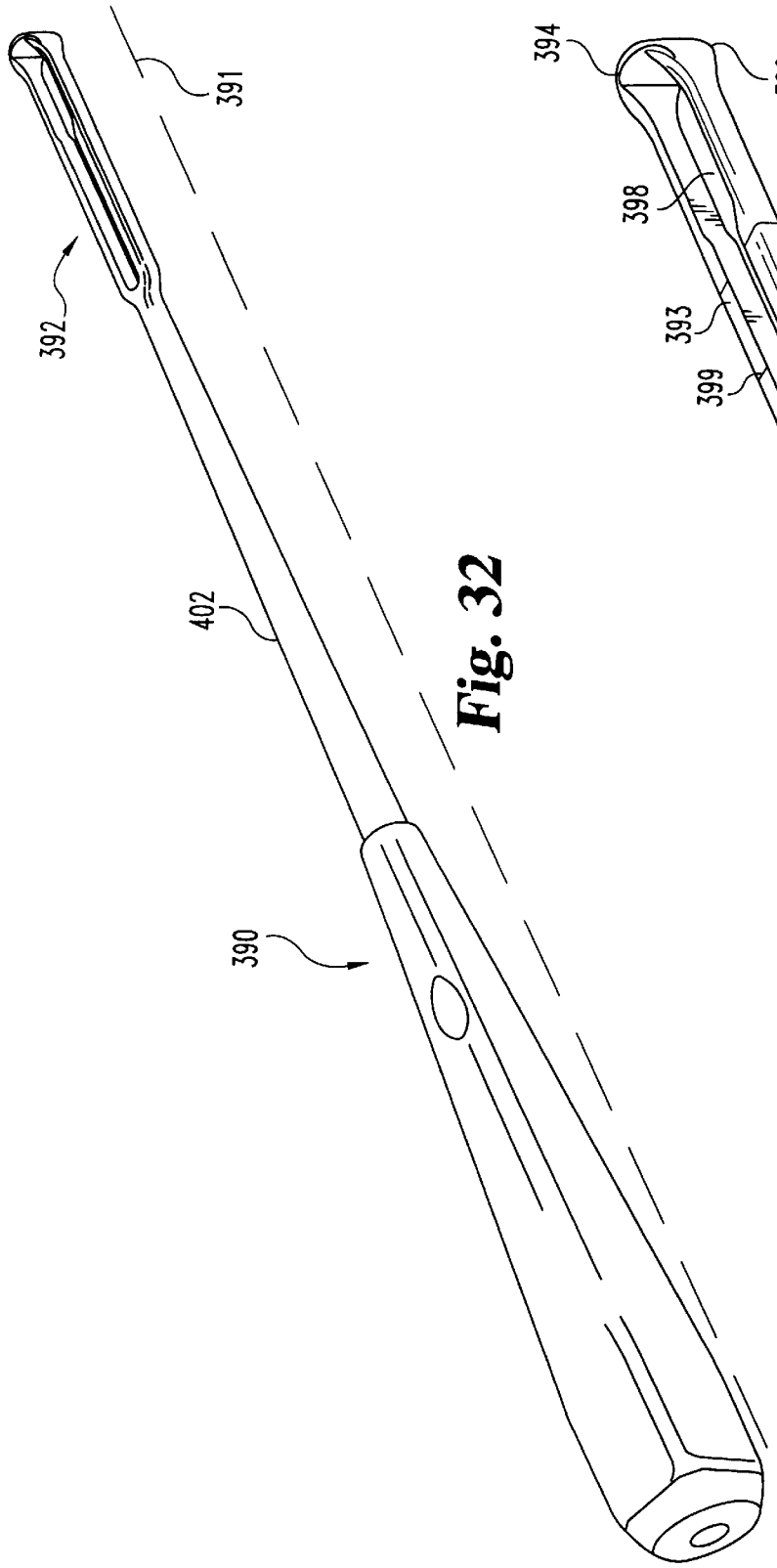

Fig. 32

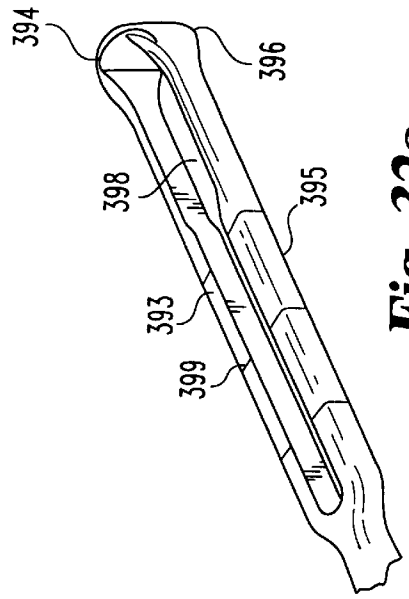

Fig. 32a

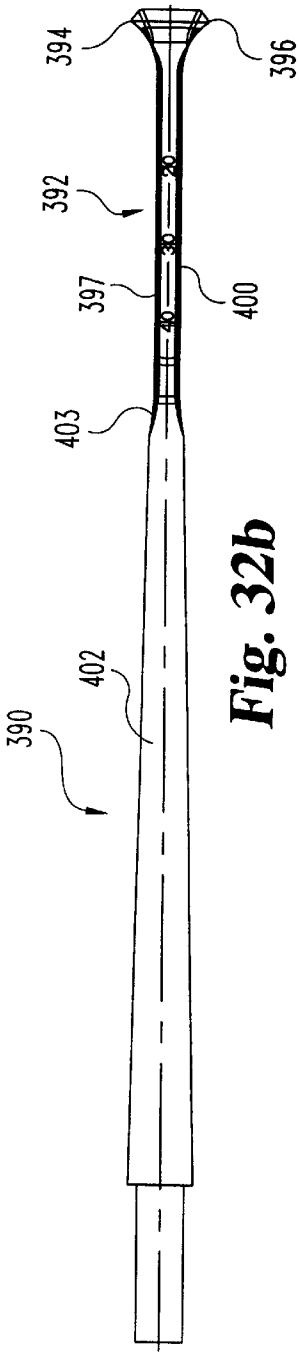

Fig. 32b

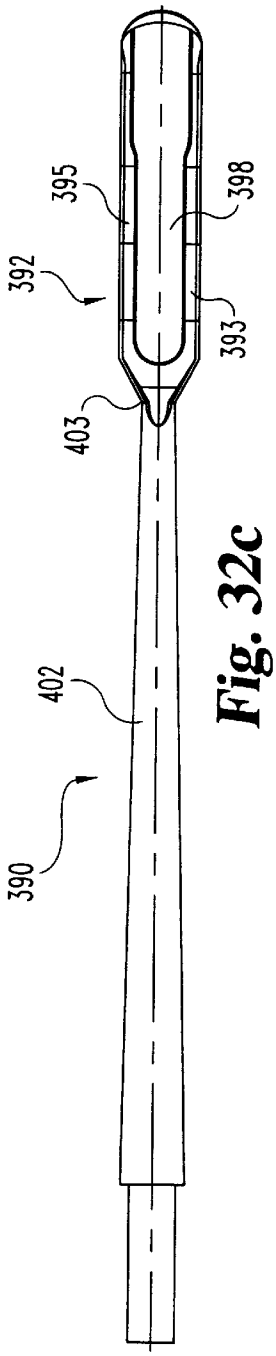

Fig. 32c

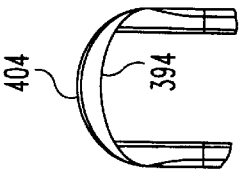

Fig. 32e

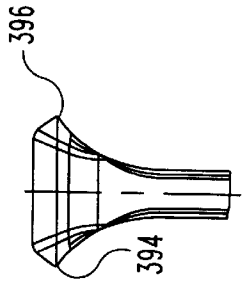

Fig. 32f

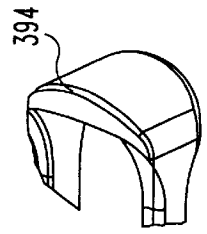

Fig. 32d

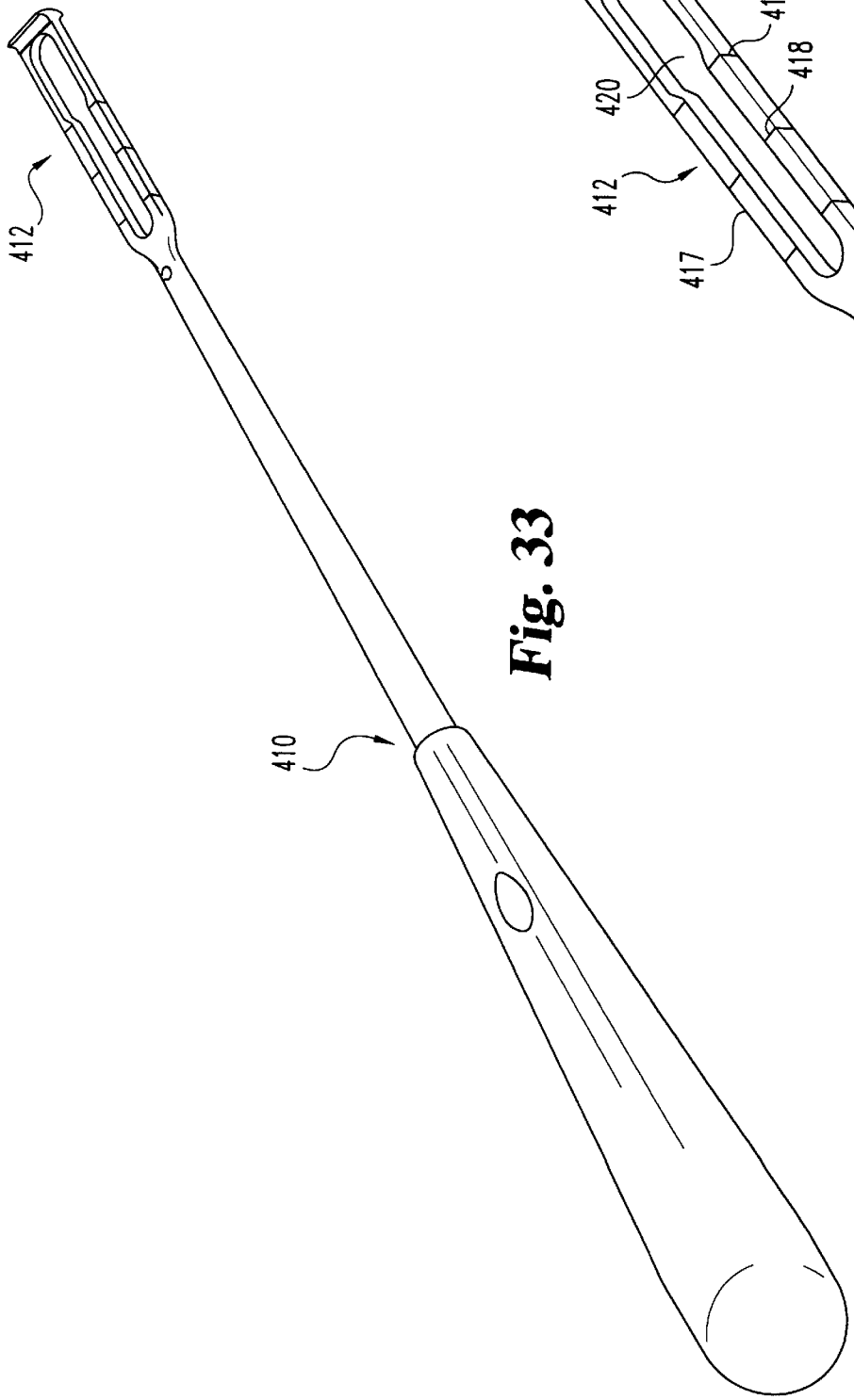

Fig. 33

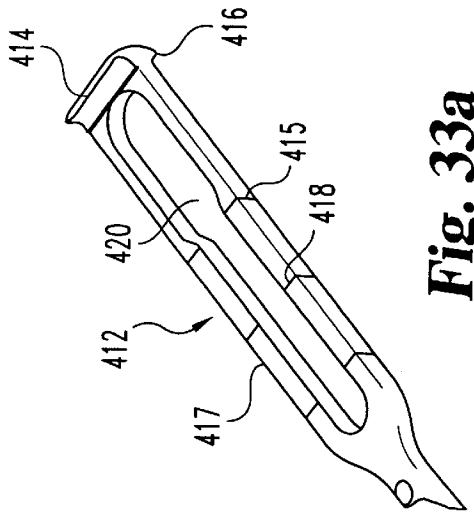

Fig. 33a

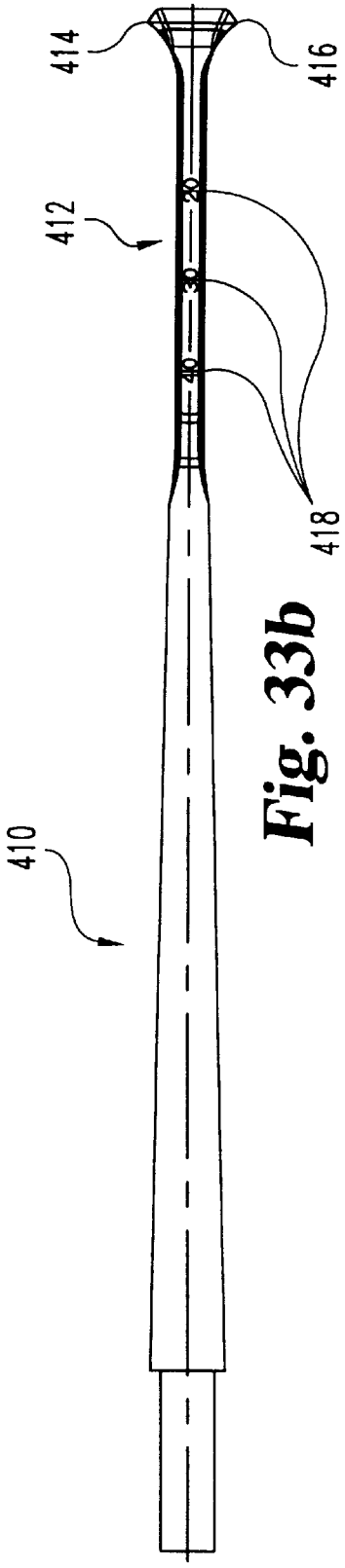

Fig. 33b

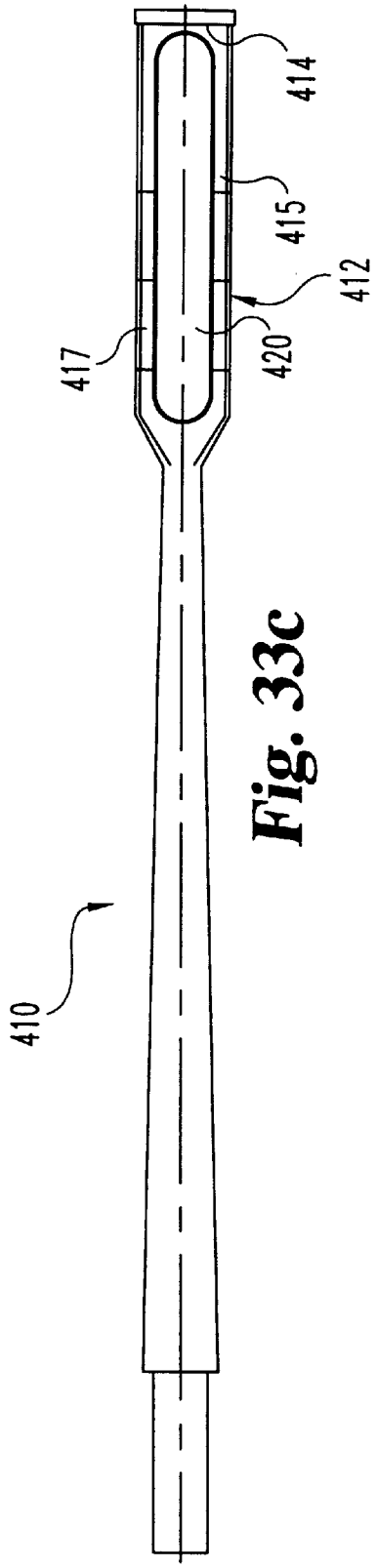

Fig. 33c

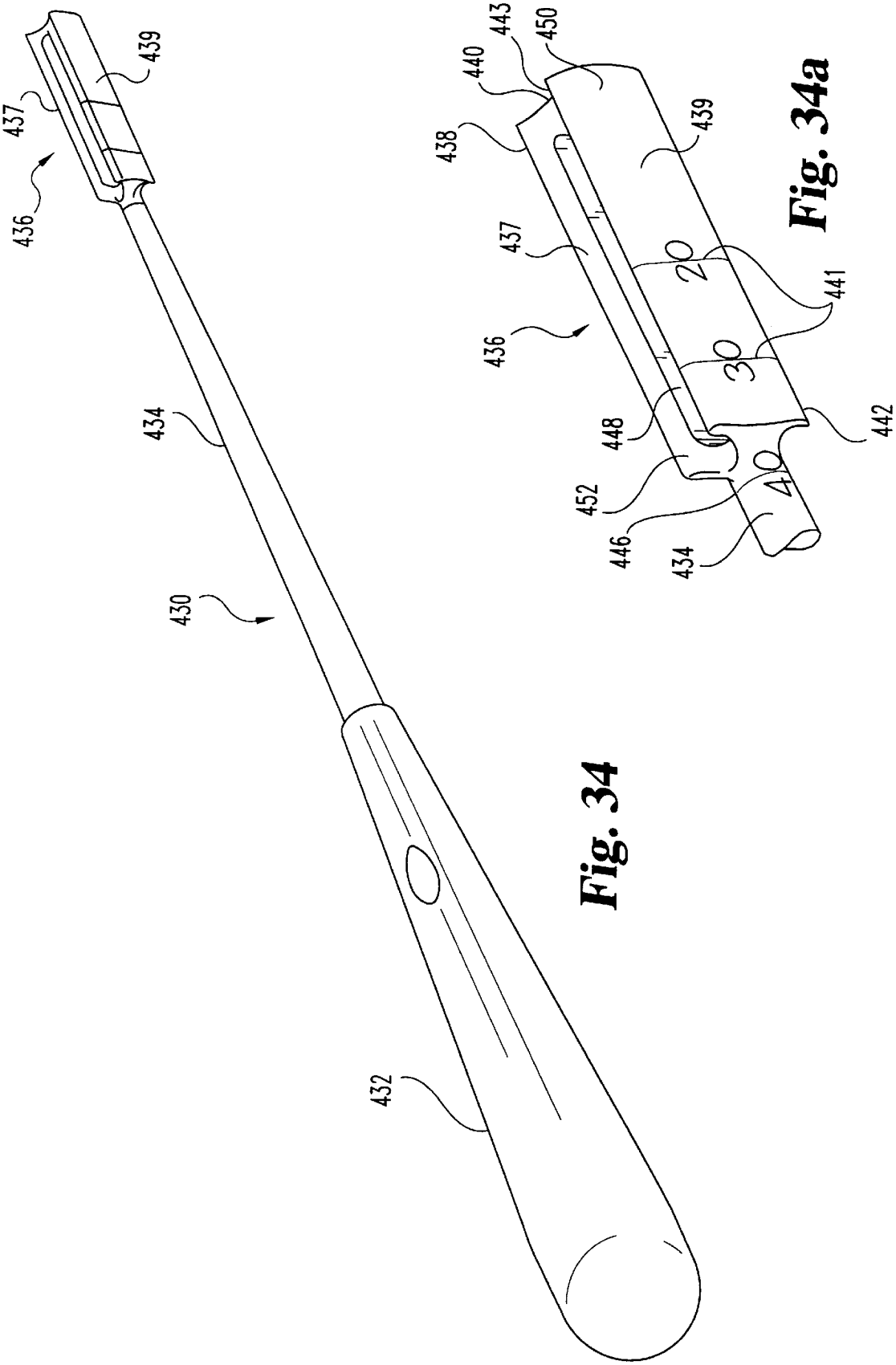

Fig. 34a

Fig. 34

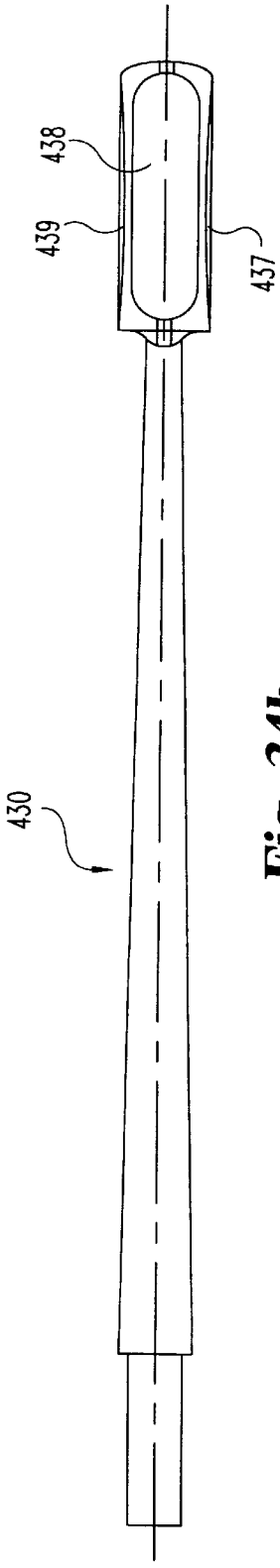

Fig. 34b

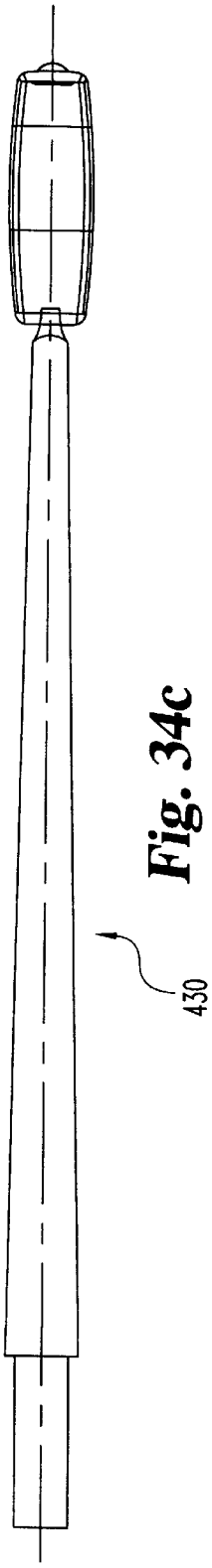

Fig. 34c

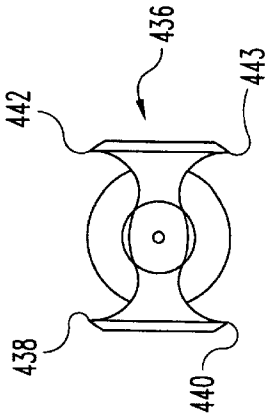

Fig. 34d

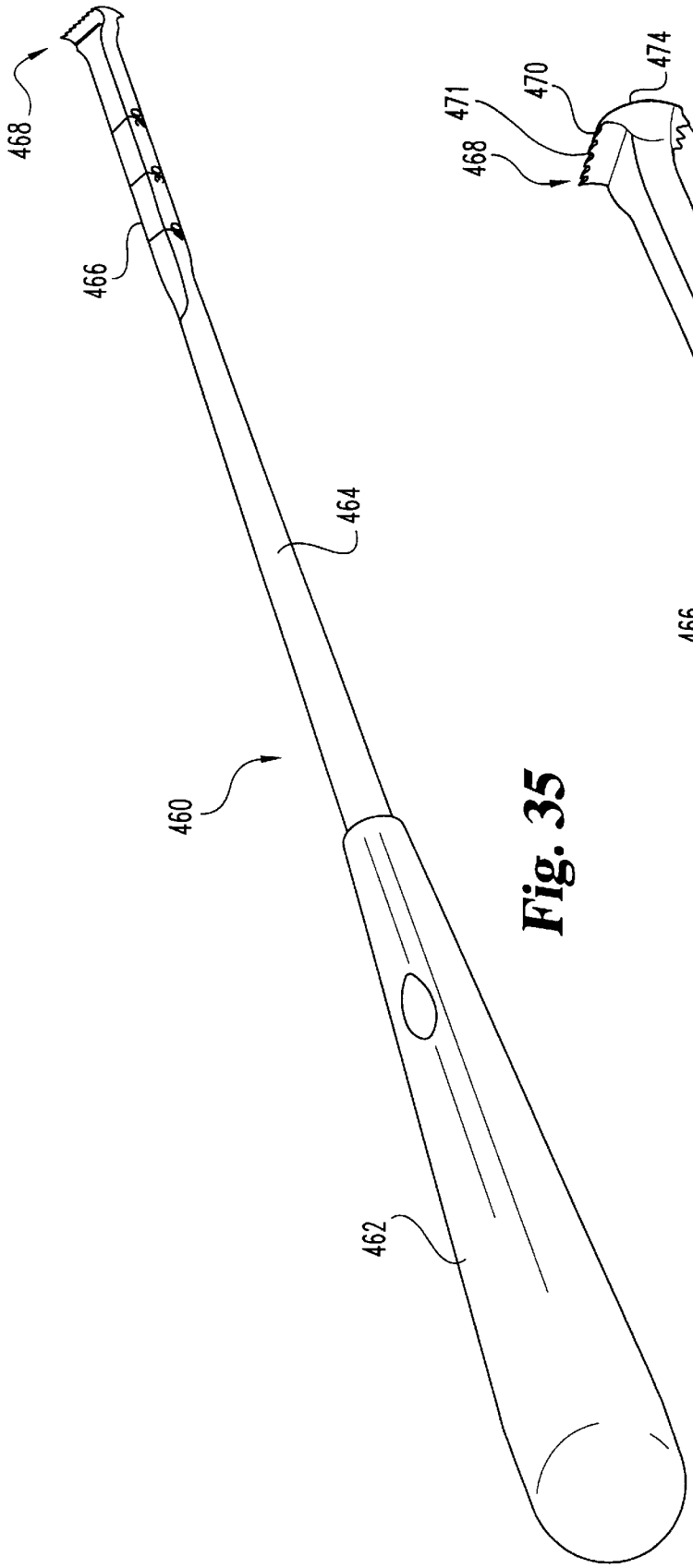

Fig. 35

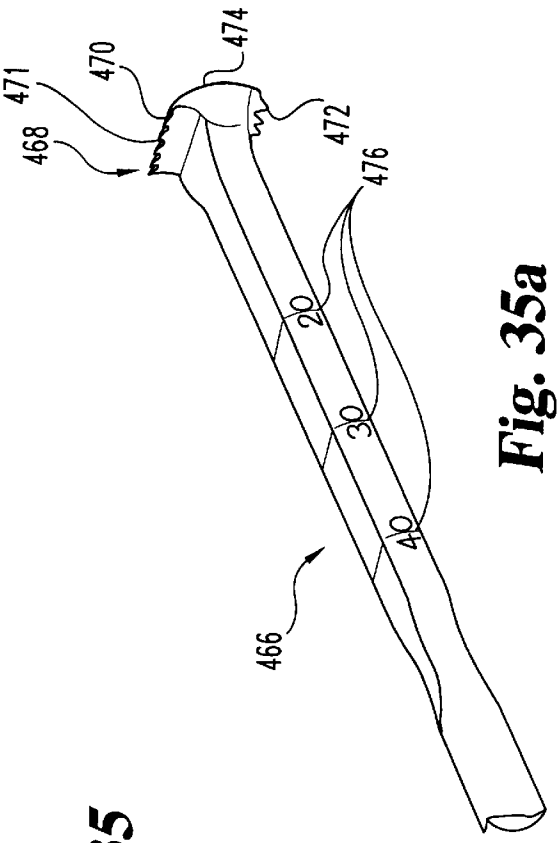

Fig. 35a

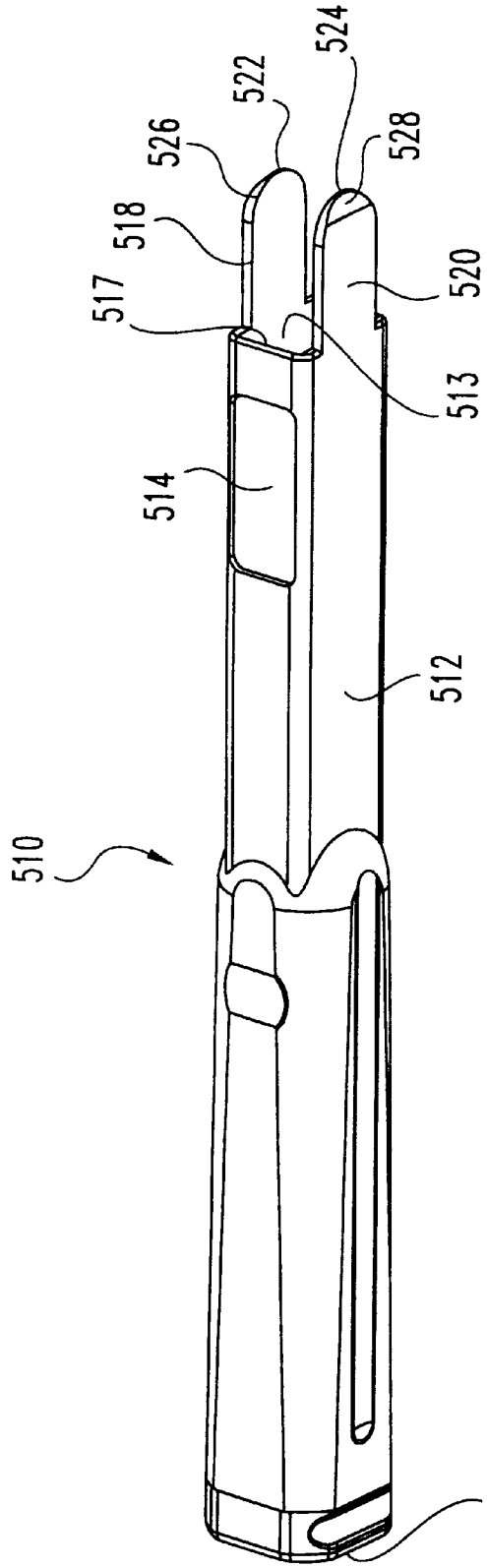

Fig. 36

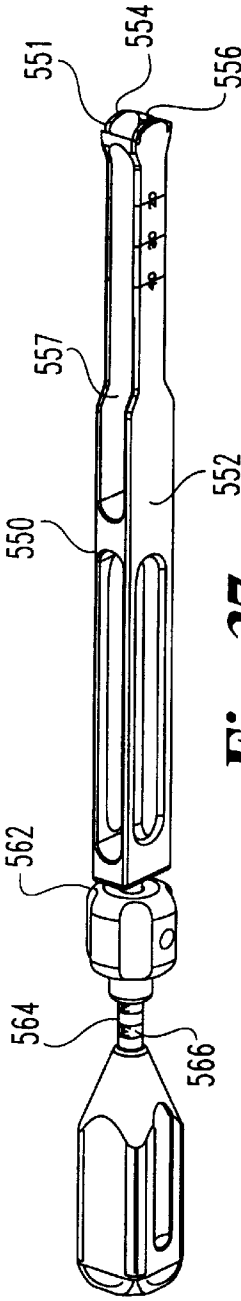

Fig. 37a

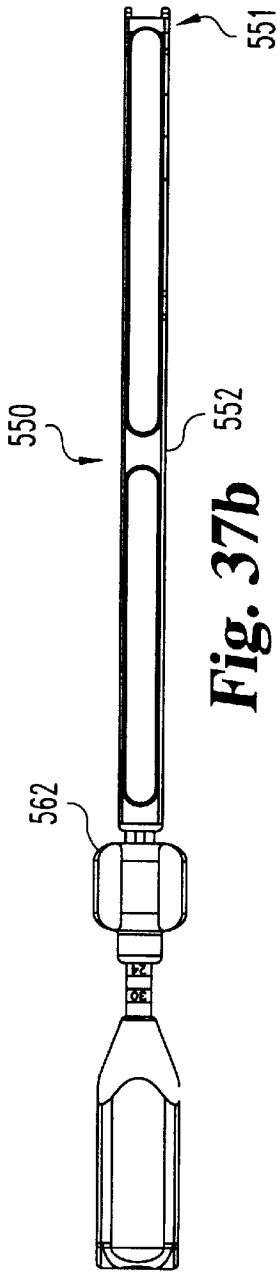

Fig. 37b

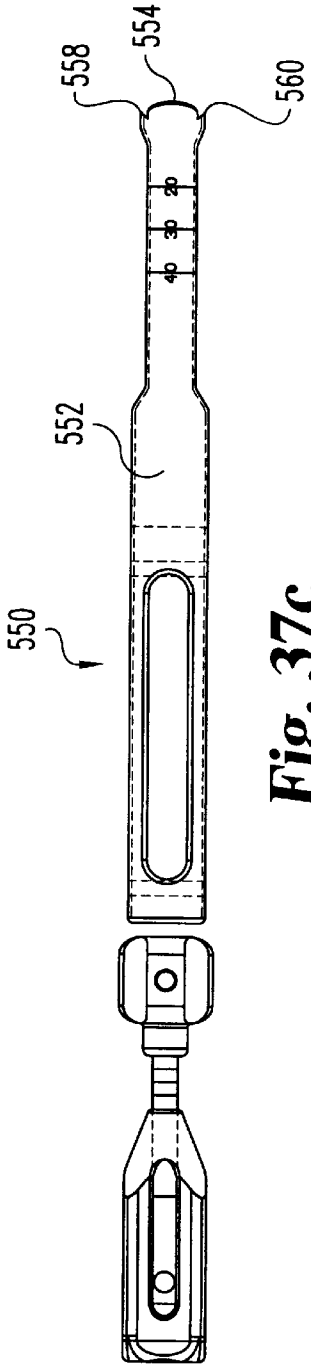

Fig. 37c

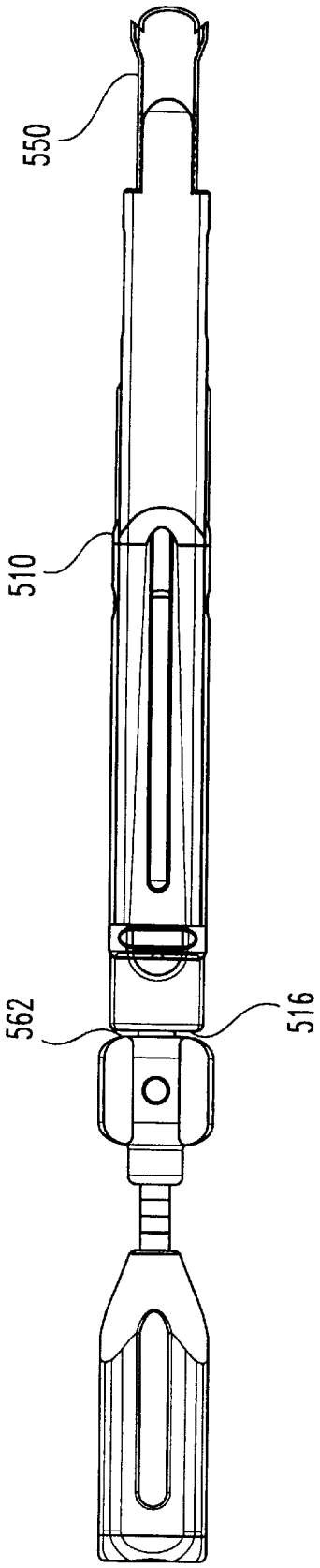

Fig. 38

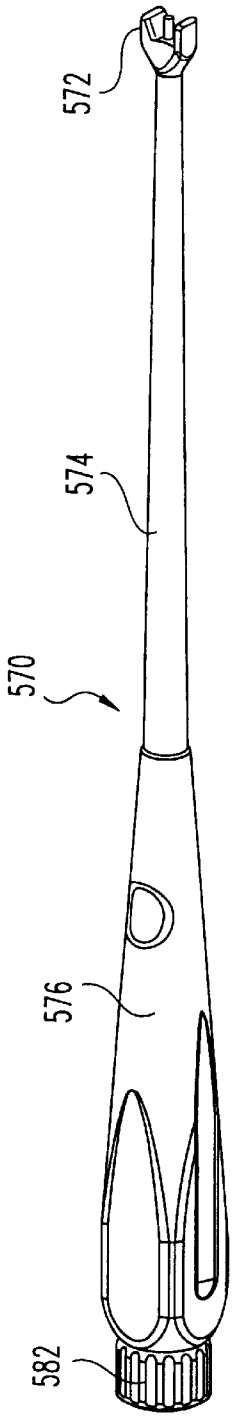

Fig. 39a

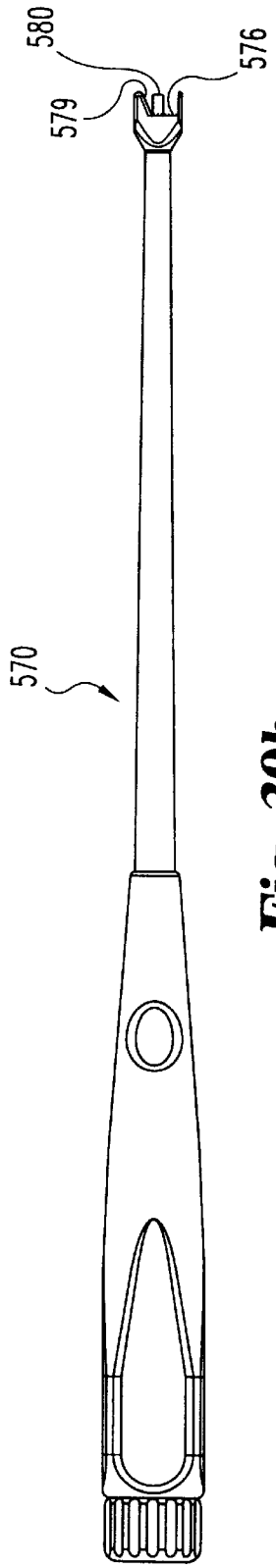

Fig. 39b

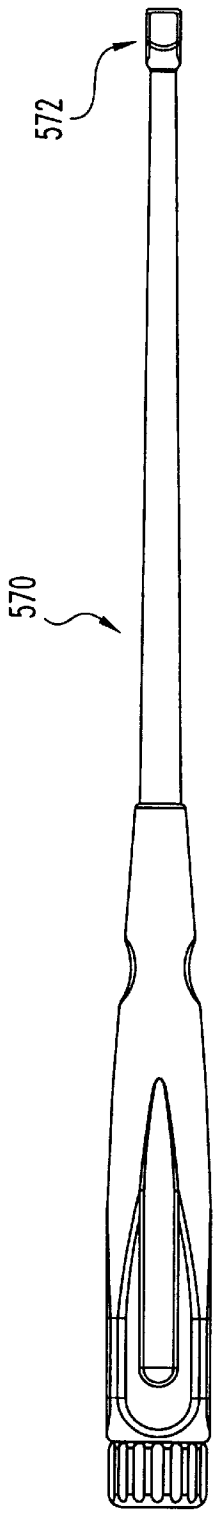

Fig. 39c

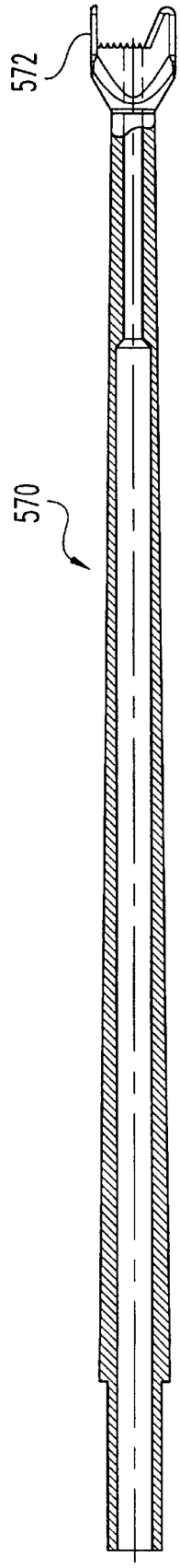

Fig. 39d

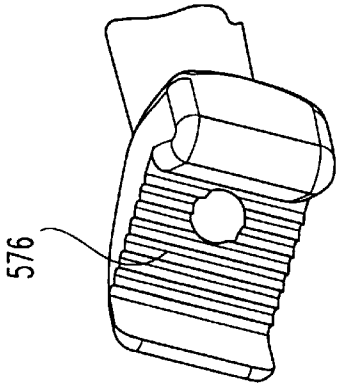

Fig. 39f

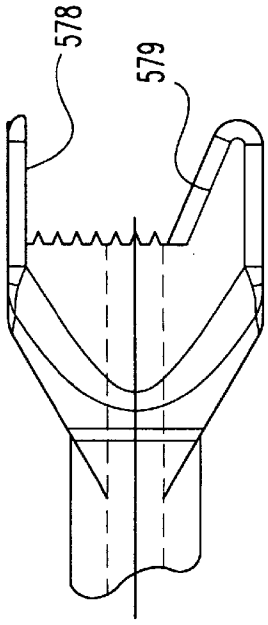

Fig. 39e

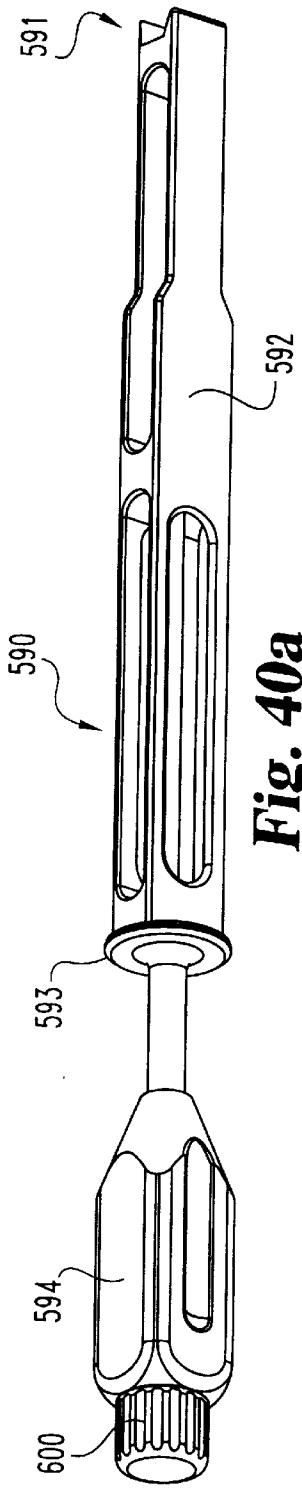

Fig. 40a

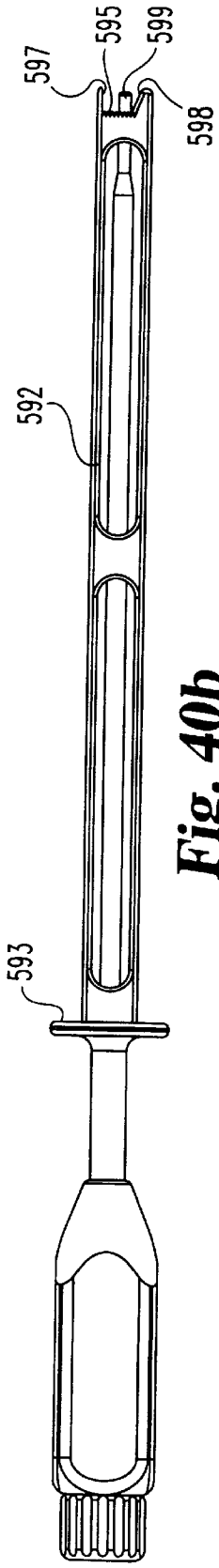

Fig. 40b

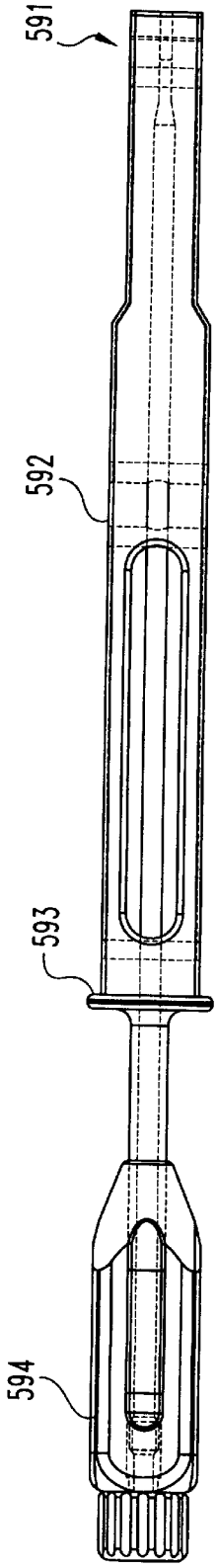

Fig. 40c

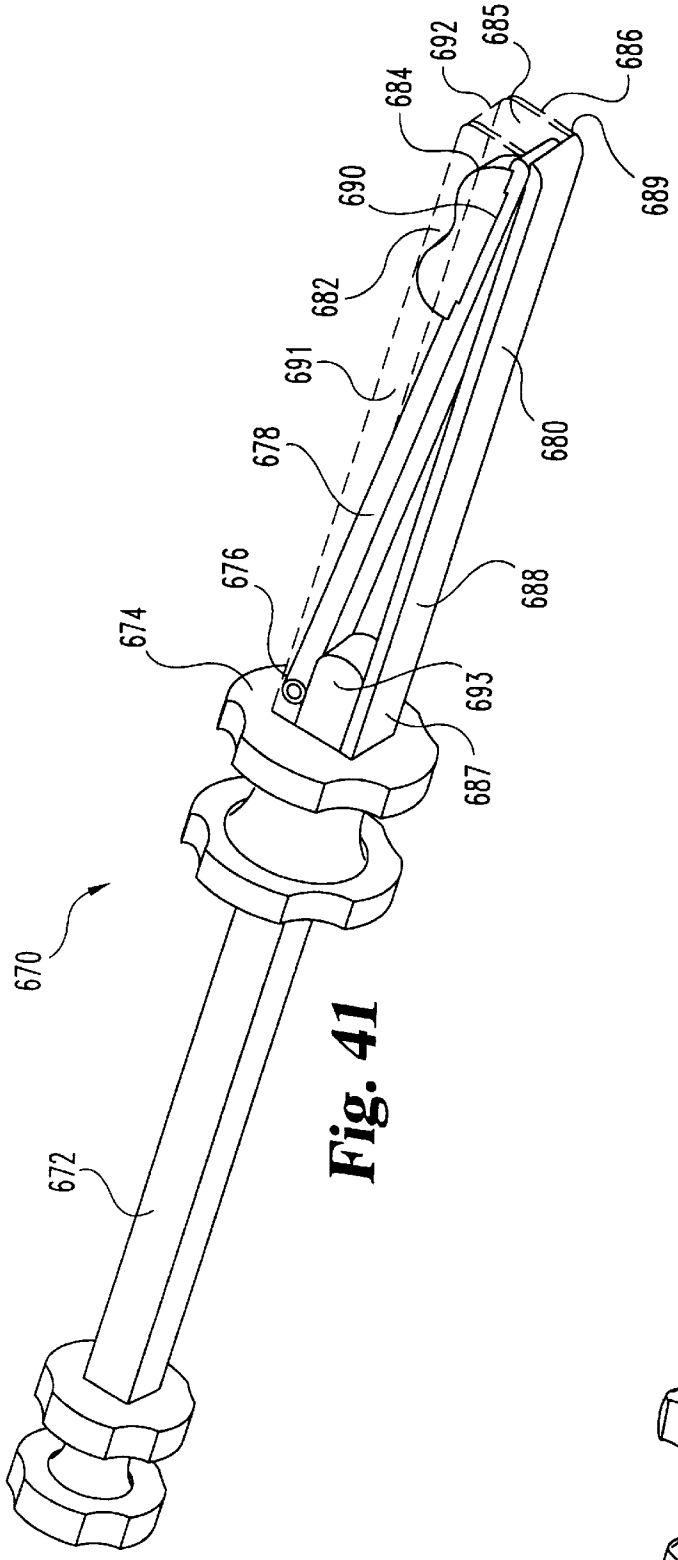
670
672
674
676
678
682
684
685
686
687
688
689
690
691
692
693
680

Fig. 41

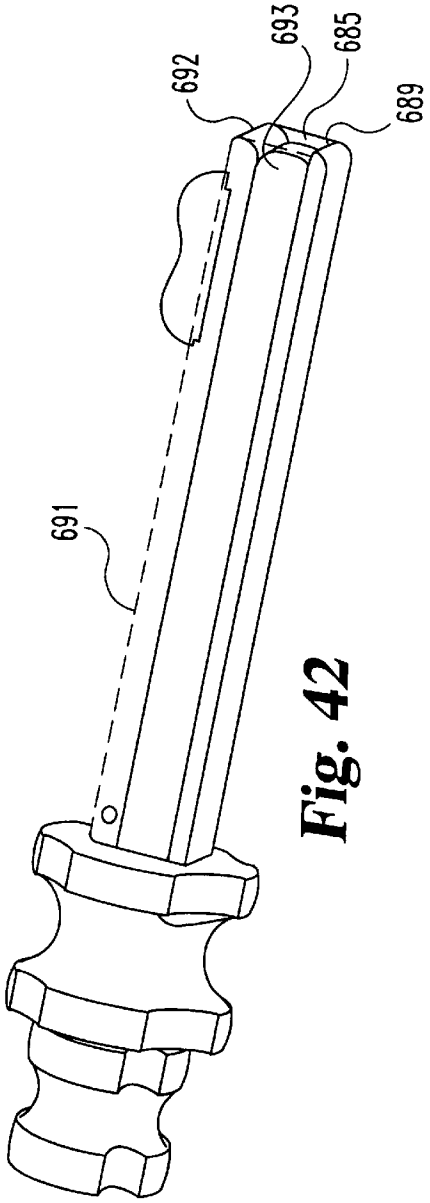
691
692
693
685
689

Fig. 42

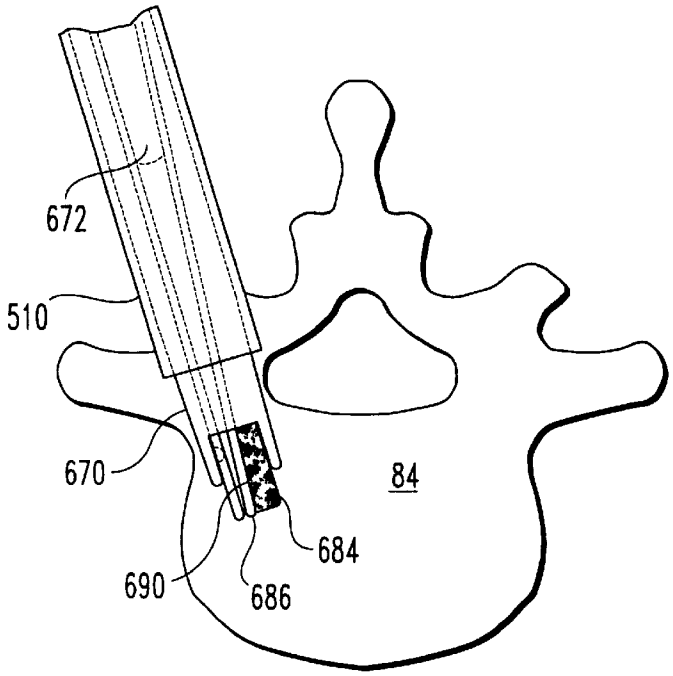

Fig. 43a

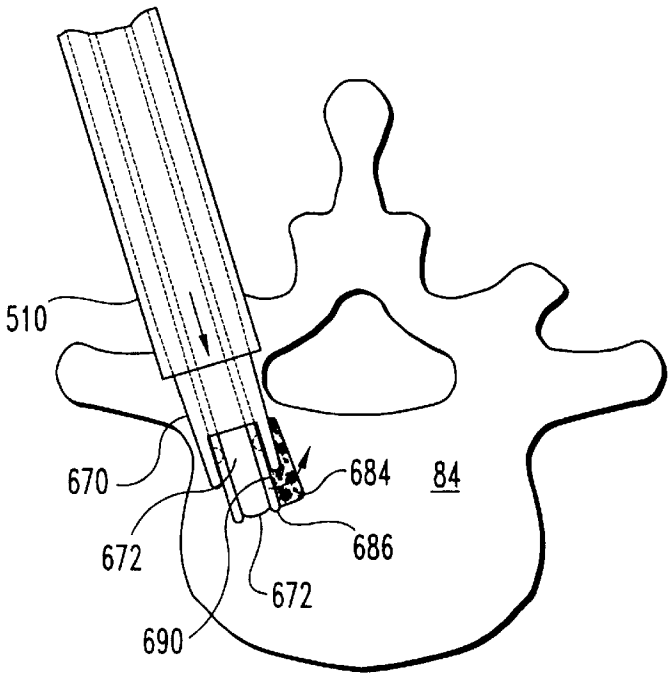

Fig. 43b

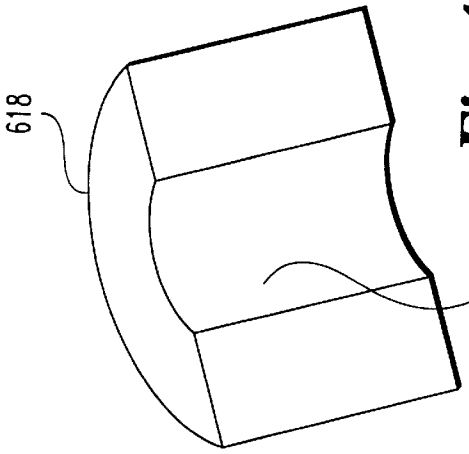

Fig. 46

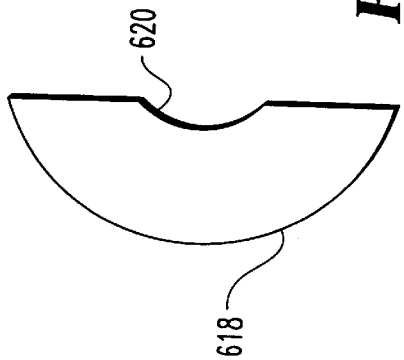

Fig. 45

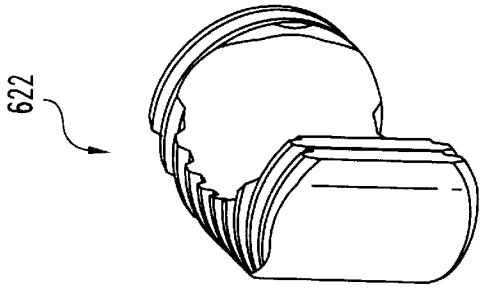

Fig. 46a

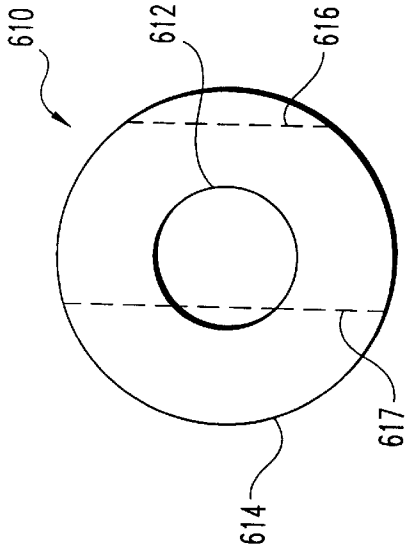

Fig. 44a

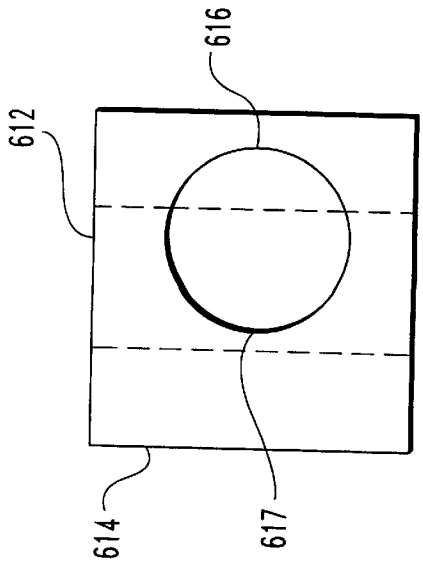

Fig. 44b

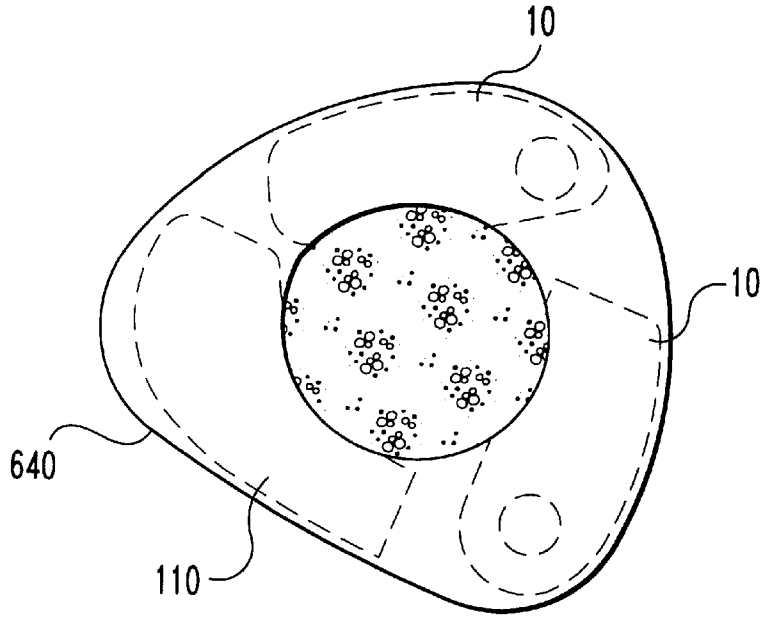

Fig. 47

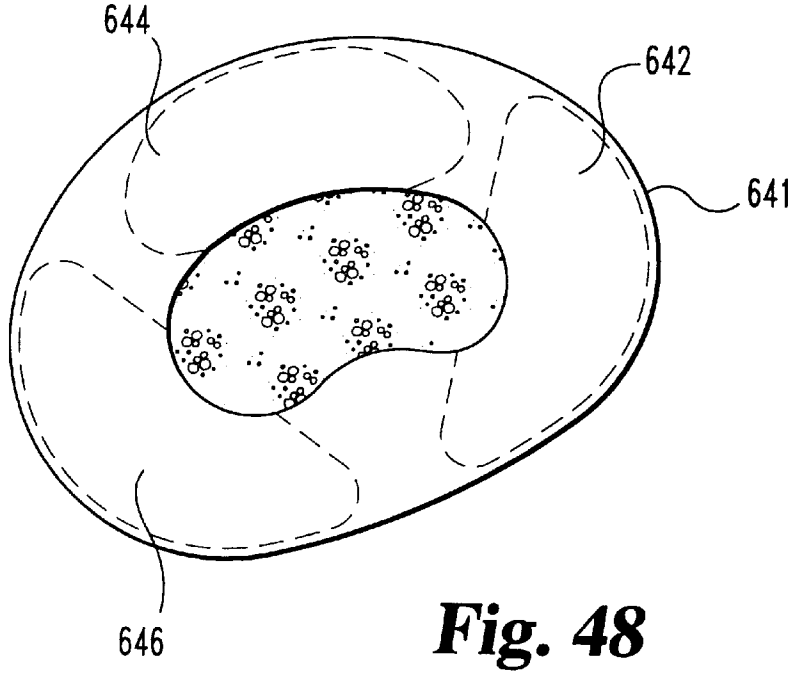

Fig. 48

INTERBODY FUSION GRAFTS AND INSTRUMENTATION

FIELD OF THE INVENTION

The present invention relates to implants for use in lumbar interbody fusion procedures and instruments for performing such procedure. More specifically, this invention relates to implants formed from donor bone that are useful to restore disc height and promote bone fusion after discectomy and to instruments and methods for preparing the intervertebral space and inserting the implant into an intervertebral space.

BACKGROUND OF THE INVENTION

One of the leading causes of lower back pain and disability results from the rupture or degeneration of one or more lumbar discs in the spine. Pain and instability are caused by compression of the spinal nerve roots because the damaged discs protrude into the vertebral canal and do not provide sufficient biomechanical support for the full range of vertebral motion. Normally intervertebral discs, which are located between endplates of adjacent vertebrae, stabilize the spine and distribute forces between the vertebrae and cushion vertebral bodies. An intervertebral disc includes a semi-gelatinous component—the nucleus pulposus, and a fibrous ring—the annulus fibrosis. The spinal discs may be displaced or damaged due to trauma, disease or aging. A herniated or ruptured annulus fibrosis may result in nerve damage, pain, numbness, muscle weakness, and even paralysis. Furthermore, as a result of the normal aging processes, discs dehydrate and harden, thereby reducing ihe disc space height and producing instability of the spine and decreased mobility.

Not all patients with damage or spinal deformities require surgical intervention. However, patients who have failed to respond to conservative treatment and who have demonstrable disc pathology often require surgical correction. Most typically the surgical correction includes a discectomy (surgical removal of a portion or all of the intervertebral disc). Discectomy is often followed by fusion of the adjacent vertebrae. To alleviate the pain, abnormal joint mechanics, premature development of arthritis, and nerve damage, the disc space vacated by the damaged disc must be preserved following discectomy. Therefore, spacers or implants are required between the vertebrae that were adjacent to the resected disc.

Current treatment methods have been unable to accurately control the endplate removal using conventionally designed chisels, scrappers and cutters. Use of conventional surgical instruments does not adequately control the depth of cut into the disc space nor provide a means to accurately the countersink the implant into the prepared cavity—particularly for non threaded impacted. Furthermore, current methodologies do not provide sufficient protection of the neural structures during surgery to prevent neural injury

Current treatment methods utilize grafts, either bone or artificial implants, to fill the intervertebral space between adjacent vertebrae. It is desirable that these implants not only fill the disc space vacated by the damaged disc, but also restore the disc space height to pre-damaged condition. An implant must be sufficiently strong to bear substantially all the body's weight above the vertebral space where it is inserted. Furthermore, it is desirable to use the implants to promote fusion of the adjacent vertebrae across the disc space and thereby promote mechanical stability. Current methodologies use implants or spacers made of metal, plastic composites or bone. Use of bone implants offers

several advantages over artificial spacers or implants. The bones provide an implant having a suitable modulus of elasticity that is comparable to that of the adjacent vertebrae. The bone implants can be provided with voids, which can be packed with cancellous bone or other osteogenic material to promote bone growth and eventual fusion between adjacent vertebrae. Furthermore, implants formed from cortical bone have sufficient compressive strength to provide a biomechanically sound intervertebral spacer while it is slowly being incorporated or absorbed by the body and substituted for the patient's own bone tissue—colloquially referred to as "creeping substitution."

While it is desirable to use natural bone grafts as implants, use of bone is often limited because of a small supply of suitable sources. Xenografts from non-humans, animals, suffer from rejection problems once implanted. While measures are being taken to limit the human body's rejection of xenografts, greater success is still achieved with bone obtained from human sources. The best source is an autograft from the patient receiving the graft. Removal of an autograft requires further surgery and is limited in amount and structural integrity by the patient's anatomy. The alternative source of human bone grafts is allografts harvested from human donors. Since the number of people donating tissue to science is small, these bone grafts represent an extremely valuable and rare commodity. Current methodologies for providing cortical bone implant spacers typically require cutting the spacer, usually in the form of a dowel, from the diaphysis of a long bone. Only a certain portion of the diaphysis is sufficiently thick to provide dowels with requisite strength to maintain the intervertebral space. For example, in a human femur only about the middle third of the diaphysis, where the shaft is narrowest and the medullary canal is well formed, has sufficient bone wall thickness and density to be used to prepare cortical dowels. The suitable portions of the diaphysis are sliced, and then a plug is cut from each slice. The plugs are then machined to form a dowel. Most often the dowel includes the medullary canal to provide a depot for osteogenic material and promote fusion of the adjacent vertebrae. Much of the donor bone is wasted, particularly the remnants of the slices from the diaphysis used to provide the dowels as well as the end portions of the long bone which cannot be utilized. Above and below this middle section of the diaphysis, the walls of the femur bone become thinner because of the separation of the layers of the bone into cancelli. Thus, these portions of the femur are not considered suitable for forming cortical dowels having the required dimensions for inserting into vertebral spaces. Use of these remnants would provide a more efficient use and conservation of a limited and very valuable natural resource of cortical bone.

Thus, there remains a need for improved bone graft implants and instruments for their placement in the body.

SUMMARY OF THE INVENTION

Thus, there is provided with the present invention an implant prepared from bone. The implant has a shaped body and sufficient length to extend from an anterior portion of a vertebral body to a posterior portion and a height sufficient to separate adjacent vertebrae. The implant comprises a bone portion having an upper and lower bone engaging surface, a first sidewall and an opposite second sidewall. The first and second sidewalls extend between the upper and lower bone engaging surfaces. Furthermore, the first sidewall includes a portion defined by a concave surface. Preferably, the implant also includes a recessed region that serves as a depot or receptacle for deposition of osteogenic material to enhance

bone growth and eventual fusion of the adjacent vertebrae. One end of the implant is provided with structural features to engage an implant holder; in a preferred embodiment, the other end of the implant is provided with a shape to ease insertion into the intervertebral space. The implant prepared according to the present invention has sufficient biomechanical support to maintain the desired intervertebral space while it is gradually being replaced with new bone growth. In specific embodiments of the present invention, the implant is provided in the form of a J-shape; in other specific embodiments the implant is provided in the form of a crescent shape.

There is also provided in accordance with the present invention an implant holder. The implant holder includes a gripping head for releasably securing the implant. Preferably the impact holder also includes an impacting surface for driving the implant into a preformed cavity in the intervertebral space. The gripping head includes at least one implant engaging structural feature, such as a pin. Optimally, the pin includes at least a radiopaque portion to provide a means for viewing placement of the implant via radiography during surgery. In one embodiment, the gripping head on the implant includes a surface preferably roughened or knurled to secure the implant into the preformed cavity. In another embodiment of the present invention, the implant holder including the gripping head includes at least two surfaces. Each of the surfaces includes a pin that releasably secures the implant to the gripping head by matingly engaging recesses in the implant. The implant holder of the present invention securely holds the implant so that it can be impacted into the preformed cavity in the intervertebral space and then releases the implant so it remains in the cavity.

There is also provided in the present invention instruments for preparing an intervertebral space for receiving the final fusion implant. The instruments include a chisel for preparing the intervertebral space to receive the implant, preferably by cutting a cavity in the opposing endplates of adjacent vertebrae. The bone chisel includes at least two cutting edges. The bone chisel also includes opposing curved surfaces extending distally beyond the cutting surface to center the chisel and the cutting edges between the opposing surfaces of adjacent vertebrae. When the chisel and cutting blades are centered between the opposing surfaces, the blades cut equally from both surfaces.

Other instruments included for use in the present invention include scrapers, rotating scrapers, and impacting or "slap" hammers for driving the implants into position. The slap hammer allows for controlled impacting force and removal of the chisel after cutting.

Another aspect of the present invention includes a nerve retractor blade assembly for manipulation of neural structures such as the dural sac and traversing nerve root with minimal trauma to the respective structures. The assembly includes a retractor having a channel adapted to receive a retractor blade, a retractor blade and can include at least one pin, preferably two pins, for securely fixing the positioning of the retractor assembly and blade proximal to the intervertebral space. The blade can be adapted for engagement with the retractor and for extending into the intervertebral space to provide anchorage proximal to the disc space, maintain disc height and maintain distraction. The nerve retractor also includes a handle attached at an angle to the channel. In a preferred embodiment, the retractor channel is provided in the form of a concave channel. It is also contemplated that the retractor channel can be formed in a variety of other shapes, for instance, rectangular and broadened V-shaped channels are also included within the present invention.

Yet another aspect of the present invention includes a protective guide sleeve. The protective sleeve includes a body having a hollow core for receiving instruments for performing surgery. In addition, the protective sleeve provides a narrow but unobstructed passageway to the intervertebral space and minimizes the area of tissue impacted by the surgery. Preferably the protective sleeve includes a first and a second distractor fin that can be inserted into the intervertebral space to maintain the space height and alignment of the vertebrae. The protective sleeve provides protection for neural structures and prevents encroachment of the neural structures into the surgical area. The protective sleeve allows use of depth stop on surgical tools. Preferably, the protective sleeve includes at least one window to facilitate visualization. The instruments for preparing and inserting spinal fusion implants can be received within the protective sleeve. Such instruments include the implant holder engaged to an implant, the bone chisel, scrapers, and drills provided in the present invention.

Accordingly, it is one object of the present invention to provide an improved implant of bone to maintain an intervertebral space after discectomy.

It is another object of the present invention to provide an implant holder to releasably secure the implant and facilitate impaction of the implant into position within the intervertebral space.

It is still another object of the present invention to provide a cutting chisel to prepare a cavity in the intervertebral space between two opposing adjacent endplates on vertebrae.

It is yet another object of the present invention to provide a retractor for manipulation of neural structures.

Further objects, features, benefits, aspects and advantages of the present invention shall become apparent from the detailed drawings and descriptions provided herein.

BRIEF DESCRIPTION OF THE DRAWINGS

FIG. **1** is a perspective view of one embodiment of an implant according to the present invention.

FIG. **2** is a side view of the implant of FIG. **1**.

FIG. **2***a* is an enlarged view of a portion of the side of the implant of FIG. **2** illustrating the ridges for engaging bone.

FIG. **3** is a top elevated view of the spacer of FIG. **1**.

FIG. **4** is an end view of the tool engaging end of the implant of FIG. **1**.

FIG. **5** is a side sectional view of an implant revealing the tool receiving slots and recesses.

FIG. **6** is an end view of the insertion end of implant of FIG. **1**.

FIG. **7** is an elevated top view of one embodiment of an implant holder according to the present invention.

FIG. **8** is an end view of the implant holder of FIG. **7**.

FIG. **9** is a side view of the implant holder of FIG. **7**.

FIG. **10** is a perspective view of the holder of FIG. **7**.

FIG. **11** is a cutaway view of an intervertebral space that includes an implant seated within the intervertebral space and seating a second implant using the implant holder of FIG. **7**.

FIG. **11***a* is a cutaway view of an intervertebral space that includes an crescent shaped implant seated within the intervertebral space and seating a second implant using an implant holder.

FIG. **12** is a perspective view of an alternative embodiment of a J-shaped implant according to the present invention.

FIG. **13** is side view of the implant of FIG. **12**.

FIG. **14** is an elevated top view of the implant of FIG. **12**.

FIG. **15** is an end view illustrating the tool attachment end of the implant of FIG. **12**.

FIG. **16** is an end view illustrating the insertion end of the implant of FIG. **12**.

FIG. **17** is an elevated top view of an alternative embodiment of an implant holder according to the present invention for use with the implant of FIG. **12**.

FIG. **17***a* is an enlarged view of a gripping head of the implant holder of FIG. **17**.

FIG. **18** is a side view of the implant holder of FIG. **17**.

FIG. **18***a* is an enlarged top view of the gripping head of implant holder of FIG. **17**.

FIG. **18***b* is a first end view of the implant holder of FIG. **17**.

FIG. **19** is a side view of the implant of FIG. **12** engaged in the implant holder of FIG. **17**.

FIG. **20***a* is an elevated top view of the implant of FIG. **12** engaged in the implant holder of FIG. **17**.

FIG. **20***b* is a first end view of the implant of FIG. **12** engaged in an implant holder of FIG. **17**.

FIG. **21** is a perspective view of an implant of FIG. **12** engaged in an implant holder of FIG. **17**.

FIG. **22** is a perspective view of another alternative embodiment of a crescent-shaped implant according to the present invention.

FIG. **23** is a perspective view of another alternative embodiment of an implant holder according to the present invention.

FIG. **23***a* is an enlarged perspective view of the gripping head of the implant holder of FIG. **23**.

FIG. **24** is a perspective view of the implant of FIG. **22** engaged in the implant holder of FIG. **23**.

FIG. **25** is a perspective view of one embodiment of a chisel according to the present invention.

FIG. **25***a* is an enlarged perspective view of the cutting head of the chisel of FIG. **25**.

FIG. **25***b* is a side sectional view of three lumbar vertebrae and the chisel of FIG. **25** as it is initially inserted into the intervertebral space.

FIG. **25***c* is a side sectional view of three lumbar vertebrae and the chisel of FIG. **25** cutting the opposing surfaces of adjacent vertebrae.

FIG. **25***d* is a side sectional view of three lumbar vertebrae and the chisel of FIG. **25** after completing the initial cavity formation in the intervertebral space.

FIG. **26** is a perspective view of a bone shaver according to the present invention.

FIG. **26***a* is a perspective view of the cutting head of the bone shaver of FIG. **26**.

FIG. **27** is a perspective view of one embodiment of a slap hammer for use with the present invention.

FIG. **28** is a perspective view of one embodiment of a nerve retractor assembly according to the present invention.

FIG. **29** is a perspective view of a retractor holder illustrated in FIG. **28**.

FIG. **29***a* is a partial perspective view of the back of the support blade for the retractor of FIG. **29**.

FIG. **30** is a perspective view of the retractor blade for the retractor of FIG. **29**.

FIG. **30***a* is a partial perspective view of the lead tip of retractor blade in FIG. **30**.

FIG. **31** is a perspective view of one embodiment of a distractor for use with the present invention.

FIG. **31***a* is a partial perspective view of the distractor tip of the distractor depicted in FIG. **31**.

FIG. **32** is a perspective view of a round scraper for use in the present invention.

FIG. **32***a* is a partial perspective view of the scraper head of the round scraper depicted in FIG. **32**.

FIG. **32***b* is a side view of the round scraper of FIG. **32**.

FIG. **32***c* is an elevated top view of the round scraper of FIG. **32**.

FIG. **32***d* is a partial perspective view of the scraper head of the round scraper of FIG. **32**.

FIG. **32***e* is an elevated top view of the scraper head of the round scraper of FIG. **32**. FIG. **32**.

FIG. **32***f* is a side view of the scraper head of the round scraper of FIG. **32**.

FIG. **33** is a perspective view of a plane scraper for use in the present invention.

FIG. **33***a* is a partial perspective view of the scraper head of the plane scraper depicted in FIG. **33**.

FIG. **33***b* is a side view of the plane scraper of FIG. **33**.

FIG. **33***c* is an elevated top viewof the plane scraper of FIG. **33**.

FIG. **34** is a perspective view of a rotatable cutter for use with the present invention.

FIG. **34***a* is a partial perspective view of the cutting head of the rotatable cutter depicted in FIG. **34**.

FIG. **34***b* is an elevated top view of the rotatable cutter of FIG. **34**.

FIG. **34***c* is a side view of the rotatable cutter of FIG. **34**.

FIG. **34***d* is a first end view of the rotatable cutter of FIG. **34**.

FIG. **35** is a perspective view of a toothed scraper for use according to the present invention.

FIG. **35***a* is a partial perspective view of the cutting head of the toothed scraper depicted in FIG. **35**.

FIG. **36** is a perspective view of one embodiment of a guide sleeve for receiving surgical instruments and implantation instruments of the present invention.

FIG. **37***a* is a perspective view of an alternative embodiment of a chisel for use in the present invention.

FIG. **37***b* is an elevated top view of the chisel in FIG. **37***a*.

FIG. **37***c* is a side view of the chisel in FIG. **37***a*.

FIG. **38** is a side view of the chisel depicted in FIG. **37***a* received inside the guide sleeve depicted in FIG. **36**.

FIG. **39***a* is a perspective view of an alternative embodiment of an implant holder.

FIG. **39***b* is an elevated top view of the implant folder depicted in FIG. **39***a*.

FIG. **39***c* is a side view of the implant holder depicted in FIG. **39***a*.

FIG. **39***d* is a cross-sectional view of the implant depicted in FIG. **39***a*.

FIG. **39***e* is an enlarged view of the gripping head of the implant depicted in FIG. **39***a*.

FIG. **39***f* is a perspective end view of the gripping head of the implant depicted in FIG. **39***a*.

FIG. **40***a* is a perspective view of an implant inserter according to the present invention.

FIG. **40***b* is an elevated top view of the implant inserter depicted in FIG. **40**A.

FIG. **40***c* is a side view of the implant inserter depicted in FIG. **40**A.

FIG. **41** is a perspective cutaway view of a bone graft loader according to the present invention.

FIG. **42** is a perspective cutaway view of the bone graft loader of FIG. **41** as the piston has been received in the loader shaft.

FIG. **43***a* is a cutaway view of an intervertebral space that includes a bone graft loader of FIG. **41** loaded with osteogenic material received within a protective sleeve and the intervertebral space.

FIG. **43***b* is a cutaway view of an intervertebral space and the implant holder of FIG. **41** delivering osteogenic material into the intervertebral space.

FIG. **44***a* is a top sectional view of an idealized diaphysis section of a long bone and the section needed for forming a cortical bone dowel.

FIG. **44***b* is a side view of an idealized section from the diaphysis of a long bone indicating the medullary canal and the portion of the bone needed for forming a cortical bone dowel of the prior art.

FIG. **45** is an elevated top view of the remnant of the bone section from FIG. **41***b*.

FIG. **46** is a perspective view of the bone remnant from FIG. **41***b*.

FIG. **46***a* is a perspective view of a cortical bone dowel formed from the diaphysis section of **44***a*.

FIG. **47** is a top sectional view of an upper portion of the diaphysis of a humeral shaft.

FIG. **48** is a top sectional view of an upper portion of the diaphysis of a tibial shaft.

DETAILED DESCRIPTION OF THE PREFERRED EMBODIMENTS

For the purposes of promoting an understanding of the principles of the present invention, reference will now be made to the embodiments illustrated in the drawings and specific language will be used to describe the same. It will nevertheless be understood that no limitation of the scope of the invention is intended thereby. Any alterations and further modification in the described processes, systems, or devices, and any further applications of the principles of the invention as described herein are contemplated as would normally occur to one skilled in the art to which the invention relates.

This invention provides bone implants for insertion into the intervertebral spaces between adjacent vertebrae following discectomy. The bone implants are useful for maintaining and/or restoring a desired spacing between adjacent vertebrae. The bone implants of the present invention include a recessed area that serves as a depot for receiving osteogenic material, thereby enhancing bone ingrowth and fusion of the adjacent vertebrae. The implants of the present invention are designed to conserve donor bone material without compromising necessary biomechanical properties of the implant to support the forces generated at the implantation level. Multiple implants according to the present invention may be formed from a single donor bone. Further, the implants according to the present invention may be obtained from remnants of donor bone utilized to form alternative implants and from the upper and lower end portions of the diaphysis of long bones lacking the required properties for cylindrical dowels, collectively referred to herein as "remnants." Preferably, each implant includes at least a portion influenced by the shape of the medullary canal. Preferably, the medullary canal is included as a curved surface in the body of the implant that can serve as a depot for osteogenic material. Optimally, the design of the implant includes surface features which inhibit expulsion of the implant from the preformed cavity.

Referring now to FIG. **1** through FIG. **6**, one embodiment of an implant according to the present invention is illustrated. Implant **10** includes body **11** having a concave surface **14** that defines a recessed area **15** into body **11**. Implant **10** further includes a tool attachment end **32** adapted for engagement with an implant holder. Tool attachment end **32** can include a variety of recesses, receptacles, grooves, slots, projections, and other supporting members to engage corresponding surface features on an implant holder. Implant **10** also includes an insertion end **17**. On the implant illustrated in FIGS. **1–6**, the insertion end is defined by curved surface **18**. It is understood that curved surface **18** can also include surfaces having a uniform and non-uniform curvature and tapered ends for increasing the ease of insertion of the implant into the intervertebral space.

Body **11** of implant **10** is substantially elongated and defines a longitudinal axis **19**. The length of the implant **11** is sufficient to provide sufficient support and stability to the spinal column. Typically the implant has a length of about 21 mm to about 27 mm, more preferably, about 22 to about 26 mm. When viewed from the side, the height of implant **10** can be substantially uniform for its entire length, which lies parallel to the longitudinal axis. Alternatively, as illustrated in FIG. **2**, the height of implant **10** can vary along its length. The maximum height of implant **10** is about 11 mm to about 15 mm in height as shown by reference line **21**. The lesser height **23** of implant **10** is about 7 mm to about 11 mm. The maximum width **25** of implant **10** may not exceed the width of the bone remnants, which serve as the source of donor bone for the implants. However, the implant is formed with a sufficient maximum width to adequately support the forces generated at the site of implantation and to provide stability to the implant to inhibit rotation in the disc space. Furthermore, in preferred embodiments, the width of the implant is sufficient to withstand a downward applied compressional force of about 30,000 Newtons. The width of the implant is about 8 mm. to about 14 mm, more preferably about 10 mm to about 12 mm.

The outer surface of implant **10** can include surface features such as ridges or teeth to prevent retropulsion of the implant from the intervertebral space. Ridges **12** can be randomly or uniformly distributed about the outer surface of implant **10**. The ridges **12** can be distributed on one, two, three, or four sides of the exterior surface of implant **10**. Preferably, ridges **12** and **13** are located on the upper surface **40** and lower surface **42**, respectively. Ridges **12** and **13** are defined as an equilateral triangle defining an angle of about 50 to about 70° at the apex and having a height of about 1 mm.

Body **11** of implant **10** includes a recessed area **15** that can be used for receiving osteogenic material. One side of implant **10** includes concave surface **14** formed as a result of the medullary canal of the long bone. While concave surface **14** generally follows the contours of the medullary canal of the donor bone, it will be understood that cleaning and preparing the bone graft from the donor may slightly alter the medullary canal, thereby altering the configuration of concave surface **14**. Moreover, concave surface **14** typically resembles a portion of a cylindrical wall. However, the specific configuration of the surface may vary, depending on the shape of the medullary canal in the donor bone. Concave surface **14** defines a recessed area **15**. In addition to concave surface **14**, the implant can include other apertures such as

apertures **20** and **22**. In preferred embodiments, apertures **20** and **22** extend through implant **10** and are sized to receive a sufficient amount of an osteogenic material to promote bone ingrowth and fusion of the adjacent vertebrae.

Implant body **11** includes a substantially flat side **16** opposite concave surface **14**. Flat side **16** adjoins tool engagement end **32** and extends along the length of body **11** to abut insertion end **17**. It is understood for the purposes of this invention that flat side **16** is substantially planer. However, it is also within the scope of the present invention that flat side **16** can include a curved surface, if desired.

Tool attachment end **32** can include a variety of recesses, apertures, and other structural features to engage an implant holder. For example, as depicted in FIGS. **4** and **5**, tool engagement end can include slots **24**, **26**, first indent **28** and second indent **30**. First indent **28** and second indent **30** can be provided to matingly engage corresponding pins on an implant holder.

Insertion end **17**, which includes rounded surface **18** is depicted in FIG. **6**. It is desirable, but not necessary, that rounded end **18** defines a uniform curvature as depicted in FIG. **6**. It is desirable to round over or streamline the end of implant body **10** to ease the insertion of the implant into a preformed cavity. Therefore, in addition to curved surface **18**, the implant also includes incline surfaces **34** and **36**. Inclined surfaces **34**, **36** and curved surfaces **18** may be provided to facilitate insertion of the implant into the preformed cavity. As explained further herein, such curved end surfaces obviate the necessity to provide a squaring off of the bottom of the channel of the preformed cavity.

It is also provided with the present invention an implant holder for releaseably securing and impacting the implant of FIGS. **1–6** into the preformed cavity. One embodiment of the implant holder is depicted in FIGS. **7–10**. Implant holder **50** includes handle **70**, gripping head **59**, first branch **52** engaged to handle **70** and second branch **54**. Second branch **54** is pivotally attached to first branch **52** with pivot pin **56**. Gripping head **59** includes a first gripping arm **60** integral to second branch **54** and a second gripping arm **62** integral to first branch **52**. Thus, in preferred embodiments gripping arm **62** remains stationary while gripping arm **60** pivots on pivot pin **56** to provide access to a recess cavity **68** formed between opposing gripping arms **60** and **62**. Gripping arms **60** and **62** include projections **64** and **66**, respectively. Projections **64** and **66** are adapted to matingly engage first indent **28** and second indent **30** on implant **10**. Furthermore, gripping head includes a surface for contacting the tool engaging end **32** of implant **10** to drive the implant into a preformed cavity. In the preferred embodiment illustrated in FIGS.**7–10**, gripping arms **60** and **62** include impacting surfaces **61** and **63**, respectively. Impacting surface **61** abuts and is substantially orthogonal to the interior side of gripping arm **60**. Impacting surface **63** is similarly disposed on gripping arm **62**.

Opposite end of gripping arms **60** and **62** are first branch **52** and a second branch **54**, respectively. First branch **52** is connected to handle **70** and remains stationary along with gripping arm **62**. However, second branch **54** on the opposite end of gripping arm **60** opens by pivoting on pivot pin **56**. Pivoting of branch **54** on pivot pin **56** causes gripping arm **60** to move away from gripping arm **62** and, thus, open the recessed cavity **68** to receive tool engaging end **32** of implant **10**. After receiving tool engaging end **32**, second branch **54** is then pivoted towards first branch **52** to close recess cavity **68** and securely engage the projection **64** and **66** into first and second attachment recesses **24** and **26** and first and second indents **28** and **30** on implant **10**.

Once branching arm **54** abuts or nearly abuts branching arm **52**, locking pin **58** engages first branch **52** and prevents pivoting of second branch **54**. Implant **10** can be released from implant holder **50** by disengaging locking pin **58** and pivotally opening second branch **54** from first branch **52**. Alternatively, other locking means such as a slidable sleeve or a collet that are adapted to encircle first and second branches and prevent opening of the gripping arms can be used with the present invention. While locking pin **58** is illustrated in FIGS. **8–10** as one embodiment of securely engaging implant **10**, it is contemplated that other locking means or mechanisms known to those skilled in the art can be used with the present invention.

Implant holder **50** engaged to implant **10** can be used to insert the implant into the intervertebral space as depicted in FIG. **11**. Insertion tube **90** is inserted into disc space **82** in a far lateral PLIF approach that can be used with a transforminal procedure. Implant **10***a* is depicted as fully seated in a first preformed cavity adjacent to vertebral body **80**. In a preferred embodiment, insertion tube **90** is first positioned adjacent the preformed cavity. Insertion tube **90** is adapted to slidably receive implant **10** and implant holder **50**. After implant **10** is securely engaged in the preformed cavity, locking pin **58** is released, thereby allowing second branch **54** to pivot away from first branch **52** and release engagement of projections **64**, **66**, and gripping arms **60** and **62** from the corresponding attachment recesses and indents on implant **10**. Insertion tube **90** may be sized to permit movement of the branches therein or may be withdrawn to allow sufficient movement for disengagement. Implant holder **50** and insertion tube **90** are then removed.

In FIG **11***a* a crescent implant and an implant holder disposed within the disc space is illustrated. A first implant **210***a* is depicted as fully seated in the disc space **82**. Insertion tube **90** provides access to the disc space **82** from the posterior side of the vertebral body **80** for insertion insertion of implant **210**. Recessed areas **219** on implants **210** and **210***a* are disposed medially.

An alternative embodiment of an implant prepared according to the present invention is depicted in FIGS. **12–16**. Implant **110** is formed in elongated J-shaped body **111** that defines a longitudinal axis **119**. One side of J-shaped body **111** includes curved section **122** that adjoins J-end **128** to form the crook of the J-shape and is bounded by straight section **120** opposite J-end **128**. In a preferred embodiment, curved section **122** includes internal concave surface **114**. Preferably, concave surface **114** is contoured based on the medullary canal of a long bone. Straight section **120** abuts tool attachment end **132**. Tool attachment end **132** includes tool engagement recess **124** for securely engaging an implant holder. Tool engagement recess **124** is adapted to secure implant **110** in the implant holder to minimize vertical movement of the implant while the implant is being inserted into preformed cavity. It is contemplated that the tool engagement end **132** can further include a variety of tool engagement structures, such as grooves, receptacles, holes, recesses, projections, pins, and detents. Upper tool recess **126** is disposed between tool engagement end **132** and flat side **116**. Flat side **116**, which is opposite straight section **120**, defines the back or laterally disposed portion of J-shaped body **111** and abuts insertion end **117** on one end and on the opposite end abuts shoulder **127**. Insertion end **117** includes curved surface **118**. While not specifically illustrated in FIGS. **12–16**, implant **11** is provided to have a length, height and width as described for implant **10**.

A plurality of ridges **112** and **113** are provided on the top surface **129** and bottom surface **130** of implant **110**. It is

more or less depicted that top surface **129** and bottom surface **130** include a series of ridges **112** and **113**. However, it is contemplated that ridges can be defined on one, two, three or four sides of implant **110**.

An alternative preferred embodiment of an implant holder is illustrated in FIGS. **17–21**. Implant holder **150** includes a shaft **151** that defines a longitudinal axis **164**. The shaft **151** includes gripping head **152** on one end and coupling point **153** on the opposite end. The shaft splits into an upper branch **154** and a lower branch **156**. The upper and lower branches are separated by channel **158**. Upper branch **154** includes upper branch extension **160**, and lower branch **156** includes lower branch extension **170**. Collectively upper branch extension and lower branch extension define the gripping head **152**.

The gripping head **152** includes at least one implant engaging structure. Preferably gripping head includes taper ends **166** and **168** that engage in corresponding recesses in the implant. The projections are provided to control lateral and vertical motion as the implant is impacted into the intervertebral space. Optimally, gripping head also includes a surface that can be used to impact or drive the implant in the preformed cavity.

In preferred embodiments, the gripping head illustrated in FIGS. **17–21** includes upper and lower branch extensions **160** and **170**, respectively. Upper branch extension **160** includes incline surface **162**, which is provided to matingly engage straight section **120** on implant **110**. Branch extension **160** includes tapered end **166** that matingly engaging tool engagement recess **124**. Lower branch extension **170** includes end **172** for engaging shoulder **127** on implant **110**. Furthermore, lower branch extension **170** includes tapered end **168**, which along with tapered end **166**, is provided for engaging tool engagement recess **124**. Tapered ends **166** and **168** engage in tool recess **124** to prevent lateral movement of the implant during impacting to force the implant into the preformed cavity.

As shown in FIG. **19**, the shaft also includes outer sleeve **184**, which is moveable along the shaft in a direction parallel to the longitudinal axis and urges the upper and lower branches together when the outer sleeve **184** is moved in the direction toward gripping head **152**. Movement of outer sleeve **184** is controlled by the threaded engagement of threaded nut **182** with external threads **157**. Outer sleeve **184** includes an internal surface (not shown) adapted to engage inclined surfaces **155** and **159** on the inner shaft to urge the branches together.

Moving outer sleeve **184** on shaft **151** toward the gripping head urges upper and lower branches **154** and **156** and upper and lower branch extensions **160** and **170** toward each other. Thus, upper and lower branches clamp and secure an implant in the gripping head.

Coupling point **153** is included on shaft **151** opposite from gripping head **152**. Coupling point **153** is used to attach a handle **180** or an impacting tool to drive an included implant in to preformed cavity.

In FIGS. **19–21**, implant **110** is depicted mounted in implant holder **150**. Upper and lower branch extensions **160** and **170** clamp implant in gripping head **152**. FIGS. **20***a* and **21** illustrate the implant engaged in an implant holder. The implant and holder are superimposed on top of an idealized outline of the superior surface of a lumbar vertebra body. The implant is positioned to lie inside the lateral edges of the vertebral body. The concave area is positioned to face medially. A second implant may be positioned on the opposite side of the vertebral body. The concave areas of the two implants would face each other to form a enclosed area to serve as a depot for osteogenic material.

Yet another embodiment of an implant according to the present invention is depicted in FIG. **22**. Implant **210** includes crescent-shaped body **211** having a convex surface **217** and an opposite concave surface **215**. Convex surface **217** is disposed between tool-engaging end **222** and opposite insertion end **216**. Implant **210** is depicted as having a series of ridges **212** projecting out of upper surface **214** and similar ridges **213** projecting from the lower surface for engaging bone surfaces. It is understood that implant **210** can be prepared having a fewer number of ridges than depicted in FIG. **22**. For example, implant **210** can include surfaces having no ridges, or ridges on one, two, three, or four or more surfaces. Implant **210** is provided with a length, height and width as is generally described for implant **10**.

Concave surface **215** adjoins abutting surface wall **226** and on opposite end adjoins taper surface **220**. While concave surface **215** gradually follows the contours of the medullary canal, it is understood that cleaning and machining the bone graft from a donor may slightly alter the medullary canal, thereby altering the configuration of concave surface **215**. Preferably, a portion of concave surface **215** is formed from a section of the medullary canal of a long bone. Concave surface **215** defines a recessed area **219** that serves as a depot for osteogenic material.

Insertion end **216** is provided to increase the ease of insertion of the implant into a preformed cavity. Thus, it is within the scope of this invention to provide insertion end **216** having a substantially streamlined shape. For example, insertion end **216** can include a bullet-shape, a curved shape, a frustoconical shape and/or a conical shape. In the preferred embodiment illustrated in FIG. **22**, insertion end **216** is bounded on three sides by tapered surfaces **218**, **220** and **221**. While not specifically illustrated in FIG. **22**, insertion end **216** also can be bounded by a fourth tapered surface opposite tapered surface **220**. Alternatively, opposite tapered surface **220**, insertion end **216** can abut convex surface **217**.

Tool engaging end **222** is opposite of insertion end **216** on crescent shaped body **211**. As with other preferred embodiments of the implants for use with the present invention, tool engaging end can include a variety of recesses, receptacles, grooves, slots, projections, and other supporting members to engage corresponding surface features on an implant holder. In the preferred embodiment illustrated in FIG. **22**, tool engaging end **222** includes central opening **224**. Central opening **224** is provided for slidably receiving a pin or a rod extension on an implant holder. Preferably central opening **224** is provided with internal threads for threadedly engaging a threaded pin or rod extension on an implant holder. Central opening **224** can extend over about 50% through body **211**, more preferably central opening extends greater than about 80% through body **211**. Most preferably, central opening **224** extends through body **211** of implant **210** so that an inserted pin or rod extension extends through or to insertion surface **216**. In preferred embodiments, central opening **224** contains a uniform cross-sectional area throughout. It is understood that central opening **224** can include segments with different diameters and/or taper from tool engaging end to insertion end **216** to receive a pin or rod extension of an implant holder that has the corresponding segment(s) or taper. (See, for example, the rod extension **246** in FIG. **32***a*). It is depicted in FIG. **22** that central opening **224** extends through the recessed area **219** defined by concave surface **215**; however, it is understood that alternative embodiments of implant **210** may provide a central opening **224** that extends through or part way through implant **210** without accessing the recessed area **219**.

Yet another embodiment of an implant holder is depicted in FIGS. **23–24**. Implant holder **240** includes extension **243**, handle **241**, shaft **242**, and gripping head **244**. Shaft **242** defines a longitudinal axis **247**. Gripping head **244** includes a first surface **250** for abutting and impacting the tool engaging end **222** to drive implant **210** into a prepared cavity. Thus, the implant holder not only releaseably secures an implant, but also provides a means for impacting the implant into a preformed cavity. Preferably, first surface **250** is roughened to better secure engaged implant **210**. Gripping head **244** also includes a holder extension **248** adjoining first surface **250** at corner **252** at an included angle **253** of about 90°, preferably orthogonal to the direction of impaction or insertion. However, in alternative embodiments, holder extension **248** can abut the first surface **250** and form an included obtuse angle **253** between the first surface and the holder extension. Alternatively, the holder extension **248** can abut the first surface **250** and form an acute included angle **253** between the first surface and the holder extension. (See, for example, similar structure inclined surface **162** in FIG. **17***a*). It is understood that the angle between the first surface and holder extension **248** can be provided to frictional secure abutting surface **226** and tool engaging end **222** on implant **210**. Thus, holder extension **248** can be adapted to inhibit lateral movement of the implant as it is impacted in the cavity.

Gripping head **244** also includes first rod extension **246**. First Rod extension **246** can include external threads for engaging internal threads in a tool receiving recess in an implant. Preferably rod extension **246** is radiopaque to provide an X-ray indicator of the location of the implant during surgery. Extension rod **246** can be fixedly mounted onto first surface **240**. Alternatively, shaft **242** disposed between gripping head **244** and handle **241** can be, but is not required to be, hollow for receiving holder extension **248**. Extension rod **246** can extend through an aperture (not shown) on surface **244** to be received within shaft **242**. In yet another alternative embodiment, first surface **250** can include a second rod extension **245**. Second Rod extension **245** is adapted to receive first extension rod **246** therein so extension rod **246** is in communication with shaft **242**.

Shaft **242** can include extension **243** for extending extension rod **246** through first surface **250**. For example, the end of extension rod received within shaft **242** can include external threads that engage internal threads of extender **243**. Twisting extender **243** caused extension rod to travel in a longitudinal direction parallel to the longitudinal axis **247** through shaft **242**.

When the implants described in this present invention are inserted into a intervertebral space, the recessed areas defined by curved surfaces on the implants and the adjoining surfaces of the adjacent vertebra form a chamber or depot for osteogenic material. (See FIG. **11**).

The recessed areas defined by curved surfaces of the implants described in the present invention can be packed with any suitable osteogenic material. The implants can be packed with osteogenic material prior to implantation or the osteogenic material may be inserted in to the chamber or depot in the intervertebral space after one or two of the implants have been inserted. In a preferred embodiment, the osteogenic composition substantially fills the recessed areas defined by the implants so that the osteogenic composition will contact the endplates of the adjacent vertebrae when the implant is implanted within the vertebrae. When "spongy" osteogenic material such as cancellous bone tissue is used, the cancellous tissue can be compressed into the recessed area or chamber to insure sufficient contact with adjacent endplates. This provides better contact of the composition with the endplates to stimulate bone ingrowth.

Any suitable osteogenic material or composition is contemplated, including autograft, allograft, xenograft, demineralized bone, and synthetic and natural bone graft substitutes, such as bioceramics and polymers, and osteoinductive factors. The terms osteogenic material or osteogenic composition used herein broadly include any material that promotes bone growth or healing including autograft, allograft, xenograft, bone graft substitutes and natural, synthetic and recombinant proteins, hormones and the like.

Autograft can be harvested from locations such as the iliac crest using drills, gouges, curettes and trephines and other tools and methods which are well known to surgeons in this field. Preferably, autograft is harvested from the iliac crest with a minimally invasive donor surgery. The osteogenic material may also include bone reamed away by the surgeon while preparing the end plates for the spacer.

Advantageously, where autograft is chosen as the osteogenic material, only a small amount of bone material is needed to pack the chamber. The autograft itself is not required to provide structural support as this is provided by the spacer. The donor surgery for such a small amount of bone is less invasive and better tolerated by the patient. There is usually little need for muscle dissection in obtaining such small amounts of bone. The present invention therefore eliminates or minimizes many of the disadvantages of employing autograft to provide structural support in the fusion procedure.

Natural and synthetic graft substitutes which replace the structure or function of bone are also contemplated for the osteogenic composition. Any such graft substitute is contemplated, including for example, demineralized bone matrix, mineral compositions and bioceramics. As is evident from a review of *An Introduction to Bioceramics,* edited by Larry L. Hench and June Wilson (World Scientific Publishing Co. Ptd. Ltd., 1993, volume 1), there is a vast array of bioceramic materials, including BIOGLASS®, hydroxyapatite, and calcium phosphate compositions known in the art which can be used to advantage for this purpose. That disclosure is herein incorporated by reference for this purpose. Preferred calcium compositions include bioactive glasses, tricalcium phosphates, and hydroxyapatites. In one embodiment, the graft substitute is a biphasic calcium phosphate ceramic including tricalcium phosphate and hydroxyapatite.

In some embodiments, the osteogenic compositions used in this invention comprise a therapeutically effective amount to stimulate or induce bone growth of a bone inductive or growth factor or protein in a pharmaceutically acceptable carrier. The preferred osteoinductive factors are the recombinant human bone morphogenetic proteins (rhBMPs) because they are readily available and do not contribute to the spread of infectious diseases. Most preferably, the bone morphogenetic protein is a rhBMP-2, rhBMP-4 or heterodimers thereof.

Recombinant BMP-2 can be used at a concentration of about 0.4 mg/ml to about 1.5 mg/ml, preferably near 1.5 mg/ml. However, any bone morphogenetic protein is contemplated including bone morphogenetic proteins designated as BMP-1 through BPM-13. BMPs are available from Genetics Institute, Inc., Cambridge, Mass., and may also be prepared by one skilled in the art as described in U.S. Pat. Nos. 5,187,076 to Wozney et al.; 5,366,875 to Wozney et al.; 4,877,864 to Wang et al.; 5,108,922 to Wang et al.; 5,116,738 to Wang et al.; 5,013,649 to Wang et al.; 5,106,748 to

Wozney et al.; and PCT Patent Nos. WO93/00432 to Wozney et al.; WO94/26893 to Celeste at al.; and WO94/26892 to Celeste et al. All osteoinductive factors are contemplated whether obtained as above or isolated from bone. Methods for isolating bone morphogenetic protein from bone are described in U.S. Pat. No. 4,294,753 to Urist and Urist et al., 81 PNAS 371, 1984.

The choice of carrier material for the osteogenic composition is based on biocompatability, biodegradability, mechanical properties and interface properties as well as the structure of the load-bearing member. The particular application of the compositions of the invention will define the appropriate formulation. Potential carriers include calcium sulphates, polyactic acids, polyanhydrides, collagen, calcium phosphates, polymeric acrylic esters and demineralized bone. The carrier may be any suitable carrier capable of delivering the proteins. Most preferably, the carrier is capable of being eventually resorbed into the body. One preferred carrier is an absorbable collagen sponge marketed by Integra LifeSciences Corporation under the trade name Helistat® Absorbable Collagen Hemostatic Agent. Another preferred carrier is a biphasic calcium phosphate ceramic. Ceramic blocks are commercially available from Sofamor Danek Group, B.P. 4-62180 Rang-du-Fliers, France and Bioland, 132 Rou d Espangne, 31100 Toulouse, France. The osteoinductive factor is introduced into the carrier in any suitable manner. For example, the carrier may be soaked in a solution containing the factor. One preferred embodiment contemplates use of OSTEOFIL® allograph paste sold by Regeneration Technologies, Inc. The allograph paste can be supplemented with a local autograft obtained from the cutting operation.

The present invention also includes instrumentation for preparing the intervertebral space between adjacent vertebrae for receiving an implant and for inserting the implant into the prepared space. Use of the implants in accordance with the present invention restores the disc height, restores segmental alignment and balance, protects nerve roots, restores weight bearing to anterior surfaces, and immobilizes the unstable degenerated intervertebral disc area. The spacers of this present invention may be conveniently implanted with known instruments and tools although improved instruments are provided that are specifically adapted for the procedure. Any instrument that will firmly hold the implant and permit the implant to be inserted is contemplated. Preferably, the instrument will be adapted to compensate for the open structure of the spacers of this invention.

It is also provided with the present invention instruments for using and inserting the implants described herein. Specific instruments include box chisels, impact or slap hammers, shavers, retractors, detractors, scrapers such as round scrapers, plain scrapers, rotatable scrapers or cutters, toothed scrapers and bone loaders. In addition, there is provided a protective sleeve illustrated in FIG. **36** for use in guided surgical procedures.

In one aspect of the invention, a novel chisel is provided. The novel chisel for preparation of the preformed cavity in the intervertebral disc space is depicted in FIGS. **25** through **25***d.* Box chisel **260** includes a handle **262**, having an engagement hole **263** adapted for attachment of an impacting tool such as a slap hammer shown in FIG. **27**. In addition, box chisel **260** includes shaft **264** extending from handle **262** and connecting with cutting head **266**. Shaft **264** defines a longitudinal axis **261**. Cutting head **266** includes first arm **267** and opposing second arm **269** extending from shaft **264** substantially parallel to longitudinal axis **261**. Upper cutting blade **268** and opposing lower cutting blade **270** are disposed between first and second arms **267** and **269**. First arm **267** and second arm **269** define internal cavity **276** for receipt of bone chips and cutting debris. One or both of first arm **267** and second arm **269** include index markings **274**, which indicate the depth of cut for the box chisel, thus allowing the surgeon to determine how deeply he/she has cut into the intervertebral space.

Non-cutting edge **273** is attached to first arm **267**. Similarly, non-cutting edge **272** is attached to first arm **269**. Non-cutting edges **273** and **272** are positioned to extend distally beyond cutting blades **268** and **270** in a direction parallel to the longitudinal axis. Referring to FIGS. **25***b–c,* non-cutting edge **273** includes an upper guide portion **296** and a lower guide portion **298** extending at least partially beyond the cutting edges. Similarly, non-cutting edge **272** includes identical upper and lower guiding portions. The guiding portions contact the surface prior to the cutting edges **268** and **269**. Preferably the non-cutting edges **273** and **272** of the adjacent vertebrae are rounded to follow the interior surfaces of the opposing end plates of adjacent vertebrae. Thus, the rounded non-cutting edges follow along the surfaces of end plates and center the box cutter within the disc space and the included upper and lower cutting blades **268** and **270** between the two end plates. When the two cutting blades are centered between the opposing endplates, the blades cut equal amounts of bone from each end plate and are prevented from creating a potential offset opening between the endplates, resulting in improper implant placement and excess bone removal, which could increase the risk of implant interface subsidence.

Attachment hole **263** in handle **262** of box chisel **260** is provided for attachment of an impact or slap hammer as depicted in FIG. **27**. Impact hammers are well known in the art and attachment hole **263** can be provided for attachment to any of the known impact hammers for use with the present invention. In preferred embodiments, slap hammer **310** includes threaded end **320**. Threaded end **320** is threadedly engaged in internal threads in **263**. Slap hammer **310** includes weight **316** that slides on shaft **314**. Use of a slap hammer in accordance with this invention allows for controlled force impacting cutting tool and implants. The slap hammer also provides a means for removal of impacted surgical tools such as the chisel after cutting.

Referring now to FIGS. **25***b–d,* in use box chisel cutting head **266** is positioned in substantial alignment with a space **279** between adjacent vertebrae endplates **277** and **278**. Non-cutting edges are inserted into space **279** with guiding portions **296** and **298** engaging endplates **277** and **278**. Cutting head **266** is then advanced, by use of a slap hammer if necessary, with blades **268** and **270** removing the tissue of endplates **277** and **278**, respectively, disposed between the guide portions and the blades.

There is also provided in the present invention a novel retractor assembly as depicted in FIGS. **28–30**. Nerve retractor assembly **330** includes retractor handle **346**, retractor **340**, and channel **352** for receiving retractor blade **342**. Channel **352** of retractor **340** is provided in a shape to minimize the amount of retraction of the neural structure necessary to perform the procedures yet provide the surgeon with an unobstructed view of the intervertebral space. Channel **352** and retractor blade **342** are illustrated in FIGS. **28** and **30** as having a generally concave shape. It is also considered within the scope of the present invention to provide channel **352** and retractor blade **342** in alternative shapes to meet specific needs to gain access to a surgical site.

Nerve retractor assemble **340** also includes at least one, preferably two, supporting members positioned on opposing

sides of channel **352**. Preferably channel **352** includes at least one, preferably two, enlarged edges **347** and **349**. Enlarged edges **347** and **349** can be adapted for receiving pin drive shaft **334**. In addition, enlarges edges **347** are adapted to receive and hold retractor blade **342**. Retractor blade **342** may be inserted from the top portion of channel **352** adjacent shoulder **354** and slidably advanced toward distal end **351**. Blade **342** is retained in place by enlarged edges **347** and **349**, as well as surface **358**. Retainer blade **342** further includes a distractor tip **344** sized to be inserted into a disc space to achieve or maintain distraction. It will be understood that the width of tip **344** may be varied depending on the amount of distraction desired. Moreover, while pins **336** and **338** are disclosed for maintaining the position of the retraction assembly, it is contemplated that the engagement of retractor blade **342** in the disc space may be sufficient to hold the retraction assembly without the use of pins **337** and **338**.

In alternative embodiments, pin **336** includes threads for threading engagement in internal threads (not shown) of supporting member **349**. Thus, pin **336** can be anchored to the channel of retractor **340**. Pin **336** includes pin driver handle **332**, pin driver shaft **334**, which can include a lower portion which is slidedly engaged in support member **350**. Pin **336** includes at its distal end a tissue engagement end **337**. A second pin **338** can be mounted on a second supporting member **350**. After manipulation of the spinal structures using retractor blade **342** and retractor **340** to provide sufficient room to proceed with the PLIF operation, tissue engaging end **337** of pin **336** is forcibly inserted into tissue such as bone to secure the retractor blade and the retracted neural structures. Alternatively, the second pin **338** can be used to initially position and secure one side of nerve retractor assembly **330** relative to the nerve structure. After the pin has been used to secure one side of the retractor, the retractor can be used to engage and manipulate the selected nerve structure. After the nerve structure has be sufficiently retracted a second pin is forcibly inserted into tissue.

Retractor blade **342** is provided in a shape the can be nested in channel **352** to ensure that the surgeon has an unobstructed view of the surgical site. Retractor blade **344** includes lead ends of retractor **344** opposite stop **343**. Stop **343** is inserted into opening **341** on retractor **340**. Preferably stop **343** extends through opening **341** and engages shoulder **354** to secure retractor blade to retractor **340**.

There is also provided in the present invention a distractor as depicted in FIGS. **31** and **31***a*. Distractor **370** includes coupling **372** attached to one end of shaft **374** and a distractor head **376** disposed opposite coupling **372** on shaft **374**. Distractor head **376** is substantially in the form of a wedge shape, wherein distractor tip **379** forms the apex of the wedge. Preferably, distractor tip **379** contains a blunt edge. Distractor head **376** includes large side **380** and a corresponding large side opposite **380** to form the large side of a wedge. The large side of distractor head **376** is defined as having a length illustrated by reference line **384**. Similarly, small side **382** and corresponding side opposite **382** form the short or small side of the wedge having a width illustrated by reference line **386**. Furthermore, the detractor head includes a series of index markings **378** which index the depth the retractor is inserted into tissue.

Additional cutting instruments are provided for use with the present invention. For example, shaver **280** illustrated in FIGS. **26** and **26***a* is provided with a cutting head **286**, shaft **284**, and handle **282**. Handle **282** includes a receptacle **283** or attachment of a slap hammer. Cutting head **286** includes upper shaving blade **288** and lower shaving blade **290** provided between first arm **287** and second arm **289**. Upper and lower shaving blade **288** and **290** are orthogonal to first and second arms **287** and **289** such that when the upper or lower shaving blade **288** or **290** or both are raked across tissue surfaces, the blades cut or scrape away a portion of tissue surface. Cutting head **286** also includes a series of index markings **294** to determine the depth of the scraper head in tissue.

Round scraper illustrated in FIGS. **32–32***f* is provided for use with the present invention. Round scraper **390** includes shaft **402** and scraper head **392**. Shaft **402** defines a longitudinal axis **391**. Scraper head **392** includes a first arm **393** and a second arm **395**. Shaft **402** includes a tapered neck **403**. First arm **393** and second arm **395** define a cavity **398** for receipt of cutting debris. Attached to first and second arm **393** and **395** are rounded scraper edges **394** and **396**. First arm **393** and second armm **395** are attached to curved tip **404**. Rounded scraper edges **394** and **396** are backward-facing cutting edges, which can cut bone or other tissue as the round scraper **390** is withdrawn from the disc space. Round scraper edges **394** and **396** are provided to allow simultaneous cutting on opposing surfaces of adjacent vertebral bodies. First arm **393** includes an upper surface **397** and a lower surface **400**. Upper surface **397** and lower surface **400** are substantially flat. Second arm **395** includes similar structures. Upper surface **397** and/or lower surface **400** allow for controlled scaping of the disc space by contacting either the upper or lower vertebral body. Furthermore, the flat upper and lower surfaces **397** and **400** and tapered neck **403** are adapted to provide enhanced viewing of the disc space. It is important to be able to view the disc space while positioning the round scraper **390** in the disc space to remove bony tissue. Round scraper **390** is provided for preparing a bottom of the preformed cavity for proper seating of implants as depicted in the present invention.

There is also provided in accordance with the present invention a plane scraper **410** illustrated in FIGS. **33** through **33***c*. Plane scraper **410** includes scraper head **412**. Scraper head **412** is adapted to provide a plurality of plane scraper blades **414** and **416**. Plane scraper blades **414** and **416** are integrally attached to first arm **415** and second arm **417**. One or both of first arm **415** and/or **417** include index markings **418** to indicate the depth the plane scraper is inserted into the cavity. First and second arm **415** and **417** define a cavity **420** for receipt of bone cuttings and debris.

As shown in FIG. **34**, there is also provided in accordance with the present invention rotatable cutter **430**. Cutter **430** includes handle **432**, shaft **434**, and cutter head **436**. Cutter head **436** includes first cutting arm **437** and second arm **439**. First cutting arm **437** and second cutting arm **439** are spaced apart and define a cavity **448**therebetween for receipt of cutting debris. First cutting arm **437** includes at least two cutting blades. For example, FIG. **34***a* depicts cutting arm **437** having a first cutting blade **438** and opposite second cutting blade **440**. First and second cutting blades extend longitudinally and are positioned to lie parallel to the longitudinal axis of rotatable cutter **430**. Similarly, second cutting arm **439** is provided with a first cutting blade **442** and a second cutting blade **443**. Rotatable cutter **430** is provided for use in a disc space to cut adjacent endplates of adjacent vertebrae by a twisting the cutter. As with other instruments, the cutting head includes index marks **441** to indicate the depth the rotatable cutter is inserted into tissue.

Referring to FIG. **35**, also toothed scraper **460** is provided in accordance with the present invention. Toothed scraper **460** includes handle **462**, shaft **464**, shaped flat distal end

466, and cutting head 468. Cutting head 468 includes a plurality of scraper edges, each scraper edge having a series of teeth 471. In preferred embodiments, scraper head 468 includes first scraper edge 470 and second scraper edge 472. Scraper head 468 culminates in a curved distal end 474. As with other instruments provided in accordance with the present invention, cutting head 468 includes index markings 476 to indicate the depth the cutter is inserted into tissues.

A preferred embodiment of protective guide sleeve 510 is illustrated in FIG. 36. Protective sleeve 510 includes hollow body 512. In preferred embodiments, hollow body 512 is provided in the form of a hollow rectangular tube. Hollow body 512 includes a seating end 516, which is open and provides access to the interior of hollow body 512. Hollow body 512 also includes an opposite end that branches into a first distractor fin 518 and second distractor fin 520 extending from end 517. First distractor fin 518 is provided with inclined surface 526, which tapers to reduce the width of distractor fin 518. Distractor fin 518 furthermore culminates in a first curve tip 522. Second distractor fin 520 also includes an inclined surface 528 and culminates in curve tip 524. Positioned between the seating end 516 and first and second distractor fins 518 and 520 is viewing aperture 514. Viewing aperture 514 is provided for visualization of the interdisc space and viewing the index marks on the instruments that are inserted through the interior core of hollow body 512. Use of protective sleeve 510 allows a surgeon to minimize incised area and exposure of internal tissue during posterior lumbar interbody fusion surgical procedures. The protective sleeve 510 provides protection for neural structures. Furthermore, seating end 516 of protective sleeve 510 provides a surface for engaging depth stops on surgical instruments to control cutting bony surfaces and countersinking implants.

A number of surgical instruments are illustrated in FIGS. 37–40*c* that can be used in conjunction with guide sleeve 512. These instruments include many of the same features, benefits and aspects as have already been disclosed in the above description. In addition, these instruments include additional features and objects. These instruments are adapted to be received within the interior region of guide sleeve 512. In general, these surgical instruments include a shaft attached to a surgical head adapted to be received within the interior region of a guide sleeve.

Yet another embodiment of a box chisel is illustrated in FIGS. 37*a*–38. Similar to the embodiment depicted in FIG. 25, Chisel 550 comprises a cutting head 551 that includes first non-cutting edge 554, second non-cutting edge 556 an upper cutting blade 558 and a lower cutting blade 560. Cutting head 551 includes internal cavity 557. Chisel 550 further includes a shaft 552 that is adapted to be received within the interior region 513 of protective guide sleeve 510 as illustrated in FIG. 38. Depth stop 562 is mounted on shaft 552 to prevent the chisel from cutting deeper than a predetermined depth by contacting seating end 516 on protective sleeve 510. In a preferred embodiment illustrated in FIG. 38, depth stop is threadedly mounted on shaft extension 564 so that rotation of depth stop 562 about the shaft adjusted the depth of cut. Depth indicator marks 566 on shaft extension 564 indicate the depth the chisel will cut when the depth stop 562 has contacted seating end 516.

Referring now to FIGS. 39*a*–39*f*, another embodiment of an implant holder is illustrated. The implant holder 570 includes a gripping head 572 shaft 574 and handle 576. As with other embodiments of the implant hold described for use with the present invention, implant holder 570 releaseably secures and impacts an implant into a preformed cavity. Gripping head 572 includes structural features for both securely gripping the implant and for driving the implant. For example, in the preferred embodiment illustrated in FIGS. 39*e* and 39*f*, gripping head includes a roughened impacting surface 576. Roughened impacting surface 576 is provided substantially orthogonal to the direction the implant is impacted into the vertebral body. The roughened surface provides frictional engagement with the tool engaging end of the implant and in combination with a second structure such as a second surface 578, inclined surface 579 or a shaft extension 580 secure the implant to the gripping head during the PLIF operation. Once the implant has been driven into the vertebra body, the implant is released from the gripping head.

Yet another embodiment of the implant holder is illustrated in FIGS. 40*a*–40*c* Implant holder 590 includes griping head 591, shaft 592, depth stop 593, and handle 594. Gripping head 591 includes an impacting surface 595. Preferably impacting surface 595 is roughened or knurled. Gripping head 591 also includes a second surface 597, which is substantially orthogonal to impacting surface 595. A third inclined surface 598 abuts opposite end of impacting surface 595 from second surface 597. Shaft extension 599 protrudes through impacting surface 595 to be received within shaft 592. Handle 594 includes shaft extender 600, which is rotatably mounted on handle 594. In preferred embodiments, shaft extender 599 extends through shaft 592 and handle 594 and includes external threads that are matingly received in internal threads on shaft extender 600. Gripping head 591 includes structural features for both securely gripping the implant and for driving the implant into intervertebral space. For example, impacting surface 595 in combination with a second surface 597 and/or incline surface 598 secure the implant to the gripping head. Preferably, shaft extension 599 matingly engages in a tool-engagement recess on an implant. In preferred embodiments, shaft extension 599 is radiopaque and extends through implant body to or through the insertion end. Radiopaque shaft extension 599 provides a means for viewing the seating of an implant during surgery via radiography.

Implant holder 590 can be used with protective guide sleeve 510. Gripping head 591 and shaft 592 can be adapted to be slidably received within the interior region 513 of guide sleeve 510. Depth stop 593 on implant holder 590 is adapted to engage or contact the seating end 516 on guide sleeve 510.

In one preferred embodiment, implant holder 590 includes shaft 592, which is provided with a square or rectangular cross-section and adapted to be matingly received with a square or rectangular protective guide sleeve. Mating engagement of implant holder 590 within protective sleeve 510 correctly centers implant holder 590 and a secured implant in the prepared vertebral space.

Depth stop 593 can be provided on shaft 592 in a fixed position or a variable position. Varying the position of depth stop 593 on shaft 593 allows for depth control during impaction of implant into the prepared vertebral space.

There is also provided in accordance with the present invention a bone graft loader 670 illustrated in FIGS. 41 and 42. Bone graft loader 670 includes plunger 672, depth stop 674, pivot plate 678 pivotally mounted with pivot pin 676 to loader shaft 680. Loader shaft 680 includes a first surface 688, a second bottom surface 689, an insertion end 686 and a second end 687. In preferred embodiments, loader shaft 680 also includes third wall 691, and fourth wall 692. Fourth wall 692 opposite first wall 688 includes opening 682

proximal to mounting surface **690** on pivot plate **678**. Plunger **672** includes a first end **693** that is positioned within loader shaft **680**. Furthermore, plunger **672** is adapted to be slidably received within loader shaft **680** such that plunger **672** is disposed between pivot pin **676** and first surface **688**. In a first position first end **693** of plunger **972** is proximal to depth stop **674** and disposed within loader shaft **680** between to pivot pin **676** and first wall **688**. In a second position plunger **672** is proximal to insertion end **686** and within loader shaft **680** and disposed between pivot plate **678** and first wall **688**. Pivot plate **678** is pivotally mounted to loader shaft **680** with pivot pin **676** and disposed within loader shaft **680** in a first position in a substantially a diagonal direction from pivot pin **676** to insertion end **686**. In a second position pivot plate is disposed within loader shaft **680** to lie substantially parallel to fourth wall **692**. Pivot plate **678** includes a mounting surface **690** for receiving osteogenic material **684**. Opening **682** provides access to the interior of loader shaft **680** for receipt of osteogenic material, which can be deposited on mounting surface **690**.

Referring to FIGS. **43***a* and **43***b*. Bone loader **670** can be adapted to be slidably received within protective guide sleeve **510**. Loader shaft **670** can be used to pack osteogenic material, such as morselized bone graft, into the intervertebral space. The morselized bone graft can be packed either prior to insertion of an implant or subsequent to insertion of an implant. Osteogenic material **684** is packed onto mounting surface **690** through opening **682** while plunger **672** is in a first position distal from insertion end **686** of shaft **680**. Bone graft loader **670** is then inserted into guide tube **510** position insertion end **686** within the intervertebral space such that opening **682** opens either laterally or medially within the intervertebral space. Plunger **672** is pushed into loader shaft **680** in a direction toward insertion end **686**. When plunger **672** is thus disposed within loader shaft **680**, pivot plate **678** is disposed against fourth wall **692** and the osteogenic material **684** is forced through opening **682** and into the intervertebral space.

Bone graft loader **670** can also be used to anteriorly position osteogenic material in the intervertebral space. Plunger **672** is pushed part way into loader shaft **600** to dispose pivot plate **678** against fourth wall **692**. Osteogenic material can be inserted into loader shaft **680** through opening **685** in insertion end **686**. Insertion end **686** can be inserted into the disc space preferably through protective guide sleeve **510**. Forcing plunger **672** fully into loader shaft **680** forces the osteogenic material into the disc space.

Reference to donor bone is understood, for the purposes of the present invention, to include cortical bone, cancellous bone, and any combination thereof, it being understood that cortical bone typically demonstrates greater structural integrity and is therefore a preferred material for fashioning load-bearing implants.

Implants prepared according to the present invention can include a portion of the exterior wall of a bone slice. In the J-shaped space superimposed on the bone slice **640**, flat side **16** can include convex surfaces where flat side **16** abuts insertion end **17** and tool engagement end **32**. The curvature results from providing bone implants for the present invention through a more efficient use and conservation of donor bone. Bone implants such as dowels are formed from cross-sectional slices of long bones such as the femur, tibia and fibula. The remnants from this process include a curved surface formed from the outer walls of the bone slice. The most efficient use of these remnants may require that flat side **16** be machined to include at least a portion of the curved surface.

There also is provided a method of providing implants by a more efficient use of donor bone. Current methodologies for providing cortical bone infusion implant spacers typically require cutting the spacer, usually in the form of a dowel, from the diaphysis of a long bone. Only a certain portion of the diaphysis bone wall is sufficiently thick to provide dowels with requisite strength to maintain the intervertebral space. For example, in a human femur only about the middle third of the diaphysis, where the shaft is narrowest and the medullary canal is well formed, has sufficient thickness and density to be used to prepare cylindrical cortical dowels. The suitable portions of the diaphysis are sliced and then a cylindrical plug is cut from each slice.

FIG. **44***a* illustrates bone slice **610** viewed from above, which was cut from the diaphysis of a long bone. The medullary canal **612** lies substantially in the center of the bone slice. Reference lines **616** and **617**, which outline a pattern for cylindrical dowel, are superimposed on bone slice **610**. In FIG. **44***b* the bone slice **610** is viewed from the side, and pattern of the cylindrical bone dowel is defined by reference lines **616** and **617**. The cylindrical bone dowels are cut from the bone slice then machined to form a cylindrical dowel having the desired shape and surface features. Most often the cylindrical dowels include the medullary canal to provide a depot for osteogenic material and promote fusion of the adjacent vertebrae. Much of the donor bone is wasted as is illustrated in FIGS. **45**, **46** and **46***a*. Remnant **620**, which includes a portion of the medullary canal **620** is often discarded. The present invention uses scraps such as remnant **620** to prepare implants. For example, remnant **620** may be used as a starting point to prepare a crescent shaped implant according to the present invention. In FIG. **46***a* a cortical bone dowel is illustrated. Cortical bone dowel **622** is formed from bone slice **610**.

Referring now to FIGS. **47** and **48**, portions of long bones segments from the upper or lower third of the diaphysis of long bones are illustrated. Nearer to the end of the bone the slices are taken, the more irregular shaped the slices become. Cortical bone walls become much thinner or the medullary canal in these portions of the bone is not sufficient circular to be used to manufacture cylindrical dowels. The above-described bone segments are not suitable for the formation of cylindrical dowels. However, these segments of the long bones can be used to form the implants shaped according to the present invention. Moreover, utilization of the teaching of the present invention may yield a greater volume of implants from the same amount of donor bone. While it is within the scope of this invention to use any suitable long bone, FIGS. **47** and **48** illustrate sections of humeral and tibial shafts. In FIG. **47** bone slice **640** is illustrated. A J-shaped implant **110** and two implants **10** having flat sides are superimposed in bone slice **640**. In a preferred embodiment, three J-shaped implants can be prepared from a single bone slice. Similarly, the bone segment of FIG. **48** may be divided into three crescent shaped implants. Crescent shaped implants **642**, **644** and **646** are superimposed on blone slice

Use of these previously undesirable donor portions in accordance with the present invention provides a more efficient use and conservation of a limited and very valuable resource of cortical donor bone.

The present invention also includes a method for fusing adjacent vertebrae. The patient is placed on the operating table in the prone position with lateral C-arm fluoroscopy. A midline incision provides the approach and exposure of the interlaminar space and facet joints at the affected level, which for this example is L4–5. The soft tissue exposure

should also include the pedicle entry zone at L4 with care taken to not disrupt the facet caps or ligaments at L3–4. Exposure of the dura is accomplished in a routine fashion with bilateral hemi laminectomy and medial facetectomy with care to save the morselized bone ships removed during this decompression. After the lateral dura and nerve root traversing the L4–5 level has been exposed on both sides, the facet should be removed laterally so that there is an adequate exposure to the disc lateral to the L5 root bilaterally. An attempt to preserve some component of the L4–5 facet complex should be made if possible. The epidural veins are coagulated over the annulus or herniated disc and any tethering of the L5 root is dissected to allow for sufficient medial retraction of the dura and L5 root.

A conventional discectomy is performed by incising the annulus with preferably a 15 scalpel blade and removing this annulus with a discectomy rongeur. This is done bilaterally, and then soft fragments from the intradiscal space or extruded fragments are removed with the discectomy rongeur in a conventional fashion. Loose intradiscal fragments are removed both medially and laterally into a depth of about 30 mm.

The remaining soft tissue or cartilaginous endplate coverings are scraped away from the endplate using the round scraper **390**. This vigorous scraping or curettage of the soft tissue endplate material is done starting medially under the midline and gradually working laterally in a sweeping motion until the upper and lower cartilaginous endplates have been cleared of the soft tissue. This is also performed bilaterally with the intent to create satisfactory endplate surface to promote fusion of the endplate and morselized graft to be inserted in the disc space later in the procedure.

The disc space is then sequentially distracted until the original disc space height is obtained and the normal foraminal opening accomplished. This is done by inserting a 9 or 10 mm distractor **370** on one side, rotating it, and then taking a distractor **370** 1 mm larger and inserting it in the opposite side, rotating it, and then alternating sides until the desired height is obtained. The largest distractors are left in the disc space in the distracted position while continued disc space preparation is performed on the opposite side.

Rotating cutter **430** is inserted into the non-distracted side and rotated to remove residual intradiscal material and create a channel in the dorsal-most endplate, removing osteophytes and facilitating placement of the guide tube anchoring fins. The rotating cutter **430** is inserted into a depth of about 30 mm, rotated and carefully lifted out, removing the soft tissue from the disc space. After using this on the left side, the distractor **370** is removed from the right, inserted on the left, distracted, and then the rotating cutter **430** is used on the right side in the same fashion. This is inserted and rotated until there is no further soft tissue removed from the disc space. After removing the rotating cutter, the discectomy ronguers may also be re-inserted to remove residual soft tissue. At this point, the disc space and opening is ready to accept protective sleeve **510**.

Using fluoroscopic guidance, appropriate size guide sleeve **510** is selected, and with the dura retracted using flat, bayoneted, dura and nerve root retractor, protective sleeve **510** is seated down into the laminectomy defect and first distractor fin **518** and second distractor fin **520** are anchored into the disc space. Using the mallet, the guide sleeve is then impacted securely into the laminectomy opening with caution not to trap dura or the upper traversing root under the protective sleeve end **517**. Once this has been seated on the disc space and the seating confirmed using fluoroscopic guidance, distractor **370** is removed from the opposite side, and the nerve root retractor is lifted out as well.

The appropriate box chisel **550** is then inserted into the guide tube and with the slap hammer or the mallet is impacted down into the disc space, cutting the tract in the endplate to accept the bone graft. This is done using fluoroscopic guidance to ensure that the upper cutting blades **558** and lower cutting blades **560** enter the disc space and traverse in a parallel fashion to the endplates. The depth of the chisel may be adjusted by rotating depth **562** stop at the top of chisel **550**. Once the chisel has been impacted to the desired depth, preferably about 23–28 mm, it is then removed using the slap hammer technique, carefully removing it from the disc space. After removal of the chisel, whose internal cavity **557** may also include disc and endplate material, the discectomy rongeur is inserted down the guide tube to remove any further residual soft tissue.

The side-loading morselized bone graft loader **670** is then loaded with an alloquat of morselized autologous or autograft bone and then inserted into the guide sleeve **510** with the side opening **682** aimed laterally. Once the bone graft loader **670** is fully inserted in the guide sleeve **510**, the piston **672** is impacted down the loader shaft **680** delivering the morselized bone laterally. The bone graft loader **670** is then removed in this "delivered position," the piston removed from the loader shaft **680**, and the second alloquat of bone inserted in the bone graft loader. The bone graft loader **682** is then again inserted and aimed with the opening **602** aimed medially. When fully inserted, an alloquat of morselized bone is then delivered medially under the midline. The bone graft loader is once again removed, and the disc space is ready to accept the structural allograft.

The appropriate-sized implant **210** is then attached to implant holder **570** and the shaft extension **580** is fully extended by turning extension knob **582**, seating the graft on the loader firmly. It is then placed in the guide sleeve **510** and impacted into the disc space to the desired depth. The shaft extension **580** is then unscrewed from the graft and then implant holder **570**. The guide sleeve **510** is also then removed from disc space and the discectomy and graft site inspected. The epidural space is then temporarily packed with gel foam for hemastasis, and the entire procedure is again repeated on the opposite side.

After the interbody grafts have been securely placed and their location confirmed using fluoroscopy, the large rongeur is used to remove the dorsal aspect of the L5 facet joint at the transverse process on the left side exposing the opening to the L5 pedicle. Using a pedicle probe and with fluoroscopic guidance, the trajectory or path of the pedicle is identified, the pedicle probe is removed, and the appropriate-sized tap inserted down the pedicle, followed by the DYNA-LOK® pedicle screw. This same procedure is repeated at L4 with care taken not to disrupt the facet joint or ligament at L3–4. The lateral aspect of the facet and transverse process at the junction are removed with the rongeur followed by the probe, tap, and then pedicle screw. This is again repeated on the opposite side. When all four screws have been placed, the titanium plate is seated down over the pedicle screws. The residual morselized bone from the laminectomy and facet is packed laterally over the residual facet joint and medical transverse processes and then the locking screws are seated down onto the plate, and pedicle screws tightened to secure the plates to the pedicle screws. If necessary, a compressor is used to place compression forces on the pedicle screws as the nuts are being tightened down. After the nuts have been tightened, the epidural space is once again inspected for appropriate decompression of the L4 and

L5 nerve roots, hemastatis is obtained using the gel foam sponge, and then the wound is closed in layers after irrigating with vast tracent solution. Care is taken to close the fascia securely and attach it to the residual spinous process and interspinous ligament if possible.

It is understood to those skilled in the art that the above procedure can be directed to a transforminal procedure using a far lateral PLIF approach through the facet joint. Typically the facet joint is removed to provide an approach to the disc space in an oblique orientation relative to the posterior vertebral body. This provides access to the disc space with minimal retraction of the dural structure and nerve roots.

While the invention has been illustrated and described in detail in the drawings and the foregoing description, the same is considered to be illustrative and not restrictive in character. It is understood that only the preferred embodiments have been shown and described and that all changes and modifications that come within the spirit of the invention are desired to be protected.

We claim:

1. An implant holder for releasable securing a spinal fusion implant, the holder comprising:

a shaft defining a proximal end and an opposite distal end with a longitudinal axis extending between said proximal and distal ends, said shaft including an upper branch, a lower branch and a channel therebetween; and

a gripping head attached to said distal end, said gripping head including an upper branch extension attached to the upper branch, a lower branch extension attached to the lower branch, wherein the lower branch extension includes an impacting first surface and a second surface abutting the first surface and positioned to lie substantially parallel to the longitudinal axis and wherein the upper branch extension defines a distal portion having a first width and a proximal portion having a second width, said first width greater than said second width, and wherein said upper branch extension further includes an impacting third surface abutting said proximal portion and a fourth surface extending from the distal portion to the proximal portion and positioned to lie at an oblique angle relative to the longitudinal axis and adapted to matingly engage one side of a secured implant; and

a closure device movably mounted on said shaft, said closure device movable between a holding position urging said upper and lower branches together and a released position allowing movement of said upper and lower branches.

2. The implant holder of claim **1** wherein the impacting first surface and impacting third surface includes an implant engaging projection.

3. The implant holder of claim **1** wherein the second surface is adapted to matingly engage a tool engaging recess in an implant.

4. The implant holder of claim **3** wherein the shaft further includes a coupling point for attaching a handle or an impacting tool.

5. An implant holder for releaseably securing a spinal fusion implant having an end wall and a side wall, the holder comprising:

a shaft defining a longitudinal axis and having a proximal end and an opposite distal end;

a gripping head attached to the distal end of the shaft, the gripping head provided with an impacting first surface positioned to lie substantially perpendicular to the longitudinal direction and a second surface abutting the first surface and substantially perpendicular to the first surface, said first surface configured to engage the implant end wall, the second surface adapted to engage the implant side wall for controlling lateral motion of a secured implant; and

a pin extending from the first surface substantially parallel to the longitudinal axis.

6. The implant holder of claim **5** wherein a portion of the pin is radiopaque.

7. The implant holder of claim **5** wherein the shaft is hollow and the gripping head further includes a passageway through the first surface and into the shaft for receiving said pin therein.

8. The implant holder of claim **7** wherein the shaft includes means for extending said pin.

9. The implant holder of claim **7** wherein the second surface abuts the first impacting surface and defines an included obtuse angle with the first impacting surface.

10. The implant holder of claim **5** wherein the second surface abuts the first impacting surface and defines an included acute angle with the first impacting surface.

11. The implant holder of claim **5** wherein the gripping head further includes a third surface abutting the first surface and positioned to lie substantially parallel to the longitudinal axis.

12. The implant holder of claim **7** wherein the impacting first surface is roughened.

13. The implant holder of claim **1** wherein the upper branch extension has a width that smoothly tapers from the distal portion to the proximal portion.

14. An implant holder for releaseably securing a spinal fusion implant, the holder comprising:

a shaft defining an upper branch and including a proximal end having a handle, an opposite distal end with a longitudinal axis extending between said proximal and distal ends, said upper branch including an impacting first surface and a substantially elongate second surface abutting the first surface, said substantially elongate second surface extending in a direction distally beyond the first surface and substantially parallel to the longitudinal axis;

a lower branch pivotally joined to said shaft and including an impacting third surface and a fourth surface adapted to matingly engage one side of a secured implant; and

a locking mechanism on said shaft preventing pivotal movement of said lower branch with respect to said shaft.

15. The implant holder of claim **14** wherein the impacting first surface and impacting third surface includes an implant engaging projection.

16. The implant holder of claim **14** wherein the second surface is adapted to matingly engage a tool engaging recess in an implant.

* * * * *