US007233790B2

(12) **United States Patent**
Kjellberg et al.

(10) **Patent No.: US 7,233,790 B2**
(45) **Date of Patent: Jun. 19, 2007**

(54) **DEVICE CAPABILITY BASED DISCOVERY, PACKAGING AND PROVISIONING OF CONTENT FOR WIRELESS MOBILE DEVICES**

(75) Inventors: **Rikard M. Kjellberg**, Santa Cruz, CA (US); **Sheng Liang**, Cupertino, CA (US); **Tomas G. Lund**, Menlo Park, CA (US); **William Chan**, San Mateo, CA (US); **Ramakrishna Chinta**, Sunnyvale, CA (US); **Xinbi Chen**, Palo Alto, CA (US)

(73) Assignee: **Openwave Systems, Inc.**, Redwood City, CA (US)

(*) Notice: Subject to any disclaimer, the term of this patent is extended or adjusted under 35 U.S.C. 154(b) by 753 days.

(21) Appl. No.: **10/600,746**

(22) Filed: **Jun. 19, 2003**

(65) **Prior Publication Data**

US 2004/0054786 A1 Mar. 18, 2004

Related U.S. Application Data

(60) Provisional application No. 60/393,024, filed on Jun. 28, 2002, provisional application No. 60/392,383, filed on Jun. 28, 2002, provisional application No. 60/393,041, filed on Jun. 28, 2002, provisional application No. 60/392,999, filed on Jun. 28, 2002.

(51) **Int. Cl.**
H04M 3/00 (2006.01)

(52) **U.S. Cl.** **455/419**; 455/418; 455/414.1

(58) **Field of Classification Search** 455/419, 455/418, 414.1

See application file for complete search history.

(56) **References Cited**

U.S. PATENT DOCUMENTS

5,835,724 A 11/1998 Smith

(Continued)

FOREIGN PATENT DOCUMENTS

EP 0 992 922 A2 4/2000

(Continued)

OTHER PUBLICATIONS

Austaller, Gerhard, et al.: "Gulliver Beans: Generating Device Optimized and Individualized Content for WAP Applications", Proc. Workshop Information Design for Mobile Web Services, [Online] May 15, 2000, pp. 1-7, XP-002266242.

(Continued)

Primary Examiner—Creighton Smith
(74) *Attorney, Agent, or Firm*—Blakely Sokoloff Taylor & Zafman LLP

(57) **ABSTRACT**

A network server system includes a download manager that manages the publication, purchase and delivery of digital products from multiple suppliers to wireless services subscribers in multiple domains. Product suppliers can publish and manage their products on the server system via a computer network and make their products available to the subscribers for purchase or licensing. The subscribers in each domain can access the server remotely to purchase rights to download and use the products on associated wireless communication devices. Multiple different implementations of any product can be maintained, where each implementation corresponds to a different set of device capabilities. Each product can also be associated with multiple different provisioning models, each corresponding to a different set of device capabilities.

14 Claims, 14 Drawing Sheets

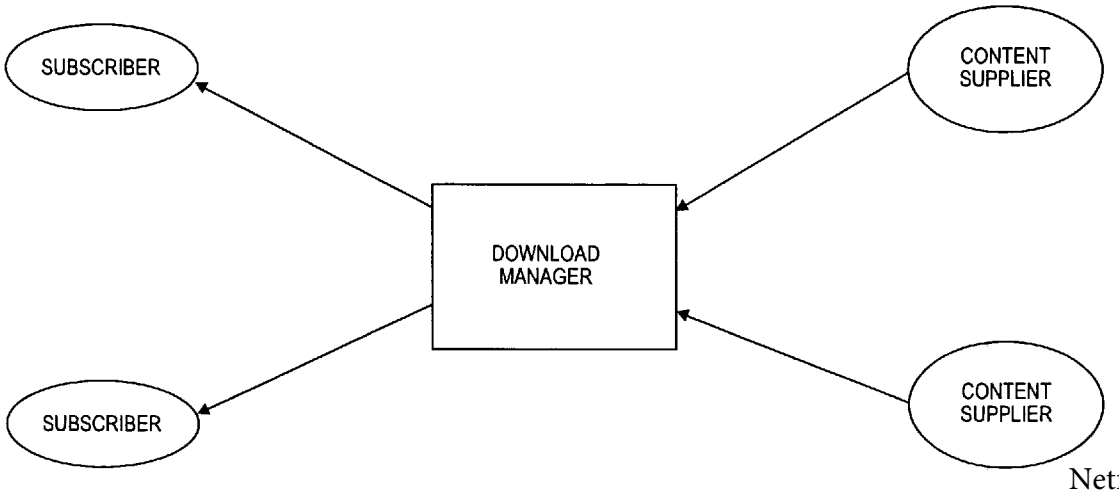

Netflix v. VideoLabs
IPR2023-00628
Netflix. Ex. 1001

U.S. PATENT DOCUMENTS

5,895,471	A	4/1999	King et al.	
6,049,892	A	4/2000	Casagrande et al.	
6,076,166	A	6/2000	Moshfeghi et al.	
6,161,140	A	12/2000	Moriya	
6,167,441	A	12/2000	Himmel	
6,223,289	B1	4/2001	Wall et al.	
6,275,692	B1	8/2001	Skog	
6,311,215	B1	10/2001	Bakshi et al.	
6,430,624	B1	8/2002	Jamtgaard et al.	
6,438,576	B1	8/2002	Huang et al.	
6,587,880	B1	7/2003	Saigo et al.	
6,912,385	B2 *	6/2005	Namba et al.	455/419
2001/0037192	A1	11/2001	Shimamoto et al.	
2001/0047477	A1	11/2001	Chiang	
2002/0065944	A1	5/2002	Hickey et al.	
2002/0078253	A1	6/2002	Szondy et al.	
2002/0194219	A1	12/2002	Bradley et al.	
2002/0194473	A1	12/2002	Pope et al.	
2003/0017826	A1	1/2003	Fishman et al.	
2003/0027581	A1 *	2/2003	Jokinen et al.	455/456
2003/0054794	A1	3/2003	Zhang	
2003/0060188	A1 *	3/2003	Gidron et al.	455/408
2003/0084165	A1	5/2003	Kjellberg et al.	
2003/0101329	A1	5/2003	Lahti et al.	
2004/0024867	A1	2/2004	Kjellberg	
2004/0054787	A1	3/2004	Kjellberg et al.	
2004/0248570	A1	12/2004	Denenberg et al.	
2005/0071418	A1	3/2005	Kjellberg et al.	

FOREIGN PATENT DOCUMENTS

WO	WO 98/35469	A2	8/1998
WO	WO 98/35469	A3	8/1998
WO	WO 01/97482	A1	12/2001
WO	WO 02/23857	A2	3/2002
WO	WO 02/27543	A2	4/2002

OTHER PUBLICATIONS

Ellipsus Systems: "Ellipsus' Mobile Application Provisioning System", White Paper, [Online] Sep. 23, 2001, pp. 0-10, XP-002266188.

Erik Bladh et al., "GPRS—Applicability and Expectations", Växjö University, School of Mathematics and Systems Enigneering, Reports from MSI, Aug. 2002, pp. 1-64.

"A Vision for Dynamic Java Services Provisioning, The Java Services Vending Machine Concept", Jun. 2001, Version 1.0, Sun Microsystems, Inc., pp. 1-25.

Sheila Riley, "Sun-Microsoft Spat Now Carrying Over To Wireless World", Investor's Business Daily, 1 page.

* cited by examiner

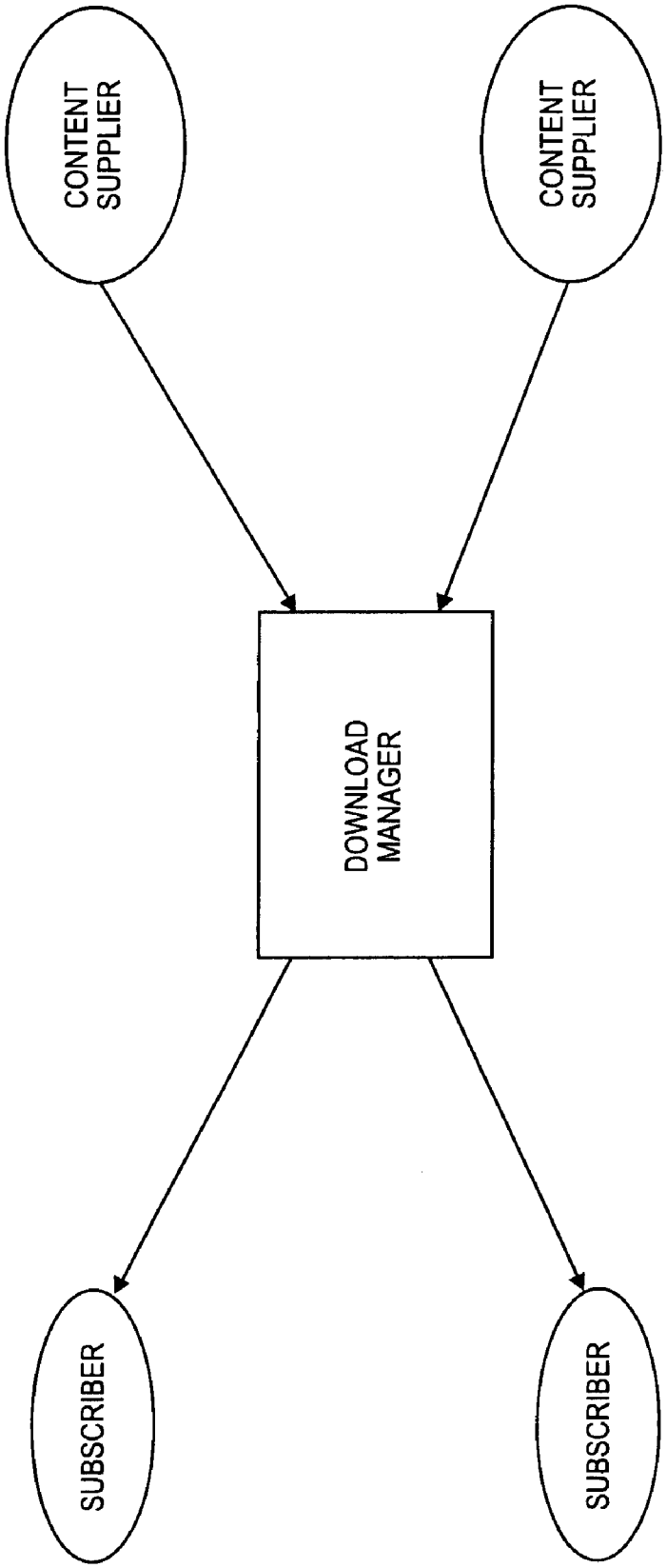
SUBSCRIBER
SUBSCRIBER
DOWNLOAD MANAGER
CONTENT SUPPLIER
CONTENT SUPPLIER

FIG. 1

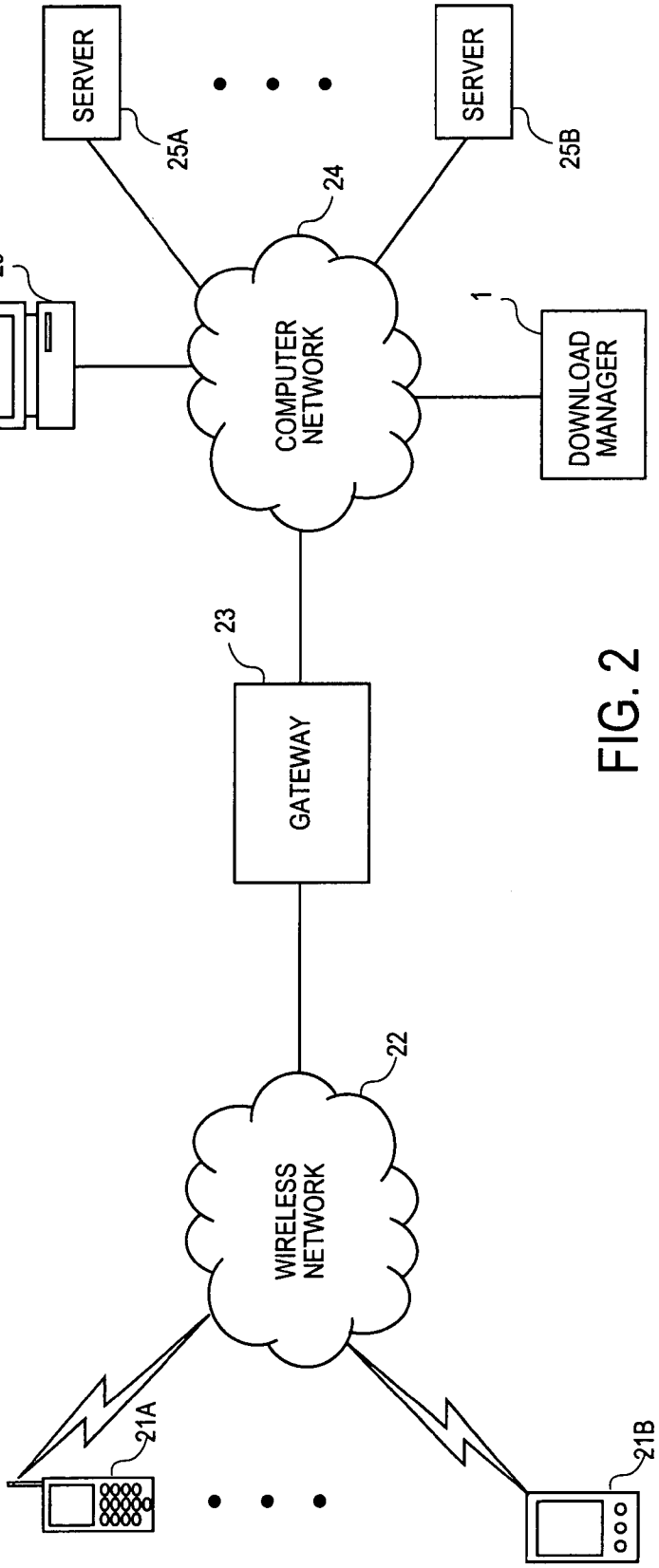
SERVER
25A
SERVER
25B
24
29
COMPUTER NETWORK
1
DOWNLOAD MANAGER
23
GATEWAY
22
WIRELESS NETWORK
21A
21B

FIG. 2

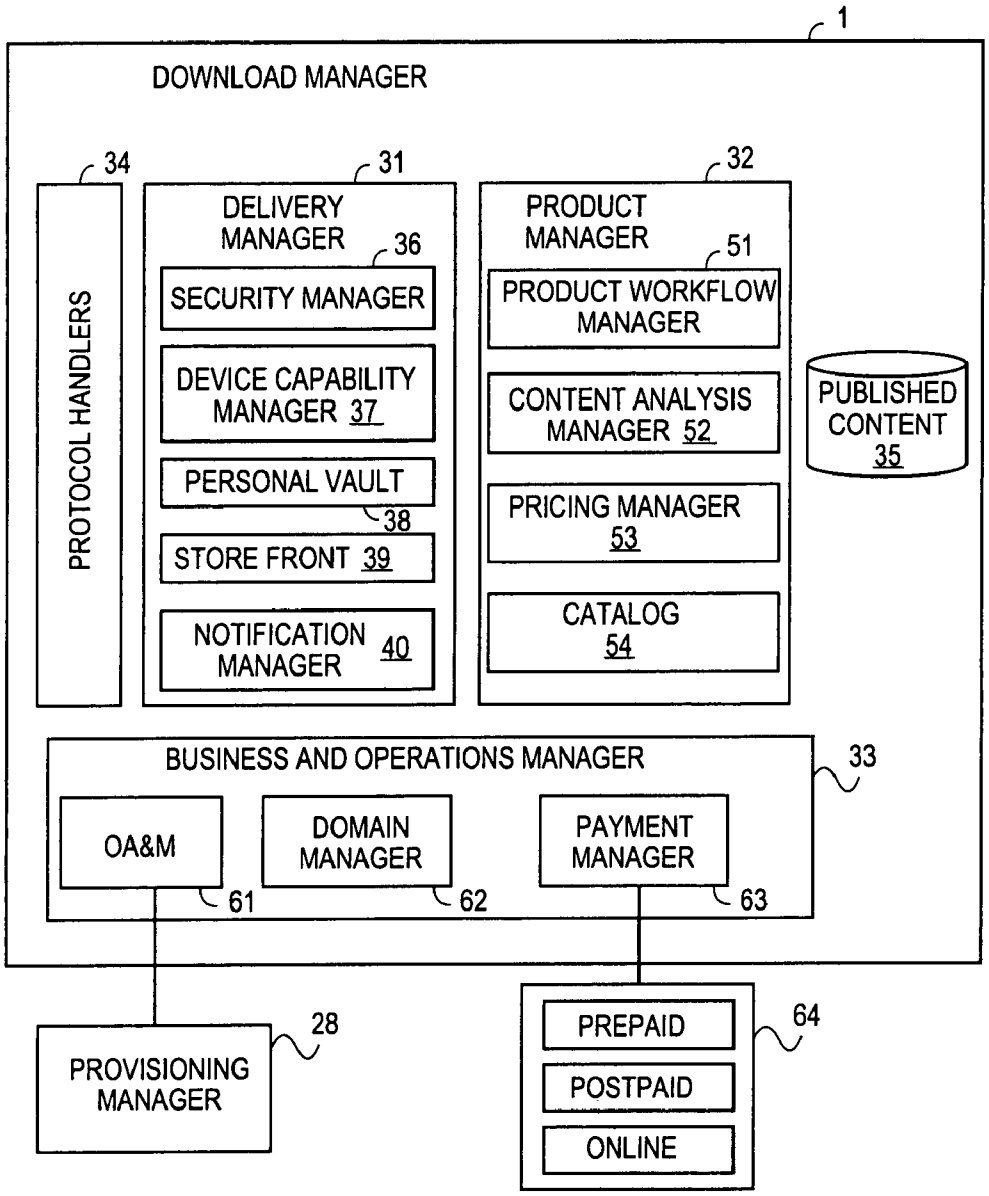
1
DOWNLOAD MANAGER
34
PROTOCOL HANDLERS
31
DELIVERY MANAGER
36
SECURITY MANAGER
DEVICE CAPABILITY MANAGER 37
PERSONAL VAULT
38
STORE FRONT 39
NOTIFICATION MANAGER 40
32
PRODUCT MANAGER
51
PRODUCT WORKFLOW MANAGER
CONTENT ANALYSIS MANAGER 52
PRICING MANAGER 53
CATALOG 54
PUBLISHED CONTENT 35
BUSINESS AND OPERATIONS MANAGER
33
OA&M
DOMAIN MANAGER
PAYMENT MANAGER
61
62
63
PROVISIONING MANAGER
28
PREPAID
POSTPAID
ONLINE
64

FIG. 3

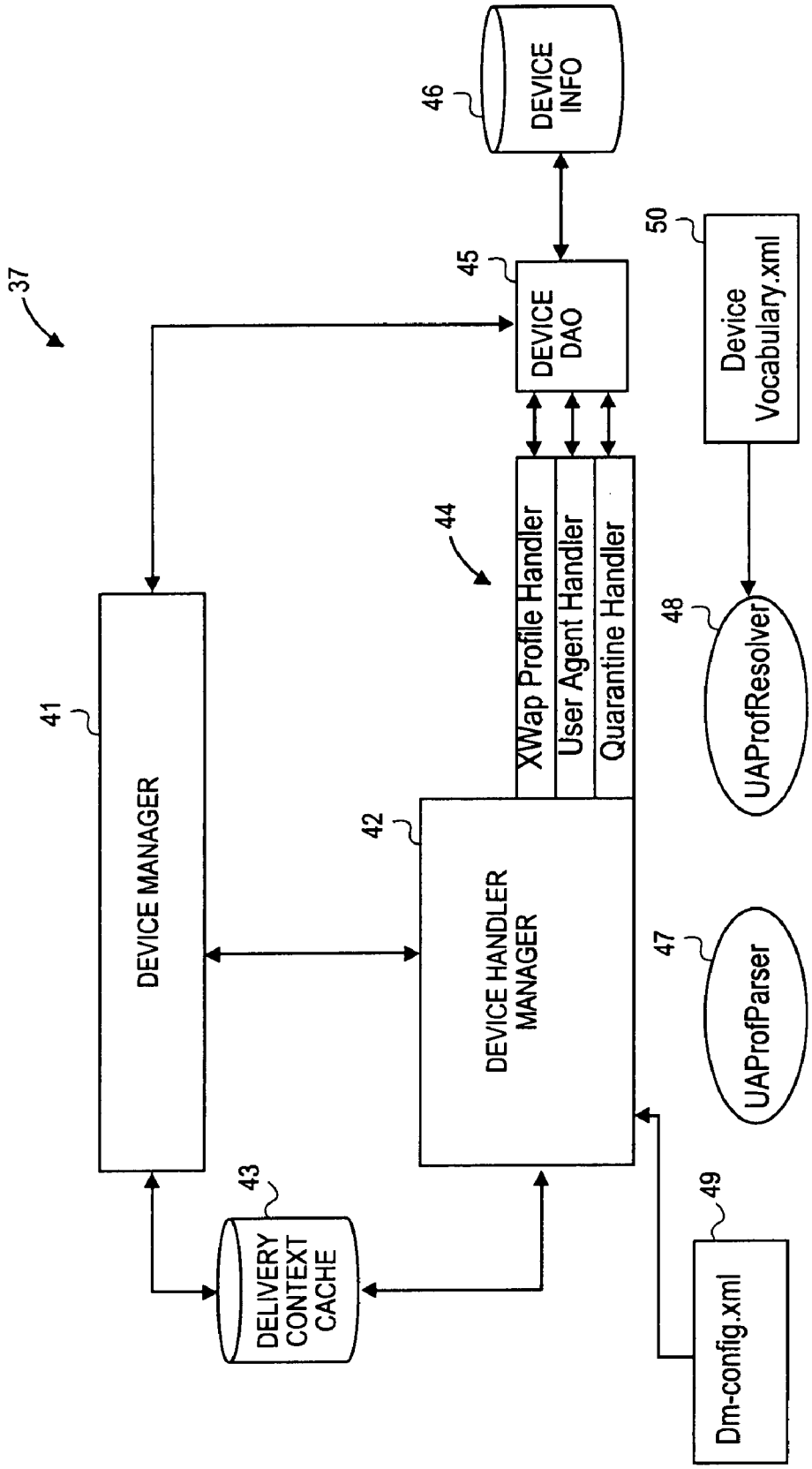
37
41
DEVICE MANAGER
43
DELIVERY CONTEXT CACHE
42
DEVICE HANDLER MANAGER
44
XWap Profile Handler
User Agent Handler
Quarantine Handler
45
DEVICE DAO
46
DEVICE INFO
47
UAProfParser
48
UAProfResolver
49
Dm-config.xml
50
Device Vocabulary.xml

FIG. 4

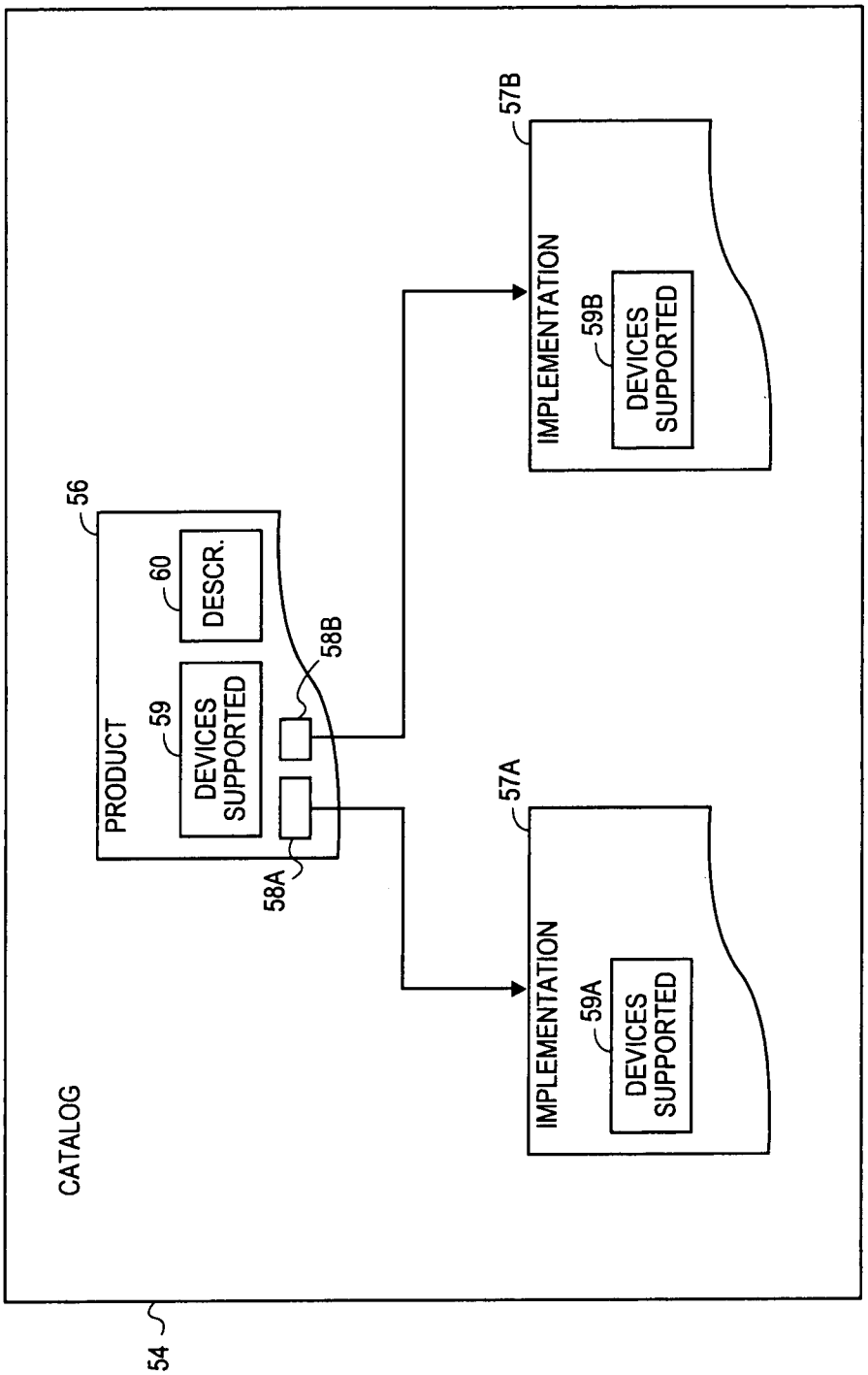
CATALOG
54
PRODUCT
56
DEVICES SUPPORTED
59
DESCR.
60
58A
58B
IMPLEMENTATION
57A
DEVICES SUPPORTED
59A
IMPLEMENTATION
57B
DEVICES SUPPORTED
59B

FIG. 5

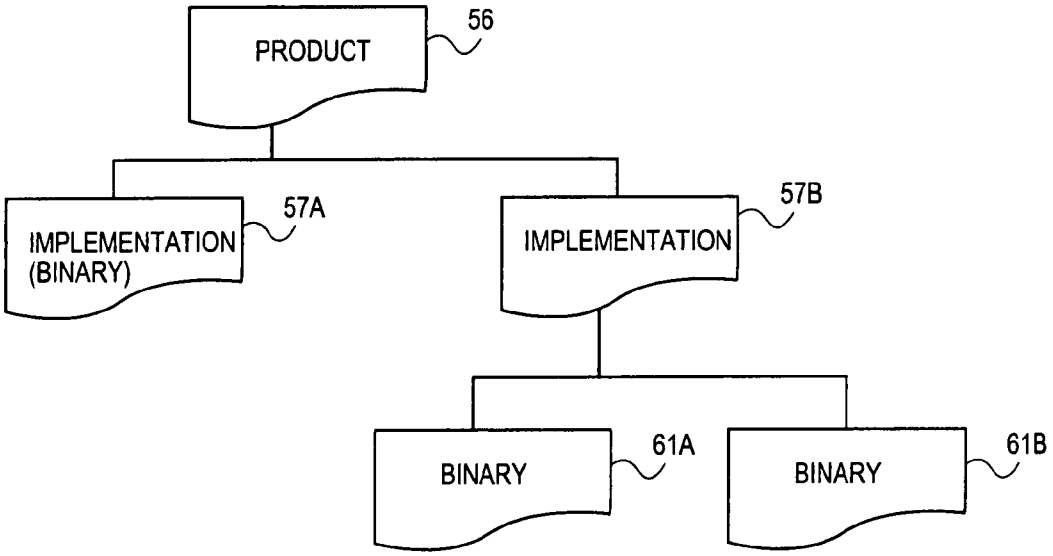
PRODUCT
56
IMPLEMENTATION (BINARY)
57A
IMPLEMENTATION
57B
BINARY
61A
BINARY
61B

FIG. 6

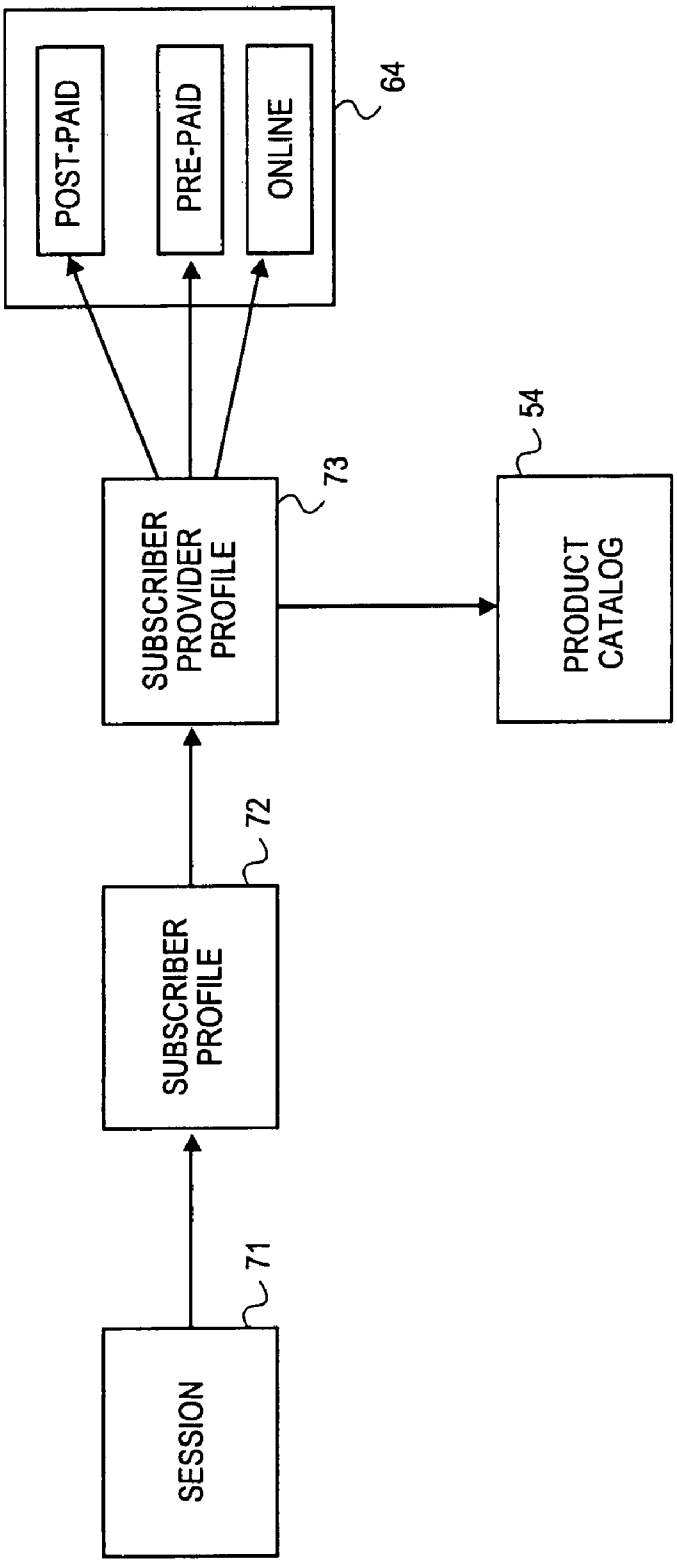
SESSION
71
SUBSCRIBER PROFILE
72
SUBSCRIBER PROVIDER PROFILE
73
POST-PAID
PRE-PAID
ONLINE
64
PRODUCT CATALOG
54

FIG. 7

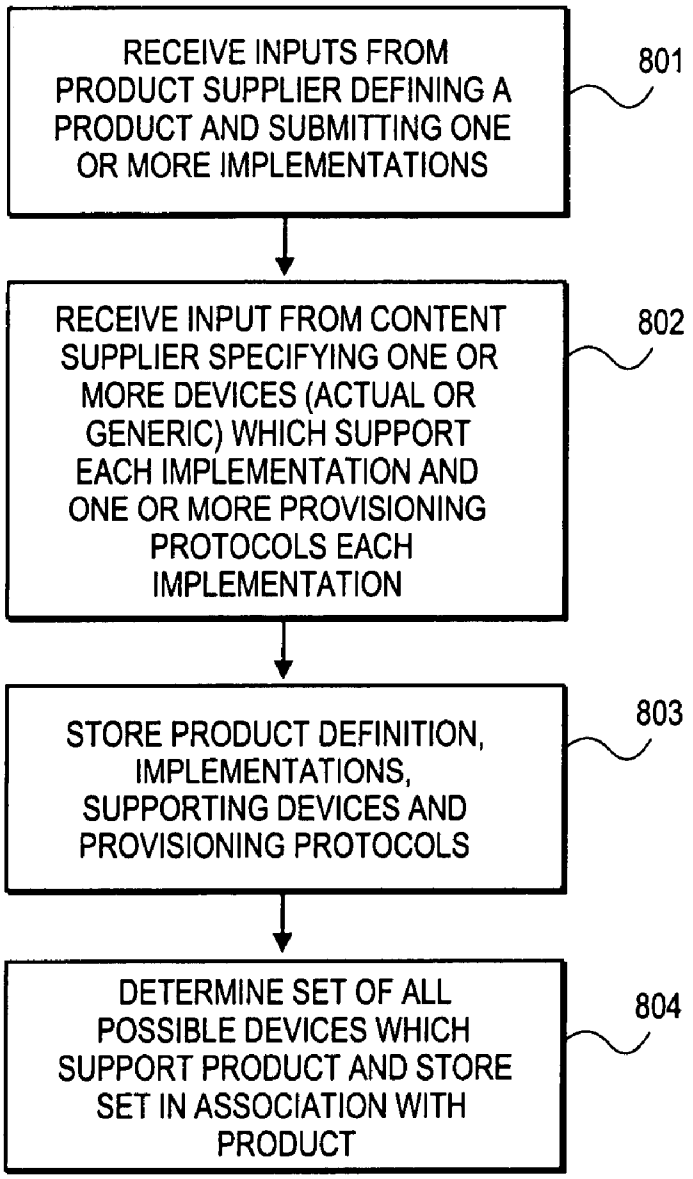
RECEIVE INPUTS FROM PRODUCT SUPPLIER DEFINING A PRODUCT AND SUBMITTING ONE OR MORE IMPLEMENTATIONS
801
RECEIVE INPUT FROM CONTENT SUPPLIER SPECIFYING ONE OR MORE DEVICES (ACTUAL OR GENERIC) WHICH SUPPORT EACH IMPLEMENTATION AND ONE OR MORE PROVISIONING PROTOCOLS EACH IMPLEMENTATION
802
STORE PRODUCT DEFINITION, IMPLEMENTATIONS, SUPPORTING DEVICES AND PROVISIONING PROTOCOLS
803
DETERMINE SET OF ALL POSSIBLE DEVICES WHICH SUPPORT PRODUCT AND STORE SET IN ASSOCIATION WITH PRODUCT
804

FIG. 8

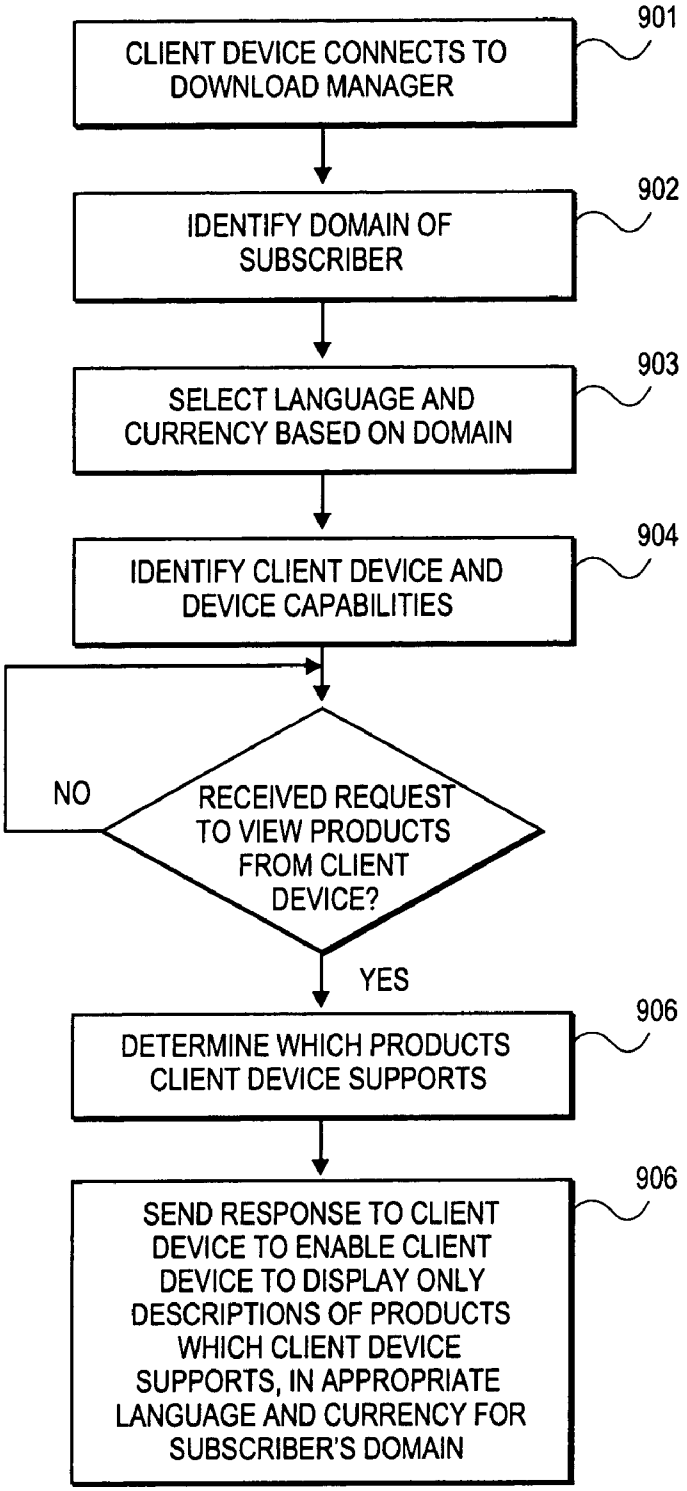
CLIENT DEVICE CONNECTS TO DOWNLOAD MANAGER
901
IDENTIFY DOMAIN OF SUBSCRIBER
902
SELECT LANGUAGE AND CURRENCY BASED ON DOMAIN
903
IDENTIFY CLIENT DEVICE AND DEVICE CAPABILITIES
904
RECEIVED REQUEST TO VIEW PRODUCTS FROM CLIENT DEVICE?
NO
YES
DETERMINE WHICH PRODUCTS CLIENT DEVICE SUPPORTS
906
SEND RESPONSE TO CLIENT DEVICE TO ENABLE CLIENT DEVICE TO DISPLAY ONLY DESCRIPTIONS OF PRODUCTS WHICH CLIENT DEVICE SUPPORTS, IN APPROPRIATE LANGUAGE AND CURRENCY FOR SUBSCRIBER'S DOMAIN
906

FIG. 9

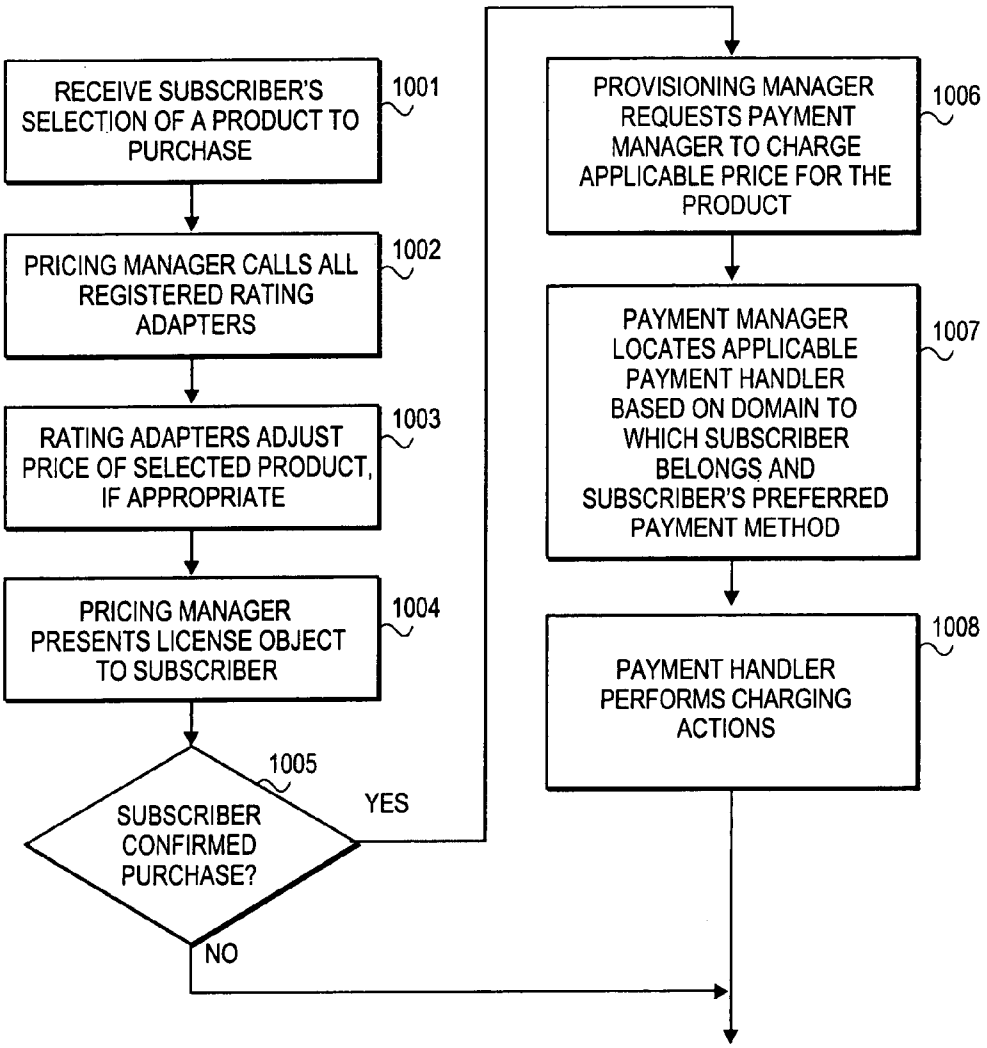
RECEIVE SUBSCRIBER'S SELECTION OF A PRODUCT TO PURCHASE
1001
PRICING MANAGER CALLS ALL REGISTERED RATING ADAPTERS
1002
RATING ADAPTERS ADJUST PRICE OF SELECTED PRODUCT, IF APPROPRIATE
1003
PRICING MANAGER PRESENTS LICENSE OBJECT TO SUBSCRIBER
1004
SUBSCRIBER CONFIRMED PURCHASE?
1005
YES
NO
PROVISIONING MANAGER REQUESTS PAYMENT MANAGER TO CHARGE APPLICABLE PRICE FOR THE PRODUCT
1006
PAYMENT MANAGER LOCATES APPLICABLE PAYMENT HANDLER BASED ON DOMAIN TO WHICH SUBSCRIBER BELONGS AND SUBSCRIBER'S PREFERRED PAYMENT METHOD
1007
PAYMENT HANDLER PERFORMS CHARGING ACTIONS
1008

FIG. 10

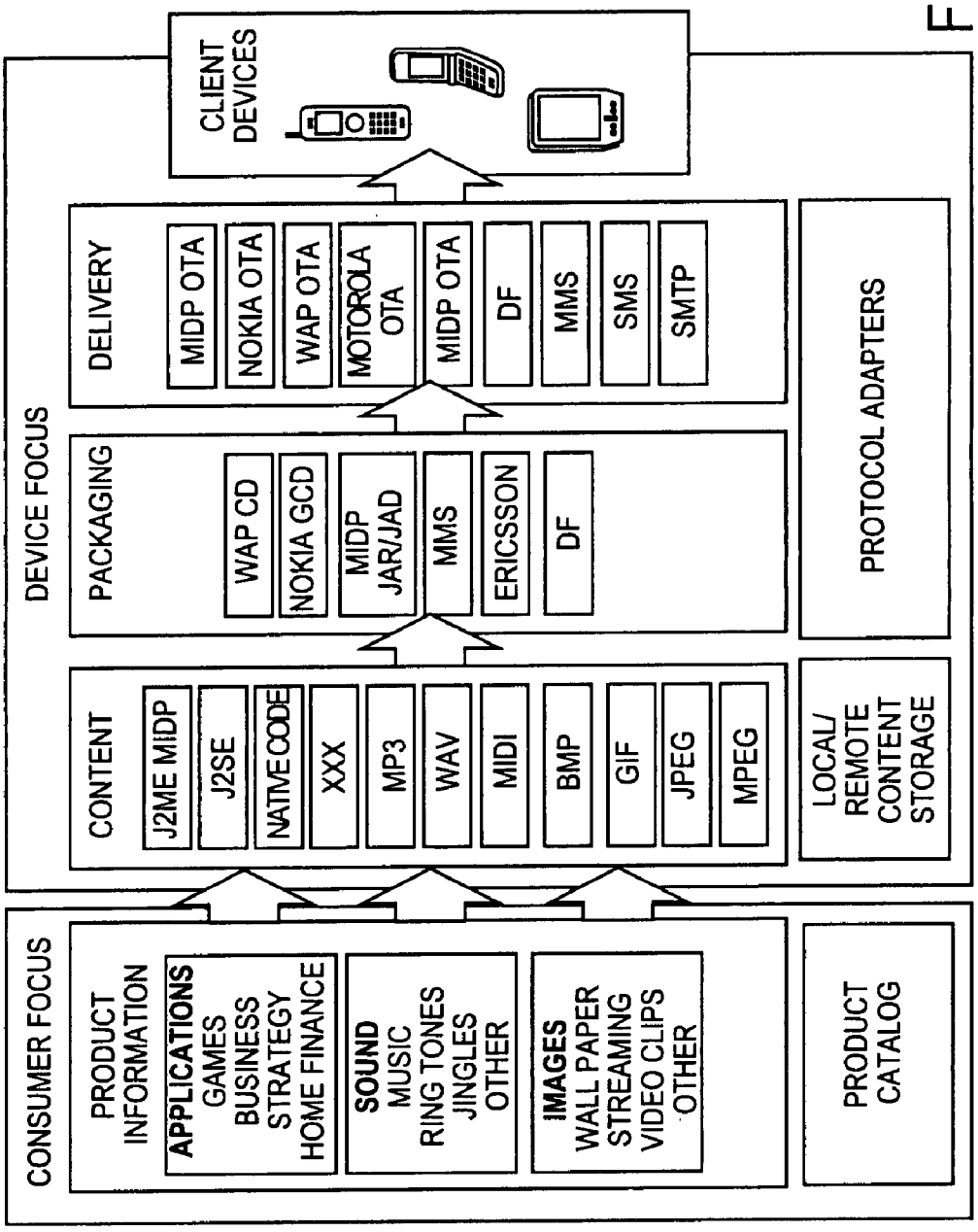
CONSUMER FOCUS
PRODUCT INFORMATION
APPLICATIONS
GAMES
BUSINESS
STRATEGY
HOME FINANCE
SOUND
MUSIC
RING TONES
JINGLES
OTHER
IMAGES
WALL PAPER
STREAMING
VIDEO CLIPS
OTHER
PRODUCT CATALOG
DEVICE FOCUS
CONTENT
J2ME MIDP
J2SE
NATIVE CODE
XXX
MP3
WAV
MIDI
BMP
GIF
JPEG
MPEG
LOCAL/ REMOTE CONTENT STORAGE
PACKAGING
WAP CD
NOKIA GCD
MIDP JAR/JAD
MMS
ERICSSON
DF
PROTOCOL ADAPTERS
DELIVERY
MIDP OTA
NOKIA OTA
WAP OTA
MOTOROLA OTA
MIDP OTA
DF
MMS
SMS
SMTP
CLIENT DEVICES

FIG. 11

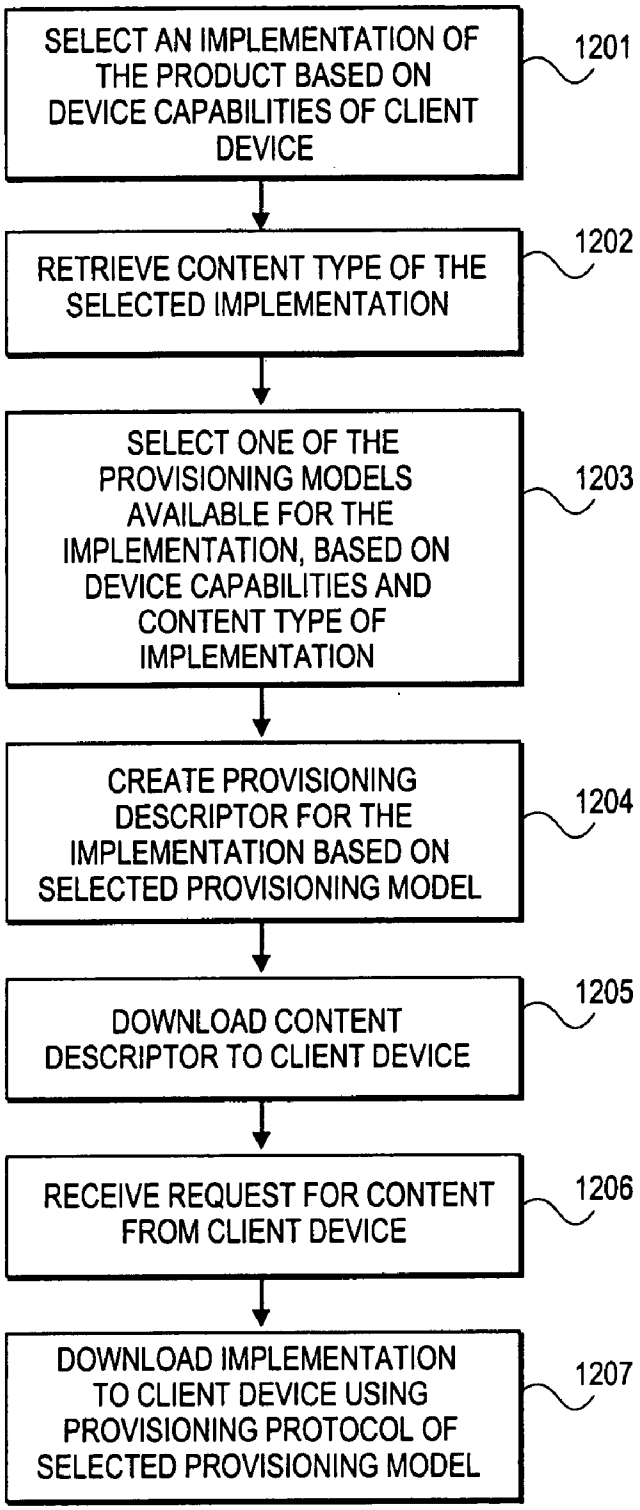
SELECT AN IMPLEMENTATION OF THE PRODUCT BASED ON DEVICE CAPABILITIES OF CLIENT DEVICE
1201
RETRIEVE CONTENT TYPE OF THE SELECTED IMPLEMENTATION
1202
SELECT ONE OF THE PROVISIONING MODELS AVAILABLE FOR THE IMPLEMENTATION, BASED ON DEVICE CAPABILITIES AND CONTENT TYPE OF IMPLEMENTATION
1203
CREATE PROVISIONING DESCRIPTOR FOR THE IMPLEMENTATION BASED ON SELECTED PROVISIONING MODEL
1204
DOWNLOAD CONTENT DESCRIPTOR TO CLIENT DEVICE
1205
RECEIVE REQUEST FOR CONTENT FROM CLIENT DEVICE
1206
DOWNLOAD IMPLEMENTATION TO CLIENT DEVICE USING PROVISIONING PROTOCOL OF SELECTED PROVISIONING MODEL
1207

FIG. 12

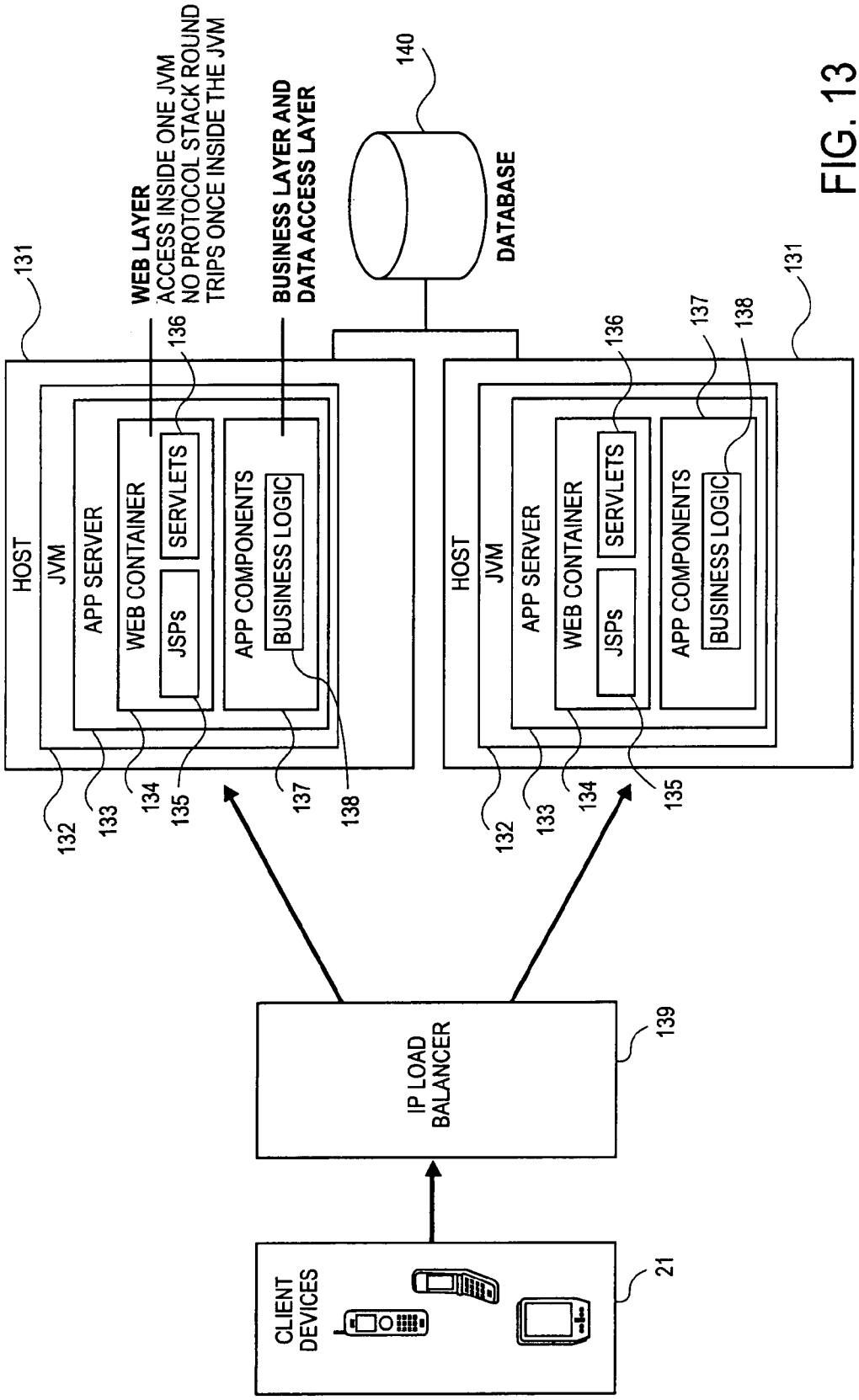
WEB LAYER
ACCESS INSIDE ONE JVM
NO PROTOCOL STACK ROUND
TRIPS ONCE INSIDE THE JVM
BUSINESS LAYER AND
DATA ACCESS LAYER
DATABASE
140
131
136
137
138
HOST
JVM
APP SERVER
WEB CONTAINER
SERVLETS
JSPs
APP COMPONENTS
BUSINESS LOGIC
132
133
134
135
IP LOAD
BALANCER
139
CLIENT
DEVICES
21

FIG. 13

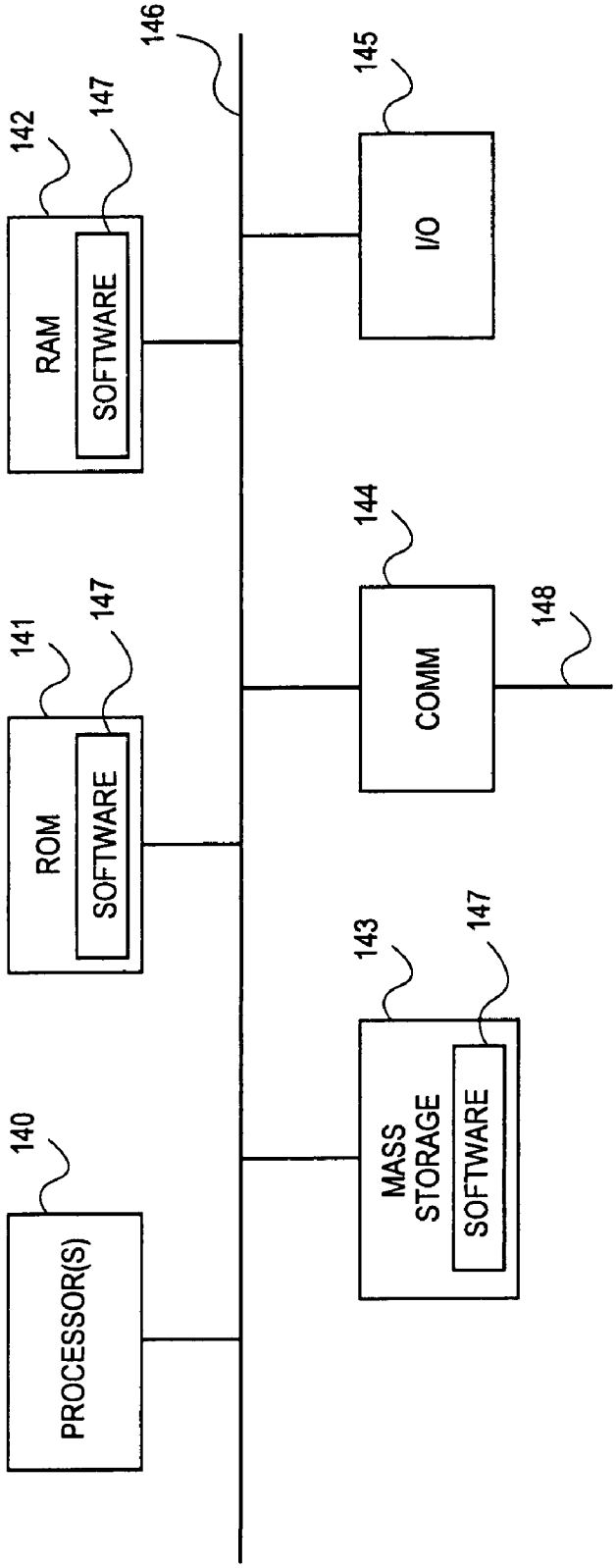
140
PROCESSOR(S)
141
ROM
SOFTWARE
147
142
RAM
SOFTWARE
147
146
143
MASS
STORAGE
SOFTWARE
147
144
COMM
148
145
I/O

FIG. 14

DEVICE CAPABILITY BASED DISCOVERY, PACKAGING AND PROVISIONING OF CONTENT FOR WIRELESS MOBILE DEVICES

This application claims the benefit of U.S. provisional patent applications Nos.: 60/393,024; 60/392,383; 60/393,041; and 60/392,999, each of which was filed on Jun. 28, 2002, and each of which is incorporated herein by reference.

FIELD OF THE INVENTION

At least one embodiment of the present invention pertains to systems and methods for providing digital content to wireless services subscribers, and more particularly, to facilitating management and delivery of digital content from multiple content suppliers to multiple wireless services subscribers in multiple domains.

BACKGROUND

Personal mobile communication/computing devices, such as cellular telephones, personal digital assistants (PDAs) and two-way pagers, have become commonplace in many countries. These devices are referred to collectively herein as "mobile devices" or "wireless devices". The current state-of-the-art of mobile devices has advanced far beyond that of their predecessors. For example, early cellular telephones were used analog signals to communicate over wireless telecommunications networks (or simply "wireless networks") and were nothing more than mobile telephones. Today's cellular telephones typically are all digital and provide many other functions in addition to telephony capability. For example, many of the latest generation of mobile telephones (and other mobile devices) allow their users to play games, access World Wide Web pages, exchange email, exchange and download files, exchange short messaging service (SMS) messages, and send and receive video.

With new mobile devices providing a wider range of capabilities, there is increasing demand among the users of these devices (i.e., wireless services subscribers) for new and interesting types of digital content that can be used on these mobile devices, such as games and other applications, images, ring tones, screensavers, wallpapers, etc. Although newer mobile devices often come pre-provisioned with certain digital products when first acquired by the subscriber, it is desirable to allow subscribers to acquire additional digital products for use in their mobile devices as such products become available. While this capability already exists, currently subscribers acquire digital content directly from the content suppliers (typically via the wireless network and the Internet). This process is inconvenient if a subscriber wishes to acquire various different items of digital content from different suppliers, since the subscriber must navigate to the web sites of different suppliers. Therefore, it is further desirable to make many different types of digital content available to subscribers at one time through a centralized "store".

From the content supplier's perspective, another impediment to the efficient distribution of digital content is the fact that different mobile devices often require different content packaging formats and provisioning protocols. In order to make a given item of digital content available to multiple mobile devices supporting different provisioning models, a digital content supplier will normally deploy that item of content multiple times, packaging it differently for each of

the provisioning models. For example, an image to be delivered to Nokia-COD phones and Sprint-GCD OTA phones would be deployed twice, custom-packaged for each of those two delivery modes. It is very burdensome for digital content suppliers to have to package and provision the digital content they produce in a manner that is suitable for all of the devices in the marketplace. Moreover, it is difficult for content suppliers to keep up with the constant changes in device capabilities for the many mobile devices in the marketplace. Consequently, there is often a gap between the interoperability of a given digital product and how effective it can be used on a device. Therefore, the problem exists of how to efficiently allow many digital content providers to distribute many different types of digital content to subscribers using many different types of mobile devices.

A related problem is how to charge subscribers for the digital content they acquire. In one known system. The wireless carrier's system is capable of connecting to an external billing system and provides billing events to that system when a subscriber performs a chargeable action. However, this scenario assumes that all subscribers belong to a single organization that also owns the billing system. Furthermore, it assumes that a single currency is used. Yet many multi-national organizations have a parent company with subsidiaries in many countries. Different countries have different currencies, taxes and other charges. Each subsidiary may implement its own support/business infrastructure to deal with local regulations and customs, particularly with respect to the billing process. Consequently, the carrier's system must be able to generate billing events and direct them to the appropriate external billing system. Furthermore, it must be able to present the customer with a charge for each service, in the applicable currency and expressed in a way that is appropriate considering local taxes, fees and other regulations.

One way to address this problem, which only partially solves it, is to use credit card systems. In this scenario, the credit card company acts as an intermediary in the billing process. This approach consolidates all billing at one point. Settlement is done between the product/service provider and the subscriber provider (e.g., the wireless carrier) for a fee. This approach, however, does not handle the currency, taxes, fees and regulations issues mentioned above.

SUMMARY OF THE INVENTION

One aspect of the invention is a method and apparatus for providing access to content for use on wireless communication devices. Multiple items of content are stored in a server system, to be made available for use in wireless communication devices used by multiple wireless services subscribers. Each of the items of content is associated in the server system with multiple different provisioning models for provisioning the content in wireless communication devices. Each of the provisioning models corresponds to a different set of device capabilities.

In another aspect of the invention, multiple different implementations of at least one of the items of content are received, where each implementation corresponds to a different set of device capabilities. A product catalog containing a description of the items of content is also maintained. The product catalog includes, in association with each item of content, a reference to each implementation of the item of content.

Other features of the present invention will be apparent from the accompanying drawings and from the detailed description which follows.

BRIEF DESCRIPTION OF THE DRAWINGS

One or more embodiments of the present invention are illustrated by way of example and not limitation in the figures of the accompanying drawings, in which like references indicate similar elements and in which:

FIG. **1** illustrates the relationship between the download manager, content suppliers, and subscribers;

FIG. **2** shows a network architecture in which a download manager in accordance with the invention can be deployed;

FIG. **3** schematically shows the components of the download manager;

FIG. **4** shows the components of the device capability manager;

FIG. **5** shows the relationship between a product entry and implementations of the product in the product catalog;

FIG. **6** shows the relationship between a product and its implementations;

FIG. **7** shows how various data elements are used in the billing process;

FIG. **8** illustrates a simplified process by which a product can be listed in the product catalog in a way that facilitates device-tailored product discovery and provisioning;

FIG. **9** shows a process by which the product catalog is displayed to a subscriber;

FIG. **10** shows a process by which a purchase of a product can be made using the download manager;

FIG. **11** illustrates the separation, within the download manager, of content from how the content is provisioned;

FIG. **12** illustrates a process by which a product is provisioned in a client device using the appropriate one of various provisioning protocols;

FIG. **13** shows an example of the software deployment architecture of the download manager; and

FIG. **14** illustrates the hardware architecture of a computer system in which the download manager can be implemented.

DETAILED DESCRIPTION

A system and method for efficiently managing the publication, purchase and delivery of digital content from multiple content suppliers to multiple wireless services subscribers in multiple domains are described below. As used in this description, the terms "digital content", "digital product", "content", and "product" are used interchangeably and mean software and/or data embodying things such as games and other applications, applets or the like; images; screensavers; wallpaper; ring tones; etc., particularly (but not necessarily exclusively) those designed for use in mobile devices such as cellular telephones, personal digital assistants (PDAs), and other small-footprint wireless/mobile devices. For convenience the terms "purchase" or "buy" are used to mean either actual purchase or any other conventional way in which a subscriber can acquire rights to use digital content (e.g., by acquiring a license).

Overview

As described in greater detail below, a system which manages publication, purchase and delivery of digital content is implemented in a network server system that includes one or more server computer systems on a network. The server system includes an application server referred to herein as the "download manager". Digital content suppliers can publish and manage their products using the download manager via a computer network, such as the Internet, and can make their products available to wireless services subscribers through the download manager for purchase or licensing. Subscribers can access the server system via wireless networks to purchase rights to download and use the digital content on their wireless communication devices.

FIG. **1** illustrates the relationship between the download manager, content suppliers, and wireless services subscribers (users of mobile devices). The download manager **1** acts as an intermediary between multiple content suppliers **2** (e.g., **2**A, **2**B, etc.) and multiple customers (e.g., **3**A, **3**B, etc.), e.g., wireless services subscribers, belonging to multiple "domains". In the supply chain process for distribution of digital content, a content supplier **2** adds a digital product to the set of products managed by the download manager **1** (i.e., products "in the store"). The supplier **2** then associates various attributes with the product. Once the product has been submitted to the product store, a product administrator associated with the download manager **1** verifies its quality and determines whether it should be made available to the customers **2** or if it should be rejected. Once the product is approved, customers **2** can buy the product by accessing the download manager **1** from their client devices.

To facilitate description, it is henceforth assumed herein that the customers are users of mobile devices and, therefore, are subscribers of warless services (although that need not be the case); thus, customers are henceforth called "subscribers" herein. Note, however, that the techniques described herein need not be limited to wireless services subscribers or mobile client devices.

Domains and Partner Management

Among other advantageous features, the download manager **1** facilitates partner management. A "partner", as the term is used herein, is an entity that holds a relationship to a subscriber for purposes of delivery of digital products, billing, returns, etc. For example, a partner can be an Internet portal, an Internet Service Provider (ISP), a wireless carrier, an application service provider (ASP), etc. A partner also appoints a number of content suppliers to supply products to the product store. Partner management is the concept of being able to assign responsibility for various parts of the digital product supply chain to different categories of users.

The entities "within the store" (managed by the download manager **1**) belonging to a partner are partitioned into entities called "domains". A "domain", as the term is used herein, is an entity, defined in the download manager **1**, that describes the billing relationship between a partner and a set of subscribers, as well as describing a partitioning of product space and administrative responsibilities. As such, a domain can represent a grouping of wireless services subscribers, such as a wireless carrier or a subsidiary of a wireless carrier, a business enterprise, or any other defined group of wireless services subscribers. The domain manager maintains a database of data defining the associations between domains and partners, administrators, subscribers and products.

Domains facilitate the proper billing of subscribers from multiple organizations and/or with multiple wireless carriers (or other subscriber providers), and facilitate presentation of product descriptions to subscribers in the languages and currencies appropriate for their local countries or regions.

The domain entity is also used in the download manager **1** to classify other entities as belonging to a domain **1**-to-**1**, belonging to a domain **1**-to-many, many-to-many, or not

belonging to a domain. In general, a domain captures the following relationships to the subscribers:

1) how subscribers are charged for the products they purchase and in which currency;
2) to which user groups the subscribers can belong;
3) from which product categories the subscribers can select products; and
4) which products are accessible to the subscribers.

In certain embodiments of the invention, a domain has the following properties:

a name (localized)
a description (localized)
a uniform resource locator (URL) to a web site giving further description of the domain
a contact address including contact person, contact telephone numbers, fax numbers and postal address
the currency to use for billing and display purposes
reference to handlers for various different payment models (e.g., online payment, pre-payment and post-payment)
a set of references to rating handlers used for adjustment of product prices

The name and the descriptions have localized values for the set of languages registered in the system.

The distinction between domain entities and non-domain entities also forms the basis for delegated administration. More specifically, for each domain, the responsibility for supplying products, approving or rejecting products, etc. can be delegated to different suppliers and administrators. Thus, each domain is associated with a set of administrators that handle the products in the store. In certain embodiments of the invention, these administrators include a system administrator, a domain administrator, a product administrator, and a customer care administrator.

The system administrator is the overall administrator for the download manager **1**, who can create new domains and their respective domain administrators to help regulate it. He also maintains the ability to control non-domain entities such as devices, content types, etc. The domain administrator is the overall administrator for a given domain. He has the ability to manage all of the suppliers and subscribers for his domain as well as create product and customer care administrators for the domain. The product administrator is responsible for managing the entire product lifecycle for the content submitted by the domain's suppliers. The customer care administrator is responsible for managing subscribers belonging to the domain. Each subscriber belongs to only one domain and can only see products for the domain to which he belongs.

A partner appoints a number of content suppliers who provide products to the product store. A supplier can only submit products to the domain(s) to which he belongs. The relationship between suppliers and domains is many-to-many. Products are approved and deployed separately for each domain.

From the content supplier's perspective, all entities in the download manager **1** that are domain-related are only selectable based on the domains to which the supplier can provide products. For example, a supplier can only choose from among the product categories and license models that belong to the domains to which the supplier has the right to supply products.

Network Environment

FIG. **2** shows a network architecture in which a download manager in accordance with the invention can be advantageously deployed. One or more wireless networks **22** are connected to a computer network **24** through corresponding gateways **23**. The computer network **24** may be the Internet, although alternatively, it could be essentially any other type of computer network, such as a corporate intranet, a local area network (LAN), etc., or a combination of such networks.

A number of mobile client devices **21** (e.g., **21**A, **21** B, etc.) operate on each wireless network **22**. A number of servers **25** (e.g., **5**A, **5**B, etc.) operate on the computer network **24** to provide a variety of services for the mobile devices **21** and/or to one or more non-mobile client devices **29** coupled to the computer network **24**. For example, the servers **25** may include World Wide Web servers, file servers, application servers, etc.

Each gateway **23** is operated by the wireless carrier of the wireless network to which it is directly connected. Each gateway **23** provides an interface between a particular wireless network **22** and the computer network **24** (e.g., the Internet), providing routing and, if necessary, appropriate protocol translation and/or content transcoding. In some cases, the gateway **23** may be a standalone device or system. In other cases, the gateway **3** may be part of a more-capable server system that provides additional value-added services to users of client devices **21**; such as a proxy service **27**, a provisioning manager **28**, etc.

A download manager **1** in accordance with the present invention is connected to the computer network **24**, either directly (as shown) or indirectly. The download manager **1** can be, but does not have to be, operated by a wireless carrier.

Download Manager

FIG. **3** schematically shows the download manager in greater detail, according to certain embodiments of the invention. In the illustrated embodiment, the major components of the download manager include a delivery manager **3**l, a product manager **32**, a business & operations manager **33**, and multiple protocol handlers **34**. Each of these components is preferably implemented as software, data, or a combination of software and data. However, in other embodiments, some or all of these components could be implemented in hardwired circuitry. The download manager **1** may also include a database **35** of published content, as shown, although at least some of the published content may instead be stored remotely.

The product manager **32** is the download manager's interface to the various content suppliers and provides centralized product cataloging (including enabling qualified content suppliers to register content for analysis and publication) and complete product life cycle support (i.e., management of content submission, analysis, approval, publication, use, maintenance, and eventual deactivation). The term "publication", as used herein, means making a product available on the download manager to wireless services subscribers for downloading to their client devices. The delivery manager **31** is the download manager's interface to the various subscribers and is responsible for delivering purchased digital content to subscribers, including invoking a protocol handler appropriate for communicating with each requesting mobile device. The protocol handlers **34** support multiple product discovery protocols and multiple product delivery protocols simultaneously. Hence, the protocol handlers **34** include product discovery handlers (e.g., a WAP handler, a Web handler, a Motorola Discovery handler) and product delivery handlers (e.g., a MIDP OTA handler, a Motorola OTA handler, a Nokia COD OTA handler). The business & operations manager **33** is mainly responsible for

managing domain information and processes for charging subscribers for purchases of content. These components are described further below.

As shown in FIG. **3**, the delivery manager **31** in certain embodiments includes a security manager **36**, a device capability manager **37**, a personal vault **38**, a storefront **39**, and a notification manager **40**. The storefront **39** is a conventional graphical user interface for allowing subscribers to make online purchases. It can be branded to a particular wireless carrier, for example, or other business entity. The security manager **36** is responsible for authentication of subscribers and client devices for purposes of purchasing content and preferably can support multiple authentication schemes, such as HTTP-based authentication, MSISDN/NIA based authentication, etc. The personal vault **38** stores, on a subscriber-by-subscriber basis, information to facilitate digital rights management (DRM), such as product licenses and/or other "purchase" information of the products purchased by each subscriber. This allows a subscriber to remove downloaded content from a mobile device without losing rights to the product, or to recover products on a device in cases of device hard reset, loss, etc.

The notification manager **40** can provide various types of notifications to subscribers using various communication channels, such as email, SMS, and WAP Push. The notification manager **40** can generate notifications automatically, such as notifications of new products or product upgrades, or in response to commands from a system administrator, such as account notifications, notifications of special promotions, etc.

The device capability manager **37** is responsible for device recognition (e.g., supporting device recognition through UAProf using Profile headers and Profile-Diff headers), device capability determination (e.g., retrieving device descriptors using best efforts and appending device capabilities to the session context), and device capability management (e.g., automated management of UAProf capable devices and quarantine of undefined or partially defined devices). As described further below, recognition of devices and their capabilities is used for a variety of purposes, such as to filter the set of available products that a subscriber can discover when connecting to the download manager **1**, to select the appropriate implementations of products that are purchased, and to select the appropriate provisioning model for provisioning a purchased product in a client device.

FIG. **4** shows the components of the device capability manager **37** according to an embodiment of the invention. The device capability manager **37** includes a device manager **41**, a device handler manager **42**, a delivery context cache **43**, a set of device recognition handlers **44**, a device data access object (DAO) **45**, a device information database **46**, a UAProf parser **47**, a UAProf resolver **48**, a dm-config.xml file **49**, and a DeviceVocabulary file **50**. The device information database **46** stores information identifying mobile devices and their corresponding capabilities. The device manager **41** contains all of the business logic that supports the user interface and the rest of the download manager **1**. The device DAO **45** contains all data logic and scripted query language necessary to communicate with the device information database **46**.

The device handler manager **42** is responsible for discovering and determining the types of devices accessing the download manager **1**. Upon startup of the download manager **1**, the device handler manager **42** loads the device recognition handlers **44** ordered by the dm-config.xml file **49**. This order is then used to determine which headers are to be processed first. The delivery context cache **43** is used to help improve performance on subsequent look-ups. If no device capabilities can be found or processed by the chain of handlers **44**, the device handler manager **42** then uses a default delivery context as defined by an administrative user interface.

The illustrated embodiment includes three device recognition handlers **44**: an XwapProfile handler, a UserAgent handler, and a quarantine handler. The XwapProfile handler is responsible for processing the "x-wap-profile" and "x-wap-profil-diff" request headers in requests from mobile (client) devices. It makes use of the UAProf parser **47** to parse RDF-compliant files and the UAProf resolver **48** to resolve the differences of the headers. The UAProf parser **47** parses RDF-compliant files. The UAProf resolver **48** reads resolution rules from the device-vocabulary.xml configuration file **50** and uses these rules to help merge x-wap-profile and x-wap-profile-diff headers.

The UserAgent handler is responsible for processing the "user-agent" request headers. It uses regular expression matching to best match the capabilities with the incoming "user-agent" header. If no user-agent header can be found or one is found but does not match to any existing capabilities, the request header is passed to the next handler in the chain.

The quarantine handler is responsible for processing any "accept" request headers. If the quarantine handler finds a user-agent header, it will add a new record in a device match table. Otherwise, it will simply return a delivery context with a set of capabilities determined by the "accept" headers and capabilities already defined by the default device profile.

The device capability manager **37** is capable of managing client devices in either of two categories: actual devices and generic devices. In response to client device requests, the device capability manager **37** uses actual device information from the request and any applicable stored generic device definitions to recognize the accessing client device and its capabilities. The system administrator can define devices (or device capabilities) in either category. An actual device is a particular make and model of client device, such as "Nokia 6310". Actual devices are identified solely from incoming requests, based on the UserAgent and x-wap-profile headers in the requests, for example. A generic device is a predefined device or set of device capabilities. Examples of some generic device definitions are: all Nokia devices (e.g., "vendorname=nokia"), all devices with display size >40, and all devices which support SMS. In response to client device requests, the device capability manager **37** uses the UserAgent or x-wap-profile header to identify the actual device accessing the system and to look up its corresponding capabilities in the device information database **46**, which are combined with any applicable generic device definitions to determine the capabilities of the client device. The use of this information is described further below.

It is useful now to define two types of device capabilities which the device capability manager is able to resolve: static capabilities and active capabilities. As defined in the download manager, "static" capabilities are the well-known set of attributes for a given device which are defined during pre-processing, not on-the-fly. These are associated with a client device as identified in the UserAgent or x-wap-profile headers. Generic devices, as defined above, only have static capabilities. "Active" capabilities represent a dynamic collection of attributes extracted during an interaction between the client device and the download manager, typically from the Accept headers. These two types of device capabilities are stored separately in the device information database **46**.

The ability for a user to discover content based on the static (well-known) capabilities of his device is valuable.

With the number of device manufacturers and content providers in the market, there is often a gap between the interoperability of a given content and how effective it can be run on a device. By using the system's unique ability to capture the capabilities of a device and for content suppliers to select compatible devices for their content, the download manager **1** is capable of targeting supported products to their respective devices for a subscriber. In addition, the download manager **1** is able to easily adapt to the ever-changing modifications to capabilities and requirements and is highly scalable as more devices and content are pushed into the system, without a substantial decrease in performance.

Referring again to FIG. **3**, the product manager **32** in certain embodiments includes a product workflow manager **51**, a content analysis manager **52**, a pricing manager **53**, and a product catalog **54**. The product workflow manager **51** allows the system administrator to define and modify details of the product workflow for processing content submitted by content providers. An example of a product workflow is (n chronological order): 1) submission, 2) content analysis, 3) listing of content in the product catalog, 4) usage of the content, 5) maintenance of content, and 6) content retirement (i.e., cancellation or deletion).

The content analysis manager **52** manages the process of verifying content quality and compliance with various requirements when the content is initially submitted by the content supplier (e.g., compliance with its declared type, content structure resource utilization, etc.). Content must pass the content analysis process satisfactorily before being listed in the product catalog **54** (i.e., published).

The pricing manager **53** allows administrators to add, modify and delete license for products in the store. The pricing manager **53** also includes and invokes a set of rating handlers at the time of purchase, which can adjust the price of the product based on various factors (e.g., promotions, applicable rebates, etc.), as described further below.

The product catalog **54** contains descriptions of all published items of content (products). Referring to FIG. **5**, the catalog **54** includes, for each product entry **56**, a reference **58** to at least one implementation **57** of that product. An implementation **57** can be simply a binary file (a "binary") representing the product. In some cases, however, an implementation **57** may represent two or more binaries **61**, as shown in FIG. **6**. Also as represented in FIG. **5** and FIG. **6**, any particular product may have multiple implementations published on the download manager, each of which may be designed for a different specific client device or set of client devices.

Hence, any particular product entry in the catalog **54** can include references to multiple implementations of the product. However, the products shown to any particular subscriber when the subscriber views the catalog are filtered according to the device capabilities of the subscriber's device. More specifically, only those products that have at least one implementation compatible with the subscriber's device are shown to the subscriber. As shown in FIG. **5**, each implementation entry **57** also includes a list (**59**A or **59**B) of devices supported by that implementation. Each product entry **56** in the catalog **54** includes a list **59** of the devices that are supported by that product. Which represents the aggregation of all of the devices supported by all of the implementations **57** of that product.

In addition, for any particular product, the catalog may include a description **60** of the product in multiple different languages, to accommodate subscribers in different countries. Product descriptions **60** are shown to each subscriber in the appropriate language, and the prices of products are shown in the appropriate currency, according to the domain of which the subscriber is a member. The domain of the subscriber is identified by the domain manager **62**, as described below.

Referring again to FIG. **3**, the business & operations manager **33** in certain embodiments includes an operation administration and management (OA&M) module **61**, a domain manager **62**, and a payment manager **63**. The OA&M module **61** provides a Web based user interface for administering the download manager **1**. It supports role-based delegation of administration duties (e.g., system administrator, domain administrator, product administrator, customer care administrator, etc.) and interfaces with the provisioning manager to provide logging and reporting of key events and transactions.

The payment manager **63** is responsible for the process of charging subscribers when they purchase content and supports multiple different languages and currencies, partitioned by domain. The approach to billing and payment assumes that there are local billing mechanisms in place, each of which has an established relationship to the subscriber already. The local billing mechanism operates in the local currency using the local taxes, fees and other applicable charges for the subscriber's region. It also invoices at intervals that are customary for the region.

In certain embodiments of the invention, a subscriber can select the preferred payment model to use of three available payment models:

Online payment—payment is performed 'just-in-time'. A typical implementation performs the payment transaction at the time of the purchase.

Pre-paid payments—payment is performed before purchase and the purchase is deducted from the pre-paid amount.

Post payments—payment is performed after the purchase by invoice.

A separate payment handler of a set of payment handlers **64** is accessible to the payment manager **63** for each of these payment models (see FIG. **3**), and the payment manager is responsible for invoking the appropriate payment handler **64** at the time of purchase.

Referring now to FIG. **7**, anytime a subscriber logs in to the download manager, a session **71** is created. The session **71** holds a reference to a unique subscriber profile **72** associated with the subscriber. Each subscriber has such a subscriber profile, which points to the organization that holds the billing relationship with the subscriber (i.e., the partner responsible for invoicing the subscriber) and an indication of the subscriber's selected payment model (i.e., post-paid, pre-paid, or online).

The download manager **1** also maintains a subscriber provider profile **73** for each subscriber provider (e.g., wireless carrier, etc.). Each subscriber provider profile **73** holds a reference to each of the payment handlers **64**, an indication of the local currency, and an indication of any value added tax and/or other charges that normally apply to the offered services in the region.

The product catalog **54**, as described above, holds the name, description and price of each product, as well as information indicating the supported devices. There is a separate entry for each supported local currency. There are no dependencies between the prices in various currencies for the same product.

This approach allows a product (or service) to have many different prices, on in each supported currency. There are no dependencies between prices other than that they all apply to

one product. This approach, therefore, supports localized pricing policies and local taxes, etc.

The payment manager **63** includes a set of rating handlers (not shown), which are responsible for adjusting the price of products based on various factors, such as promotional offers, applying rebates, etc. Prices of content may change from time to time, subject to factors such as rebates, promotions, etc. At the time of purchase, the price of the product is determined by invoking the rating handlers. Each rating handler is called by the payment manager **63** with a reference to the corresponding product license and a reference to the subscriber. The rating handler is responsible for adjusting the price, if appropriate, and returning a new price.

Each of the payment handlers includes a charge method. During purchase the charge method of the registered payment handler for the payment model selected by the subscriber is called. The argument to the charge method is a data structure, ChargeDetailRecord, generated by the payment manager **63**, which holds information about the subscriber, the product, the product license with the price, and the domain of the subscriber. The charge method can either approve the charge and, thus, allow the purchase, or it can deny the purchase.

Referring again to FIG. **3**, the domain manager **62** manages the associations between domains and partners, subscribers, suppliers, and products, and stores all of the domain information. As noted above, each domain can have the following properties:

- a name (localized)
- a description (localized)
- a uniform resource locator (URL) to a web site giving further description of the domain
- a contact address including contact person, contact telephone numbers, fax numbers and postal address
- the currency to use for billing and display purposes
- reference to handlers for online payment, pre-payment and post-payment
- a set of references to rating handlers

The domain manager **62** enables flexible business models to be implemented via revenue sharing between, and charging by, different stakeholders (partners).

Various aspects of the operation of the download manager **1** will now be described further with reference to FIGS. **8** through **13**. FIG. **8** illustrates a simplified process by which a product can be listed in the product catalog in a way that facilitates device-tailored product discovery and provisioning, according to an embodiment of the invention. Certain operations in the product workflow are not shown in FIG. **8** to facilitate explanation, such as content analysis and approval. Initially, at block **801** the download manager **1** receives inputs from a product supplier defining a product and one or more implementations of that product. At block **802**, the download manager receives inputs from the supplier specifying one or more devices (actual or generic) which support each implementation and one or more provisioning protocols to be used for each implementation. At block **803** the download manager **1** stores the product definition, the implementations, and a list of all of the supported devices and provisioning protocols. Finally, at block **804** the download manager **1** determines the set of all possible devices which support the product and stores this information in association with the product information in the product catalog **54**.

FIG. **9** shows a process by which the catalog is displayed to a subscriber, according to an embodiment of the invention. At block **901** a client device operated by the subscriber connects to the download manager **1**. The domain manager **62** then identifies the domain of the subscriber at bock **902** based on its stored domain and subscriber associations. At block **903**, the product manager **32** selects the language and currency to be used based on the domain of the subscriber (each domain has one language and currency). At block **904**, the device capability manager **37** identifies the client device (e.g., from the UserAgent or x-wap-profile header) and its corresponding set of static (well-known) device capabilities. When a request to view available products is received from the client device (block **905**), at block **906** the product manager **32** determines from the product catalog **54** which products are supported by the client device, based on the (static) capabilities of the client device. The download manager **1** then sends a response to the client at block **907**, to cause the client device to display product information relating to only those products supported by the client device, in the appropriate currency and language for the subscriber's domain.

FIG. **10** shows a process by which a purchase of a product can be made, according to an embodiment of the invention. After displaying the product catalog **54** to the subscriber, the download manager **1** receives the subscriber's selection of the product to purchase at block **1001**. At block **1002** the pricing manager **53** calls all of the registered rating adapters. The rating adapters then adjust the price of the selected product, if appropriate, at block **1003**. At block **1004** the pricing manager **53** then presents a license object indicating the price to the subscriber. If the subscriber confirms the purchase (block **1005**), then at block **1006** the provisioning manager requests the payment manager **63** to charge the applicable price for the product. The payment manager **63** responds at block **1007** by selecting the applicable payment handler **44** based on the domain to which the subscriber belongs and the subscriber's preferred payment model (prepaid, post-paid, or online). Finally, at block **1008** the selected payment handler **44** performs the charge method to complete the transaction.

Multiple Provisioning Models

Different client devices often require different content provisioning protocols and packaging formats. In order to make a given item of digital content available to multiple mobile devices supporting different provisioning models, a digital content supplier would normally have to deploy that item of content multiple times, packaging it differently for each of the provisioning models. The download manager **1**, however, separates content from how it is provisioned to a device. As described above and as illustrated conceptually in FIG. **11**, in the download manager **1** the product information is separated from the content itself, the content is separated from how it is packaged for delivery, the packaged content is separated from the delivery mechanism, and the delivery mechanism is separated from the discovery mechanism (the mechanism by which the subscriber discovers a product). By virtue of this separation, a content supplier is able to deploy content only once, targeting a wide range of devices, and the download manager **1** will deliver the content to those devices over a wide range of provisioning protocols.

When a product is submitted to the download manager **1** by a supplier, the supplier specifies which devices are supported by each implementation of the product. This information is then stored by the download manager **1** and used to select the proper packaging and provisioning protocol when the product is subsequently purchased.

The provisioning model used to provision a particular product in a particular client device is based on the device capabilities of the client device as well as the content type

of the best-fit implementation. A provisioning "model", in this context, includes a particular provisioning protocol and a content packaging format. The ability to deliver the "best-fit" content based on "active" (dynamic) capabilities of a device is advantageous. Content provisioning provides the second part of targeting products to a given subscriber based on his device's capabilities. Whereas product discovery as described above relies on the "static" capabilities, provisioning relies on the "active" capabilities to determine the exact and often new enhancements of the client device. Given that a device can be fitted or enhanced with new features not described by the default set of capabilities originally intended for the device, the download manager **1** can use these active capabilities to find the best match content to provision to the device.

FIG. **12** illustrates a process by which a product is provisioned in a client device using the appropriate one of various provisioning protocols. At block **1201**, in response to a subscriber purchasing a product, the delivery manager **31** selects the best implementation of the product based on the device capabilities (static and active) of the client device. At block **1202** the download manager retrieves the content type of the selected implementation (e.g., MIDlet, EXE file, applet, iAppli, etc.). At block **1203** the download manager **1** selects the appropriate provisioning model available for that implementation, based on the device capabilities of the client device and the content type of the selected implementation. The provisioning manager **28** then creates a content descriptor for the implementation at block **1204**, based on the selected provisioning model. The content descriptor specifies the name of the content to be provisioned, the size of the content, a location (e.g., a URL) at which the content is stored, and the content type of the content. The content descriptor is unique to the provisioning handler (protocol) of the selected provisioning model.

The provisioning manager **28** then downloads the content descriptor to the client device at block **1205**. The client device parses the descriptor and then requests the content. When the provisioning manager **28** receives the request for the content from the client device at block **1206**, the provisioning manager **28** responds at block **1207** by downloading the content using the provisioning protocol of the selected provisioning model (e.g., COD OTA, Openwave Download Fun, MIDP OTA, etc.)

Download Manager Deployment Architecture

FIG. **13** shows an example of the software deployment architecture of the download manager **1** at a high level, according to an embodiment of the invention. Each instance of the download manager **1** resides on a host **131** that has access to a database **140**. The host **131** is a server-class computer system including an operating system (e.g., Solaris). The database **140** may represent multiple physical databases, which in aggregate store all of the data used by the download manager **1** (i.e., product information, subscriber information, partner information, domain information, etc.). In the illustrated embodiment, each host **131** includes a Java Virtual Machine (JVM) **132** which runs on top of the operating system and which hosts an application server **133**. On top of the application server **133** is a Web container **134** that contains Java Server Pages (JSPs) **135** and servlets **136** as well as application components **137** including the business logic and data access layer **138** of the download manager **1**.

The download manager **1** is formed by the Web container **134** and its contents, the application components **137**, and at least a portion of the database **140**. Horizontal scaling can be achieved by adding more hosts**131** hosting instances of the download manager **1**. In that case, an Internet Protocol (IP) load balancer **139** provides sticky load balancing, i.e., directing all session-specific traffic to the same host.

The above-described software architecture (i.e., the download manager) can be implemented in one or more conventional server-class computer systems. FIG. **14** illustrates the hardware architecture of such a computer system at a high-level. Note that this architecture is also representative of at least some client devices that access the download manager **1**. Note also that FIG. **14** is a conceptual representation which represents any of numerous possible specific physical arrangements of hardware components; however, the details of such arrangements are not germane to the present invention and are well within the knowledge of those skilled in the art.

The processing system shown in FIG. **14** includes one or more processors **140**, i.e. a central processing unit (CPU), read-only memory (ROM) **141**, and random access memory (RAM) **142**, each connected to a bus system **146**. Also coupled to the bus system **146** are a mass storage device **143**, a data communication device **144**, and in some embodiments, one or more additional input/output (I/O) devices **145**.

The processor(s) **140** may be, or may include, one or more programmable general-purpose or special-purpose microprocessors or digital signal processors (DSPs), microcontrollers, application specific integrated circuits (ASICs), programmable logic devices (PLDs), or a combination of such devices. The bus system **146** includes one or more buses or other physical connections, which may be connected to each other through various bridges, bus controllers and/or adapters such as are well-known in the art. For example, the bus system **146** may include a "system bus", which may be connected through one or more adapters to one or more expansion buses, such as a Peripheral Component Interconnect (PCI) bus, HyperTransport or industry standard architecture (ISA) bus, small computer system interface (SCSI) bus, universal serial bus (USB), or Institute of Electrical and Electronics Engineers (IEEE) standard 1394 bus (sometimes referred to as "Firewire"). In alternative embodiments, some or all of the aforementioned components may be connected to each other directly, rather than through a bus system.

The mass storage device **143** may be, or may include, any one or more devices suitable for storing large volumes of data in a non-volatile manner, such as a magnetic disk or tape, magneto-optical (MO) storage device, or any of various types of Digital Versatile Disk (DVD) or Compact Disk (CD) based storage, or a combination of such devices.

The data communication device **144** is a device suitable for enabling the processing system to communicate data with a remote processing system over a data communication link **148**, and may be, for example, a conventional telephone modem, a wireless modem, an Integrated Services Digital Network (ISDN) adapter, a Digital Subscriber Line (DSL) modem, a cable modem, a radio transceiver, a satellite transceiver, an Ethernet adapter, or the like.

The I/O devices **145** (which may be omitted in a system that operates exclusively as a server and provides no direct local user interface) may include, for example, one or more devices such as: a pointing device such as a mouse, trackball, touchpad, or the like; a keyboard; audio speakers; and/or a display device such as a cathode ray tube (CRT), a liquid crystal display (LCD), or the like. Other variations upon the illustrated set of components can be implemented in a manner consistent with the invention.

Software (including instructions and data) **147** to implement the techniques described above may be stored in one or more of ROM **141**, RAM **142**, and mass storage device **143**. In certain embodiments, the software **147** may be initially loaded into the processing system by downloading it from a remote system through the communication device **144**.

Thus, a system and method for managing the publication, purchase and delivery of digital content from multiple content suppliers to multiple wireless services subscribers in multiple domains have been described. Although the present invention has been described with reference to specific exemplary embodiments, it will be recognized that the invention is not limited to the embodiments described, but can be practiced with modification and alteration within the spirit and scope of the appended claims. Accordingly, the specification and drawings are to be regarded in an illustrative sense rather than a restrictive sense.

What is claimed is:

1. A method of providing access to content for use on wireless communication devices, the method comprising:

receiving and storing a plurality of items of content to be made available for use in wireless communication devices used by a plurality of wireless services subscribers, including receiving a plurality of different implementations of at least one of the items of content, where each implementation of any given item of content corresponds to a different set of device capabilities; and

maintaining a product catalog containing a description of the items of content, the product catalog including, in association with each item of content, a reference to each implementation of said item of content.

2. A method of providing access to digital content for use on wireless communication devices, the method comprising:

receiving and storing in a server system a plurality of items of digital content to be made available for use in wireless communication devices used by a plurality of wireless services subscribers, including receiving and storing a plurality of different implementations of at least one of the items of digital content, where each implementation of any given item of digital content corresponds to a different set of device capabilities;

operating the server system to maintain a product catalog containing a description of the items of digital content, wherein the product catalog includes, in association with each item of digital content, a reference to each implementation of said item of digital content;

receiving a request from a wireless device used by one of the subscribers;

in response to the request, selecting a portion of the product catalog to be presented to the subscriber, based on device capabilities of the wireless device used by the subscriber; and

presenting the selected portion of the product catalog to the subscriber via a wireless network, such that the selected portion, as presented to the subscriber, provides only a single description of each item of digital content in said portion, regardless of the number of implementations of each said item.

3. A method as recited in claim **2**, wherein said selecting a portion of the product catalog comprises:

in response to the request, determining the identity of the wireless device used by the subscriber, wherein each implementation of the plurality of items of digital content has been previously associated in the server system with at least one device identity, according to corresponding device capabilities supported by the implementation; and

selecting the portion of the product catalog to be presented to the subscriber based on the identity of the wireless device used by the subscriber.

4. A method as recited in claim **2**, further comprising:

receiving from the subscriber a request for one of the items of digital content in said portion of the product catalog;

selecting an implementation of the requested item of digital content, based on device capabilities of the wireless device used by the subscriber; and

downloading the selected implementation of the item of digital content to the wireless device used by the subscriber.

5. A method as recited in claim **4**, further comprising associating each of the items of digital content in the server system with a plurality of different provisioning models, each of the provisioning models corresponding to a different set of device capabilities, each provisioning model including a provisioning protocol and a corresponding set of provisioning attributes and descriptors for provisioning digital content in wireless devices.

6. A method as recited in claim **5**, further comprising:

receiving from the subscriber a request for one of the items of digital content in said portion of the product catalog;

identifying device capabilities of the wireless device used by the subscriber;

selecting one of a plurality of provisioning models associated with the requested item in the server system, based on the device capabilities of the wireless device used by the subscriber;

packaging the requested item according to the selected provisioning model; and

provisioning the requested item in the wireless device used by the subscriber according to the selected provisioning model.

7. A method as recited in claim **6**, wherein:

said packaging the requested item comprises creating a provisioning descriptor for the requested item according to the selected provisioning model, and associating the provisioning descriptor with the requested item; and

said provisioning the requested item in the wireless device comprises sending the packaged requested item to the wireless device used by the subscriber according to a provisioning protocol associated with the selected provisioning model.

8. A system comprising:

a network interface through which to communicate over a communication network; and

a download manager to

receive and store a plurality of items of content to be made available for use in wireless communication devices used by a plurality of wireless telecommunications subscribers, including receiving a plurality of different implementations of at least one of the items of content, where each implementation of any given item of content corresponds to a different set of device capabilities; and

maintain a product catalog containing a description of the items of content, the product catalog including, in association with each item of content, a reference to each implementation of said item of content.

9. A system comprising:

a processor; and

a storage facility accessible to the processor and containing code which, when executed by the processor, causes the processing system to

receive and store a plurality of items of digital content to be made available for use in wireless communication devices used by a plurality of wireless telecommunications subscribers, including receiving and storing a plurality of different implementations of at least one of the items of digital content, where each implementation of any given item of digital content corresponds to a different set of device capabilities;

maintain a product catalog containing a description of the items of digital content, wherein the product catalog includes, in association with each item of digital content, a reference to each implementation of said item of digital content;

receive a request from a wireless device used by one of the subscribers;

in response to the request, select a portion of the product catalog to be presented to the subscriber, based on device capabilities of the wireless device used by the subscriber; and

cause the selected portion of the product catalog to be presented to the subscriber via a wireless telecommunications network, such that the selected portion, as presented to the subscriber, provides only a single description of each item of digital content in said portion, regardless of the number of implementations of each said item.

10. A system as recited in claim 9, wherein selection of said portion of the product catalog comprises:

in response to the request, determining the identity of the wireless device used by the subscriber, wherein each implementation of the plurality of items of digital content has been previously associated in the server system with at least one device identity, according to corresponding device capabilities supported by the implementation; and

selecting the portion of the product catalog to be presented to the subscriber based on the identity of the wireless device used by the subscriber.

11. A system as recited in claim 10, wherein said storage facility further contains code which, when executed by the processor, causes the processing system to:

receive from the subscriber a request for one of the items of digital content in said portion of the product catalog;

select an implementation of the requested item of digital content, based on device capabilities of the wireless device used by the subscriber; and

download the selected implementation of the item of digital content to the wireless device used by the subscriber.

12. A system as recited in claim 11, wherein said storage facility further contains code which, when executed by the processor, causes the processing system to:

associate each of the items of digital content in the server system with a plurality of different provisioning models, each of the provisioning models corresponding to a different set of device capabilities, each of the provisioning models including a provisioning protocol and a corresponding set of provisioning attributes and descriptors for provisioning digital content in wireless devices.

13. A system as recited in claim 12, wherein said storage facility further contains code which, when executed by the processor, causes the processing system to:

receive from the subscriber a request for one of the items of digital content in said portion of the product catalog;

identify device capabilities of the wireless device used by the subscriber;

select one of a plurality of provisioning models associated with the requested item in the server system, based on the device capabilities of the wireless device used by the subscriber;

package the requested item according to the selected provisioning model; and

provision the requested item in the wireless device used by the subscriber according to the selected provisioning model.

14. A system as recited in claim 13, wherein packaging the requested item comprises creating a provisioning descriptor for the requested item according to the selected provisioning model, and associating the provisioning descriptor with the requested item; and

wherein provisioning the requested item in the wireless device comprises sending the packaged requested item to the wireless device used by the subscriber according to a provisioning protocol associated with the selected provisioning model.

* * * * *