(12) INTERNATIONAL APPLICATION PUBLISHED UNDER THE PATENT COOPERATION TREATY (PCT)

(19) World Intellectual Property Organization
International Bureau

(43) International Publication Date
18 October 2012 (18.10.2012)

WIPO | PCT

(10) International Publication Number
WO 2012/140559 A1

(51) International Patent Classification:
A61B 5/024 (2006.01) *A61B 5/1455* (2006.01)
A61B 5/0404 (2006.01)

(21) International Application Number:
PCT/IB2012/051731

(22) International Filing Date:
8 April 2012 (08.04.2012)

(25) Filing Language: English

(26) Publication Language: English

(30) Priority Data:
61/473,821 11 April 2011 (11.04.2011) US

(71) Applicant *(for all designated States except US)*: **MEDIC4ALL AG** [CH/CH]; Aegeristrasse 27, 6300 Zug (CH).

(72) Inventors; and
(75) Inventors/Applicants *(for US only)*: **SHMUELI, Ram** [IL/IL]; 12 Nordau St., 47269 Ramat-Hasharon (IL). **SANDLERMAN, Nimrod** [IL/IL]; 44 Churgin St., 52346 Ramat-Gan (IL).

(74) Agent: **SWIRSKY, Daniel J.**; AlphaPatent Associates Ltd., 55 Reuven St., 99544 Beit Shemesh (IL).

(81) Designated States *(unless otherwise indicated, for every kind of national protection available)*: AE, AG, AL, AM, AO, AT, AU, AZ, BA, BB, BG, BH, BR, BW, BY, BZ, CA, CH, CL, CN, CO, CR, CU, CZ, DE, DK, DM, DO, DZ, EC, EE, EG, ES, FI, GB, GD, GE, GH, GM, GT, HN, HR, HU, ID, IL, IN, IS, JP, KE, KG, KM, KN, KP, KR, KZ, LA, LC, LK, LR, LS, LT, LU, LY, MA, MD, ME, MG, MK, MN, MW, MX, MY, MZ, NA, NG, NI, NO, NZ, OM, PE, PG, PH, PL, PT, QA, RO, RS, RU, RW, SC, SD, SE, SG, SK, SL, SM, ST, SV, SY, TH, TJ, TM, TN, TR, TT, TZ, UA, UG, US, UZ, VC, VN, ZA, ZM, ZW.

(84) Designated States *(unless otherwise indicated, for every kind of regional protection available)*: ARIPO (BW, GH, GM, KE, LR, LS, MW, MZ, NA, RW, SD, SL, SZ, TZ, UG, ZM, ZW), Eurasian (AM, AZ, BY, KG, KZ, MD, RU, TJ, TM), European (AL, AT, BE, BG, CH, CY, CZ, DE, DK, EE, ES, FI, FR, GB, GR, HR, HU, IE, IS, IT, LT, LU, LV, MC, MK, MT, NL, NO, PL, PT, RO, RS, SE, SI, SK, SM, TR), OAPI (BF, BJ, CF, CG, CI, CM, GA, GN, GQ, GW, ML, MR, NE, SN, TD, TG).

Published:
— *with international search report (Art. 21(3))*
— *before the expiration of the time limit for amending the claims and to be republished in the event of receipt of amendments (Rule 48.2(h))*

(54) Title: PULSE OXIMETRY MEASUREMENT TRIGGERING ECG MEASUREMENT

Fig. 7

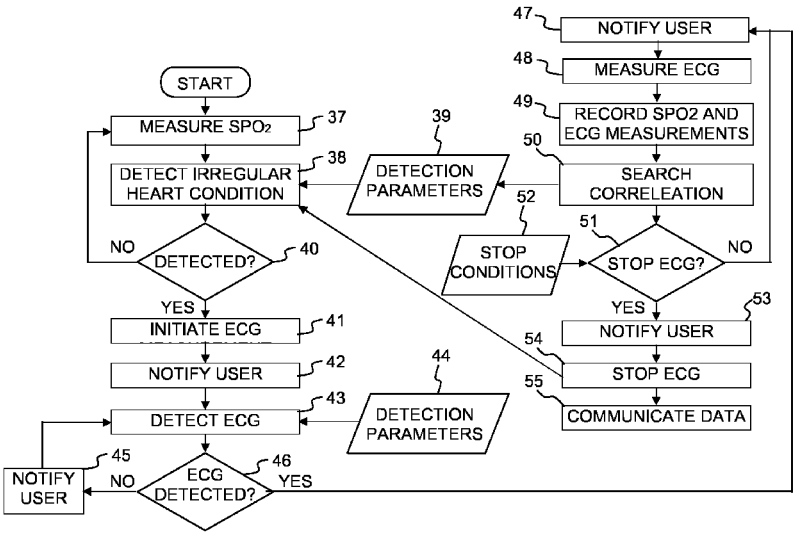

(57) Abstract: A method and a system for triggering the measurement of electrocardiogram (ECG) signal of a user. The system includes a SpO_2 measuring unit and an ECG measuring unit both embedded in a wrist-mounted device warren by the user. The method including the steps of: continuously measuring SpO_2 at the wrist of the user, detecting an irregular heart condition from the SpO_2 measurement, notifying the user to perform an ECG measurement, and initiating the ECG measurement at least partially at the wrist.

WO 2012/140559 A1

Masimo Ex. 1008
IPR Petition - USP 10,627,783

PULSE OXIMETRY MEASUREMENT TRIGGERING ECG MEASUREMENT

Cross-Reference to Related Applications

This application claims the priority benefit of U.S. Provisional Patent Application No. 61473821 filed April 11, 2011, which is incorporated herein by reference.

Field of the Invention

The present invention relates to systems and methods for patient monitoring and, more particularly but not exclusively, to systems and methods for monitoring heart-related events using electrocardiogram (ECG).

Background of the Invention

Various heart diseases require the monitoring of events associated with electrical activity of the heart. The electrical activity is typically monitored by measuring an electrocardiogram (ECG). Some heart diseases are reflected in permanent irregularities of the ECG signal. Other heart diseases are reflected in transient, very short-time, irregularities of the ECG signal. Some heart diseases are reflected in events of irregular ECG signal.

Measuring ECG typically requires connecting the patient to an ECG measuring device via a plurality of wires connected to the patient in predefined places of the body. If the heart-related event is short enough the patient does not have the time to find an ECG device, to properly wire the device to the body and then take the ECG measurement.

One common solution is a telemetry ECG device that is wired to the patient and transmits the ECG signal to a near-by telemetry station. Such devices are used in hospitals where it is important to monitor the patients at all time and also enable them mobility within the hospital ward. However, this solution has the disadvantage of the communication range of the ECG monitoring device.

Another common solution is a Holter device, which is practically a small ECG device connected to the patient for typically 24 hours, recording the ECG signal. Hopefully, the heart-related event occurs during the recording time. The Holter does not limit the mobility range of the patient but has a time limit of its operation. For events that

Masimo Ex. 1008
IPR Petition - USP 10,627,783

are not sufficiently frequent this solution does not work. Also important and highly disadvantageous is the Holter device uses electric contacts at the end of electric cables. Thus, the patient has to be constantly wired to the Holter device.

All such solutions require uncomfortable fixed wiring of the patient to the ECG device at all time. Solutions require uncomfortable fixed wiring are therefore inappropriate for monitoring infrequent events of irregular ECG. There is thus a widely recognized need for, and it would be highly advantageous to have, a method and a system for measuring the ECG signal associated with an intermittent irregular heart-related event, devoid of the above limitations.

The following patents and patent applications are believed to represent the most relevant prior art: US patents 5,176,137, 7,598,878, and 7650176; US patent applications 20020095092, 20030229276, 20070038050, 20090247848, and 20090326356; and PCT applications WO2001017420, and WO2009074985.

Summary of the Invention

According to one aspect of the present invention there is provided a method for triggering measurement of electrocardiogram (ECG) signal of a subject, the method including the steps of: continuously measuring SpO2 at least one of a wrist and a finger of the subject, detecting an irregular heart condition from the SpO2 measurement, notifying the subject to perform an ECG measurement, and initiating ECG measurement at least partially at the wrist.

According to another aspect of the present invention there is provided a method for triggering ECG measurement where the step of notifying the subject to perform an ECG measurement includes at least one of the acts of: notifying the subject to perform an ECG measurement repeatedly until the ECG measurement detects an ECG signal, stopping the notification to the subject to perform an ECG measurement when the ECG measurement detects an ECG signal, notifying the subject when the ECG signal is first detected, notifying the subject that the ECG signal is being detected, notifying the subject as long as the ECG signal is detected, and notifying the subject that the ECG measurement has stopped.

According to still another aspect of the present invention there is provided a method for triggering ECG measurement additionally including the steps of: performing

Masimo Ex. 1008
IPR Petition - USP 10,627,783

the SpO2 measurement while performing the ECG measurement, identifying a correlation between the SpO2 measurement and the ECG measurement, and using the correlation in the step of detecting an irregular heart condition from the SpO2 measurement.

Yet according to another aspect of the present invention there is provided a method for triggering ECG measurement where the correlation is particular to the subject.

Also according to another aspect of the present invention there is provided a method for triggering ECG measurement where the ECG measurement is stopped upon detecting at least one of the conditions of: the irregular heart condition stopped, heart condition returned to normal, a predefined period elapsed, and a predefined number of heart beats counted.

Further according to another aspect of the present invention there is provided a method for triggering ECG measurement where the SpO2 measurement includes using reflective SpO2 measurement.

Yet further according to another aspect of the present invention there is provided a method for triggering ECG measurement where the ECG measurement additionally includes the steps of: providing at least two separate conductive areas configured to measure electrical activity of the subject, performing at least one of the steps of: contacting a first conductive area to at least a portion of the wrist, and a second conductive area to a finger of a second hand of the subject, contacting a first conductive area to at least a portion of the wrist, and a second and a third conductive areas to two fingers of a second hand of the subject, and contacting a first and a second conductive areas to at least a portion of the first hand and a third conductive area to a second hand of the subject; extracting an ECG signal from the conductive areas by using one conductive area as a reference and amplifying the differential voltage between at least two other conductive areas; and continuously converting the at least one measurement to form medical information.

Still further according to another aspect of the present invention there is provided a method for triggering ECG measurement where the ECG measurement additionally includes the step of: communicating at least one of the SpO2 measurement, the ECG measurement, and the medical information to at least one of a gateway and a remote server.

Masimo Ex. 1008
IPR Petition - USP 10,627,783

According to yet another aspect of the present invention there is provided a wrist-mounted physiological parameters measuring device including: an SpO2 measuring unit attached to a wrist of a subject the SpO2 measuring unit being operative to continuously measure SpO2 at the wrist of the subject, an ECG measuring unit attached to the wrist of the subject for measuring ECG signal at least partially at the wrist, and a processor operative to control both the SpO2 measuring and the ECG measuring unit, where the processor is operative to detect an irregular heart condition from the SpO2 measurement, to notify the subject to perform an ECG measurement upon detecting the irregular heart condition the, and to initiate the ECG measurement.

According to still another aspect of the present invention there is provided a wrist-mounted physiological parameters measuring device where the processor is additionally configured to perform at least one of the procedures selected from the group including of: a procedure for notifying the subject to perform an ECG measurement repeatedly until the ECG measurement detects an ECG signal, a procedure for stopping the notification to the subject to perform an ECG measurement when the ECG measurement detects an ECG signal, a procedure for notifying the subject when the ECG signal is first detected, a procedure for notifying the subject that the ECG signal is being detected, a procedure for notifying the subject as long as the ECG signal is detected, and a procedure for notifying the subject that the ECG measurement has stopped.

Further according to another aspect of the present invention there is provided a wrist-mounted physiological parameters measuring device where the processor is additionally configured to perform at least one of the procedures selected from the group including of: a procedure performing the SpO2 measurement while performing the ECG measurement, a procedure for identifying a correlation between the SpO2 measurement and the ECG measurement, and a procedure for detecting the irregular heart condition from the SpO2 measurement using the correlation.

Still further according to another aspect of the present invention there is provided a wrist-mounted physiological parameters measuring device where the correlation is particular to the subject.

Yet further according to another aspect of the present invention there is provided a wrist-mounted physiological parameters measuring device where the processor is additionally configured to stop the ECG measurement upon detecting at least one of the

Masimo Ex. 1008
IPR Petition - USP 10,627,783

conditions of: the irregular heart condition stopped, heart condition returned to normal, a predefined period elapsed, and a predefined number of heart beats counted.

Even further according to another aspect of the present invention there is provided a wrist-mounted physiological parameters measuring device the SpO2 measuring unit includes reflective SpO2 measurement device.

Additionally according to another aspect of the present invention there is provided a wrist-mounted physiological parameters measuring device where the ECG measurement unit includes at least two separate conductive areas configured to measure electrical activity of the subject, where the at least three conductive areas arranged in one of the following configurations: a first conductive area configured to be in contact with at least a portion of the wrist, and second conductive area configured to be touched by a finger of a second hand of the subject, a first conductive area configured to be in contact with at least a portion of the wrist, and second and third conductive areas configured to be touched by two fingers of a second hand of the subject, and a first and a second conductive areas configured to be in contact with at least a portion of the first hand and a third conductive area configured to be touched by a second hand of the subject, where the ECG signal is extracted from the three conductive areas by using the signal of one conductive area as a reference and amplifying the differential voltage between the other two conductive areas, and where the processor is operative to continuously convert the ECG signal to form medical information.

Also according to yet another aspect of the present invention there is provided a wrist-mounted physiological parameters measuring device additionally including a communication unit operative to communicate at least one of the SpO2 measurement, the ECG measurement, and the medical information to at least one of a gateway and a remote server.

Unless otherwise defined, all technical and scientific terms used herein have the same meaning as commonly understood by one of ordinary skill in the art to which this invention belongs. The materials, methods, and examples provided herein are illustrative only and not intended to be limiting.

Implementation of the method and system of the present invention involves performing or completing certain selected tasks or steps manually, automatically, or a combination thereof. Moreover, according to actual instrumentation and equipment of

Masimo Ex. 1008
IPR Petition - USP 10,627,783

preferred embodiments of the method and system of the present invention, several selected steps could be implemented by hardware or by software on any operating system of any firmware or a combination thereof. For example, as hardware, selected steps of the invention could be implemented as a chip or a circuit. As software, selected steps of the invention could be implemented as a plurality of software instructions being executed by a computer using any suitable operating system. In any case, selected steps of the method and system of the invention could be described as being performed by a data processor, such as a computing platform for executing a plurality of instructions.

Brief Description of the Drawings

The invention is herein described, by way of example only, with reference to the accompanying drawings. With specific reference now to the drawings in detail, it is stressed that the particulars shown are by way of example and for purposes of illustrative discussion of the preferred embodiments of the present invention only, and are presented in order to provide what is believed to be the most useful and readily understood description of the principles and conceptual aspects of the invention. In this regard, no attempt is made to show structural details of the invention in more detail than is necessary for a fundamental understanding of the invention, the description taken with the drawings making apparent to those skilled in the art how the several forms of the invention may be embodied in practice.

In the drawings:

Fig. 1A is a simplified illustration of a front view of a wrist-mounted heart monitoring device with two ECG sensors in the front side and one in the back side;

Fig. 1B is a simplified illustration of a back view of a wrist-mounted heart monitoring device with two ECG sensors in the front side and one in the back side;

Fig. 2A is a simplified illustration of a front view of a wrist-mounted heart monitoring device with one ECG sensors in the front side and two in the back side;

Fig. 2B is a simplified illustration of a back view of a wrist-mounted heart monitoring device with one ECG sensors in the front side and two in the back side

Fig. 3 is a simplified illustration of the wrist-mounted heart monitoring device of Figs. 1A and 1B warn and used by a subject;

Masimo Ex. 1008
IPR Petition - USP 10,627,783

Fig. 4 is a simplified illustration of the wrist-mounted heart monitoring device of Figs. 2A and 2B warn and used by a subject;

Fig. 5 is a simplified illustration of the wrist-mounted heart monitoring device having a ring-mounted oximeter sensor warn and used by a subject;

Fig. 6 is a simplified block diagram of the heart monitoring device; and

Fig. 7 is a simplified flow chart of a software program preferably executed by the processor of the wrist-mounted heart monitoring device.

Detailed Description of the Invention

The principles and operation of a combined oximetry and electrocardiogram measuring system and a method according to the present invention may be better understood with reference to the drawings and accompanying description.

Before explaining at least one embodiment of the invention in detail, it is to be understood that the invention is not limited in its application to the details of construction and the arrangement of the components set forth in the following description or illustrated in the drawings. The invention is capable of other embodiments or of being practiced or carried out in various ways. In addition, it is to be understood that the phraseology and terminology employed herein is for the purpose of description and should not be regarded as limiting.

In this document, an element of a drawing that is not described within the scope of the drawing and is labeled with a numeral that has been described in a previous drawing has the same use and description as in the previous drawings. Similarly, an element that is identified in the text by a numeral that does not appear in the drawing described by the text has the same use and description as in the previous drawings where it was described.

In this document, unless otherwise specified, the terms "oxygen saturation in the blood", "blood oxygen saturation", “pulse oximeter”, oximetry, SpO_2, and photoplethysmography have the same meaning and may be used interchangeably, except for those places where a difference between such terms is described. Similarly, the terms ECG, EKG, electrocardiogram, and electrocardiograph have the same meaning and may be used interchangeably unless otherwise specified. Additionally, the terms user, subject and patient may refer to the same entity, unless otherwise stated.

Oximetry and ECG are well known techniques and there are various devices for measuring each. US patent 7650176 (Sarussi) teaches reflective measurement of Oxygen saturation in the blood. Sarussi describes a device mounted on the wrist of a human subject, or on an ankle of a baby with a reflective oximetry sensor mounted at the back side of the device and facing the skin of the subject. US patent application 20020095092 (Kondo) also teaches reflective oximetry at the wrist. Additionally, US patent application 20070038050 (Sarussi) teaches a wrist-worn measuring device with a finger-worn reflective oximetry sensor. PCT application WO2001017420 (Lindberg) teaches a further method of reflective oximetry. None of these teaches the use of ECG measurements with oximetry.

Deriving heart beat rate from oximetry, as well as other artifacts of the heart activity and blood flow, is also known in the art, as can be seen in US patent 5,176,137 (Ericson) and US patent applications 20030229276 (Sarussi) and 20090247848 (Baker).

US patent applications 20100268040 (Ben Oren) and 20090326356 (Kracker) discuss combination of oximetry and ECG measurements. Both documents assume that both the oximetry device and the ECG device are connected to the patient at all times. Thus a combined measurement is possible.

US patent No. 7,598,878 (Goldreich) describes a wrist mounted device equipped with an ECG measuring device and a SpO_2 measuring device. However, Goldreich does not teach interrelated measurements of ECG and SpO_2.

The prior art does not consider a requirement to enable a patient to perform ECG measurement as soon as an irregular heart activity develops and without requiring the ECG to be constantly wired to the patient.

The present invention resolves this problem by providing a combined oximetry and electrocardiogram measuring system and a method in which the oximetry measurement is performed continuously and/or repeatedly, and the ECG measurement is triggered upon detection of an intermittent irregular heart-related event. The present invention preferably performs measurements of intermittent irregular heart-related events without requiring the fixed wiring of the ECG device to the patient.

Reference is now made to Figs. 1A and 1B, which are simplified illustrations of two views of a wrist-mounted heart monitoring device 10 according to a preferred embodiment of the present invention.

As shown in Fig. 1A, the heart monitoring device 10 preferably includes a monitoring unit 11 and a wearing accoutrement 12 such as a band, a strap or a bracelet, for attaching the monitoring unit 11 to a wrist of the monitored subject. It is appreciated that the accoutrement 12 can be a flexible band or a band equipped with a fastening article such as a hook and loop fastener (Velcro^{TM}) strip or any other type of fastener. It is appreciated that the heart monitoring device 10 can be attached to other parts of the body such as the ankle.

As shown in Figs. 1A and 1B, the heart monitoring device 10 is preferably equipped with two types of sensing devices: and oximetry (SpO_2) measuring unit and an ECG measuring unit. The oximetry measuring unit preferably includes an oximetry sensor 13 mounted in the back side of the monitoring unit 11 and facing the skin of the subject. The ECG measuring unit preferably includes at least three areas 14, each providing electrical contact with the subject. As shown in Figs. 1A and 1B, at least one of the electrical contacts 14 designated by the numeral 15 is mounted in the back side of the monitoring unit 11 and facing the skin of the subject, and at least two electrical contacts 14 designated by the numeral 16 are mounted on the front side of the monitoring unit 11.

It is appreciated that instead of, or in addition to, the oximetry (SpO_2) measuring unit the heart monitoring device may include a unit for measuring CO_2 content in the blood.

It is further appreciated that the oximetry (SpO_2) measuring unit can be mounted on the inner side of a ring or a clip worn on a finger of the hand wearing the heart monitoring device 10.

It is further appreciated that it is possible to measure ECG signals with only two electrical sensors contacting the subject, for example, one contact touching the wrist and the other contact touched by a finger of the other hand.

As shown in Figs. 1A, the heart monitoring device 10 may optionally include a user interface, preferably containing a display 17 and one or more buttons 18 for operating the device, and a sound producing device 19 for providing audible alerts to the user.

Reference is now made to Figs. 2A and 2B, which are simplified illustrations of two views of a different version wrist-mounted heart monitoring device 20 of an alternative configuration according to a preferred embodiment of the present invention.

Masimo Ex. 1008
IPR Petition - USP 10,627,783

As shown in Figs. 2A and 2B, a monitoring unit 21 of the heart monitoring device 20 is similar to the monitoring unit 11 except that it preferably contains one ECG sensing contact 14 designated by the numeral 22 mounted in the front side and two ECG sensing contact 14 designated by the numeral 23 mounted in the back side.

Reference is now made to Figs. 3 and 4, which are simplified illustrations of the wrist-mounted heart monitoring device warn and used by a subject according to a preferred embodiment of the present invention.

As shown in Fig. 3, the heart monitoring device 10 is preferably warren on the wrist of the first hand of the subject. The oximetry sensor 13 (not shown) preferably faces the front side of the hand. One electrical contact (not shown) mounted on the back side of the heart monitoring device 10 touches the skin of the subject at the wrist, and two of the fingers of the second hand of the subject touch the two electrical contacts 14 on the front side of the heart monitoring device 10.

Alternatively, the heart monitoring device 10 may be equipped with two electrical contacts, one electrical contact mounted in the back side of the heart monitoring device 10 facing the wrist and touching the skin of the wrist, and the other electrical contact mounted in the front side of the heart monitoring device 10 to be touched by a finger of the opposite hand.

As shown in Fig. 4, the heart monitoring device 20 is preferably warren on the wrist of the first hand of the subject. The oximetry sensor 13 (not shown) preferably faces the back side of the hand. Two electrical contacts (not shown) mounted on the back side of the heart monitoring device 10 touch the skin of the subject at the wrist, and one of the fingers of the second hand of the subject touches the electrical contact 14 on the front side of the heart monitoring device 10.

It is appreciated that the heart monitoring device 20 can be warren facing the front side of the hand and the heart monitoring device 10 can be warren facing the back side of the hand.

Reference is now made to Fig. 5, which is a simplified illustrations another version of the wrist-mounted heart monitoring device warn and used by a subject according to a preferred embodiment of the present invention.

As seen, the wrist-mounted heart monitoring device 24 of Fig. 5 includes the oximeter (not shown) mounted inside a ring 25 warn on a finger of the hand wearing the

Masimo Ex. 1008
IPR Petition - USP 10,627,783

heart monitoring device 24. The oximeter in the ring 24 is preferably connected to the heart monitoring device 24, preferably by an electrical cable 26.

Independently, the wrist-mounted heart monitoring device 24 includes a single electrical contact (not shown) mounted in the back side and a second electrical contact 14 mounted in the front side of the heart monitoring device 24 and touched by a finger of the other hand.

Reference is now made to Fig. 6, which is a simplified block diagram of the heart monitoring device 10, and/or 20 and/or 24, according to a preferred embodiment of the present invention.

As shown in Fig. 6, the heart monitoring device preferably includes a power supply unit such as a battery 27, a memory unit 28, a processor 29, an oximetry measuring unit 30 with the oximetry sensor 13, an ECG measuring unit 31 with three ECG contact sensors 14, a user interface unit 32 preferably containing output devices such as a display 33 and a sound producing device 34, and a user input device 35 for example including buttons, and optionally a communication unit 36.

The oximetry measuring unit 30 preferably uses reflective oximetry measuring technology. However, it is appreciated that other technologies for measuring SpO_2 such as transmittance oximetry can be used as well.

The memory unit 28 preferably contains software program containing instructions to be executed by the processor 29, operational parameters, oximetry and ECG data collected from the oximetry measuring unit 30 and ECG measuring unit 31, etc.

The software program contained in the memory unit 28 preferably contains various procedures such as:

Procedures for operating the oximetry measuring unit 30 and ECG measuring unit 31 including procedures to continuously measure SpO_2 signal, and procedures to initiate ECG measurements.

Procedures for operating the user-interface unit 32 and for interacting with the user including procedures for notifying the subject to perform an ECG measurement.

Procedures for analyzing oximetry measurements to detect various irregular heart conditions, procedure for identifying correlations between SpO_2 measurement and ECG measurement of a particular subject to detect user-specific irregular heart conditions.

Using said correlation in said step of detecting an irregular heart condition from said SpO_2 measurement.

Procedures for communicating with a gateway and/or a remote server for exchanging information such as operational parameters and/or SpO_2 and ECG measurements.

Reference is now made to Fig. 7, which is a simplified flow chart of a software program preferably executed by the processor 29 of the wrist-mounted heart monitoring device according to a preferred embodiment of the present invention.

As shown in Fig. 7, the software program starts in element 37 by measuring SpO_2. The element of measuring SpO_2 (e.g. oxygen saturation in the blood). The SpO_2 measurement is preferably executed continuously as long as the heart monitoring device is operative. Preferably, the SpO_2 measurement is executed using the oximetry measuring unit 30 and the oximetry sensor 13.

The software program proceeds to element 38 to derive from the SpO_2 measurement physiological parameters such as pulse rate, pulse amplitude, pulse shape, rate of blood flow, etc. Then, the software program scans the derived physiological parameters to detect various irregularities of the heart condition. The scanning for an irregular heart condition preferably uses heart-irregularity detection parameters (element 39) stored in the memory unit 28. When an irregular heart condition is detected (element 40) the software program continues to element 41. However, the SpO_2 measurement (element 37) preferably continues and optionally also the derivation of physiological parameters as well as the detection of irregular heart conditions (element 38).

In element 41 the software program preferably initiates ECG measurement, preferably by operating ECG measuring unit 31. The software program preferably proceeds to element 42 to notify the user to perform an ECG measurement, preferably making use of the ECG monitoring device as described and illustrated with reference to Figs. 3 and 4. The software program preferably proceeds to element 43 to detect and ECG signal. Preferably, determining that the ECG signal is present and appropriately detected by the ECG measuring unit 31 is made using ECG detection parameters (element 44) stored in the memory unit 28. The user is preferably notified (element 45) until an ECG signal is properly detected (element 46), in which case the software program proceeds to element 47 to notify the user that the ECG signal is detected.

Masimo Ex. 1008
IPR Petition - USP 10,627,783

The user notification features described with reference to elements 42, 45 and 47 includes the following optional but preferable notifications:

Repeatedly notifying the user to perform an ECG measurement until the ECG measurement detects an ECG signal.

Stopping the notification (to perform the ECG measurement) when the ECG measurement detects an ECG signal.

Notifying the user when the ECG signal is first detected.

Notifying the user that the ECG signal is being detected.

Notifying the user as long as the ECG signal is detected.

Then, the software program proceeds to element 48 to perform the ECG measurement and to element 49 to record the SpO_2 and the ECG measurements and preferably store them in the memory unit 28. Preferably, the SpO_2 and the ECG signals are correlated and stamped with a time stamp. The SpO_2 measurement, the ECG measurement and their recordation and storage (elements 37, 47 and 49 respectively) are continued and performed in parallel until a stopping condition is met.

Optionally but preferably the software program proceeds to element 50 to search for correlations between the SpO_2 signal and the ECG signal to produce new detection parameters, or modify existing detection parameters, so as to enhance the detection algorithms of the irregular heart conditions. Searching for correlation (element 50) can be executed in real-time (together with elements 37, 47 and 49) or later after the ECG measurement is concluded.

When the software program detects that a condition for stopping the ECG measurement is met (element 51) using stop conditions (element 52) preferably stored in the memory unit 28 the software program preferably notifies the user that the ECG measurement has stopped (element 53) and stops the ECG measurement (element 54).

Exemplary but preferable conditions for stopping the ECG measurement are:

The irregular heart condition has stopped.

The heart condition returned to normal.

A predefined period elapsed.

A predefined number of heart beats were counted.

Masimo Ex. 1008
IPR Petition - USP 10,627,783

The ECG measurement is preferably performed while performing the SpO_2 measurement (and vice-versa) and until it is stopped upon detecting at least one of the stopping conditions.

The notifications to the user, such as the various notifications to start the ECG measurement (element 42), notifications of ongoing ECG measurement (element 47), and notification that the ECG measurement has stopped (element 53) may be visual and/or audible, and/or graphic, and/or textual, and/or using sound, and/or using speech, and/or using vibration, etc.

After concluding the ECG measurement (element 54) the software program preferably proceeds to element 55 to communicate with a remote server. In this step of the software program the wrist-mounted heart monitoring device preferably transmits to the remote server the collected data, such as the recorded ECG measurement, and/or the recorded concurrent SpO_2 measurement, and/or relevant parameters such as those used to detect the irregular heart condition and to stop the measurement, as well as identification of the subject and/or the wrist-mounted heart monitoring device.

The communication with the remote server may use any type of a variety of communication technologies such as wireline, wireless, cellular, WAN, LAN, PAN, or their combinations.

Alternatively, the wrist-mounted heart monitoring device may communicate with a gateway, such as a mobile gateway, such as a cellular telephone, that relays the data from the wrist-mounted heart monitoring device to the remote server.

The remote server preferably further analyzes the data and distributes it and/or derived medical information to physicians, paramedics, or any other healthcare specialists. This communication procedures may also enable the software program to receive from the remote server (optionally via the gateway) software updates and operational parameters updates, such as new detection algorithms, modified detection parameters, modified conditions for stopping the ECG measurements, etc.

Alternatively, the wrist-mounted heart monitoring device may communicate with the remote server (optionally via the gateway) in real-time, while the ECG and SpO_2 measurements are performed. Such online, real-time or near-real-time communication with the remote server may enable the software program to receive parameters updates while

Masimo Ex. 1008
IPR Petition - USP 10,627,783

the measurements are performed, such as modifications to the conditions for stopping the ECG measurements.

It is expected that during the life of this patent many relevant methods and systems will be developed and the scope of the terms herein, particularly of the term "irregular heart condition" are intended to include all such new technologies a priori.

It is appreciated that certain features of the invention, which are, for clarity, described in the context of separate embodiments, may also be provided in combination in a single embodiment. Conversely, various features of the invention, which are, for brevity, described in the context of a single embodiment, may also be provided separately or in any suitable sub-combination.

Although the invention has been described in conjunction with specific embodiments thereof, it is evident that many alternatives, modifications and variations will be apparent to those skilled in the art. Accordingly, it is intended to embrace all such alternatives, modifications and variations that fall within the spirit and broad scope of the appended claims. All publications, patents and patent applications mentioned in this specification are herein incorporated in their entirety by reference into the specification, to the same extent as if each individual publication, patent or patent application was specifically and individually indicated to be incorporated herein by reference. In addition, citation or identification of any reference in this application shall not be construed as an admission that such reference is available as prior art to the present invention.

Claims

What is claimed is:

1. A method for triggering measurement of electrocardiogram (ECG) signal of a subject, the method comprising the steps of:

continuously measuring SpO_2 at least one of a wrist and a finger of said subject;

detecting an irregular heart condition from said SpO_2 measurement;

notifying said subject to perform an ECG measurement; and

initiating ECG measurement at least partially at said wrist.

2. The method according to claim 1 wherein said step of notifying said subject to perform an ECG measurement comprises at least one of the acts of:

notifying said subject to perform an ECG measurement repeatedly until said ECG measurement detects an ECG signal;

stopping said notification to said subject to perform an ECG measurement when said ECG measurement detects an ECG signal;

notifying said subject when said ECG signal is first detected;

notifying said subject that said ECG signal is being detected;

notifying said subject as long as said ECG signal is detected; and

notifying said subject that said ECG measurement has stopped.

3. The method according to claim 1 additionally comprising the steps of:

performing said SpO_2 measurement while performing said ECG measurement;

identifying a correlation between said SpO_2 measurement and said ECG measurement; and

using said correlation in said step of detecting an irregular heart condition from said SpO_2 measurement.

4. The method according to claim 3 wherein said correlation is particular to said subject.

Masimo Ex. 1008
IPR Petition - USP 10,627,783

5. The method according to claim 1 wherein said ECG measurement is stopped upon detecting at least one of the conditions of:

said irregular heart condition stopped;

heart condition returned to normal;

a predefined period elapsed; and

a predefined number of heart beats counted.

6. The method according to claim 1 wherein said SpO_2 measurement comprises using reflective SpO_2 measurement.

7. The method according to claim 1 wherein said ECG measurement additionally comprises the steps of:

providing at least two separate conductive areas configured to measure electrical activity of said subject;

performing at least one of the steps of:

(i) contacting a first conductive area to at least a portion of said wrist, and a second conductive area to a finger of a second hand of the subject;

(ii) contacting a first conductive area to at least a portion of said wrist, and a second and a third conductive areas to two fingers of a second hand of the subject; and

(iii) contacting a first and a second conductive areas to at least a portion of the first hand and a third conductive area to a second hand of said subject.

extracting an ECG signal from said conductive areas by using one conductive area as a reference and amplifying the differential voltage between at least two other conductive areas; and

continuously converting the at least one measurement to form medical information.

8. The method according to any of claims 1 to 7 wherein said ECG measurement additionally comprises the step of:

communicating at least one of said SpO_2 measurement, said ECG measurement, and said medical information to at least one of a gateway and a remote server.

9. A wrist-mounted physiological parameters measuring device comprising of:

Masimo Ex. 1008
IPR Petition - USP 10,627,783

an SpO_2 measuring unit attached to a wrist of a subject said SpO_2 measuring unit being operative to continuously measure SpO_2 at said wrist of said subject;

an ECG measuring unit attached to said wrist of said subject for measuring ECG signal at least partially at said wrist; and

a processor operative to control both said SpO_2 measuring and said ECG measuring unit;

wherein said processor is operative to detect an irregular heart condition from said SpO_2 measurement, to notify said subject to perform an ECG measurement upon detecting said irregular heart condition said, and to initiate said ECG measurement.

10. The device according to claim 9 wherein said processor is additionally configured to perform at least one of the procedures selected from the group comprising of:

a procedure for notifying said subject to perform an ECG measurement repeatedly until said ECG measurement detects an ECG signal;

a procedure for stopping said notification to said subject to perform an ECG measurement when said ECG measurement detects an ECG signal;

a procedure for notifying said subject when said ECG signal is first detected;

a procedure for notifying said subject that said ECG signal is being detected;

a procedure for notifying said subject as long as said ECG signal is detected; and

a procedure for notifying said subject that said ECG measurement has stopped.

11. The device according to claim 9 wherein said processor is additionally configured to perform at least one of the procedures selected from the group comprising of:

a procedure performing said SpO_2 measurement while performing said ECG measurement;

a procedure for identifying a correlation between said SpO_2 measurement and said ECG measurement; and

a procedure for detecting said irregular heart condition from said SpO_2 measurement using said correlation.

12. The device according to claim 9 wherein said correlation is particular to said subject.

Masimo Ex. 1008
IPR Petition - USP 10,627,783

13. The device according to claim 9 wherein said processor is additionally configured to stop said ECG measurement upon detecting at least one of the conditions of:

said irregular heart condition stopped;

heart condition returned to normal;

a predefined period elapsed; and

a predefined number of heart beats counted.

14. The device according to claim 9 wherein said SpO_2 measuring unit comprises reflective SpO_2 measurement device.

15. The device according to claim 9 wherein said ECG measurement unit comprises at least two separate conductive areas configured to measure electrical activity of said subject;

wherein said at least three conductive areas arranged in one of the following configurations:

(i) a first conductive area configured to be in contact with at least a portion of the wrist, and second conductive area configured to be touched by a finger of a second hand of the subject;

(ii) a first conductive area configured to be in contact with at least a portion of the wrist, and second and third conductive areas configured to be touched by two fingers of a second hand of the subject; and

(iii) a first and a second conductive areas configured to be in contact with at least a portion of the first hand and a third conductive area configured to be touched by a second hand of the subject;

whereby said ECG signal is extracted from said three conductive areas by using the signal of one conductive area as a reference and amplifying the differential voltage between the other two conductive areas; and

whereby said processor is operative to continuously convert said ECG signal to form medical information.

Masimo Ex. 1008
IPR Petition - USP 10,627,783

16. The device according to any of claims 9 to 15 additionally comprising a communication unit operative to communicate at least one of said SpO_2 measurement, said ECG measurement, and said medical information to at least one of a gateway and a remote server.

Masimo Ex. 1008
IPR Petition - USP 10,627,783

Fig. 1A

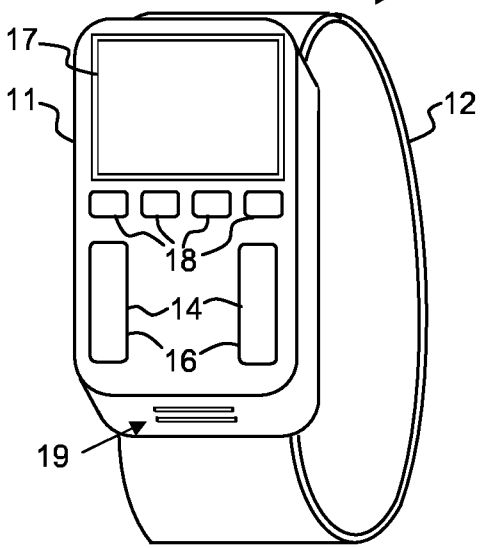

Fig. 1B

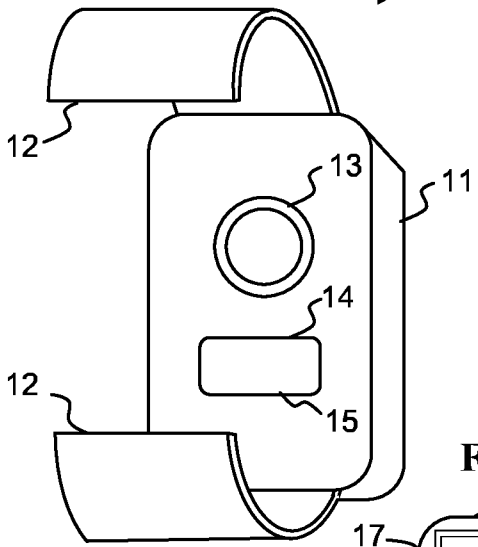

Fig. 2A

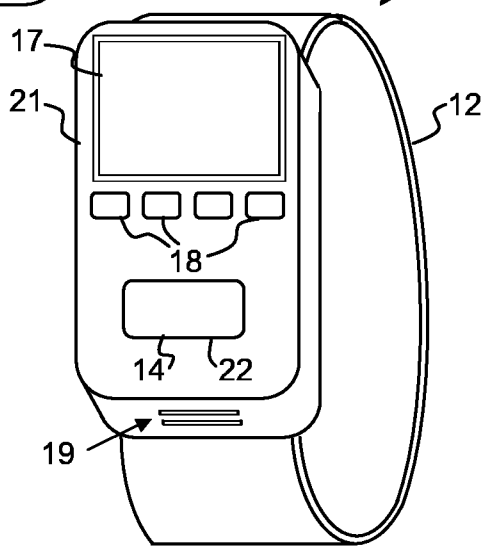

Fig. 2B

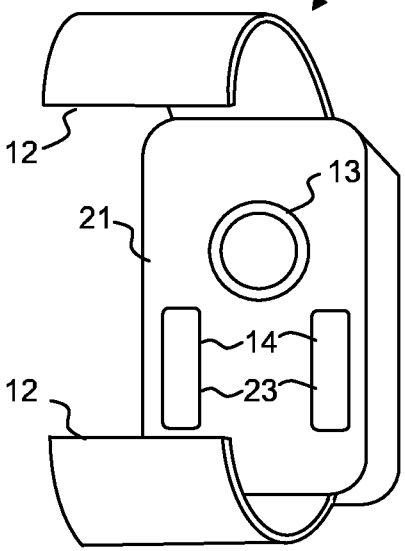

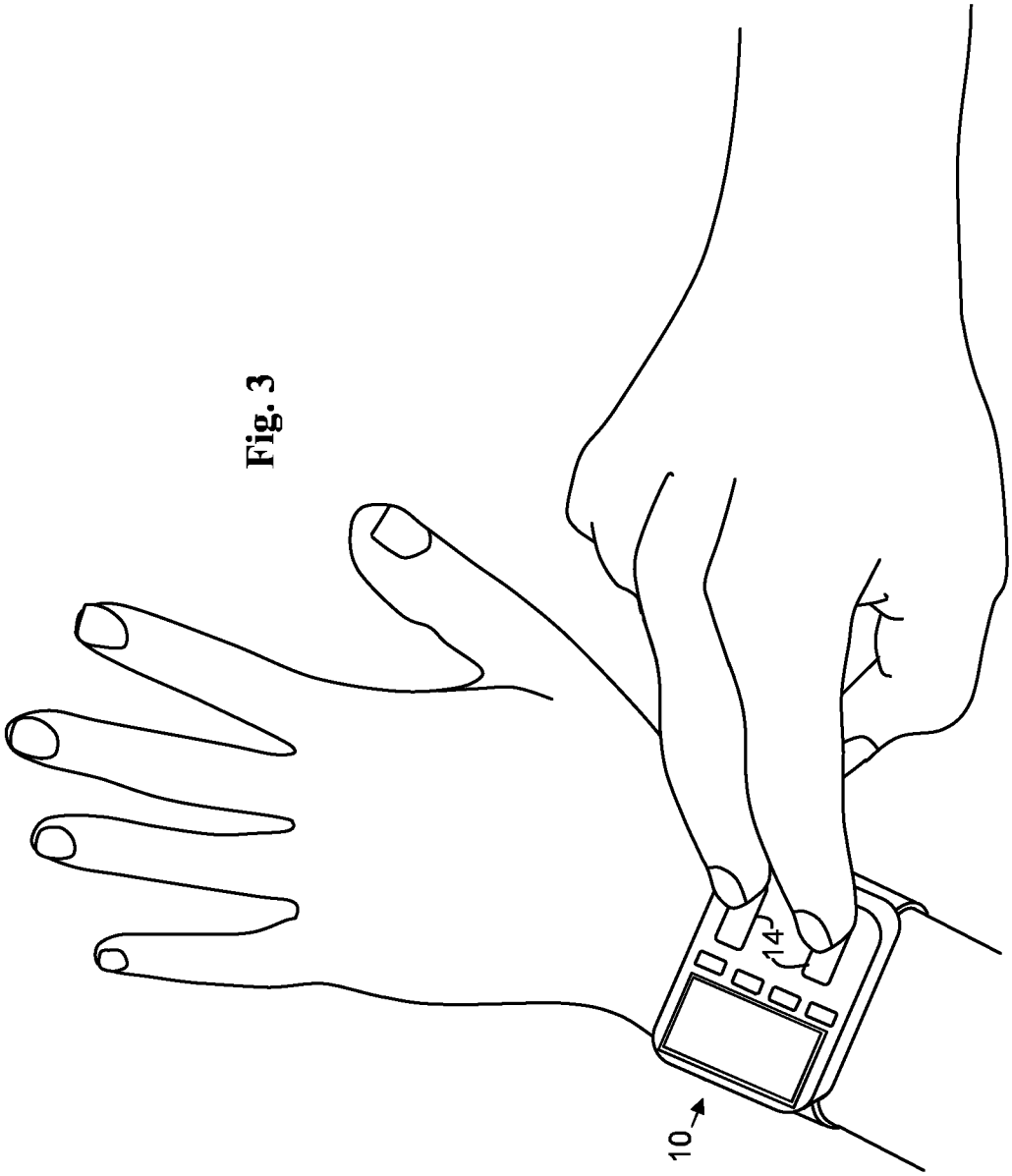

Fig. 3

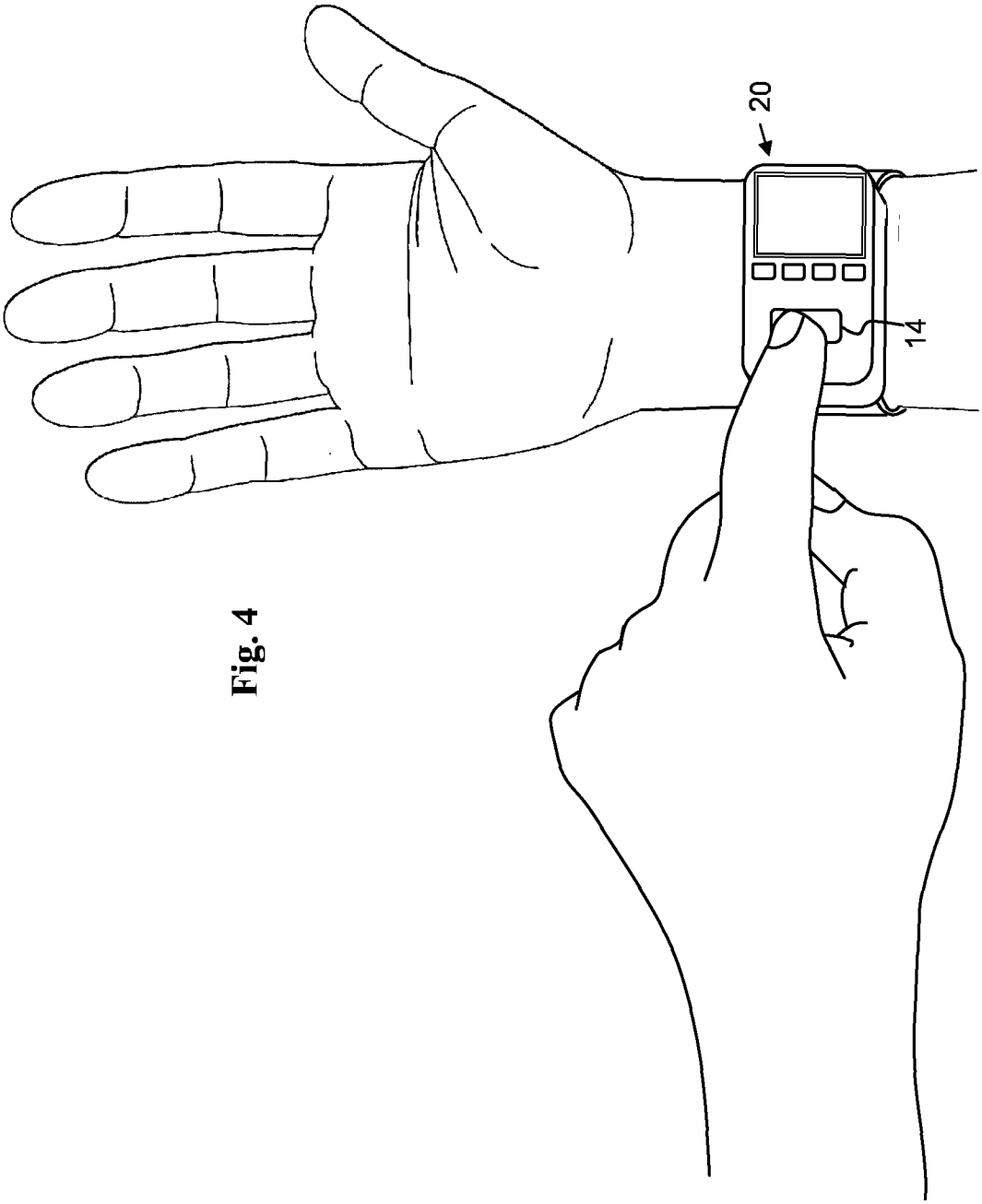

Fig. 4

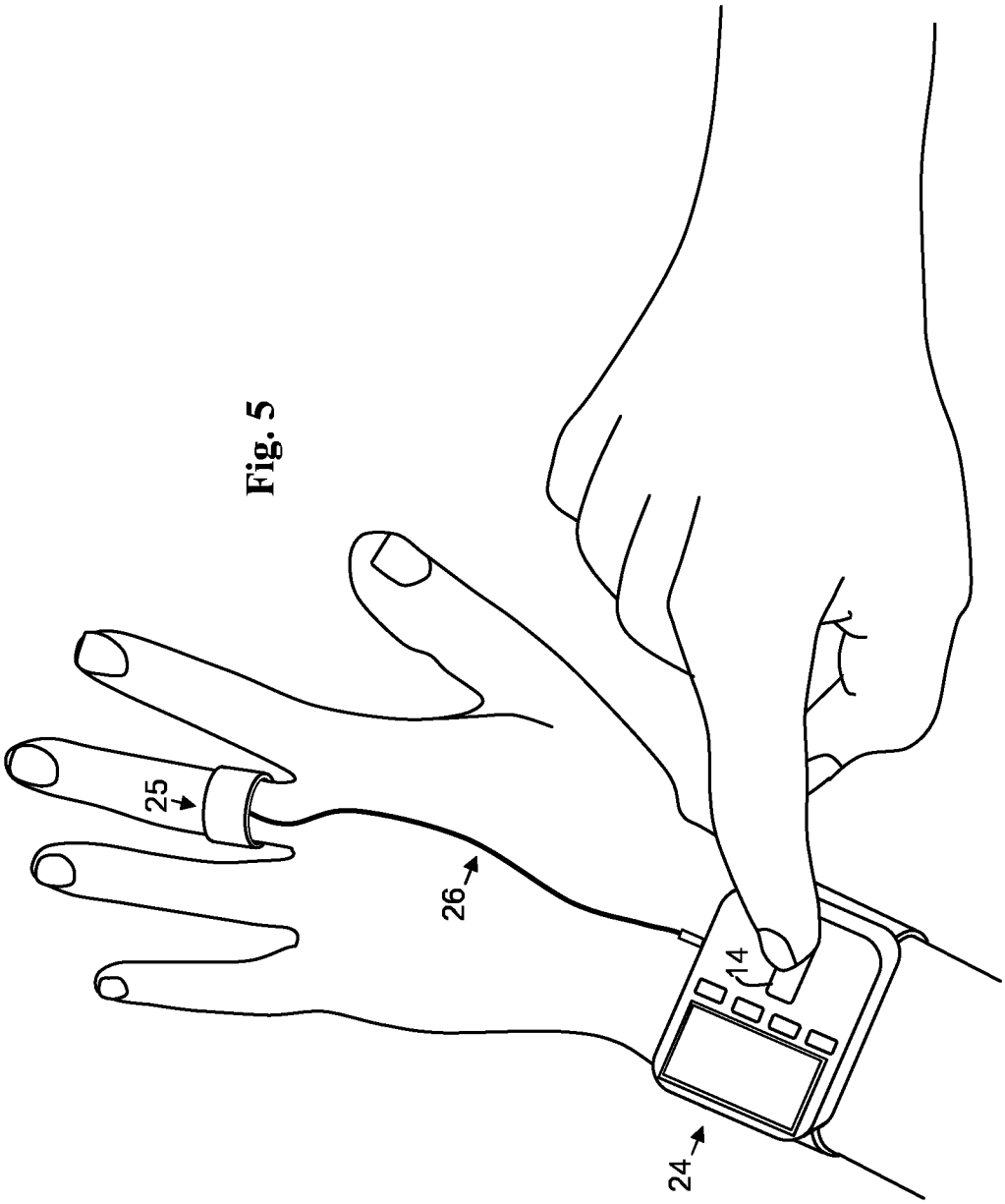

Fig. 5

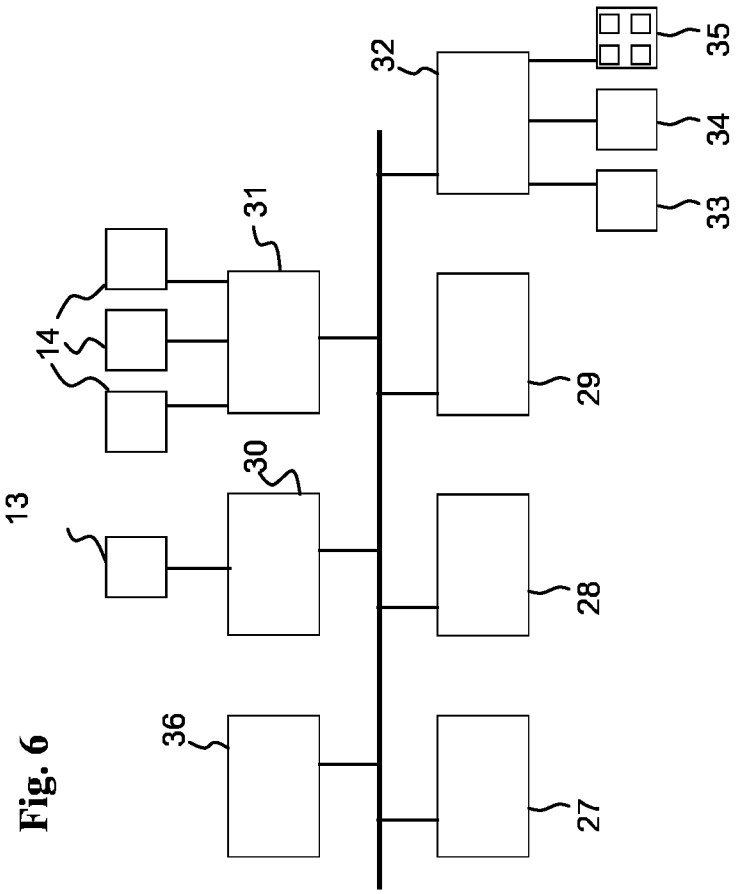

Fig. 6

Fig. 7

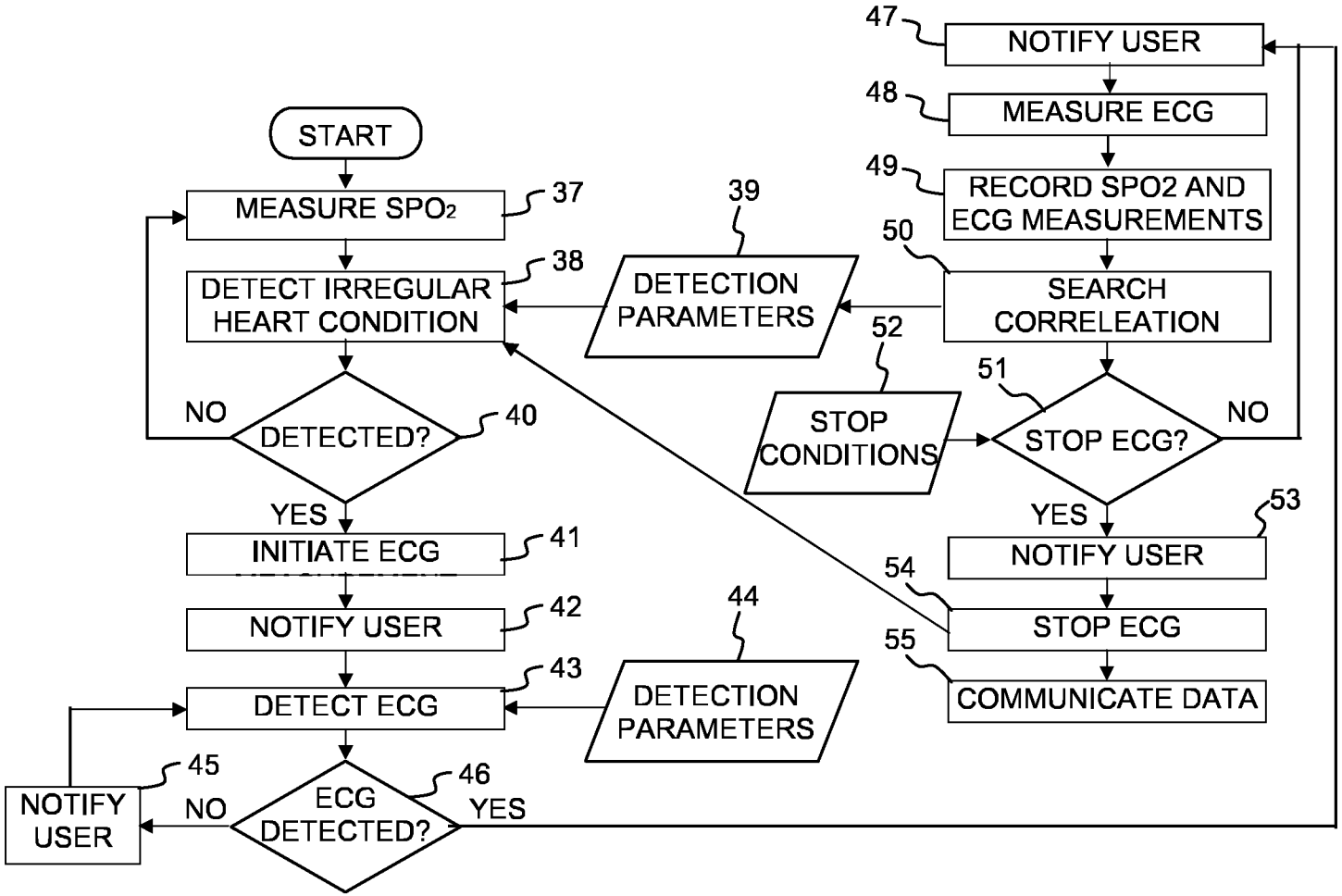

Masimo Ex. 1008
IPR Petition - USP 10,627,783

INTERNATIONAL SEARCH REPORT

International application No
PCT/IB2012/051731

A. CLASSIFICATION OF SUBJECT MATTER
INV. A61B5/024 A61B5/0404 A61B5/1455
ADD.

According to International Patent Classification (IPC) or to both national classification and IPC

B. FIELDS SEARCHED

Minimum documentation searched (classification system followed by classification symbols)
A61B

Documentation searched other than minimum documentation to the extent that such documents are included in the fields searched

Electronic data base consulted during the international search (name of data base and, where practicable, search terms used)

EPO-Internal, WPI Data

C. DOCUMENTS CONSIDERED TO BE RELEVANT

Category*	Citation of document, with indication, where appropriate, of the relevant passages	Relevant to claim No.
X	US 2007/265533 A1 (TRAN BAO [US]) 15 November 2007 (2007-11-15) figure 6A paragraphs [0218] - [0220], [0226] - [0229], [0245] - [0246], [0252] -----	9-16
X	US 2005/177051 A1 (ALMEN ADAM J [US]) 11 August 2005 (2005-08-11) abstract figures 1,2 paragraphs [0062] - [0064], [0072] - [0073], [0081] -----	9-16

-/--

[X] Further documents are listed in the continuation of Box C.

[X] See patent family annex.

* Special categories of cited documents :

"A" document defining the general state of the art which is not considered to be of particular relevance

"E" earlier application or patent but published on or after the international filing date

"L" document which may throw doubts on priority claim(s) or which is cited to establish the publication date of another citation or other special reason (as specified)

"O" document referring to an oral disclosure, use, exhibition or other means

"P" document published prior to the international filing date but later than the priority date claimed

"T" later document published after the international filing date or priority date and not in conflict with the application but cited to understand the principle or theory underlying the invention

"X" document of particular relevance; the claimed invention cannot be considered novel or cannot be considered to involve an inventive step when the document is taken alone

"Y" document of particular relevance; the claimed invention cannot be considered to involve an inventive step when the document is combined with one or more other such documents, such combination being obvious to a person skilled in the art

"&" document member of the same patent family

Date of the actual completion of the international search	Date of mailing of the international search report
2 August 2012	13/08/2012

Name and mailing address of the ISA/	Authorized officer
European Patent Office, P.B. 5818 Patentlaan 2 NL - 2280 HV Rijswijk Tel. (+31-70) 340-2040, Fax: (+31-70) 340-3016	Vanderperren, Yves

Form PCT/ISA/210 (second sheet) (April 2005)

Masimo Ex. 1008
IPR Petition - USP 10,627,783

INTERNATIONAL SEARCH REPORT

International application No
PCT/IB2012/051731

C(Continuation). DOCUMENTS CONSIDERED TO BE RELEVANT

Category*	Citation of document, with indication, where appropriate, of the relevant passages	Relevant to claim No.
X	WO 2005/110238 A1 (MEDIC4ALL A G [CH]; GOLDREICH RAMI [IL]) 24 November 2005 (2005-11-24) figures 1,5 page 32, line 3 - line 20 page 33, line 9 - line 18 -----	9-16
A	EP 0 335 357 A2 (NELLCOR INC [US]) 4 October 1989 (1989-10-04) paragraphs [0021], [0022] -----	11,12

Form PCT/ISA/210 (continuation of second sheet) (April 2005)

INTERNATIONAL SEARCH REPORT

International application No.
PCT/IB2012/051731

Box No. II Observations where certain claims were found unsearchable (Continuation of item 2 of first sheet)

This international search report has not been established in respect of certain claims under Article 17(2)(a) for the following reasons:

1. [X] Claims Nos.: 1-8
because they relate to subject matter not required to be searched by this Authority, namely:

see FURTHER INFORMATION sheet PCT/ISA/210

2. [ ] Claims Nos.:
because they relate to parts of the international application that do not comply with the prescribed requirements to such an extent that no meaningful international search can be carried out, specifically:

3. [ ] Claims Nos.:
because they are dependent claims and are not drafted in accordance with the second and third sentences of Rule 6.4(a).

Box No. III Observations where unity of invention is lacking (Continuation of item 3 of first sheet)

This International Searching Authority found multiple inventions in this international application, as follows:

1. [ ] As all required additional search fees were timely paid by the applicant, this international search report covers all searchable claims.

2. [ ] As all searchable claims could be searched without effort justifying an additional fees, this Authority did not invite payment of additional fees.

3. [ ] As only some of the required additional search fees were timely paid by the applicant, this international search report covers only those claims for which fees were paid, specifically claims Nos.:

4. [ ] No required additional search fees were timely paid by the applicant. Consequently, this international search report is restricted to the invention first mentioned in the claims; it is covered by claims Nos.:

Remark on Protest

[ ] The additional search fees were accompanied by the applicant's protest and, where applicable, the payment of a protest fee.

[ ] The additional search fees were accompanied by the applicant's protest but the applicable protest fee was not paid within the time limit specified in the invitation.

[ ] No protest accompanied the payment of additional search fees.

FURTHER INFORMATION CONTINUED FROM PCT/ISA/ 210

Continuation of Box II.1

Claims Nos.: 1-8

Claims 1-8 relate to subject-matter considered by this Authority to be covered by the provisions of Rule 39.1(iv) / 67.1(iv) PCT. A meaningful search is not possible on the basis of claims 1-8 because they are directed to a diagnostic method practised on the human or animal body (Rule 39.1(iv) PCT) The claims comprise - the step of collecting data (claim 1: " continuously measuring SpO2 at least one of a wrist and a finger of said subject ") - the step of comparing these with standard values (claim 1: " detecting an irregular heart condition from said SpO2 measurement "; the feature of a comparison is implicitly and necessarily present in a step of detecting an irregular heart condition) - the step of finding a significant deviation (claim 1: " detecting an irregular heart condition from said SpO2 measurement "; the feature of finding a deviation is implicitly and necessarily present in a step of detecting an irregular heart condition), and - the step of attributing the deviation to a particular clinical picture, i.e., the deductive medical or veterinary decision phase (claim 1: " detecting an irregular heart condition from said SpO2 measurement "). It is pointed out that no unified criteria exist within the PCT contracting states as to what subject-matter is considered to fall under the provisions of Rules 39.1(iv) and 67.1(iv)PCT, in particular what subject-matter may be considered as industrially applicable or not. In the present case, the claimed subject-matter of method-claims 1-8 may during prosecution in the regional and national phase, be considered to be diagnostic and, therefore, not acceptable under the applicable law.

Masimo Ex. 1008
IPR Petition - USP 10,627,783

INTERNATIONAL SEARCH REPORT

Information on patent family members

International application No
PCT/IB2012/051731

Patent document cited in search report	Publication date	Patent family member(s)	Publication date
US 2007265533 A1	15-11-2007	US 2007265533 A1	15-11-2007
		US 2009227877 A1	10-09-2009
		US 2012095357 A1	19-04-2012
US 2005177051 A1	11-08-2005	US 2005177051 A1	11-08-2005
		US 2009099462 A1	16-04-2009
		WO 2006093712 A2	08-09-2006
WO 2005110238 A1	24-11-2005	EP 1750585 A1	14-02-2007
		US 2008051667 A1	28-02-2008
		WO 2005110238 A1	24-11-2005
EP 0335357 A2	04-10-1989	AT 137648 T	15-05-1996
		CA 1323432 C	19-10-1993
		DE 68926405 D1	13-06-1996
		DE 68926405 T2	05-09-1996
		EP 0335357 A2	04-10-1989
		FI 891494 A	01-10-1989
		JP 2045041 A	15-02-1990
		JP 3286313 B2	27-05-2002
		JP 2002282243 A	02-10-2002
		US 4911167 A	27-03-1990