US 20150214749A1

(19) United States

(12) Patent Application Publication

PARK et al.

(10) Pub. No.: US 2015/0214749 A1

(43) Pub. Date: Jul. 30, 2015

(54) **WIRELESS POWER TRANSMITTING APPARATUS AND WIRELESS POWER RECEIVING APPARATUS**

(71) Applicant: **LG INNOTEK CO., LTD.**, Seoul (KR)

(72) Inventors: **Yu Ri PARK**, Seoul (KR); **Dong Hyuk LEE**, Seoul (KR); **Sang Hak LEE**, Seoul (KR)

(73) Assignee: **LG INNOTEK CO., LTD.**, Seoul (KR)

(21) Appl. No.: **14/606,613**

(22) Filed: **Jan. 27, 2015**

Related U.S. Application Data

(60) Provisional application No. 61/932,258, filed on Jan. 28, 2014.

Publication Classification

(51) **Int. Cl.**

H02J 5/00 (2006.01)

G01R 33/07 (2006.01)

(52) **U.S. Cl.**

CPC *H02J 5/005* (2013.01); *G01R 33/07* (2013.01)

(57) **ABSTRACT**

A wireless power transfer system is disclosed. A wireless power transmitting apparatus for wirelessly transmitting power to a wireless power receiving apparatus includes a transmitting coil for transmitting the power, a hall sensor for sensing a change width of flux density caused y the wireless power receiving apparatus, and a controller for comparing the sensed change width of the flux density with a predetermined critical value to determine whether to transmit the power, wherein magnets provided in the wireless power transmitting apparatus and the wireless power receiving apparatus are disposed such that polarities of the magnets are different from each other at opposite faces thereof. In the wireless power transfer system, the magnets having polarities are disposed in the wireless power transmitting apparatus and the wireless power receiving apparatus. Consequently, the wireless power transmitting apparatus more effectively senses the change width of the flux density to wirelessly transfer power to the wireless power receiving apparatus.

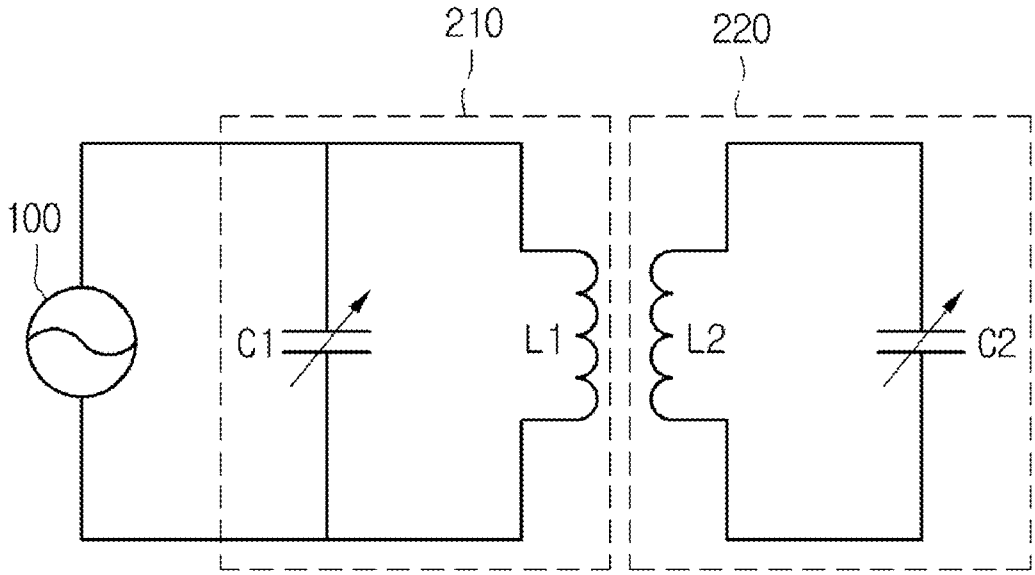

Masimo Ex. 1012
IPR Petition - USP 10,627,783

FIG.1

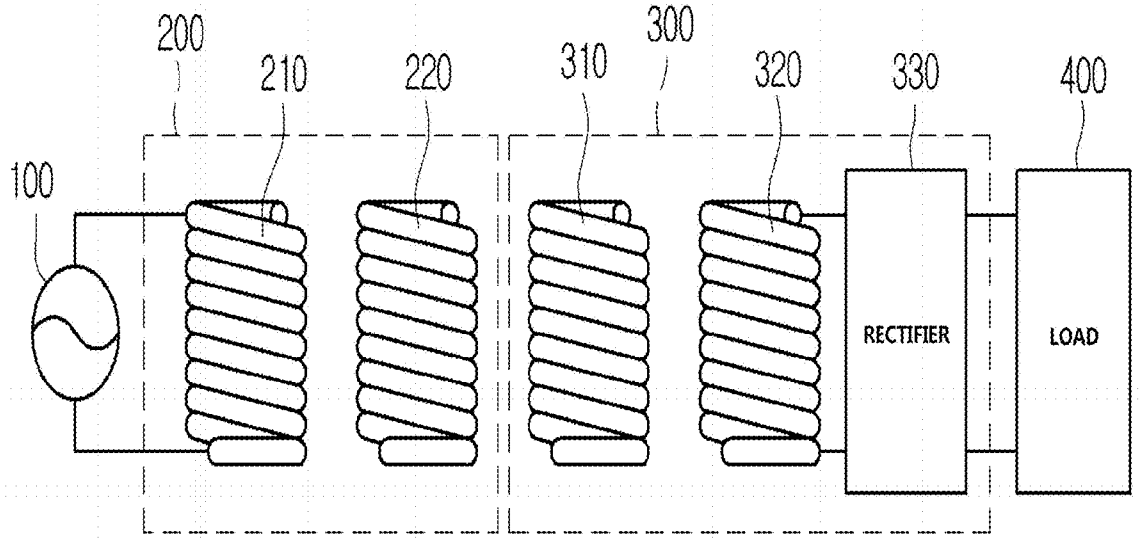

FIG.2

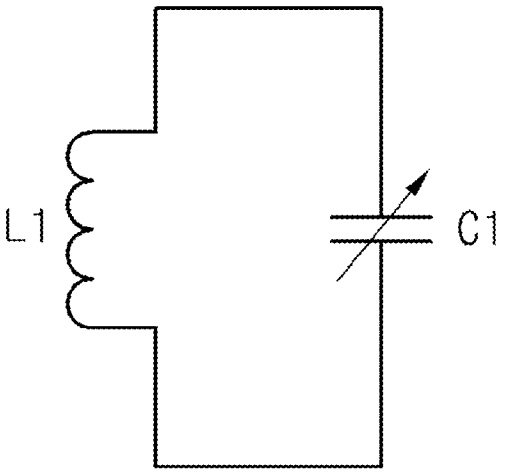

FIG.3

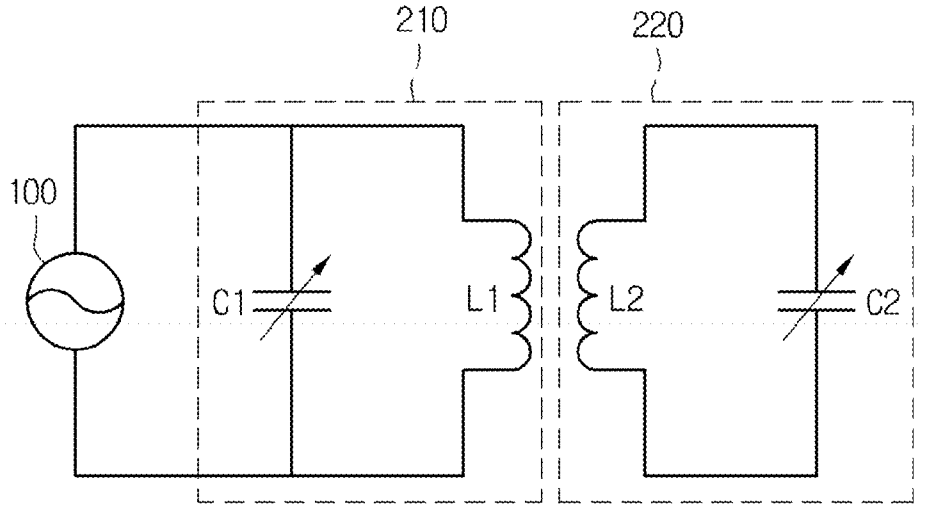

FIG.4

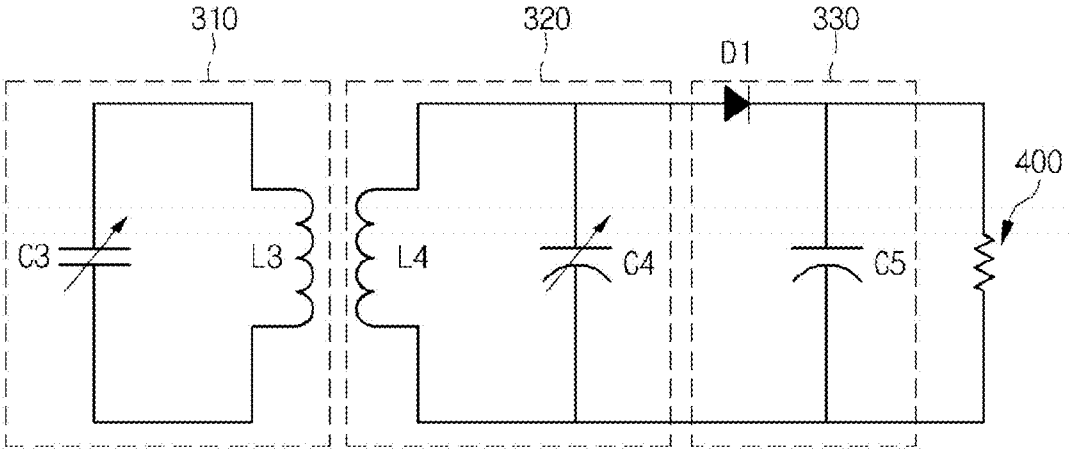

FIG.5

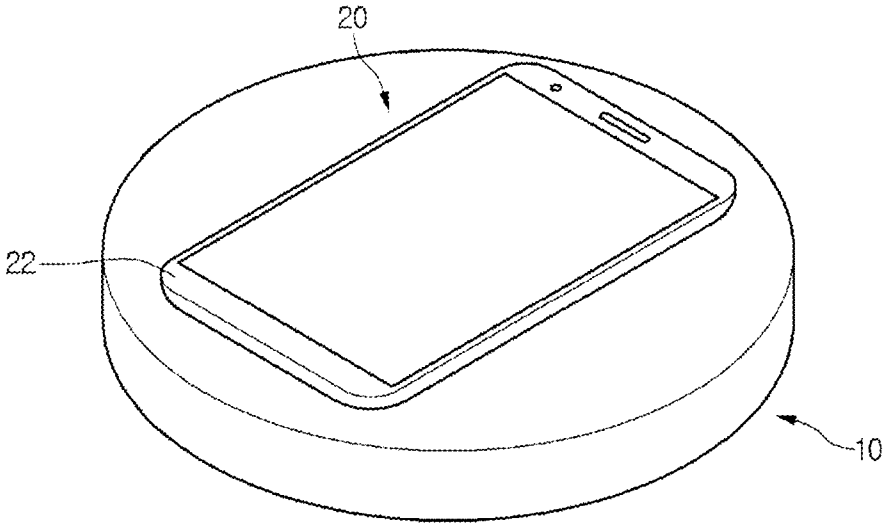

FIG.6

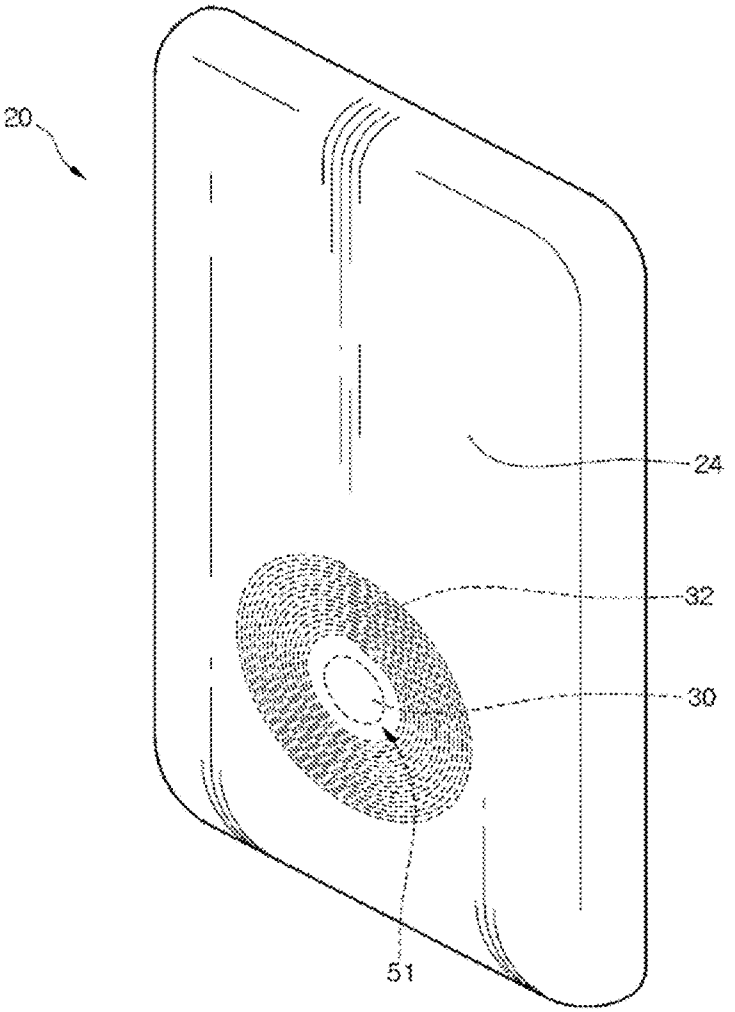

FIG.7

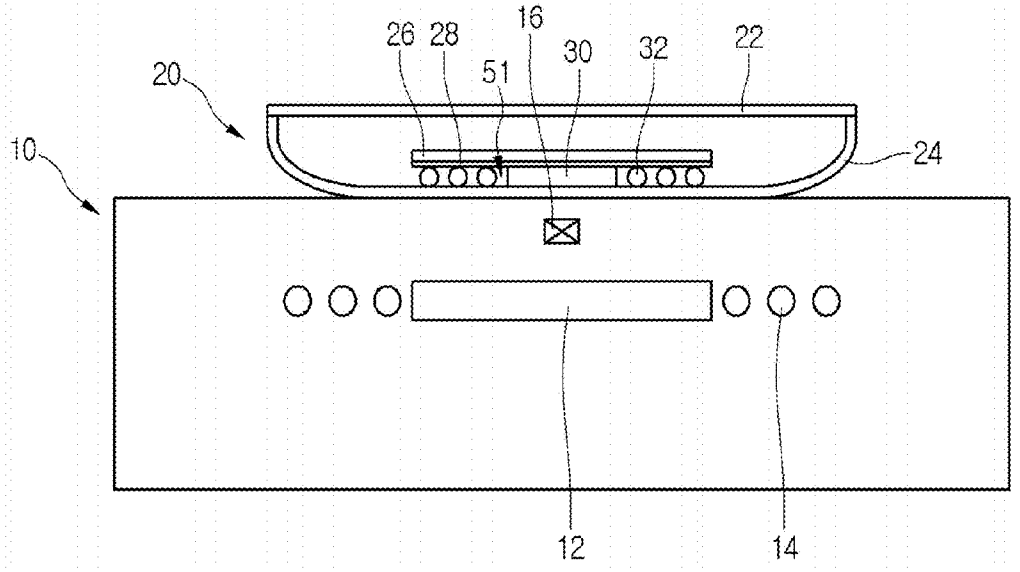

FIG.8

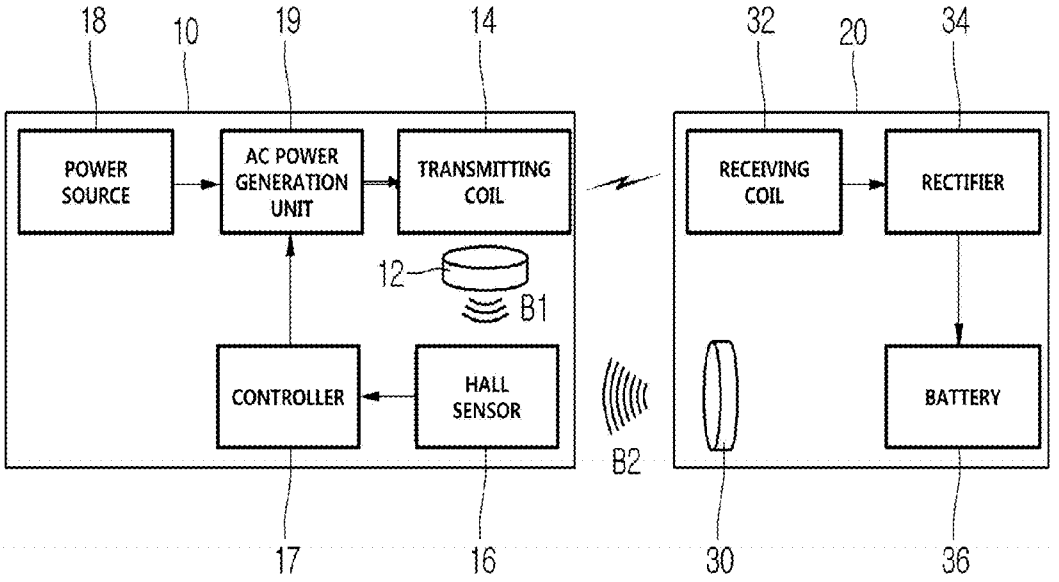

Masimo Ex. 1012
IPR Petition - USP 10,627,783

FIG.9

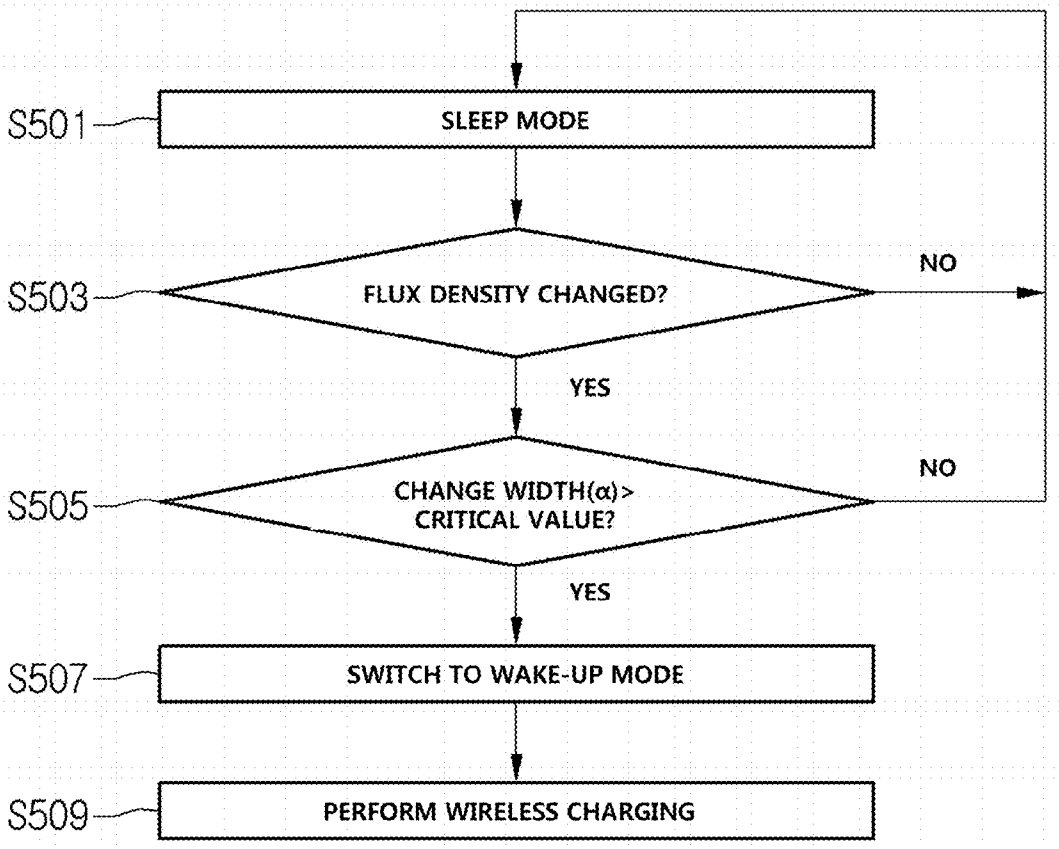
S501
SLEEP MODE
S503
FLUX DENSITY CHANGED?
NO
YES
S505
CHANGE WIDTH(α)>
CRITICAL VALUE?
NO
YES
S507
SWITCH TO WAKE-UP MODE
S509
PERFORM WIRELESS CHARGING

FIG.10

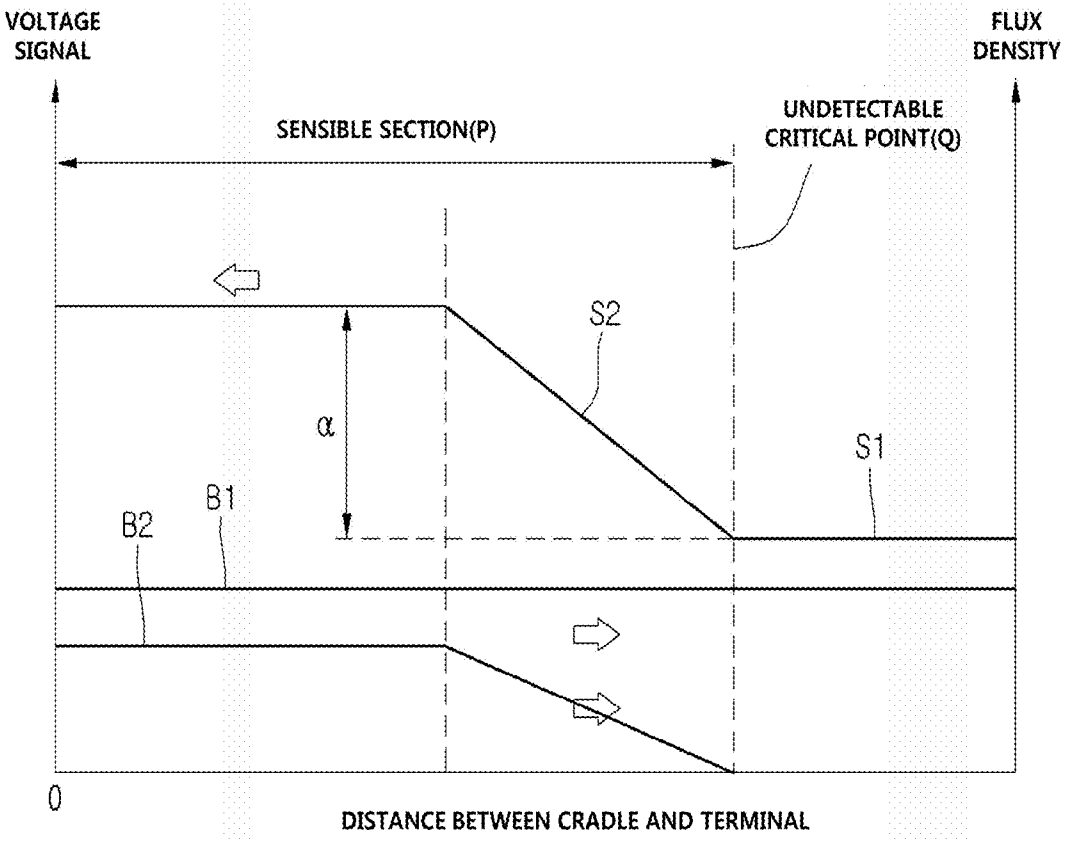
VOLTAGE SIGNAL
FLUX DENSITY
SENSIBLE SECTION(P)
UNDETECTABLE CRITICAL POINT(Q)
S2
α
S1
B1
B2
0
DISTANCE BETWEEN CRADLE AND TERMINAL

FIG.11

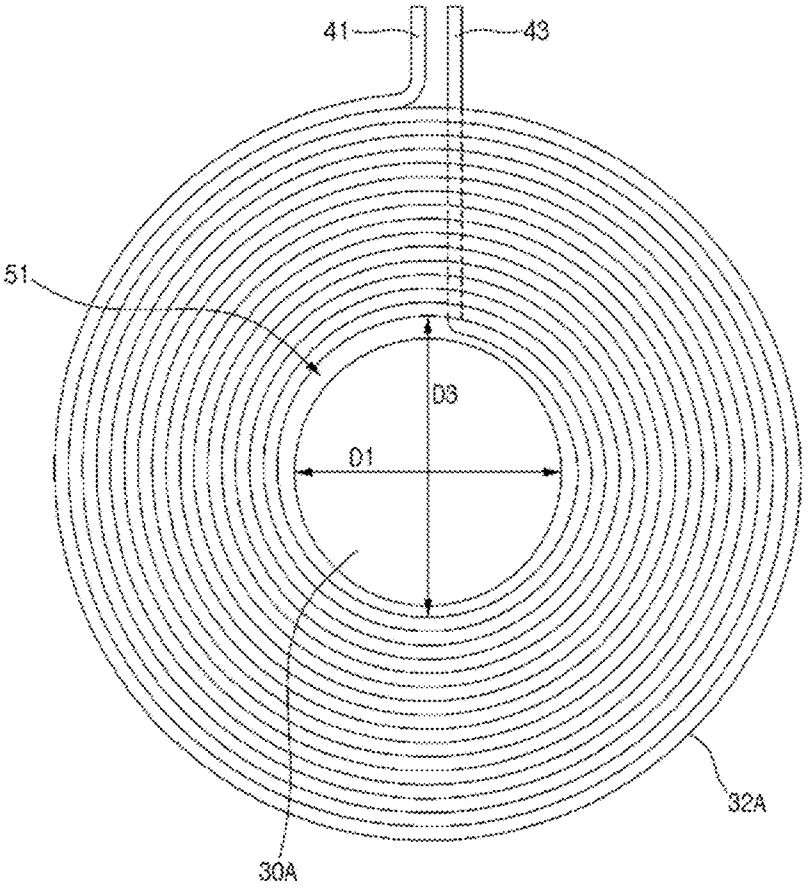

FIG.12

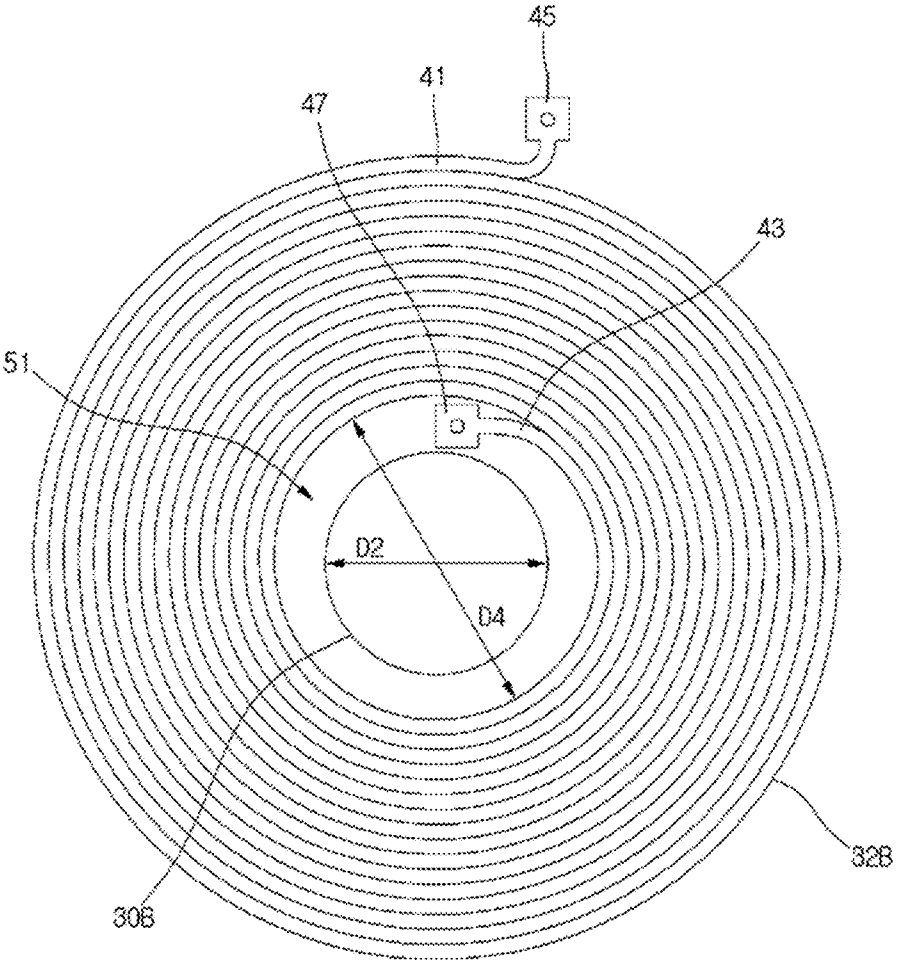

FIG.13

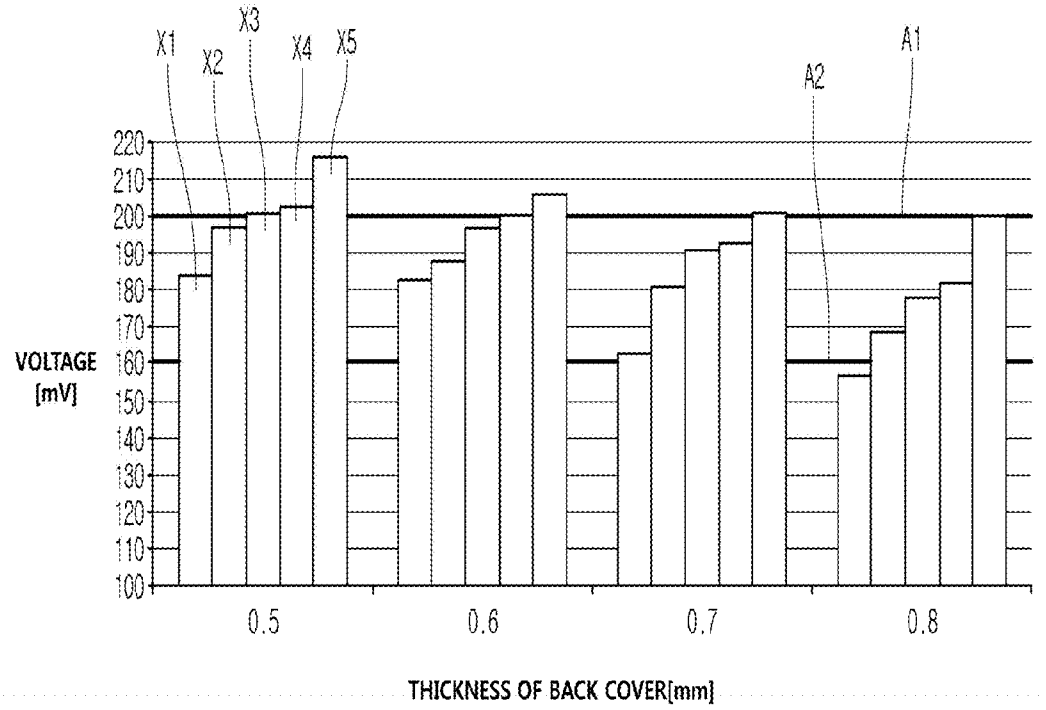
X1
X2
X3
X4
X5
A1
A2
VOLTAGE [mV]
220
210
200
190
180
170
160
150
140
130
120
110
100
0.5
0.6
0.7
0.8
THICKNESS OF BACK COVER[mm]

FIG.14

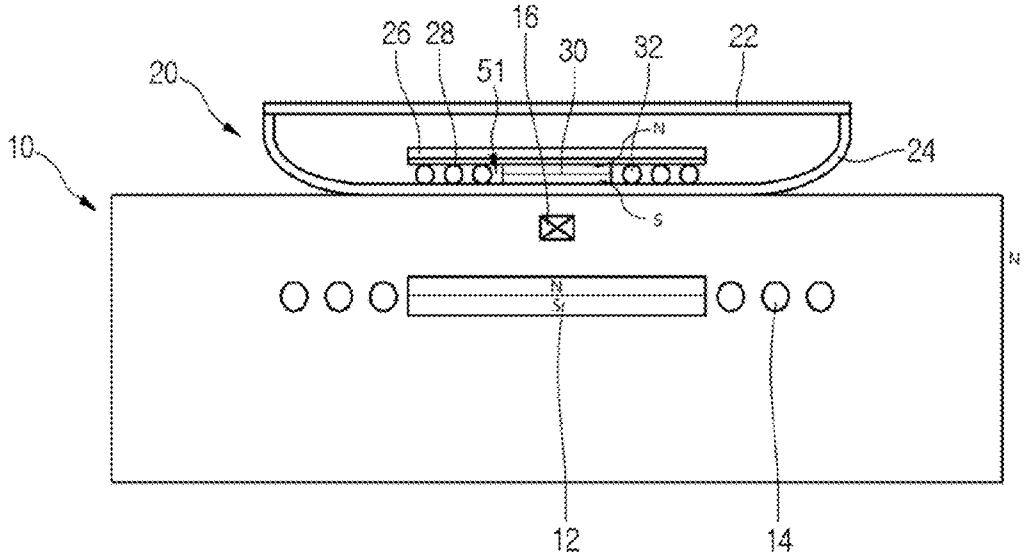
10
20
26
28
16
51
30
32
22
24
N
S
N
S
N
12
14

FIG.15

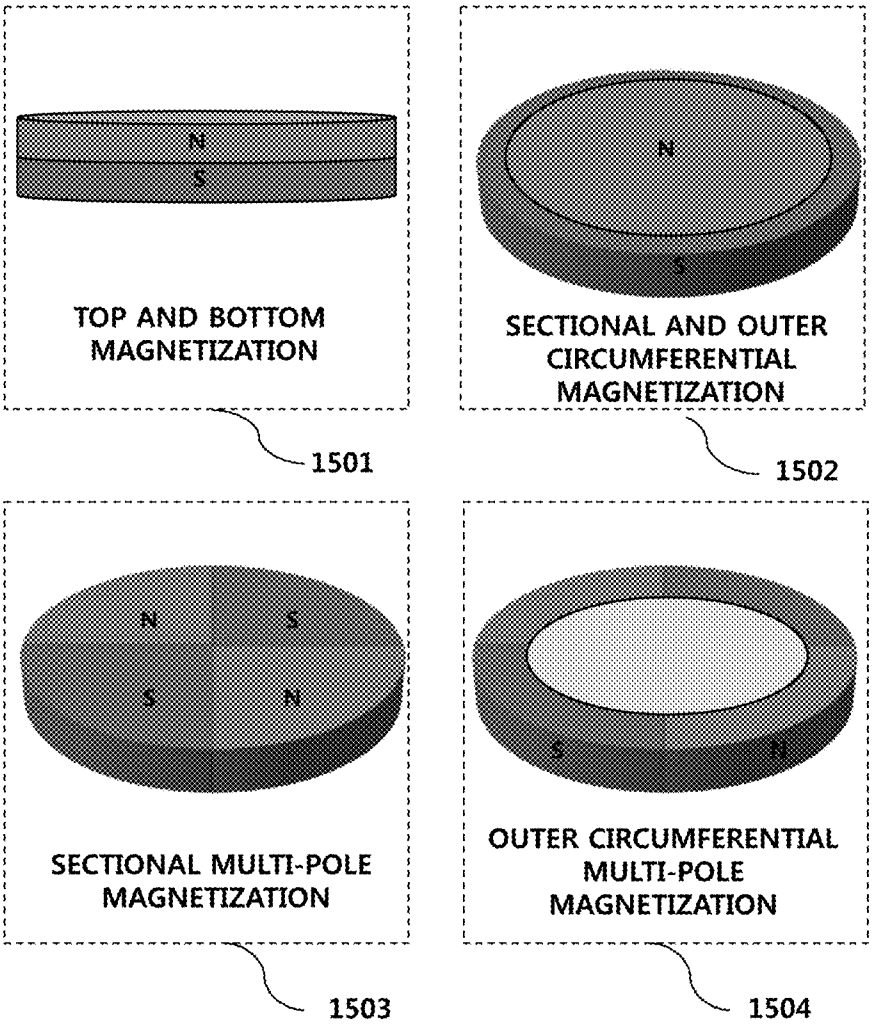
N
S
TOP AND BOTTOM MAGNETIZATION
1501
N
S
SECTIONAL AND OUTER CIRCUMFERENTIAL MAGNETIZATION
1502
N
S
S
N
SECTIONAL MULTI-POLE MAGNETIZATION
1503
S
N
OUTER CIRCUMFERENTIAL MULTI-POLE MAGNETIZATION
1504

FIG.16

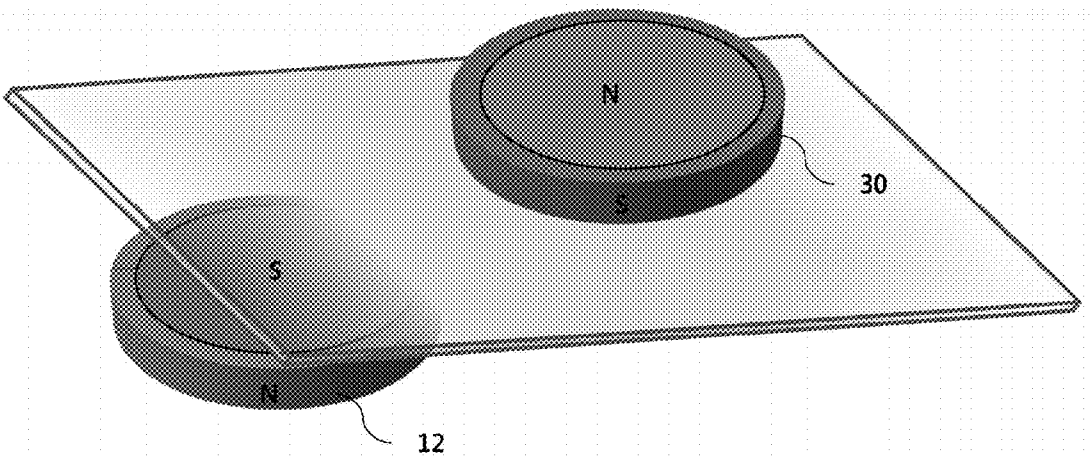

FIG.17

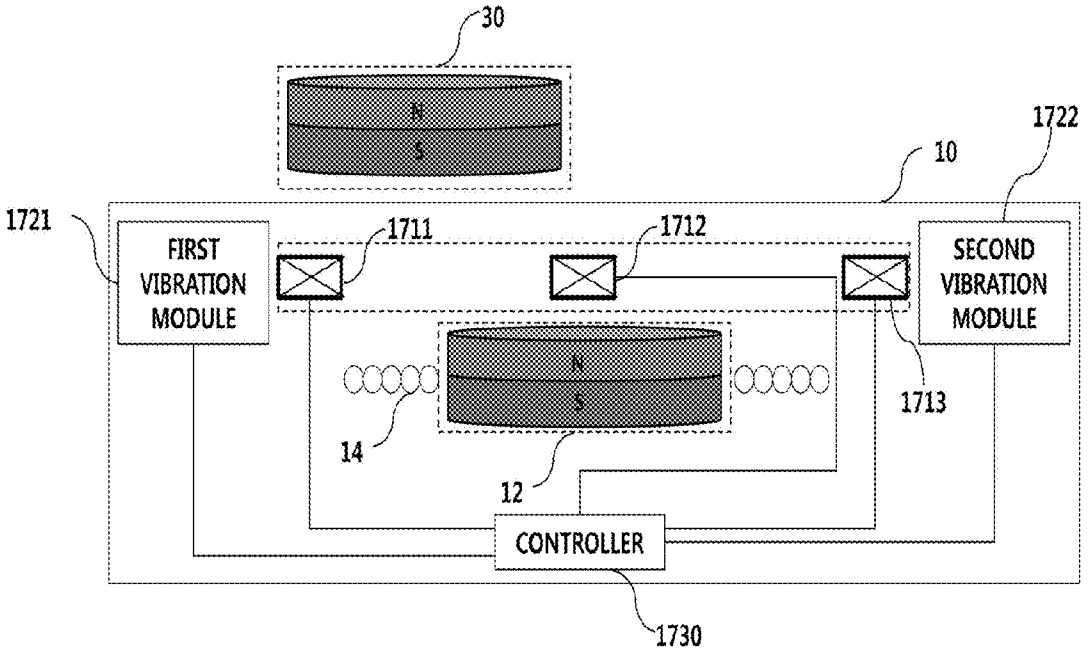
30
N
S
10
1722
1721
FIRST VIBRATION MODULE
1711
1712
SECOND VIBRATION MODULE
N
S
1713
14
12
CONTROLLER
1730

WIRELESS POWER TRANSMITTING APPARATUS AND WIRELESS POWER RECEIVING APPARATUS

CROSS REFERENCE TO RELATED APPLICATION

[0001] This application claims priority under 35 U.S.C. §119 to U.S. Provisional Application No. 61/932,258, filed in U.S. on Jan. 28, 2014, which is hereby incorporated in its entirety by reference as if fully set forth herein.

TECHNICAL FIELD

[0002] Embodiments relate to wireless power transfer. More specifically, embodiments relate to a wireless power transmitting apparatus capable of wirelessly transmitting electric energy and a wireless power receiving apparatus capable of wirelessly receiving electric energy.

BACKGROUND

[0003] With rapid development of information communication technology in recent years, we are moving toward a ubiquitous society based on the information communication technology.

[0004] In order to access information communication devices anytime anywhere, it is necessary to install sensors each having a computer chip capable of performing a communication function in all social facilities. Consequently, the supply of power to the devices and sensors is a new issue. In addition, as kinds of portable devices, such as a mobile phone, a Bluetooth headset, and an iPod music player, have been increased, it takes time and efforts for users to charge batteries. In recent years, wireless power transfer has attracted attention as a method of solving this problem.

[0005] Wireless power transmission or wireless energy transfer refers to a technology of wirelessly transferring electric energy from a transmitter to a receiver using a principle of magnetic induction. In the 1800's, an electric motor or a transformer employing a principle of electromagnetic induction had been used, and afterward a method for transmitting electric energy by emitting electromagnetic waves, such as radio waves or lasers, has been attempted. Actually, electrical toothbrushes or electrical razors, which are frequently used in daily life, are charged based on the principle of electromagnetic induction.

[0006] Wireless energy transfer schemes used until now may be divided into a magnetic induction scheme, an electromagnetic resonance scheme, and a power transfer scheme using a short-wavelength radio frequency.

[0007] The magnetic induction scheme is a technology using a phenomenon in which when two coils are disposed adjacent to each other and current is supplied to one of the coil, a magnetic flux is generated and, as a result, electromotive force is generated in the other coil. The magnetic induction scheme is being rapidly commercialized for small-sized devices, such as a mobile phone. The magnetic induction scheme has an advantage in that it is possible to transfer power of a maximum of several hundreds of kilowatts (kW) with high efficiency. However, the magnetic induction scheme has a disadvantage in that the maximum transfer distance is 1 cm or less and thus coils must be disposed adjacent to a charger or the bottom of a mobile phone.

[0008] The electromagnetic resonance scheme is characterized by using an electric field or a magnetic field instead of utilizing an electromagnetic wave or current. The electromagnetic resonance scheme has an advantage in that the electromagnetic resonance scheme is not affected by the electromagnetic wave and is thus safe for other electronic devices and human bodies. However, the electromagnetic resonance scheme has a disadvantage in that the electromagnetic resonance scheme is utilized within a limited distance and space and energy transfer efficiency is somewhat low.

[0009] The short-wavelength wireless power transfer scheme, simply an RF scheme, utilizes that energy can be directly transmitted and received in a radio wave form. This technology is an RF wireless power transfer scheme using a rectenna. Rectenna, which is a compound word of an antenna and a rectifier, means an element for directly converting RF power into DC power. That is, the RF scheme is a technology of converting an AC radio wave into DC. In recent years, research has been actively conducted on commercialization of the RF scheme with improvement in efficiency of the RF scheme.

[0010] Wireless power transfer may be variously utilized in various industries, such as IT, railway, and electric home appliance industries as well as a mobile industry.

[0011] Particularly, magnets may be provided in a wireless power transmitter and a wireless power receiver such that the transmitter can sense the receiver. The transmitter may sense a magnetic field of the receiver to determine whether to supply power to the receiver.

[0012] Conventionally, however, it is not possible for the transmitter to effectively sense the magnetic field of the receiver.

SUMMARY

[0013] Embodiments provide a wireless power transmitting apparatus, a wireless power receiving apparatus, and a wireless power transfer system using the same.

[0014] Further, embodiments provide a wireless power transmitting apparatus capable of effectively sensing a magnetic field of a receiver magnet in a wireless power transfer system.

[0015] Further, embodiments provide a wireless power transfer system capable of more effectively sensing a change of flux density using polarities of magnets.

[0016] Further, embodiments provide a wireless power transfer system capable of optimizing arrangement between a transmitter and a receiver necessary for wireless power transfer using polarities of magnets.

[0017] Further, embodiments provide a method of arranging polarities of a transmitter magnet and a receiver magnet to more effectively sense a magnetic field of the receiver magnet required to start wireless power transfer.

[0018] It should be noted that objects of the disclosure are not limited to the objects as mentioned above, and other unmentioned objects of the disclosure will be clearly understood by those skilled in the art to which the disclosure pertains from the following description.

[0019] Embodiments provide a wireless power transmitting apparatus, a wireless power receiving apparatus, and a wireless power transfer system using the same.

[0020] Further, embodiments provide a method of arranging polarities of a transmitter magnet and a receiver magnet to more effectively sense a magnetic field of the receiver magnet required to start wireless power transfer and a method of controlling the transmitter and the receiver to be rapidly arranged for wireless transfer using the same.

Masimo Ex. 1012
IPR Petition - USP 10,627,783

[0021] In one embodiment, a wireless power transmitting apparatus for wirelessly transmitting power to a wireless power receiving apparatus includes a transmitting coil for transmitting the power, a hall sensor for sensing a change width of flux density caused by the wireless power receiving apparatus, and a controller for comparing the sensed change width of the flux density with a predetermined critical value to determine whether to transmit the power, wherein magnets provided in the wireless power transmitting apparatus and the wireless power receiving apparatus are disposed such that polarities of the magnets are different from each other at opposite faces thereof.

[0022] In another embodiment, a wireless power receiving apparatus for wirelessly receiving power from a wireless power transmitting apparatus includes a receiving coil for receiving the power and a second magnet for generating flux density having a predetermined intensity at one side of a face thereof opposite to the wireless power transmitting apparatus, wherein a first magnet provided in the wireless power transmitting apparatus and the second magnet are disposed such that polarities of the magnets are different from each other at opposite faces thereof.

[0023] The above aspects of the disclosure are merely some of the preferred embodiments and various embodiments into which the technical features are incorporated may be derived and understood by those skilled in the art from the detailed description which follows.

BRIEF DESCRIPTION OF THE DRAWINGS

[0024] Arrangements and embodiments may be described in detail with reference to the following drawings in which like reference numerals refer to like elements and wherein:

[0025] FIG. **1** is a view illustrating a wireless power transfer system according to an embodiment;

[0026] FIG. **2** is an equivalent circuit diagram of a transmitting induction coil according to an embodiment;

[0027] FIG. **3** is an equivalent circuit diagram of a power source and a wireless power transmitting apparatus according to an embodiment;

[0028] FIG. **4** is an equivalent circuit diagram of a wireless power receiving apparatus according to an embodiment;

[0029] FIG. **5** is a perspective view showing a wireless power transfer system according to an embodiment;

[0030] FIG. **6** is a perspective view showing the back of a terminal of FIG. **5**;

[0031] FIG. **7** is a sectional view showing a wireless power transfer system according to an embodiment;

[0032] FIG. **8** is a block diagram of a wireless power transfer system according to an embodiment;

[0033] FIG. **9** is a flowchart illustrating an operation method of a wireless power transfer system according to an embodiment;

[0034] FIG. **10** is a view showing a voltage signal detected by a hall sensor based on the distance between a cradle and a terminal;

[0035] FIG. **11** is a view showing that a second magnet is disposed in a wound coil structure;

[0036] FIG. **12** is a view showing that a second magnet is disposed in a lead frame coil structure;

[0037] FIG. **13** is a view showing flux density based on disposition of the second magnet in the lead frame coil structure;

[0038] FIG. **14** is a view illustrating a polarity arrangement method of permanent magnets provided in a wireless power transmitting apparatus and a wireless power receiving apparatus according to an embodiment;

[0039] FIG. **15** is a view illustrating a magnetization method of magnets applied to a wireless power transmitting apparatus and a wireless power receiving apparatus according to an embodiment;

[0040] FIG. **16** is a view illustrating a polarity arrangement method of a first magnet and a second magnet in a case in which a magnet applied to an embodiment is magnetized using a sectional and outer circumferential magnetization method; and

[0041] FIG. **17** is a view showing internal components of a wireless power transmitting apparatus according to another embodiment.

DESCRIPTION OF SPECIFIC EMBODIMENTS

[0042] Reference will now be made in detail to the preferred embodiments, examples of which are illustrated in the accompanying drawings. The suffixes "module" and "unit" of elements herein are used for convenience of description and thus can be used interchangeably and do not have any distinguishable meanings or functions.

[0043] It will be understood that when an element is referred to as being 'on' or 'under' another element, it can be directly on/under the element, and one or more intervening elements may also be present. When an element is referred to as being 'on' or 'under', 'under the element' as well as 'on the element' can be included based on the element.

[0044] In the description of embodiments, a wireless power transmitting apparatus constituting a wireless power transfer system will also be referred to as a transmitter, a transmission end, a transmitting apparatus, a transmission side, or a power transmitting apparatus for the convenience of description. In addition, a wireless power receiving apparatus will also be referred to as a receiver, a terminal, a receiving side, a receiving apparatus, or a power receiving apparatus for the convenience of description.

[0045] A transmitter according to an embodiment may be configured in the form of a pad or a cradle. A transmitter may include a plurality of wireless power transmitting means, which may wirelessly transmit to a plurality of receivers.

[0046] A receiver according to an embodiment may be used in a mobile phone, a smart phone, a laptop computer, a terminal for digital broadcasting, a personal digital assistant (PDA), a portable multimedia player (PMP), a navigation system, an MP3 player, and other small electronic devices. However, the disclosure is not limited thereto. The receiver may be any device having a wireless power transmitting means for charging a battery mounted therein. FIG. **1** is a view illustrating a wireless power transfer system according to an embodiment.

[0047] Referring to FIG. **1**, the wireless power transfer system may include a power source **100**, a wireless power transmitting apparatus **200**, a wireless power receiving apparatus **300**, and a load **400**.

[0048] In an embodiment, the power source **100** may be included in the wireless power transmitting apparatus **200**. However, the disclosure is not limited thereto.

[0049] The wireless power transmitting apparatus **200** may include a transmitting induction coil **210** and a transmitting resonance coil **220**.

[0050] The wireless power receiving apparatus **300** may include a receiving resonance coil **310**, a receiving induction coil **320**, and a rectifier **330**.

Masimo Ex. 1012
IPR Petition - USP 10,627,783

[0051] Both ends of the power source **100** may be connected to both ends of the transmitting induction coil **210**.

[0052] The transmitting resonance coil **220** may be apart from the transmitting induction coil **210** by a predetermined distance.

[0053] The receiving resonance coil **310** may be apart from the receiving induction coil **320** by a predetermined distance.

[0054] Both ends of the receiving induction coil **320** may be connected to both ends of the RECTIFIER **330**. The load **400** may be connected to both ends of the rectifier **330**. In an embodiment, the load **400** may be included in the wireless power receiving apparatus **300**.

[0055] Power generated by the power source **100** may be transferred to the wireless power transmitting apparatus **200**. The power transferred to the wireless power transmitting apparatus **200** may be transferred to the wireless power receiving apparatus **300** resonating with the wireless power transmitting apparatus **200**, i.e. having the same resonance frequency value as the wireless power transmitting apparatus **200**, due to a resonance phenomenon.

[0056] Hereinafter, a power transfer process will be described in more detail.

[0057] The power source **100** may generate AC power having a predetermined frequency and transfer the generated AC power to the wireless power transmitting apparatus **200**.

[0058] The transmitting induction coil **210** and the transmitting resonance coil **220** may be inductively coupled with each other. That is, AC current may be generated in the transmitting induction coil **210** due to the AC power supplied from the power source **100**. Due to electromagnetic induction based on such AC current, the AC current may also be induced in the transmitting resonance coil **220**, which is physically spaced apart from the transmitting induction coil **210**.

[0059] Subsequently, the power transferred to the transmitting resonance coil **220** may be transferred to the wireless power receiving apparatus **300** having the same resonance frequency value as the wireless power transmitting apparatus **200** using a frequency resonance scheme due to resonance.

[0060] Power may be transferred between two LC circuits, impedances of which are matched with each other, due to resonance. Power transfer based on resonance may transfer power to a longer distance with higher transfer efficiency than that based on an electromagnetic induction scheme.

[0061] The receiving resonance coil **310** may receive the power transferred from the transmitting resonance coil **220** using the frequency resonance scheme. AC current may flow in the receiving resonance coil **310** due to the received power. The power transferred to the receiving resonance coil **310** may be transferred to the receiving induction coil **320** inductively coupled with the receiving resonance coil **310** due to electromagnetic induction. The power transferred to the receiving induction coil **320** may be rectified by the rectifier **330** and then transferred to the load **400**.

[0062] In an embodiment, the transmitting induction coil **210**, the transmitting resonance coil **220**, the receiving resonance coil **310**, and the receiving induction coil **320** may have a spiral structure or a helical structure. However, the disclosure is not limited thereto.

[0063] The transmitting resonance coil **220** and the receiving resonance coil **310** may be resonantly coupled with each other such that power can be transferred at a resonance frequency.

[0064] The efficiency of power transfer between the wireless power transmitting apparatus **200** and the wireless power receiving apparatus **300** may be greatly improved due to resonant coupling between the transmitting resonance coil **220** and the receiving resonance coil **310**.

[0065] In the wireless power transfer system as described above, power transfer is performed based on the frequency resonance scheme.

[0066] In an embodiment, power transfer may be performed based on an electromagnetic induction scheme in addition to the frequency resonance scheme.

[0067] That is, in a case in which the wireless power transfer system performs power transfer based on electromagnetic induction, the transmitting resonance coil **220** included in the wireless power transmitting apparatus **200** and the receiving resonance coil **310** included in the wireless power receiving apparatus **300** may be omitted.

[0068] In wireless power transfer, a quality factor and a coupling coefficient may be important. That is, power transfer efficiency may be proportional to the quality factor and the coupling coefficient. As at least one selected from between the quality factor and the coupling coefficient is increased, therefore, power transfer efficiency may be improved.

[0069] The quality factor may indicate an index of energy that can be accumulated near the wireless power transmitting apparatus **200** or the wireless power receiving apparatus **300**.

[0070] The quality factor may vary based on an operating frequency w, the shape, dimension, and material of a coil, etc. The quality factor may be represented by Equation 1.

$$Q=w*L/R \quad \text{[Equation 1]}$$

[0071] Where L indicates inductance of a coil and R indicates resistance corresponding to power loss quantity caused in the coil.

[0072] The quality factor may have a value of 0 to infinity. As the quality factor is increased, the efficiency of power transfer between the wireless power transmitting apparatus **200** and the wireless power receiving apparatus **300** may be improved.

[0073] The coupling coefficient, which indicates a degree of magnetic coupling between a transmitting side coil and a receiving side coil, may have a range of 0 to 1.

[0074] The coupling coefficient may vary based on relative position of the transmitting side coil and the receiving side coil or the distance between the transmitting side coil and the receiving side coil.

[0075] FIG. **2** is an equivalent circuit diagram of a transmitting induction coil according to an embodiment.

[0076] As shown in FIG. **2**, the transmitting induction coil **210** may include an inductor L**1** and a capacitor C**1**, by which the transmitting induction coil **210** may be configured as a circuit having proper inductance and capacitance values.

[0077] The transmitting induction coil **210** may be configured as an equivalent circuit in which both ends of the inductor L**1** are connected to both ends of the capacitor C**1**. That is, the transmitting induction coil **210** may be configured as an equivalent circuit having the inductor L**1** and the capacitor C**1** connected in parallel.

[0078] The capacitor C**1** may be a variable capacitor. As capacitance of the capacitor C**1** is adjusted, impedance matching may be performed. Equivalent circuits of the transmitting resonance coil **220**, the receiving resonance coil **310**, and the receiving induction coil **320** may each be identical or similar to that shown in FIG. **2**. However, the disclosure is not limited thereto.

Masimo Ex. 1012
IPR Petition - USP 10,627,783

[0079] FIG. **3** is an equivalent circuit diagram of a power source and a wireless power transmitting apparatus according to an embodiment.

[0080] As shown in FIG. **3**, the transmitting induction coil **210** and the transmitting resonance coil **220** may include inductors L**1** and L**2** having inductance values and capacitors C**1** and C**2** having capacitance values, respectively.

[0081] FIG. **4** is an equivalent circuit diagram of a wireless power receiving apparatus according to an embodiment.

[0082] As shown in FIG. **4**, the receiving resonance coil **310** and the receiving induction coil **320** may include inductors L**3** and L**4** having inductance values and capacitors C**3** and C**4** having capacitance values, respectively.

[0083] The rectifier **330** may convert the AC power transferred from the receiving induction coil **320** into DC power and transfer the DC power to the load **400**.

[0084] Specifically, the rectifier **330** may include a rectifier and a smoothing circuit, which are not shown. In an embodiment, the rectifier may be a silicon rectifier. As shown in FIG. **4**, the rectifier may be equivalent as a diode D**1**. However, the disclosure is not limited thereto.

[0085] The rectifier may convert the AC power transferred from the receiving induction coil **320** into DC power.

[0086] The smoothing circuit may remove an AC component from the DC power converted by the rectifier to output smooth DC power. In an embodiment, a rectification capacitor C**5** may be used as the smoothing circuit as shown in FIG. **4**. However, the disclosure is not limited thereto.

[0087] The DC power transferred from the rectifier **330** may be DC voltage or DC current. However, the disclosure is not limited thereto.

[0088] The load **400** may be any charging battery or device needing DC power. For example, the load **400** may be a battery.

[0089] The wireless power receiving apparatus **300** may be mounted in an electronic device, such as a mobile phone, a laptop computer, or a mouse, which needs power. Consequently, the receiving resonance coil **310** and the receiving induction coil **320** may each have a shape suitable for the electronic device.

[0090] The wireless power transmitting apparatus **200** may exchange information with the wireless power receiving apparatus **300** through in band communication or out of band communication.

[0091] The in band communication may be a communication for exchanging information between the wireless power transmitting apparatus **200** and the wireless power receiving apparatus **300** using a signal having a frequency used for wireless power transfer. To this end, the wireless power receiving apparatus **300** may further include a switch and may receive or may not receive the power transmitted from the wireless power transmitting apparatus **200** through a switching operation of the switch. Consequently, the wireless power transmitting apparatus **200** may detect power quantity consumed by the wireless power transmitting apparatus **200** to recognize an on or off signal of the switch included in the wireless power receiving apparatus **300**.

[0092] Specifically, the wireless power receiving apparatus **300** may change power quantity absorbed by a resistance element using the resistance element and the switch to change power quantity consumed by the wireless power transmitting apparatus **200**. The wireless power transmitting apparatus **200** may sense change of the consumed power to acquire state information of the load **400**. The switch and the resistance element may be connected in series. In an embodiment, the state information of the load **400** may include information regarding current charge quantity and the change of charge quantity of the load **400**. The load **400** may be included in the wireless power receiving apparatus **300**.

[0093] More specifically, when the switch is opened, power absorbed by the resistance element becomes 0, and thus power consumed by the wireless power transmitting apparatus **200** decreases.

[0094] When the switch is closed, power absorbed by the resistance element becomes greater than 0, and thus power consumed by the wireless power transmitting apparatus **200** increases. When the wireless power receiving apparatus **300** repeatedly performs the above-described operation, the wireless power transmitting apparatus **200** may detect power consumed by the wireless power transmitting apparatus **200** to perform digital communication with the wireless power receiving apparatus **300**.

[0095] According to the above-described operation, the wireless power transmitting apparatus **200** may receive the state information of the load **400** and transmit power suitable therefor.

[0096] On the other hand, the wireless power transmitting apparatus **200** may include a resistance element and a switch, by which state information of the wireless power transmitting apparatus **200** may be transferred to the wireless power receiving apparatus **300**. In an embodiment, the state information of the wireless power transmitting apparatus **200** may include information regarding the maximum power quantity that can be transferred by the wireless power transmitting apparatus **200**, the number of wireless power receiving apparatuses **300** to which the wireless power transmitting apparatus **200** provides power, and available power quantity of the wireless power transmitting apparatus **200**.

[0097] Next, out of band communication will be described.

[0098] The out of band communication is a communication for exchanging information necessary for transferring power using a frequency band different from a resonance frequency band. The wireless power transmitting apparatus **200** and the wireless power receiving apparatus **300** may each be equipped with an out of band communication module, by which information necessary for transferring power therebetween may be exchanged. An out of band communication module may be mounted in the power source **100**. However, the disclosure is not limited thereto. In an embodiment, the out of band communication module may use a short distance communication scheme, such as Bluetooth, Zigbee, a wireless LAN, or a near field communication (NFC). However, the disclosure is not limited thereto.

[0099] FIG. **5** is a perspective view showing a wireless power transfer system according to an embodiment.

[0100] Referring to FIG. **5**, the wireless power transfer system may include a cradle **10** and a terminal **20**.

[0101] The cradle **10** may include the power source and the wireless power transmitting apparatus shown in FIG. **1**. That is, the power source and the wireless power transmitting apparatus may be mounted in the cradle **10**. The cradle **10** may have a circular, oval, square, or rectangular shape when viewed from above. However, the disclosure is not limited thereto.

[0102] The top of the cradle **10** may contact one surface of the terminal **20** in a surface contact manner. At least a portion

Masimo Ex. 1012
IPR Petition - USP 10,627,783

of the top of the cradle **10** may have the same shape as the back of the terminal **20**. However, the disclosure is not limited thereto.

[0103] The transmitting coils **210** and **220** (see FIG. **1**) of the wireless power transmitting apparatus mounted in the cradle **10** may be disposed in plane opposite to the top of the cradle **10**. The transmitting coils **210** and **220** may be disposed parallel to the top of the cradle **10** such that power of the transmitting coils **210** and **220** can be uniformly transferred to the terminal **20**.

[0104] The terminal **20** may refer to any electronic device that includes a battery **36** for charging and performs a predetermined electronic function using power charged in battery **36**. For example, the terminal **20** may include a mobile device, such as a smart phone or a tablet PC, or an electric home appliance, such as a television, a refrigerator, or a washing machine.

[0105] The terminal **20** may include the wireless power receiving apparatus and load shown in FIG. **1**. That is, the wireless power receiving apparatus and load may be mounted in the terminal **20**.

[0106] For charging, the terminal **20** may be placed on the top of the cradle **10**. At this time, a back cover **24** of the terminal **20** may contact the top of the cradle with a front cover **22** of the terminal **20** upward. Consequently, power may be wirelessly provided from the cradle **10** such that the load is charged with the power.

[0107] As shown in FIG. **6**, the receiving coil **32** and the magnet **30** may be disposed adjacent to the back of the terminal **20** corresponding to the top of the cradle **10**. The receiving coil **32** may also be disposed in plane opposite to the transmitting coils **210** and **220** of the cradle **10**, the top of the cradle **10**, and the back cover **24** of the wireless power receiving apparatus. Particularly, when the receiving coil of the terminal **20** is positioned parallel to the transmitting coils **210** and **220** of the cradle **10**, power transfer efficiency of power transferred from the transmitting coils **210** and **220** of the cradle **10** to the receiving coil **32** of the terminal **20** may be maximized.

[0108] Hereinafter, the structure of a wireless power transfer system according to an embodiment will be described in more detail with reference to FIG. **7**.

[0109] FIG. **7** is a sectional view showing a wireless power transfer system according to an embodiment.

[0110] As shown in FIG. **7**, the cradle **10** may include a transmitting coil **14** and a first magnet **12**. The transmitting coil **14** and the first magnet **12** may be disposed adjacent to the top of the cradle **10**. The transmitting coil **14** and the first magnet **12** may be disposed on the same plane.

[0111] The transmitting coil **14** may be the transmitting induction coil and/or the transmitting resonance coil shown in FIG. **1**. For example, in a resonance scheme, both the transmitting induction coil and the transmitting resonance coil may be used. On the other hand, in an electromagnetic induction scheme, only the transmitting induction coil may be used.

[0112] The transmitting coil **14** may be disposed to surround the first magnet **12**. The transmitting coil **14** has a number of turns, which are spaced apart from each other. However, the disclosure is not limited thereto. The transmitting coil **14** may be disposed parallel to an imaginary horizontal plane. The transmitting coil **14** with the above-described structure may have an empty central region.

[0113] The first magnet **12** may be disposed in the central region of the transmitting coil **14**. The first magnet **12** may have a thickness equal to, greater than, or less than that of the transmitting coil **14**. The thickness and area of the first magnet **12** may vary depending upon flux density necessary for the first magnet **12** and the occupied area of the first magnet **12**.

[0114] The terminal **20** may include a shielding member **26**, a receiving coil **32**, and a second magnet **30**. The receiving coil **32** and the second magnet **30** may be disposed on the same plane.

[0115] The receiving coil **32** may be the receiving resonance coil and/or the receiving induction coil shown in FIG. **1**. For example, in the resonance scheme, both the receiving resonance coil and the receiving induction coil may be used. On the other hand, in the electromagnetic induction scheme, only the receiving induction coil may be used.

[0116] The receiving coil **32** may be disposed to surround the second magnet **30**. The receiving coil **32** has a number of turns, which are spaced apart from each other. The receiving coil **32** may be disposed parallel to an imaginary horizontal plane. The receiving coil **32** with the above-described structure may have an empty central region.

[0117] The second magnet **30** may be disposed in the central region of the receiving coil **32**. The central region of the receiving coil **32** may be less than that of the transmitting coil **14**. However, the disclosure is not limited thereto. The second magnet **30** may have a thickness equal to, greater than, or less than that of the receiving coil **32**. The thickness and area of the second magnet **30** may vary depending upon flux density necessary for the second magnet **30** and the occupied area of the second magnet **30**.

[0118] The second magnet **30** enables approach or contact of the terminal **20** to be sensed by the cradle **10**.

[0119] To this end, the cradle **10** may further include a hall sensor **16**. The hall sensor **16** may be disposed between the top of the cradle **10** and the first magnet **12**. However, the disclosure is not limited thereto. The hall sensor **16** may be disposed more adjacent to the top of the cradle **10** than the first magnet **12**. The hall sensor **16** may be disposed in the cradle **10** between the first magnet **12** of the cradle **10** and the second magnet **30** of the terminal **20**. When there is no terminal **20**, the hall sensor **16** senses only flux density of the first magnet **12**. On the other hand, when the terminal **20** approaches the cradle **10**, the hall sensor **16** may sense flux density of the second magnet **30** as well as flux density of the first magnet **12**. Consequently, the cradle **10** senses flux density of the first magnet **12** and flux density of the second magnet **30** sensed when the terminal **20** is placed on the cradle **10** based on flux density of the first magnet **12** sensed when there is no terminal **20**. In a case in which a change width α of the flux density is equal to or greater than a critical value, it may be determined that the terminal **20** is placed on the cradle **10** for charging and the terminal **20** may be charged.

[0120] In the above embodiment, the hall sensor **16** is described as being disposed between the top of the cradle **10** and the first magnet **12**. However, the disclosure is not limited thereto. In another embodiment, the hall sensor **16** may be disposed at one side of the first magnet **12** under the first magnet **12** or at one side of the transmitting coil **14** under the transmitting coil **14**.

[0121] To this end, the second magnet **30** may be formed of a material causing the change width α of the flux density which is equal to or greater than the critical value. For

Masimo Ex. 1012
IPR Petition - USP 10,627,783

example, the critical value may be 32G. In the standards, a critical value of 40G may be required.

[0122] The second magnet **30** may be formed of an electrical sheet. For example, the electrical sheet may contain 1% to 5% of silicon (Si). However, the disclosure is not limited thereto. The silicon content of the second magnet **30** may be changed to cause a change width α of the flux density which is equal to or greater than the critical value required in the standards or by customers.

[0123] For example, the receiving coil **32** and the second magnet **30** may be attached to the back of the shielding member **26** using an adhesive **28**. On the shielding member **26** may be disposed a printed circuit board having electronic parts, including the power source, an AC power generation unit, and a controller mounted thereon.

[0124] The shielding member **26** may shield a magnetic field induced by the coil such that the magnetic field cannot affect the electronic parts, thereby preventing malfunction of the electronic parts.

[0125] FIG. **8** is a block diagram of a wireless power transfer system according to an embodiment.

[0126] Referring to FIGS. **5** to **8**, the wireless power transfer system may include a cradle **10** and a terminal **20**.

[0127] The shapes of the cradle **10** and the terminal **20** were previously described. Hereinafter, circuit components mounted in the cradle **10** and the terminal **20** will be described.

[0128] The cradle **10** may include a power source, an AC power generation unit **19**, a controller **17**, a transmitting coil **14**, a first magnet **12**, and a hall sensor **16**.

[0129] The power source may be the power source shown in FIG. **1**, and the transmitting coil **14** may be the transmitting induction coil and/or the transmitting resonance coil shown in FIG. **1**.

[0130] The power source may generate AC power or DC power. The power source may convert the AC power into first DC power and convert the converted first DC power into second DC power.

[0131] The AC power generation unit **19** may convert power from the power source into AC power under control of the controller **17**. The AC power converted by the AC power generation unit **19** may be transmitted to the terminal **20** through the transmitting coil **14**.

[0132] The controller **17** may control the AC power generation unit **19** based on changes in intensities of flux densities B**1** and B**2** detected by the hall sensor **16**.

[0133] Hereinafter, detection of a voltage signal will be described with reference to FIG. **10**.

[0134] As shown in FIG. **10**, the hall sensor **16** may detect flux density B**1** of the first magnet **12** included in the cradle **10**. In a case in which the terminal **20** is placed on the cradle **10**, the hall sensor **16** may detect flux density B**2** of the second magnet **30** included in the terminal **20**. In the figure, the flux density B**2** of the second magnet **30** is shown as being less than that of the flux density B**1** of the first magnet **12**. Alternatively, the flux density B**2** of the second magnet **30** may be equal to or greater than that of the flux density B**1** of the first magnet **12**.

[0135] The hall sensor **16** may convert the flux density B**1** of the first magnet **12** and the flux density B**2** of the second magnet **30** into electric signals and provide the electric signals to the controller **17**. For example, the electric signals may be voltage signals. However, the disclosure is not limited thereto. For example, a flux density of 1G may be converted into a voltage signal of 5 mV. For example, in a case in which the flux density B**1** of the first magnet **12** is 10G, the hall sensor **16** may convert the flux density B**1**, which is 10G, detected from the first magnet **12** into a voltage signal of 50 mV and provide the converted voltage signal to the controller **17**.

[0136] When there is no terminal **20**, i.e. when the terminal **20** is located at a distance at which the flux density B**2** of the second magnet **30** cannot be sensed by the hall sensor **16**, a first voltage signal S**1** corresponding to the flux density B**1** of the first magnet **12** may be detected.

[0137] When the terminal **20** moves into a sensible section P in which the flux density B**2** of the second magnet **30** of the terminal **20** can be sensed by the hall sensor **16** of the cradle **10**, a second voltage signal S**2** corresponding to the sum of the flux density B**1** of the first magnet **12** and the flux density B**2** of the second magnet **30** may be detected.

[0138] A boundary point between the distance at which the flux density B**2** of the second magnet **30** cannot be sensed and the sensible section P may be defined as an undetectable critical point Q. When the distance between the terminal **20** and the cradle **10** is greater than the undetectable critical point Q, the flux density B**2** of the second magnet **30** cannot be sensed by the hall sensor **16**. When the distance between the terminal **20** and the cradle **10** is less than the undetectable critical point Q, i.e. within the sensible section P, the flux density B**2** of the second magnet **30** can be sensed by the hall sensor **16**.

[0139] The second voltage signal S**2** may linearly increase as the terminal **20** approaches the cradle **10**.

[0140] The second voltage signal S**2** may be saturated at a predetermined point and then have a uniform level. From the predetermined point, the flux density B**2** of the second magnet **30** is maximized. The flux density B**2** of the second magnet **30** may be maximally maintained within a predetermined distance and gradually decrease at greater than the predetermined distance.

[0141] When the terminal **20** approaches the cradle **10** and enters a region in which the flux density B**2** is the maximum, therefore, the second voltage signal S**2** detected by the hall sensor **16** in this region does not increase any longer and is maintained at a uniform level. That is, since the flux density B**2** cannot increase to higher than the maximum although the terminal **20** is placed on the cradle **10**, the second voltage signal S**2** corresponding to the sum of the flux density B**2** of the second magnet **30** and the flux density B**1** of the first magnet **12** may be maintained at a uniform level.

[0142] When the terminal **20** is placed on the cradle **10**, i.e. the distance between the terminal **20** and the cradle **10** is 0, the second voltage signal S**2** corresponding to the flux density B**1** of the first magnet **12** and the flux density B**2** of the second magnet **30** may be detected as a uniform level. In this case, the second voltage signal S**2** may be greater than the first voltage signal S**1**.

[0143] The difference between the second voltage signal S**2** and the first voltage signal S**1** may be defined as a change width α.

[0144] For example, when the change width α between the second voltage signal S**2** and the first voltage signal S**1** is greater than a predetermined critical value, the controller **17** may determine that the terminal **20** is placed on the cradle **10** and control the AC power generation unit **19** to transmit AC power to the terminal **20** through the transmitting coil **14**.

Masimo Ex. 1012
IPR Petition - USP 10,627,783

[0145] The terminal **230** may include a receiving coil **32**, a rectifier **34**, a battery **36**, and a second magnet **30**.

[0146] The receiving coil **32** may be the receiving resonance coil and/or the receiving induction coil shown in FIG. **1**. The battery **36** may be the load shown in FIG. **1**.

[0147] The receiving coil **32** may receive the AC power provided from the transmitting coil **14**.

[0148] The rectifier **34** smoothes the AC power provided from the receiving coil **32**, removes noise from the AC power, and converts the AC power into DC power.

[0149] The terminal **30** may further include a DC-DC converter (not shown) connected between the rectifier **34** and the battery **36** for converting the DC power converted by the rectifier **34** into rated power or rated voltage required by the battery **36**.

[0150] The terminal **20** may communicate with the terminal **10** through in band communication or out of band communication to provide information regarding the increase and decrease in intensity of power required by the terminal **20** and a current charged state of the terminal **20** to the cradle **10**.

[0151] Although not shown, the terminal **20** may further include a management module for sensing the received AC power or the state of the battery **36** such that overpower cannot be supplied to the battery **36** and a controller for controlling the management module and other components.

[0152] FIG. **9** is a flowchart illustrating an operation method of a wireless power transfer system according to an embodiment.

[0153] Referring to FIGS. **8** and **9**, in a case in which the terminal **20** is not placed on the cradle **10**, the controller **17** of the cradle **10** controls the cradle **10** to be operated in a sleep mode in which no AC power is emitted and only a requisite component, such as the hall sensor **16**, is driven to minimize current consumption.

[0154] The controller **17** receives a first voltage signal S**1** corresponding to flux density of the first magnet **12** from the hall sensor **16** through driving of the hall sensor **16**.

[0155] The controller **17** determines whether there is a change of the flux density. That is, the controller **17** determines whether a second voltage signal S**2** greater than the first voltage signal S**1** provided by the hall sensor **16** is provided. As the terminal **20** approaches the cradle **10**, the second voltage signal S**2** detected by the hall sensor **16** may increase. The second voltage signal S**2** may be a signal having flux density B**2** of the second magnet **30** as well as flux density B**1** of the first magnet **12** reflected therein. For example, the second voltage signal S**2** may be converted from the sum of the flux density B**1** of the first magnet **12** and the flux density B**2** of the second magnet **30**. However, the disclosure is not limited thereto.

[0156] The second voltage signal S**2** may increase from the first voltage signal S**1**. As the terminal **20** approaches the cradle **10**, therefore, a change width α between the second voltage signal S**2** and the first voltage signal S**1** may increase as shown in FIG. **10**.

[0157] The controller **17** may determine whether the change width α between the second voltage signal S**2** and the first voltage signal S**1** is equal to or greater than a critical value.

[0158] Upon determining that the change width α is equal to or greater than the critical value, the controller **17** may switch the mode from the sleep mode to a wake-up mode.

[0159] The wake-up mode may be an enabling process for transmitting power to the terminal **20**.

[0160] In the wake-up mode, the controller **17** performs wireless charging. That is, power is provided from the power source under control of the controller **17**. The AC power generation unit **19** may generate AC power from the power of the power source. The generated AC power may be transmitted to the terminal **20** through the transmitting coil **14**.

[0161] Hereinafter, an optimal disposition design structure of the second magnet **30** included in the terminal **20** will be described.

[0162] The receiving coil **32** of the terminal **20** may have a wound coil structure (FIG. **11**) or a lead frame coil structure (FIG. **12**). The receiving coil **32** may be manufactured as a flexible printed circuit board (FPCB). In a case in which the receiving coil **32** is manufactured as the FPCB, the receiving coil **32** may be manufactured to have the same shape as a lead frame coil. The FPCB is a kind of PCB. Since the FPCB is flexible, the FPCB may be three-dimensionally wired and may be reduced in size and weight. Consequently, the FPCB has attracted attention as a material capable of replacing a conventional rigid PCB and has been widely used in small or middle-sized electronic products, such as a mobile phone, a digital camera, a laptop computer, and a camcorder. In addition, the FPCB has been recently applied to various mobile devices, including a smart phone and a tablet PC.

[0163] The greatest difference between a wound coil **32**A and a lead frame coil **32**B is based on presence or absence of pads. That is, the wound coil **32**A has no pad, whereas the lead frame coil **32**B has pads **45** and **47**.

[0164] The wound coil **32**A may be wound from one end **41** by a predetermined number of turns such that the diameter of the coil is gradually decreased and then the other end **43** may be withdrawn near one end **41** of the wound coil **32**A across the number of turns.

[0165] The lead frame coil **32**B may have one end **41** connected to a first pad **45** and the other end **43** connected to a second pad **47**. The lead frame coil **32**B may be wound from one end **41** by a predetermined number of turns such that the diameter of the coil is gradually decreased and then the second pad **47** may be connected to the other end **43**. In this case, the second pad **47** connected to the other end **43** may be disposed in the coil wound by the number of turns.

[0166] As described above, the wound coil **32**A and the lead frame coil **32**B each have an empty central region. The second pad **47** connected to the other end **43** of the lead frame coil **32**B may be disposed in the central region of the lead frame coil **32**B.

[0167] It is assumed that the diameter of the central region of the wound coil **32**A is D**3** and the diameter of the central region of the lead frame coil **32**B is D**4**.

[0168] Since there is no pad in the central region of the wound coil **32**A, a second magnet **30**A may have a diameter D**1** almost equal to the diameter D**3** of the central region of the wound coil **32**A.

[0169] On the other hand, since the second pad **47** is disposed in the central region of the lead frame coil **32**B, a second magnet **30**B may have a diameter D**2** less than the diameter D**4** of the central region of the lead frame coil **32**B.

[0170] Consequently, the diameter D**1** of the second magnet **30**A disposed in the central region of the wound coil **32**A may be greater than the diameter D**2** of the second magnet **30**B disposed in the central region of the lead frame coil **32**B.

[0171] FIG. **13** is a view showing flux density based on disposition of the second magnet in the lead frame coil structure.

Masimo Ex. 1012
IPR Petition - USP 10,627,783

[0172] Samples as shown in Table 1 are used for experiments. The thickness of the second magnet **30**B is 150 mm.

TABLE 1

Sample	Thickness of back cover 24 [mm]	Diameter/Area of second magnet 30B [mm/mm^2]	A ratio of area of second magnet 30B to available area [%]
#1	0.5	8/50	44
#2	0.6	8/50	44
#3	0.7	8/50	44
#4	0.8	9/64	56
#5	0.5	11/95	84
#6	0.6	11/95	84
#7	0.7	12/113	100
#8	0.8	12/113	100

[0173] The available area, which is an area in which the second magnet **30**B may be disposed, may vary depending upon whether the pad is disposed in the central region. Since the second pad **47** is disposed in the center region of the lead frame coil structure, whereas the second pad **47** is not disposed in the center region of the wound coil structure, the available area of the lead frame coil structure may be less than that of the wound coil structure. In this case, when the second magnet **30**B having the same diameter is disposed, a ratio of the area of the second magnet **30**B to the available area in the lead frame coil structure is greater than that in the wound coil structure.

[0174] In FIG. **13**, X**1** to X**5** indicate diameters of the second magnet **30**B. X**1** indicates that the diameter of the second magnet **30**B is 8 mm, and X**2** indicates that the diameter of the second magnet **30**B is 9 mm. In addition, X**3** indicates that the diameter of the second magnet **30**B is 10 mm, X**4** indicates that the diameter of the second magnet **30**B is 11 mm, and X**5** indicates that the diameter of the second magnet **30**B is 12 mm.

[0175] A horizontal axis indicates the thickness of the back cover **24** of the terminal **20**, and a vertical axis indicates a voltage value converted from the flux density B**2** of the second magnet **30**B. The voltage value may be calculated by multiplying the flux density B**2** of the second magnet **30**B by **5**. For example, in a case in which the flux density B**2** of the second magnet **30**B is 30G, the voltage value may be 150 mV.

[0176] In FIG. **13**, A**1**, which is a preferable voltage value required in the standards, is 200 mV, and A**2**, which is a recommended voltage value required in the standards, is 160 mV. In order to obtain a preferable voltage value of 200 mV, it is necessary for the second magnet **30**B to have a flux density B**2** of 40G. In order to obtain a recommended voltage value of 160 mV, it is necessary for the second magnet **30**B to have a flux density B**2** of 32G.

[0177] In order to satisfy the standards, it is necessary to dispose the second magnet **30**B such that the second magnet **30**B has the recommended voltage value (160 mV) or more.

[0178] As shown in FIG. **13**, in a case in which the back cover **24** has a thickness of 0.5 mm to 0.8 mm, the second magnet **30**B has a voltage value of more than 160 mV.

[0179] In addition, in a case in which the back cover **24** has a thickness of 0.5 mm to 0.7 mm, the second magnet **30**B has a voltage value of more than 160 mV when the second magnet **30**B has a diameter of 8 mm to 12 mm.

[0180] In a case in which the back cover **24** has a thickness of 0.8 mm, the second magnet **30**B has a voltage value of more than 160 mV when the second magnet **30**B has a diameter of 9 mm to 12 mm. However, the second magnet **30**B has a voltage value of less than 160 mV when the second magnet **30**B has a diameter of 8 mm.

[0181] When the second magnet **30**B has a diameter of 12 mm or more, the flux density B**2** of the second magnet **30**B may increase much more. However, as the diameter of the second magnet **30**B increases, power receiving efficiency may decrease. That is, power receiving efficiency may be improved only when power transmitted from the cradle **10** is efficiently received. On the other hand, as the diameter of the second magnet **30**B increases, flux density increases. However, the increasing flux density disturbs generation of current due to the receiving coil **32**B of the terminal **20**. As a result, the terminal **230** may not efficiently receive power from the cradle **10**.

[0182] In a case in which the power receiving efficiency of the terminal **20** is guaranteed, therefore, the second magnet **30**B may have a diameter of 12 mm or more. Even in this case, the maximum diameter of the second magnet **30**B cannot exceed the diameter obtained based on the available area. For example, on the assumption that the available area is 130 mm^2, a radius r is 6.43 mm since the available area is $3.14r^2$. Consequently, the available area may have a diameter D of 12.86 mm since D=2r.

[0183] If the power receiving efficiency of the terminal **20** is not guaranteed, the second magnet **30**B may have a diameter of less than 12 mm.

[0184] Meanwhile, Table 2 shows disposition standards of the second magnet **30**A in the wound coil structure.

TABLE 2

Sample	Thickness of back cover 24 [mm]	Diameter/Area of second magnet 30A [mm/mm^2]	A ratio of area of second magnet 30A to available area [%]
#1	0.5	8/50	22
#2	0.6	8/50	22
#3	0.7	8/50	22
#4	0.8	9/64	28
#5	0.5	11/95	42
#6	0.6	11/95	42
#7	0.7	12/113	50
#8	0.8	12/113	50

[0185] As shown in Table 2, the disposition standards of the second magnet **30**A in the wound coil structure are identical to those of the second magnet **30**B in the lead frame coil structure. As previously described, however, no pad is disposed in the central region of the wound coil **32**A since the wound coil **32**A has no pad. As a result, the central region of the wound coil **32**A may be utilized only as a disposition space for the second magnet **30**A. Consequently, the entirety of the central region of the wound coil **32**A may be an available area. For this reason, a ratio of the area of the second magnet **30**A to the available area in the wound coil structure is less than that in the lead frame coil structure. For example, as shown in Table 1, a ratio of the area of the second magnet **30**B to the available area in the lead frame coil structure is 44% to 100%, whereas, as shown in Table 2, a ratio of the area of the second magnet **30**A to the available area in the wound coil structure is 22% to 50%.

[0186] Although Table 2 does not show experimental data on the flux density B**2** of the second magnet **30**A in the wound coil structure, it is sufficiently expected that the flux density B**2** of the second magnet **30**A in the wound coil structure may

Masimo Ex. 1012
IPR Petition - USP 10,627,783

show a tendency similar to the flux density B2 of the second magnet **30**B in the lead frame coil structure.

[0187] FIG. **14** is a view illustrating a polarity arrangement method of permanent magnets provided in a wireless power transmitting apparatus and a wireless power receiving apparatus according to an embodiment.

[0188] Permanent magnets having polarities (N pole and S pole) may be used as the magnets according to this embodiment. Generally, provision of magnetic force to one surface of a permanent magnet such that one surface of the permanent magnet has a specific polarity is called magnetization. When magnets are disposed in a state in which the same polarities of the magnets face each other, repulsive force is generated between the magnets. On the other hand, when magnets are disposed in a state in which opposite polarities of the magnets face each other, attractive force is generated between the magnets.

[0189] Referring to FIG. **14**, polarity magnetized at the top of the first magnet **12** provided in the cradle **10** may be different from that magnetized at the bottom of the second magnet **30** of the terminal **20** facing the top of the first magnet **12**. For example, the top of the first magnet **12** may be magnetized as an N pole, and the bottom of the second magnet **30** may be magnetized as an S pole. On the other hand, the top of the first magnet **12** may be magnetized as an S pole, and the bottom of the second magnet **30** may be magnetized as an N pole.

[0190] When the back cover **24** of the terminal **20** is placed on the top of the terminal **10**, therefore, attractive force may be generated between the first magnet **12** and the second magnet **30**.

[0191] When attractive force is generated between the first magnet **12** and the second magnet **30**, a change width α of the flux density sensed by the hall sensor **16** may be higher than when repulsive force is generated between the first magnet **12** and the second magnet **30**. In addition, the distance between the transmitting coil **14** and the receiving coil **32** may be reduced due to the attractive force between the first magnet **12** and the second magnet **30**.

[0192] Consequently, the hall sensor **16** may more rapidly and accurately sense that the terminal **20** is placed on the cradle **10**. In addition, the distance between the transmitting coil and the receiving coil **32** may be reduced due to the attractive force between the first magnet **12** and the second magnet **30**, thereby improving wireless power transfer efficiency.

[0193] In FIG. **14**, the polarities of the first magnet **12** and the second magnet **30** are shown as being magnetized at the top and bottom thereof. However, the disclosure is not limited thereto. In another embodiment, as shown in FIG. **15**, the magnets may be magnetized in various forms.

[0194] FIG. **15** is a view illustrating a magnetization method of magnets applied to a wireless power transmitting apparatus and a wireless power receiving apparatus according to an embodiment.

[0195] Hereinafter, a disk type magnet will be described by way of example. However, the disclosure is not limited thereto. The magnet may be configured to have a polygonal structure, such as a quadrangular shape or a diamond-shaped structure, or a donut structure.

[0196] Referring to FIG. **15**, at least one selected from among a top and bottom magnetization method (**1501**), a sectional and outer circumferential magnetization method (**1502**), a sectional multi-pole magnetization method (**1503**), and an outer circumferential multi-pole magnetization method (**1504**) may be used as a magnetization method according to an embodiment.

[0197] In another embodiment, the magnetization method of the magnet applied to the wireless power transmitting apparatus **200** may be different from that of the magnet applied to the wireless power receiving apparatus **300**. For example, the top and bottom magnetization method (**1501**) may be applied to the magnet included in the wireless power transmitting apparatus **200**, and the sectional and outer circumferential magnetization method (**1502**) may be applied to the magnet included in the wireless power receiving apparatus **300**.

[0198] The top and bottom magnetization method (**1501**) is a method of magnetizing a magnet such that the top and bottom of the magnet have different poles.

[0199] The sectional and outer circumferential magnetization method (**1502**) is a method of magnetizing a magnet such that upper and lower sections and the outer circumference of the magnet have different poles.

[0200] The sectional multi-pole magnetization method (**1503**) is a method of dividing the section of a magnet into a plurality of cells and magnetizing the cells such that neighboring cells have different poles.

[0201] The outer circumferential multi-pole magnetization method (**1504**) is a method of magnetizing the outer circumference of a magnet such that different poles are alternately disposed along the outer circumference of the magnet.

[0202] FIG. **16** is a view illustrating a polarity arrangement method of a first magnet **12** and a second magnet **30** in a case in which a magnet applied to an embodiment is magnetized using a sectional and outer circumferential magnetization method (**1502**).

[0203] Referring to FIG. **16**, the section of the first magnet **12** may be magnetized with a first polarity, and the outer circumference of the first magnet **12** may be magnetized with a second polarity different from the first polarity. On the other hand, the section of the second magnet **30** may be magnetized with the second polarity, and the outer circumference of the second magnet **30** may be magnetized with the first polarity.

[0204] For example, a user may incorrectly place the terminal on the cradle **10** such that a change width α of the flux density sensed by the hall sensor **16** is less than a predetermined critical value. At this time, attractive force may be generated between the first magnet **12** and the second magnet **30** since the polarity of the outer circumference of the first magnet **12** is different from that of the outer circumference of the second magnet **30** and the polarity of the section of the first magnet **12** is different from that of the section of the second magnet **30**. The distance between the first magnet **12** and the second magnet **30** may be reduced due to the generated attractive force. As a result, the change width α of the flux density sensed by the hall sensor **16** may increase to the predetermined critical value or more. In addition, wireless power transfer efficiency may be optimized due to the reduced distance between the first magnet **12** and the second magnet **30**.

[0205] FIG. **17** is a view showing internal components of a wireless power transmitting apparatus according to another embodiment.

[0206] Referring to FIG. **17**, a cradle **10** may include a plurality of hall sensors **1711** to **1713**, first and second vibration modules **1721** and **1722**, and a controller **1730**.

Masimo Ex. 1012
IPR Petition - USP 10,627,783

[0207] In FIG. **17**, first to third hall sensors **1711** to **1713** are shown. However, the disclosure is not limited thereto. In another embodiment, a larger or smaller number of hall sensors may be provided based on the size of the cradle **10** and a method of embodying the cradle **10**.

[0208] In addition, only two vibration modules are shown in FIG. **17**. However, a larger or smaller number of vibration modules may be provided based on the size of the cradle **10** and a method of embodying the cradle **10**.

[0209] In particular, as shown in FIG. **17**, it can be seen that polarities of a first magnet **12** and a second magnet **30** according to this embodiment are arranged to generate attractive force between the magnets.

[0210] The first to third hall sensors **1711** to **1713** may each measure a change width α of flux density and transfer the measured change width α of the flux density to the controller **1730**. At this time, the controller **1730** may determine whether to start wireless power transfer based on the change width α of the flux density measured by each of the first to third hall sensors **1711** to **1713**. In a case in which the change width α of the flux density measured by the second hall sensor **1712** above the first magnet **12** exceeds a predetermined first critical value, the controller **1730** may determine that the terminal **20** is normally placed on the cradle **10** and start wireless power transfer. On the other hand, in a case in which the change width α of the flux density measured by the second hall sensor **1712** is less than the first critical value and the change width α of the flux density measured by the first hall sensor **1711** is equal to or greater than a predetermined second critical value, the controller **1730** may drive the first vibration module **1721** to reduce the distance between the magnets. As the first vibration module **1721** is driven, the terminal **20** having the second magnet **30** may move to the first magnet **12**. Afterward, the change width α of the flux density measured by the second hall sensor **1712** may exceed the first critical value.

[0211] At this time, flux density of a magnetic field generated in the first magnet **12** may be differently measured by the first hall sensor **1711** and the second hall sensor **1712** depending upon the distances from the hall sensors to the first magnet **12**. Consequently, a critical value for a change width α of flux density, which may be used to determine where the terminal is placed on the cradle **10**, may be differently set per hall sensor.

[0212] A critical value for a change width α of flux density per hall sensor may be preset based on a measured value of the flux density according to the distance from the first magnet **12** and the hall sensor in a state in which the terminal **20** is not placed on the cradle **10**.

[0213] In a case in which magnets magnetized with polarities as described above are disposed in the cradle **10** and the terminal **20** of the wireless power transfer system, it is possible to maximize the change width α of the flux density measured by the hall sensor **16** and to minimize the distance between the magnets, thereby improving wireless power transfer efficiency.

[0214] In addition, in a case in which magnets magnetized with polarities as described above are disposed in the cradle **10** and the terminal **20** of the wireless power transfer system, it is possible to use thinner and smaller magnets, thereby reducing the volume of an electronic device equipped with the wireless power transfer system.

[0215] In FIGS. **7**, **14**, and **17**, the hall sensor is shown as being disposed between the first magnet **12** and the top of the cradle **10**. However, the disclosure is not limited thereto. In another embodiment, the hall sensor may be disposed at one side of the first magnet **12** under the first magnet **12** or at one side of the transmitting coil **14** under the transmitting coil **14**.

[0216] In another embodiment, the transmitting coil **14** is wound on the outside of the first magnet **12**. However, the disclosure is not limited thereto. In another embodiment, the first magnet **12** may be disposed at the upper end of the transmitting coil **14**.

[0217] At this time, a predetermined shielding material for minimizing effects of a magnetic field and an electric field may be used between the first magnet **12** and the transmitting coil **14**.

[0218] Hereinafter, kinds of a magnet applicable to embodiments will be described in brief. A permanent magnet applicable to embodiments may include a neodymium (Nd) magnet consisting of neodymium (Nd), iron (Fe), and boron (B), a ferrite (Fe) magnet consisting of manganese (Mn), cobalt (Co), and nickel (Ni), a rubber magnet consisting of ferrite powder and rubber, an alnico magnet using an alloy of aluminum (Al), nickel (Ni), cobalt (Co), and iron (Fe), and a samarium cobalt (Sm—Co) magnet consisting of samarium (Sm), cobalt (Co), and other rare-earth elements.

[0219] The permanent magnet may be manufactured to have various shapes, such as a disk shape, a quadrangular shape, a (circular or quadrangular) countersunk hole shape, a ring shape, a globular shape. In addition, some permanent magnets may be isotropically configured such that magnetic force can be generated from one side of each of the magnets.

[0220] The method according to the embodiments may be manufactured as a program that can be executed by a computer and may be stored in recording media readable by the computer. Examples of the recording media readable by the computer may include a read only memory (ROM), a random access memory (RAM), a compact disc read only memory (CD-ROM), a magnetic tape, a floppy disk, and an optical data storage device. In addition, the recording media readable by the computer may also be realized in the form of a carrier wave (for example, transmission through the Internet).

[0221] The recording media readable by the computer may be distributed to computer systems connected to each other through a network such that a code readable by the computer is stored or executed in a distribution mode. In addition, a functional program, code, and code segments for embodying the above method may be easily reasoned by programmers in the art to which the disclosure pertains.

[0222] As is apparent from the above description, embodiments have the following effects.

[0223] First, embodiments have an effect of providing a wireless power transmitting apparatus capable of effectively sensing a magnetic field of a receiver magnet in a wireless power transfer system.

[0224] Second, embodiments have an effect of providing a wireless power transfer system capable of more effectively sensing a magnetic field of a receiver using polarities of magnets.

[0225] Third, embodiments have an effect of providing a wireless power transfer system capable of optimizing arrangement between a transmitter and a receiver necessary for wireless power transfer using polarities of magnets.

[0226] Fourth, embodiments have an effect of providing a wireless power transfer system capable of vertically and horizontally arranging a transmitting coil of a transmitter and a

Masimo Ex. 1012
IPR Petition - USP 10,627,783

receiving coil of a receiver using polarities of magnets, thereby maximizing wireless power transfer efficiency.

[0227] Fifth, embodiments have an effect of defining polarity arrangement of a magnet provided in a transmitter of a wireless power transfer system, thereby standardizing the structure of a receiver per manufacturer.

[0228] Sixth, embodiments have an effect in which it is possible to use thinner and smaller magnets through polarity arrangement of magnets provided in a transmitter and a receiver of a wireless power transfer system, thereby reducing the volume of an electronic device equipped with the wireless power transfer system.

[0229] Effects obtainable from embodiments may not be limited by the above mentioned effects, and other unmentioned effects can be clearly understood from the following description by those having ordinary skill in the technical field to which the disclosure pertains.

[0230] Although embodiments have been described with reference to a number of illustrative embodiments thereof, it should be understood that numerous other modifications and embodiments can be devised by those skilled in the art that will fall within the spirit and scope of the principles of this disclosure. More particularly, various variations and modifications are possible in the component parts and/or arrangements of the subject combination arrangement within the scope of the disclosure, the drawings and the appended claims. In addition to variations and modifications in the component parts and/or arrangements, alternative uses will also be apparent to those skilled in the art.

What is claimed is:

1. A wireless power transmitting apparatus for wirelessly transmitting power to a wireless power receiving apparatus, the wireless power transmitting apparatus comprising:

a transmitting coil for transmitting the power;

a hall sensor for sensing a change width of flux density caused by the wireless power receiving apparatus; and

a controller for comparing the sensed change width of the flux density with a predetermined critical value determine whether to transmit the power, wherein

magnets provided in the wireless power transmitting apparatus and the wireless power receiving apparatus are disposed such that polarities of the magnets are different from each other at opposite faces thereof.

2. The wireless power transmitting apparatus according to claim **1**, further comprising a first magnet for generating flux density having a predetermined intensity, wherein the critical value is set based on a distance between the first magnet and the hall sensor.

3. The wireless power transmitting apparatus according to claim **2**, wherein the hall sensor comprises at least one hall sensor, and the critical value is differently set based on a distance between each hall sensor and the first magnet.

4. The wireless power transmitting apparatus according to claim **3**, further comprising at least one vibration module for vibrating one side of a top of the wireless power transmitting apparatus, wherein the controller controls driving of the vibration module based on the change width of the flux density measured by the at least one hall sensor.

5. The wireless power transmitting apparatus according to claim **2**, wherein the hall sensor is provided between a top of the wireless power transmitting apparatus and the first magnet.

6. The wireless power transmitting apparatus according to claim **2**, wherein the first magnet is disposed in a central region of the transmitting coil.

7. The wireless power transmitting apparatus according to claim **2**, wherein

the wireless power receiving apparatus comprises a second magnet, and

the hall sensor senses flux density of the first magnet and flux density of the second magnet to calculate the change width of the flux density.

8. The wireless power transmitting apparatus according to claim **2**, wherein the first magnet is a permanent magnet magnetized only at a face thereof opposite to the wireless power receiving apparatus.

9. The wireless power transmitting apparatus according to claim **2**, wherein the first magnet is a permanent magnet magnetized using any one selected from among a top and bottom magnetization method, an outer circumferential magnetization method, a sectional multi-pole magnetization method, and an outer circumferential multi-pole magnetization method.

10. A wireless power receiving apparatus for wirelessly receiving power from a wireless power transmitting apparatus, the wireless power receiving apparatus comprising:

a receiving coil for receiving the power; and

a second magnet for generating flux density having a predetermined intensity at one side of a face thereof opposite to the wireless power transmitting apparatus, wherein

a first magnet provided in the wireless power transmitting apparatus and the second magnet are disposed such that polarities of the magnets are different from each other at opposite faces thereof.

11. The wireless power receiving apparatus according to claim **10**, wherein the second magnet has a flux density of 32G or more.

12. The wireless power receiving apparatus according to claim **10**, wherein each magnet has a diameter of 8 mm to 12 mm.

13. The wireless power receiving apparatus according to claim **10**, wherein the second magnet is a permanent magnet magnetized only at a face thereof opposite to the wireless power transmitting apparatus.

14. The wireless power receiving apparatus according to claim **10**, wherein the second magnet is a permanent magnet magnetized using any one selected from among a top and bottom magnetization method, an outer circumferential magnetization method, a sectional multi-pole magnetization method, and an outer circumferential multi-pole magnetization method.

* * * * *

Masimo Ex. 1012
IPR Petition - USP 10,627,783