US 20050116820A1

(19) United States

(12) Patent Application Publication

(10) Pub. No.: US 2005/0116820 A1

(43) Pub. Date: Jun. 2, 2005

Goldreich

(54) METHOD AND DEVICE FOR MEASURING PHYSIOLOGICAL PARAMETERS AT THE WRIST

(76) Inventor: **Rami Goldreich**, Rosh Ha'ayin (IL)

Correspondence Address:
Martin Moynihan
Anthony Castorina
Suite 207
2001 Jefferson Davis Highway
Arlington, VA 22202 (US)

(21) Appl. No.: **10/497,169**

(22) Filed: **Jun. 9, 2004**

Related U.S. Application Data

(63) Continuation-in-part of application No. 10/006,357, filed on Dec. 10, 2001, now abandoned.

Publication Classification

(51) **Int. Cl.**[7] **G08B 1/08**

(52) **U.S. Cl.** **340/539.12**; 600/300

(57) **ABSTRACT**

A wrist-mounted device for measuring at least one physiological parameter of a subject. The present invention enables such a measurement to preferably be transformed into clinically useful information about the subject. Such information may then optionally be sent to medical personnel, for example at a contact and/or monitoring center, through a gateway device. The gateway device preferably communicates with the wrist-mounted device of the present invention through a wireless communication channel.

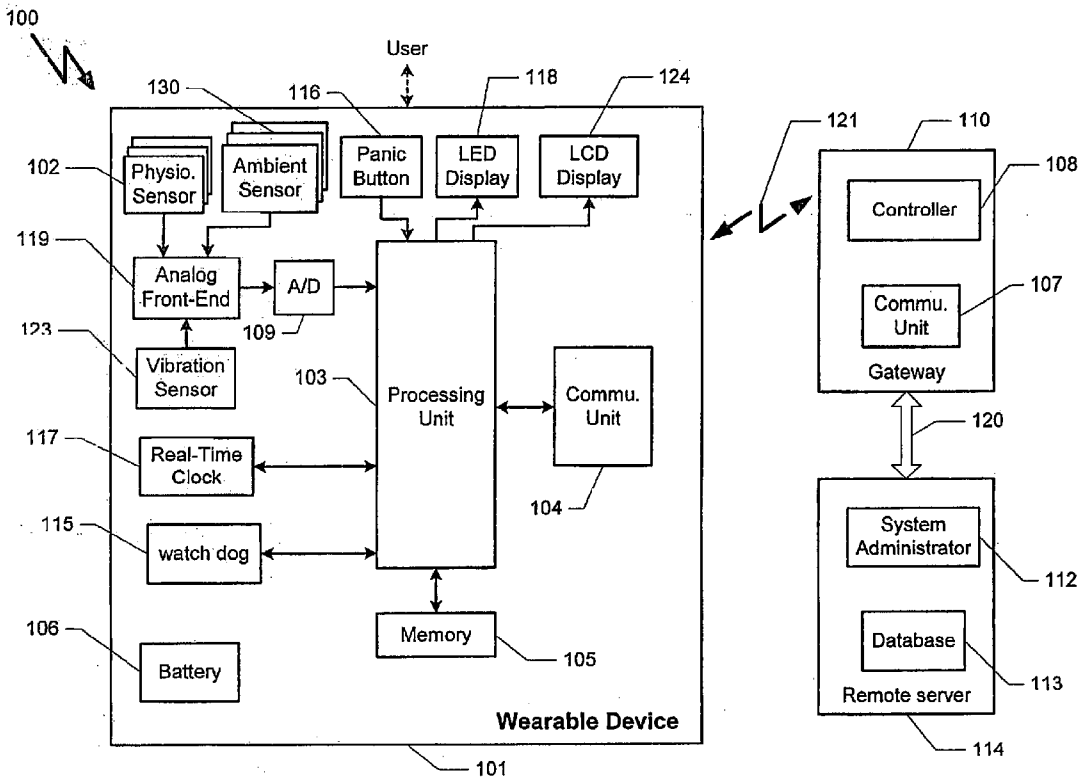

Masimo Ex. 1033
IPR Petition - USP 10,627,783

FIG. 1

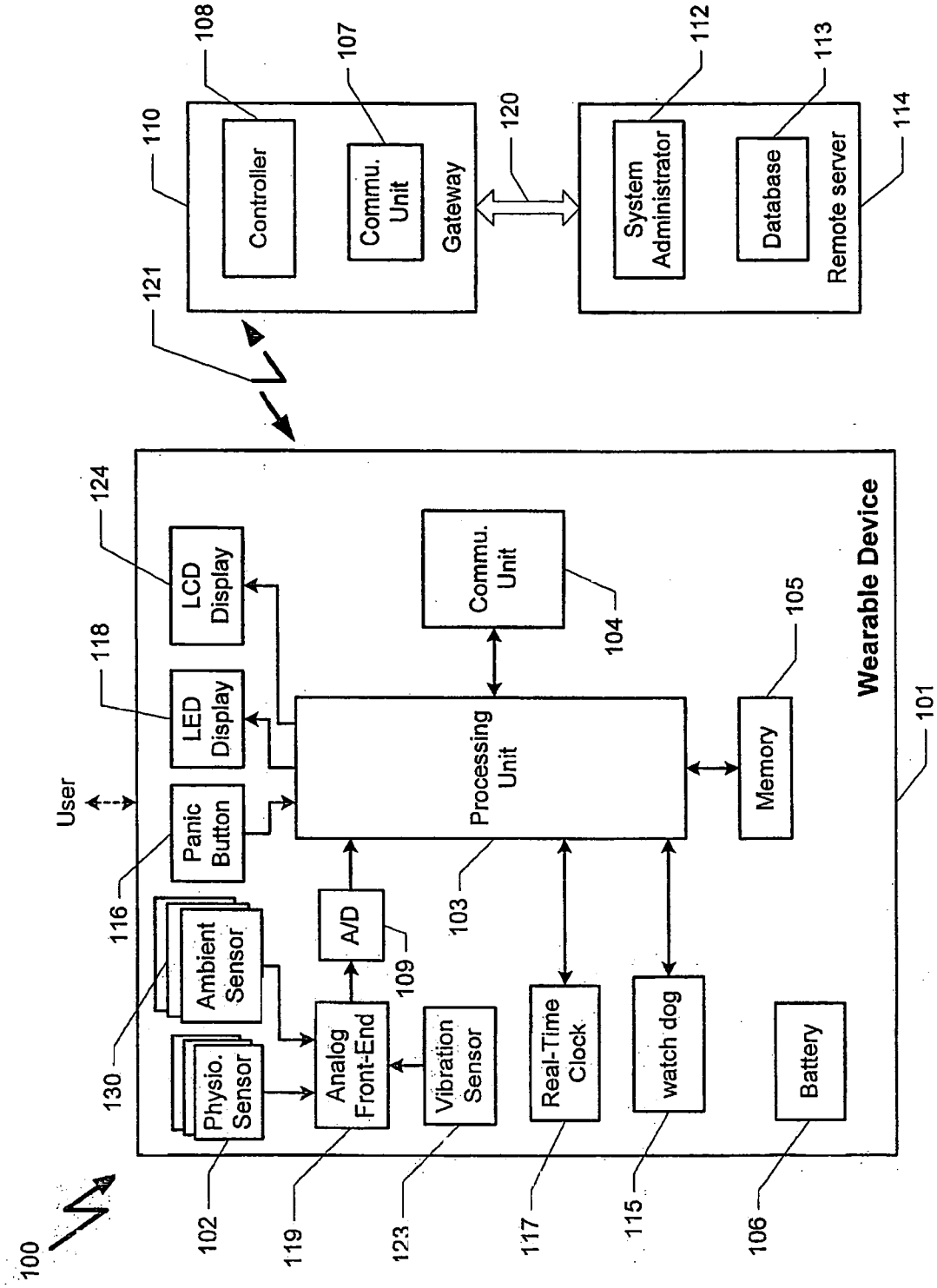

Masimo Ex. 1033
IPR Petition - USP 10,627,783

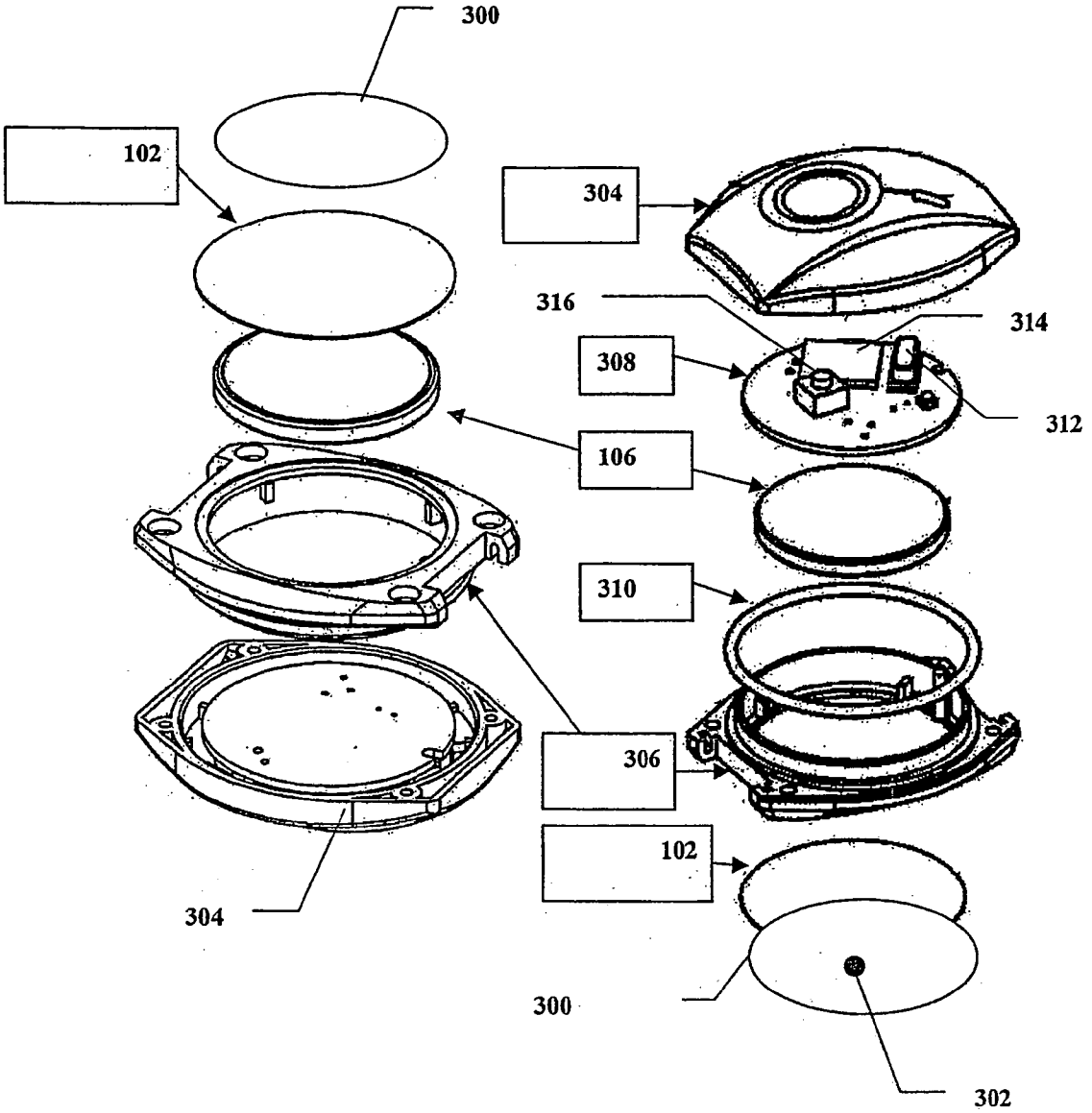

FIG. 2

Masimo Ex. 1033
IPR Petition - USP 10,627,783

FIG. 3

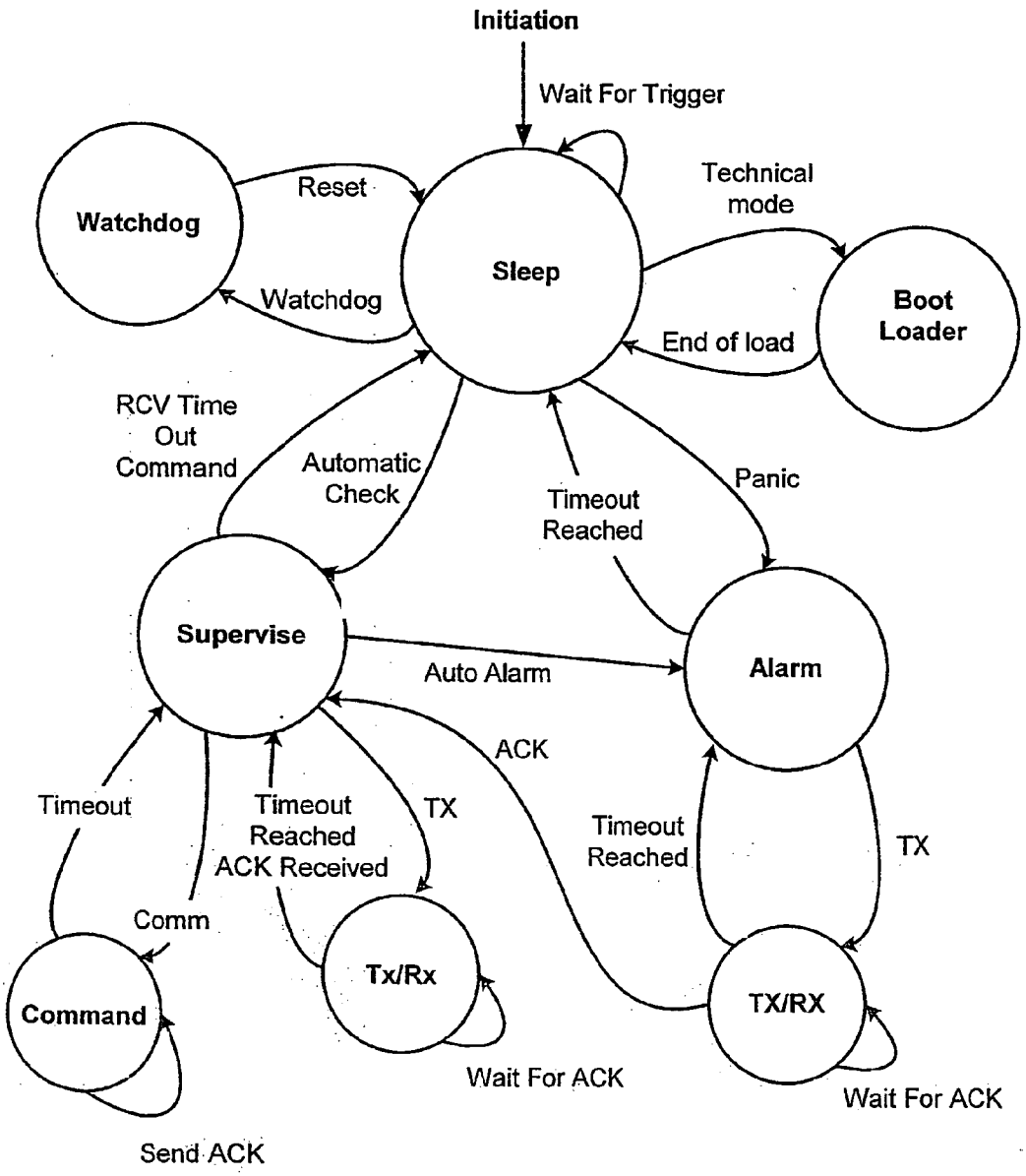

Masimo Ex. 1033
IPR Petition - USP 10,627,783

FIG. 4

STX	Len	Flag	Addr(msb)	Addr(mid)	Addr(lsb)	CMD	Data(0)	...	Data(n)	CRC(msb)	CRC(lsb)	ETX

STX Start of TX indicates the beginning of the message (7E hex).

Len indicates the number of data bytes that the message contains (0 to n + 2 bytes).

Len = 0 – No command.

Len = 1 – command only; the message not include data(0) through data(n)

Len >2 – the message includes command and data.

Flag status bits (1 byte)

Addr the user ID of the bracelet, 24 bits (0 to16777216).

CMD command description.

Data(n) the data of the message.

CRC the CRC (2 bytes) for the message beginning from STX byte to Data(n) byte

ETX End of TX indicates the end of the message (7B hex)

Masimo Ex. 1033
IPR Petition - USP 10,627,783

FIG. 5

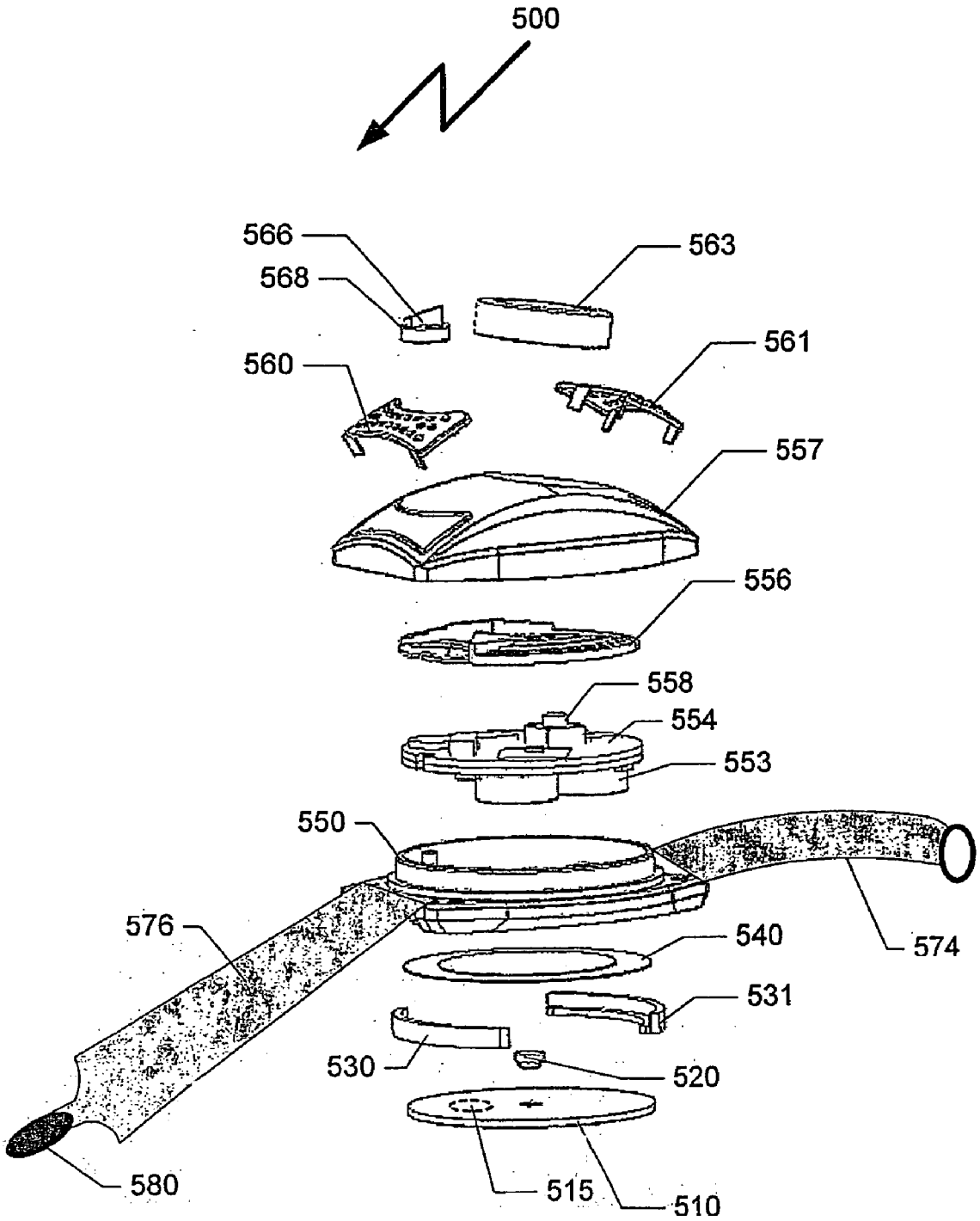
500
566
568
563
561
560
557
556
558
554
553
550
576
540
574
531
530
520
580
515
510

FIG. 6

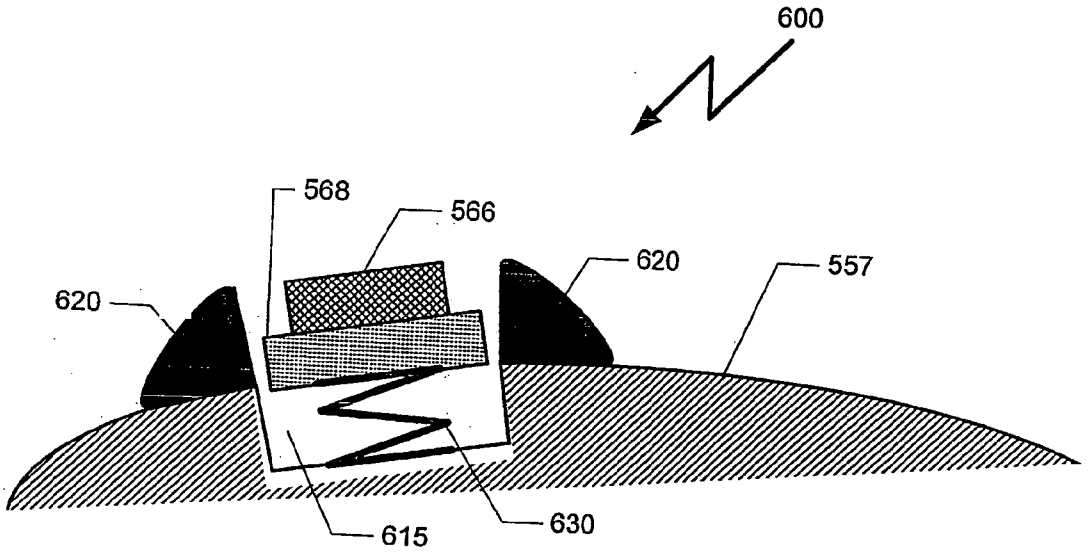

METHOD AND DEVICE FOR MEASURING PHYSIOLOGICAL PARAMETERS AT THE WRIST

CROSS-REFERENCE TO RELATED APPLICATION

[0001] This application claims benefits under 35 U.S.C. § 120 of priority from U.S. patent application Ser. No. 10/006,357 filed Dec. 10, 2001 entitled, "METHOD AND DEVICE FOR MEASURING PHYSIOLOGICAL PARAMETERS AT THE WRIST," the subject matter of which is hereby incorporated by reference.

FIELD OF THE INVENTION

[0002] The present invention is of a method and device for measuring at least one physiological parameter of a subject at the wrist, preferably for extracting clinically useful information thereof. More specifically, the present invention is of a device which may be worn at the wrist of the subject with a strap or other fastening article, and which may then be used to monitor the subject through measurement of the physiological parameter.

BACKGROUND OF THE INVENTION

[0003] Currently, a number of different types of devices are available for monitoring human subjects in a non-invasive manner. For example, heart function can be monitored in a user through the use of electrodes, which must be attached to the skin of the user. Although non-invasive, such equipment is nevertheless uncomfortable for the user, who is attached to a network of cables and wired sensors. In addition, such equipment is very expensive, limiting its use to hospitals and other medical settings in which both the cost and the discomfort of the patient can be justified. Furthermore, patients may become anxious when examined by medical personnel, thereby significantly altering the normal readings for these patients. It should be noted that the terms "subject", "patient" and "user" are used interchangeably herein.

[0004] However, there are many different situations in which non-invasive monitoring of a human subject is desired. For example, such monitoring could be very useful as part of the overall health maintenance of the human subject, and could be used in order to detect a deterioration in the physiological condition of the subject before a concomitant deterioration in the health of the subject becomes noticeable. Examples of adverse physiological conditions which could be detected with regular non-invasive monitoring include but are not limited to excessive weight gain or less; arrhythmia and other heart conditions; incipient diabetes in the form of improper glucose metabolism; and loss of lung capacity or other problems with respiration.

[0005] Heart rate and blood pressure are important factors in determining the state of a person's health and the physical condition of a person's body in response to physical or emotional stress. Periodic monitoring of these physical parameters is particularly important for individuals having cardiac disease and/or lowered cardiac functioning, or high blood pressure. However, physically healthy individuals may also wish to periodically monitor their heart rate and blood pressure in stressful situations, for example when engaging in strenuous exercise.

[0006] In order to support regular monitoring of human subjects in their normal environment, such as in the home and at the office for example, the equipment must be non-invasive and easy to use. The equipment would then be able to monitor at least one physiological parameter of the user, without requiring the user to perform any complicated actions and/or to operate complex devices. Indeed, it would be highly preferred for the equipment to be incorporated as part of the regular daily living routine of the subject, since the requirement for any additional or special actions on the part of human subject is likely to result in decreased compliance. In addition, the equipment should be robust yet inexpensive.

[0007] One example of such a device incorporates a wristband to attach a physiological sensor to the wrist of the subject. Currently, a number of different types of such wristband devices are available, most of which are intended to be used as stand-alone devices to provide information about the subject's own physical condition, mainly for heart rate and blood pressure. Most of these devices obtain such measurements by using an inflating cuff, which is bulky and awkward for the subject.

[0008] Wrist-mounted heart rate monitors are known to the art and have been disclosed, for example, in the patent to Orr et al, U.S. Pat. No. 3,807,388, wherein the duration of a heart beat is measured by counting electrical pulses recurring at a known frequency. The duration of the heartbeat is then related to a particular average heart beat rate. However, the disclosed measurement system does not directly measure the heart rate and, therefore, is subject to inaccuracies of measurement due to the instability of heart beat duration over brief intervals of time.

[0009] A blood pressure measuring device is disclosed in the patent to Petzke et al, U.S. Pat. No. 3,926,179, in which a probe is applied adjacent to the radial artery of a wrist. A pressure-sensitive transducer on the probe generates electrical signals corresponding to the blood pressure pulses of the radial artery. The electrical pulses are applied to analog circuitry that generates a systolic signal corresponding to the integrated voltage at the peak of the electrical pulse signal and a diastolic signal corresponding to the voltage at the low point of the pulse signal. The analog device of Petzke et al requires a substantial amount of power to operate and, therefore, is not suitable for use in a small, compact stand-alone device for being worn on the wrist.

[0010] A blood pressure and a heart rate measuring wrist watch is also disclosed in the patent to Broadwater, U.S. Pat. No. 4,331,154, in which a digital watch is employed to measure systolic and diastolic blood pressure as well as heart rate. The band of the watch supports a piezoelectric transducer that is held in contact with the wrist adjacent to the radial artery when a switch on the band is activated. The absolute values required for this method to evaluate blood pressure cause the device to be subject to inaccurate readings, since the tissues of the hand and wrist may be expected to expand and contract according to such factors as the time of day, and the condition of the external environment such as the atmospheric pressure. Such expansion or contraction may cause different degrees of tension on the wrist-mounted device, which is therefore not suitable for use without daily calibrations.

[0011] Other wrist-mounted devices are for wireless panic alarm systems, mainly for elderly people who live alone.

Masimo Ex. 1033
IPR Petition - USP 10,627,783

These devices are usually shaped as a wristband or a pendant. Whenever the user becomes distressed, the user presses a panic button located on the device. The device then sends a digitally coded wireless message to a gateway device located nearby, usually in the same room, by using a unidirectional wireless data communication link. The gateway device then contacts a manually operated contact center, for example with a land based or cellular telephone connection. A particular identifier for the user is usually sent first, after which the human operator is allowed to talk to the user through a speaker and to listen through a sensitive microphone located within the gateway. However, none of the above systems contains any physiological measurement device within, in order to learn about the current physiological status of the user.

[0012] In such a situation as described above, the operator at the call center learns about the user's condition only by speaking with the user. However, this is only possible if the user is actually able to speak. High levels of background noise may also prevent the user from being heard by the microphone of the gateway device.

SUMMARY OF THE INVENTION

[0013] The background art does not teach or suggest a device which can conveniently, non-intrusively and autonomously measure one or more physiological parameters, in order to extract medical information such as heart rate, breathing rate and blood pressure, and which may be worn on the wrist of the user. The background art also does not teach or suggest such a wrist-mounted device, which can measure such parameters and then send the information to a contact center or other location containing medical personnel. The background art also does not teach or suggest such a wrist-mounted device which is compact, non-invasive, and light.

[0014] The present invention overcomes these deficiencies of the background art by providing a wrist-mounted device for measuring at least one physiological parameter of the user. The present invention enables such a measurement to preferably be transformed into medical information about the user, and/or displays the results on a LCD display. As used herein, the term "physiological parameter" refers to the signal which is received from the sensor, while the term "medical information" refers to the information which may be extracted or otherwise obtained by analyzing this signal and/or a combination of signals. Such information may then optionally be sent to medical personnel (for example at a contact monitoring center) and/or to a remote server, through a gateway device. The gateway device preferably communicates with the wrist-mounted device of the present invention through a wireless communication channel.

[0015] The present invention has the option to display the medical information to the user on a local LCD display, such that the user is optionally and preferably able to read the result locally. Examples of medical information which may be extracted from the measured physiological parameter or parameters include, but are not limited to: heart rate; regularity in heart rate; breathing rate; arrhythmia of the heart (if any), as well as the general rhythm and functioning of the heart; blood pressure; presence of abnormal body movements such as convulsions for example; body position; general body movements; body temperature; presence and level of sweat; oxygen saturation in the blood; and glucose levels in the blood.

[0016] In addition to the physiological parameters, the present invention may measure other parameters that may affect the subject's physical condition, including but not limited to ambient temperature and humidity, lighting conditions, smoke or other material in the air, distance from home etc.

[0017] Optionally and more preferably, the present invention also features an alarm signal for being transmitted through the gateway device in order to indicate an emergency or otherwise dangerous situation for the user. The alarm signal may optionally be transmitted according to a manual action of the user, such as pressing a "panic button" for example.

[0018] Upon receipt of the manually activated alarm signal, the gateway would preferably initiate immediately a call to a human operated call center. Then the device would preferably automatically collect one or more current measurements of physiological parameters of the user. These measurements may be sent directly to the gateway, or alternatively may be analyzed in order to compute the medical information of the user before sending the results to the gateway. The human operator would then preferably be able to assess the user's medical condition from the received information.

[0019] Most preferably, the alarm signal is transmitted automatically upon measurement of one or more physiological parameters of the user, even if the user is unable to press the panic button. Optionally, the alarm signal may be given to the user, additionally or alternatively, for example by sounding an audible alarm, more preferably from the wrist-mounted device itself.

[0020] The device of the present invention also monitors, at least periodically or continuously, one or more physiological parameters of the user. Continuous monitoring would more easily enable the device to transmit the alarm signal if one or more physiological parameters are determined to be outside of predefined criteria, which may represent such medical information as unstable or excessive heart rate, or very high or low blood pressure.

[0021] According to an exemplary embodiment of the present invention, the wrist-mounted device features one or more sensors attached to a wristband or other fastening article. The sensor(s) may optionally be connected to a microprocessor, optionally by a wire but alternatively through a wireless connection. The microprocessor may optionally also be located within the wristband, or otherwise attached to the wristband. The sensor(s) may optionally support automatic collection of the measurement of the at least one physiological parameter, while the microprocessor is able to execute one or more instructions for extracting medical information about the user from such measurement(s).

[0022] The microprocessor more preferably operates a software program to process and analyze the data which is collected, in order to compute medical information. The extracted information, optionally also with the raw data, is then preferably transferred to the previously described gateway device. The gateway device may optionally relay such information to a remote server, which more preferably is able to provide such information to medical personnel, for example as part of a contact center. Therefore, continuous

Masimo Ex. 1033
IPR Petition - USP 10,627,783

monitoring of the medical information and/or physiological parameters of the user may optionally and more preferably be made, enabling better medical care for the user. According to the present invention there is provided a device for measuring at least one physiological parameter of a subject, comprising: (a) a fastening article for being fastened to a wrist of the user; (b) at least one sensor for measuring at least one physiological function of the user, the sensor may be in contact with at least a portion of the wrist and the sensor being attached to the fastening article; and (c) a processor for receiving a signal from the sensor and for converting at least one measurement to form the at least one physiological parameter. Optionally, the data may be stored on a non-volatile memory for being downloaded later by the user or by an operator.

[**0023**] According to another embodiment of the present invention, there is provided a system for measuring at least one physiological parameter of a subject, comprising: (a) a device for measuring the at least one physiological parameter, comprising: (i) a fastening article for being fastened to a wrist of the user; (ii) a sensor for measuring at least one physiological parameter of the user, the sensor being in contact with at least a portion of the wrist and the sensor being attached to the fastening article; (iii) a communication unit for at least transmitting data; and (b) a gateway device for receiving the transmitted data for being monitored.

[**0024**] According to another embodiment of the present invention, there is provided a method for monitoring a physiological parameter of a user, comprising: providing a device for monitoring the physiological parameter, the device being attached to at least a portion of the user at a pulse point of the user; monitoring the physiological parameter through the pulse point; and if a level of the physiological parameter of the user is outside of an expected range, transmitting an alarm.

[**0025**] According to still another embodiment of the present invention, there is provided a device for measuring at least one physiological parameter of a subject, comprising: (a) a fastening article for being fastened to a wrist of the user; (b) a piezoceramic sensor for measuring at least one physiological parameter of the user at a pulse point of the wrist and the sensor being attached to the fastening article; and (c) a processor for receiving a signal from the sensor and for converting the at least one measurement to form medical information.

[**0026**] Hereinafter, the term "microprocessor" includes, but is not limited to, general-purpose microprocessor, a DSP, a micro-controller or a special ASIC designed for that purpose.

[**0027**] The method of the present invention could be described as a process for being performed by a data processor, and as such could optionally be implemented as software, hardware or firmware, or a combination thereof. For the present invention, a software application could be written in substantially any suitable programming language, which could easily be selected by one of ordinary skill in the art. The programming language chosen should be compatible with the computational device (computer hardware and operating system) according to which the software application is executed. Examples of suitable programming languages include, but are not limited to, Visual Basic, Assembler, Visual C, standard C, C++ and Java.

BRIEF DESCRIPTION OF THE DRAWINGS

[**0028**] The invention is herein described, by way of example only, with reference to the accompanying drawings, wherein:

[**0029**] **FIG. 1** is a schematic block diagram of a system according to an exemplary embodiment of the present invention;

[**0030**] **FIG. 2** shows an exploded view of an exemplary device;

[**0031**] **FIG. 3** describes a general state flow diagram;

[**0032**] **FIG. 4** describes a bi-directional message format between the device and the gateway;

[**0033**] **FIG. 5** shows an exploded view of an exemplary device with ECG option; and

[**0034**] **FIG. 6** is an exploded view of an exemplary device, which illustrates the installation of a SpO2 sensor.

DESCRIPTION OF THE EXEMPLARY EMBODIMENTS

[**0035**] The present invention is of a wrist-mounted device for measuring at least one physiological parameter of the user. The present invention enables such a measurement to preferably be transformed into medical information about the user. Such information may then optionally be sent to medical personnel (for example at a contact monitoring center) and/or to a remote server, through a gateway device. The gateway device preferably communicates with the wrist-mounted device of the present invention through a wireless communication channel.

[**0036**] Examples of medical information which may be extracted from the measured physiological parameter or parameters include, but are not limited to: heart rate; regularity in heart rate; breathing rate; arrhythmia of the heart (if any), as well as the general rhythm and functioning of the heart; blood pressure; presence of abnormal body movements such as convulsions for example; body position; general body movements; body temperature; presence and level of sweat; oxygen saturation in the blood; and glucose levels in the blood.

[**0037**] Optionally and more preferably, the present invention also features an alarm signal for being transmitted through the gateway device in order to indicate an emergency or otherwise dangerous situation for the user. The alarm signal may optionally be transmitted according to a manual action of the user, such as pressing a "panic button" for example.

[**0038**] Most preferably, the alarm signal is transmitted automatically upon measurement of the one or more physiological parameters of the user, preferably even if the user is unable to press the panic button. Optionally, the alarm signal may be given to the user, additionally or alternatively, for example by sounding an audible alarm, more preferably from the wrist-mounted device itself.

[**0039**] An exemplary embodiment of the present invention may measure also parameters that may affect the subject's physical condition, including but not limited to ambient temperature and humidity, lighting conditions, smoke and/or other material in the air, distance from home etc.

Masimo Ex. 1033
IPR Petition - USP 10,627,783

[0040] Upon receipt of the manually/automatically activated alarm signal, the gateway would preferably initiate immediately a call to a human operated call center. Then the device would preferably automatically collect one or more current physiological measurements of the user. These measurements may be sent directly to the gateway, or alternatively may be analyzed in order to compute the medical parameters of the user before sending the results to the gateway. The gateway may also analyze the measurement, for example when the measurements are transferred directly to the gateway. The human operator, at the medical center, would then preferably be able to assess the user's medical condition from the received information. It should be noted that the terms "medical center" and "call center" are used interchangeably herein.

[0041] The device of the present invention may also monitor, at least periodically but more preferably continuously, the value or condition of one or more physiological parameters of the user. Continuous monitoring would more easily enable the device to transmit the alarm signal if measurements of one or more physiological parameters are collected and analyzed by the microprocessor to form medical information, which then could be determined to be above predefined criteria, such as unstable heart rate, or very high or low blood pressure, for example.

[0042] According to a non-limiting exemplary embodiment of the present invention, the wrist-mounted device features one or more sensors attached to a wristband or other fastening article. The sensor(s) are preferably connected to a microprocessor, optionally by a wire but alternatively through a wireless connection. The microprocessor may optionally also be located within the wristband, or otherwise attached to the wristband. The sensor(s) preferably support automatic collection of at least one physiological measurement; more preferably, the microprocessor is able to execute one or more instructions for extracting clinically useful information about the user from such measurement(s).

[0043] The microprocessor more preferably operates a software program to process and analyze the data which is collected, in order to compute medical information. The extracted medical information, optionally also with the raw data, is then preferably transferred to the previously described gateway device. The gateway device then preferably relays such information to a remote server, which more preferably is able to provide such information to medical personnel, for example as part of a contact center. Therefore, continuous monitoring of the physiological parameters of the user may optionally and more preferably be made, enabling better medical care for the user.

[0044] A general, non-limiting example of suitable methods for measuring the heart rate and/or other heart-related physiological parameters of a subject who is wearing the device according to the present invention may be found in the article "Cuff-less Continuous Monitoring of Beat-To-Beat Blood Pressure Using Sensor Fusion", by Boo-Ho Yang, Yi Zhang and H. Harry Asada—IEEE (also available through http://web.mit.edu/zyi/www/pdf/IEEETrans2000.pdf as of Dec. 9, 2001), hereby incorporated by reference as if fully set forth herein, where systolic and diastolic blood pressure are calculated using the pulse pressure shape per heartbeat. The disclosure does not describe a device which has the functionality according to the present invention, but the disclosed method is generally useful for determining blood pressure from an external measurement of pressure from the pulse through the skin of the subject.

[0045] The principles and operation of a device and method according to the present invention may be better understood with reference to the drawings and the accompanying description.

[0046] Referring now to the drawings, **FIG. 1** is a schematic block diagram of a system according to the present invention. As shown, a system **100** features a wearable device **101** to be worn by a user, preferably as a wrist-mounted device, for example by being attached with a wristband or other fastening article to the wrist of the user. Device **101** features at least one physiological sensor **102** for measuring at least one physiological parameter of the user. The function of an exemplary sensor **102** is described in greater detail below.

[0047] The device **101** may optionally feature a vibration sensor **123**, preferably a piezoceramic sensor, which is not in direct contact with the skin of the user. Sensor **123** measures the movement of the wrist. The output of sensor **123** can be used by a processing unit **103** to capture the movement of the wrist and to recover some noise received by sensor **102**, which is caused by such movement.

[0048] Device **101** may include additional ambient sensors **130** or additional measuring routines for measuring other parameters. For example, device **101** may optionally have a humidity sensor for measuring the ambient humidity. An exemplary humidity sensor may be the Humidity Gauge manufactured by Honeywell.

[0049] In order to support processing of the measured physiological parameter or parameters, processing unit **103** may optionally include internal RAM and non-volatile program memory (not shown). Also processing unit **103** may optionally include an extended data memory **105** located externally to processing unit **103**. Processing unit **103** preferably executes at least one instruction for processing the data obtained by sensor **102**.

[0050] Examples of such processing units **103** include but are not limited to PIC18LC452 by Microchip Technology Inc., which contains 10 channels of 10 bit A/D converters, a 1.5 K bytes of internal RAM and 32 K Bytes of non-volatile program memory.

[0051] Extended memory component **105** is preferably an electrically erasable non-volatile external memory component. Examples of such a memory component include but are not limited to FM24CL64-S (Ramtron, USA), with 64 Kbit of fast access read/write serial memory for storing temporary data related to the sampled physiological parameter.

[0052] Device **101** may optionally feature a real time clock **117** in order to provide an accurate time and date for each measurement, as device **101** can optionally store a few measurements before transmitting such data and/or information to a gateway device **110**, as described in greater detail below. Stored data and/or information may also optionally be used for such applications as reminding the subject to take medication, perform a prescheduled measurement, and so forth. An A/D converter **109** with multiple

Masimo Ex. 1033
IPR Petition - USP 10,627,783

inputs is also optionally and preferably present if sensor **102** is an analog sensor, in order to convert the analog signal to a digital signal.

[**0053**] Device **101** preferably features an internal communication unit **104**, for at least unidirectional, but more preferably bi-directional, communication with gateway device **110**. Gateway device **110** may feature a communication unit **107**. Communication unit **104** may optionally communicate with communication unit **107** through a wire or alternatively through a wireless communication link **121**. According to a non-limiting exemplary embodiment of the present invention, gateway device **110** is located relatively close to the user and hence to device **101**, for example by being located at the user's premises. As a non-limiting example, gateway device **110** could optionally be installed in the home of the user.

[**0054**] Gateway device **110** also optionally and preferably features a controller **108** for controlling functions of gateway device **110**, such as communication with device **101** for example.

[**0055**] Gateway device **110** preferably communicates with a remote server **114** through a data link **120**, which could optionally be a direct dial-up modem connection with DTMF coding or TCP/IP using regular LAN or dial-up modem connection to an ISP, for example. In any case, data link **120** may optionally be a wired or wireless link, for example through a cellular telephone and/or land-based telephone system, or a combination thereof.

[**0056**] Remote server **114** may be controlled by a system administrator **112**, which may be a person (for manual operation) or a software program (for automatic operation), or a combination thereof. Remote server **114** also preferably features a database **113** for storing data received from gateway device **110**.

[**0057**] Device **101** may also feature a manually operated panic alarm button **116** to be manually activated by the user, for example if the user is in distress. Device **101** may also optionally feature a LED display **118**, for example in order to indicate of alert activation or a low battery level.

[**0058**] Physiological sensor **102** is preferably part of a sensor assembly. Without the intention to limit in any way, the following discussion centers on such a physiological sensor **102**, which contains a piezoceramic transducer for generating an electrical signal, having amplitude corresponding to the magnitude of applied pressure. Therefore, if at least a portion of the transducer is located adjacent to, and in physical contact with, an area of the wrist where blood pressure pulses may be detected, the transducer generates electrical pressure pulses corresponding to the detected blood pressure pulses. Each of the electrical pressure pulses preferably defines a maximum voltage over a systolic interval and a minimum voltage over a diastolic interval.

[**0059**] Although a piezoceramic sensor is used as a pressure transducer according to a preferred embodiment of the invention, it should be appreciated that other transducers known to the art may be employed without departing from the spirit of the invention. Examples of such sensors include but are not limited to piezoelectric transducers, resistive strain gauges and pressure sensor made of fiber-optic techniques.

[**0060**] The piezoceramic transducer is desirable for the present invention since the transducer measures the direct effect of the pressure exerted within the radial artery, while other transducers, for example resistive strain gauges, measure secondary effects such as the strain forces that are applied at the surface of the skin due to the expansion of the radial artery. Piezoceramic transducers are also cheaper than piezoelectric transducers but still produce a high-quality signal.

[**0061**] As shown with regard to **FIG. 1**, the analog output of sensor **102** is first preferably treated by an analog front-end **119**, which more preferably contains analog selector to select the appropriate sensor followed by an analog filter (not shown). As a non-limiting example, this analog filter preferably has a cutoff of about 20 Hz, a linear phase response, a flat amplitude response up to 10 Hz and an amplification of about 3 for acquiring the full spectrum of a typical blood pressure pulse. The filtered signal then enters A/D converter **109**.

[**0062**] Processing unit **103** preferably controls the operation of A/D converter **109**. When a physiological measurement is initiated, A/D converter **109** starts sampling the filtered analog signal of sensor **102** from analog front-end **119**, preferably at a rate controlled by processing unit **103**. This rate is optionally and more preferably 80 samples pet second as to over sample the data by a factor of 4 to maintain a good quality sampled signal. A/D converter **109** preferably transfers the analog data into a digital coded word, optionally at resolution of 10 bits per sample, for example.

[**0063**] An exemplary measuring period may be about 30 seconds in which data is gathered at processing unit **103**. Processing unit **103** preferably operates a software program for examining the validity of the sampled data, in order to determine whether the data contains some indications of legitimate physiological data (such as of a blood pressure pulse of an artery) or alternatively whether the data contains only noise or poor readings. In the second case, A/D converter **109** preferably starts sampling the signal again in order to obtain data for measurement. This process preferably continues until the software determines that sufficient valid data has been collected or after a few successive rejections (usually after 3 times).

[**0064**] Then, the software program preferably performs an algorithm for calculating some medical parameters from the sampled data, such as the calculation of systolic and diastolic blood pressure using a method as disclosed in U.S. Pat. No. 4,418,700, which is hereby incorporated by reference as if fully set forth herein.

[**0065**] The calculated parameters are then preferably stored in memory **105**. The data stored in memory **105** is preferably transmitted to gateway device **110** periodically, or alternatively or additionally after manual operation of panic button **116**.

[**0066**] The calculated parameters are also optionally and preferably displayed on a local LCD display **124**, so the user can view the last medical results locally.

[**0067**] More preferably, data for all medical parameters that are sent to remote server **114** are sent according to a security protocol for maintaining the privacy of the user.

Masimo Ex. 1033
IPR Petition - USP 10,627,783

[0068] Furthermore, the software program preferably performs another algorithm for generating an alert if the medical parameters have values beyond or otherwise outside of the normal expected values.

[0069] Although a one-way link from device **101** to gateway device **110** may be used, device **101** preferably features a two-way communication link as shown for link **121**, for establishing more reliable communication with gateway device **110**. Examples of communication units **104**, **107** include but are not limited to an RF401 UHF transceiver (Nordic), which operates in the universal ISM band (433.92 Mhz), an infrared transceiver, and a "Bluetooth" protocol enabled-transceiver operating bi-directionally in the 2.4 GHz band.

[0070] Device **101** preferably has its own unique identifier, stored in non-volatile data storage, more preferably in memory **105**. Each time device **101** sends a wireless message to gateway device **110**, device **101** also preferably sends the unique identifier to gateway device **110**, although optionally the identifier may be sent only periodically, for example once per day. Gateway device **110** also preferably sends a message to a particular device **101** by including the device identifier in the message, thereby specifying which such device should receive the message.

[0071] As previously described device **101** preferably has its own real time clock **117**. For periodic monitoring of the user, real time clock **117** is preferably used to provide a time tag for each set of results. This time tag is very important for continuous monitoring of the user for long periods of time. By examining the data recorded over of the user for long period of time, a change or alteration in the health condition of the user may be detected. Real time clock **117** may optionally be implemented by separate hardware such as RTC8564 (EPSON, US) for example, or alternatively by a software program for operation by processing unit **103**.

[0072] In some embodiments of device **101** the output of real time clock **117** may be displayed on one of displays **118** or **124** for displaying the date and time.

[0073] Device **101** may also optionally feature a watchdog **115**, which monitors the function of device **101**. If the end of a watchdog time period is reached, device **101** is assumed to have a fault in its operation, and a master reset is preferably initiated automatically.

[0074] Device **101** also preferably features a power source such as a battery **106**, which powers device **101**. Examples of suitable batteries include but are not limited to the silver oxide coin battery model 386 (Panasonic, Japan) having 150 mAh in capacity with a pulse burst of 75 mA for a short period of time (about 5 sec for each pulse). Battery **106** optionally and preferably contains enough energy to power the device for more than one year of operation without being replaced.

[0075] **FIG. 2** shows an exploded view of an exemplary device according to **FIG. 1**. As shown, the device features sensor **102**, shown with the preferred but exemplary implementation of a piezoceramic sensor as previously described. The device also optionally and preferably features battery **106**, and a push button **316** (for optional implementation of the panic button of the device of **FIG. 1**). Battery **106** may optionally be replaced with a plurality of smaller batteries (not shown). The device preferably features a processor **314** (which may optionally be similar or identical to the processing unit of the device of **FIG. 1**. The components of the device are preferably held by a case **306**.

[0076] For this exemplary implementation, sensor **102** is in physical contact with an anvil **300** via a protrusion **302**. Protrusion **302** is welded, optionally by a laser, on one side to the center of anvil **300** and on the other side to the center of sensor **102**. Anvil **300** is pressed against the skin of the wrist of the subject (not shown), more preferably at a pulse point. Anvil **300** may optionally be a rigid disk made for example of polymer, or optionally a metal, such as gold plated copper or stainless steel, for example. Of course, any other type of suitable material, or combinations of materials, may also optionally be used. Anvil **300** therefore collects and integrates the pressure waves, which are associated with each pulse of the blood of the subject, from the area below anvil **300**. This pressure is preferably transferred from the center of anvil **300** to the center of sensor **102** via protrusion **302**. Sensor **102** then emits voltage to form a signal, preferably according to a linear output. By using this architecture, the present invention may measure the blood pressure pulse without blocking the blood flow in the artery.

[0077] This signal is then received by processor **314**, which preferably extracts medical information from the measurement of the physiological parameter. Processor **314** optionally and preferably features a crystal oscillator **312**, for stabilizing the internal clock of processor **314**. Processor **314** may communicate with the real time clock of the device (not shown). Also not shown are the extended memory, transceiver (communication unit), A/D converter and analog front end of the device.

[0078] Processor **314**, oscillator **312** and push button **316** are all preferably mounted on a PCB board **308**. PCB board **308** is then preferably sandwiched between battery **106** and a device cover **304**. Device cover **304** preferably features a soft portion, which may be rubber for example, for enabling the user to locate and depress the panic push button through push button **316**.

[0079] An o-ring **310** is preferably used for waterproof sealing between cover **304** and the: case **306** of the device. Anvil **300** then is held between sensor **102** and the skin of the user (not shown), for example.

[0080] According to an alternative implementation of the device of **FIGS. 1 and 2**, sensor **102** and anvil **300** could optionally be located in the wristband for affixing the device to the wrist of the user (not shown).

[0081] **FIG. 3** is a state flow chart of the operation of the device. As the device software begins operation for the first time, the software preferably makes some initializations using default values. Once the device has been initialized, the software preferably triggers a watchdog function shown as a "Watchdog" process, and then enters a sleeping mode for saving battery life, shown as a "Sleep" process.

[0082] If the end of a watchdog time period is reached, the device is assumed to have a fault in its operation, and a master reset is preferably initiated automatically.

[0083] The device is preferably "woken up" according to one of three triggers. First, the device is preferably woken up when the user presses a panic button manually. This process is shown by the "Alarm" state. The device then preferably

Masimo Ex. 1033
IPR Petition - USP 10,627,783

immediately starts a transmission to the gateway device, containing a distress indication and the device identifier. Then the device enters a receiving mode for a few seconds, waiting for acknowledge (ACK) from the gateway device. This process is shown as a "TX/RX" state.

[0084] If the acknowledge message is not received within this period of time a repeated message is initiated. Additional transmissions are initiated, if necessary. However, if after a predefined number of repeated times an acknowledge message is not received, an error message is stored within a log and no more tries are made. More preferably an indication LED starts blinking for a few seconds, optionally with an audible alarm. Then, the process returns to the "Sleep" state.

[0085] After receiving acknowledge, the process turns to "Supervise" state, where the device collects data from its sensors, preferably calculates some medical information concerning the current physiological status of the user. Then, the device turns into "Tx/Rx" state, where the device transmits a message containing the identifier, and the calculated medical parameters. And if the received ACK contains no commands the device returns to the "Sleep" state, otherwise the device does the command and sends an ACK to the gateway. The gateway returns an ACK with another command to continue or without a command to terminate this process. After doing the last command the device returns to the "Sleep" state.

[0086] In the next case where the device exits its "Sleep" state, an external real time clock signals the device to execute an automatic check. Then, the process enters "Supervise" state as discussed in the above paragraph, only that this time for saving battery life, the device initiate the "Tx/Rx" process only once for a few successive times sending all the accumulated data in one transmission. Then, the device preferably enters a "Sleep" state unless the measured parameters exceed a predefined threshold at least once, but preferably for a few successive measurements. In this case, the device initiates an automatic alarm entering the "Alarm" state, if the device has permission to do so, as previously described.

[0087] When a timer for a supervise process has been running or after an alarm, the device preferably exercises an automatic check as described above, and after that initiates a transmission to the gateway device including all the data collected after the last transmission. Then the device preferably waits for acknowledge, preferably repeating the transmission again if not receiving such an acknowledge message. In the acknowledge message, a command for the device can be stored. In such a case the device performs this command and then the device sends an acknowledge message to the gateway device. This process may optionally continue until an acknowledge message without a command is received, after which the device preferably returns to sleep mode.

[0088] In the third case, the device exit "Sleep" mode if of technical reasons a technician wants to change the operation software, the device enters "Boot Loader" state where a new software is loaded "on the fly" without a need to disconnect the batteries.

[0089] Other exemplary embodiment may use additional routines and modes, such as a mode ihat verifies whether the user is in the user's premises for example. This mode is optionally initiated every few minutes and transmit acknowledge to the gateway. The gateway waits for those signals and if in a certain window of time, for example 30 minutes, an acknowledgment has not been received, the gateway calls the medical center and reports that the user is missing.

[0090] **FIG. 4** describes an exemplary message format for exchanging messages between the device and the gateway device. Every message preferably starts with a preamble STX byte (hex 7E), followed by a byte which contains the number of bytes in the current message, and three bytes of address, followed by a command byte and its corresponding data bytes. This is followed by two bytes of CRC and an ETX byte (hex 7B).

[0091] As such, the message is a variable length message with strong error detection and correction method for enhanced communication reliability. Each message optionally and preferably contains a low battery indication, if necessary.

[0092] In case of a unidirectional communication link between the device and the gateway, a repeated message is preferably transmitted for a predefined number of times, such as 20 times for example, after which the device preferably enters a sleeping mode if no answer is received.

[0093] In case of a bi-directional link, for each message sent to the gateway device, an acknowledge message is preferably returned by the gateway device and vise versa. This message may also contain a command for the device encoded in the CMD byte within the message. Commands could optionally include, but are not limited to, one or more of the following:

[0094] 1) Get/Set service type

[0095] 2) Get/Set device ID

[0096] 3) Set interval between successive medical checking

[0097] 4) Set interval between successive supervision transmissions

[0098] 5) Set Time and date

[0099] 6) Set threshold for automatic alerts

[0100] 7) Set device calibration

[0101] Each time the device sends a message to the gateway, the device may optionally contain a Battery OK/Battery Low indication for the battery situation. This signal preferably appears three months before the battery finishes, enough time to ask the user to replace the battery.

[0102] Each time the device sends a supervise-type message to the gateway, the device preferably sends also all the medical data stored in its memory with that message.

[0103] Each time the gateway device sends a command back to the device, the device preferably returns an acknowledge message with a 3 bit message serial number to the gateway device, in order to fulfill a full handshake between the two. If the gateway device does not receive acknowledge from the device within a few seconds, the gateway device preferably sends its transmission message again with the same serial number. The message may even be repeated a

Masimo Ex. 1033
IPR Petition - USP 10,627,783

few times, each time waiting for acknowledge. If acknowledge is not received, a logbook is updated with an error message, and more preferably an indication LED is turned on for error indication.

[0104] **FIG. 5** shows an exploded view of a device **500** according to exemplary embodiments of the present invention. In addition to, or in place of, measuring blood pressure, device **500** may optionally measure other activities of the body including but not limited to ECG, tonus activity, temperature and the SpO2 (oxygen saturation in the blood) value in the blood of the user, for example.

[0105] Device **500** in **FIG. 5** may be similar to an expanded wristwatch in shape, where bottom anvil **510** is the section which lies flat against the wrist. This forms the base of device **500** whose center is lower case **550**. All other components are built onto lower case **550**, culminating at the top with face-plate **557**, upon which are mounted a number of additional components including sensors.

[0106] Sensor **540** is optionally and preferably attached to lower case **550** of device **500** by two arcs **530** and **531**. Each arc **530** and **531** preferably has a vertical portion and a horizontal portion. The horizontal portion is preferably placed between sensor **540** and anvil **510**, and is pressed against lower case **550** holding sensor **540** in place. The vertical portions of arcs **530** and **531** are preferably affixed into an appropriate slot in lower case **550** of device **500**.

[0107] Lower case **550** may optionally have one or more electrical boards **554** and **556** that comprise the electrical circuitry, which is disclosed in conjunction to in **FIG. 1** and or **FIG. 5**, of the device including batteries **553**. A vibration sensor (an accelerometer) may optionally be connected to one of boards **554** or **556**.

[0108] Device **500** is preferably covered by a top cover **557**, that optionally and more preferably has two electrodes **560** and **561**, SpO2 sensor **566** and optionally a single push panic button **558** that is preferably pressed by the user upon commencement of a measurement period, or if the wearer presses panic button **558**.

[0109] Pressing the flexible portion **563** within top cover **557** causes panic button **558** to be pushed, and preferably initiates an automatic process within device **500**. Device **500** preferably checks with gateway **110** (see **FIG. 1**) as to whether the user is already in a conference with the call center. If device **500** is found to be in a conference with the center, then device **500** may optionally start a measuring thread. If the user is not in conference with the call center, then device **500** preferably initiates the panic thread. The panic thread starts by establishing a connection with the call center via gateway **110** (**FIG. 1**). In parallel, device **500** preferably initiates the measuring thread and transmits a set of results to gateway **110**. Gateway **110** optionally and preferably stores those results and upon establishing the connection with the call center, gateway **110** transmits the results to the call center.

[0110] In other embodiments, the panic thread starts upon pressing activation push button **558** for long period of time (e.g. above few seconds, 5, 6 etc.), thereby initiating a call to medical center. In contrast, pressing activation push button **558** for a short period of time, for example shorter than a second, starts an automatic measuring thread. It should be noted that the terms "activation push button", "panic push button", "panic button" or "push button" may be used interchangeably herein.

[0111] The measuring thread optionally and preferably starts by scanning the available sensors **102** for a first sensor **102** that produces a valid signal (see **FIG. 1**). A valid signal is defined as a signal that meets predefined requirements including but not limited to, one or more of the signal amplitude being within a certain range, frequency being within a certain range and so forth. The valid signal is processed by the appropriate analog front-end **119** and processing unit **103** (see **FIG. 1**). The medical information is preferably transferred to gateway **110**, after which device **500** enters into Sleeping mode.

[0112] Upon receiving the awakening signal from a timer within the real time clock, device **500** may inform the user that a measuring process is initiated. Upon terminating the measurements, the results are sent to the remote server **114** (**FIG. 1**) via gateway **110**.

[0113] Two bands **574** and **576** are optionally connected to lower case **550** and are preferably used to fasten the device to the wrist of the user. The long band **576** may optionally have a flexible conductive wire (not shown) which functions as an antenna, and which is connected to the transmitter of the communication unit **104**, inside device **500**, while the far end of long band **576** may comprise temperature sensor **580** connected by pair of wires (not shown) to the internal circuitry, both of which are described in greater detail below.

[0114] Device **500** may optionally be used to measure blood pressure pulse using piezoceramic transducer **540** to generate an electrical signal. The amplitude of the electrical signal from piezoceramic transducer **540** corresponds to the magnitude of pressure applied thereto. Piezoceramic transducer **540** may be a common piezoceramic buzzer, made of PZT material, and may optionally and additionally be used as a common buzzer, which receives the alarm signals from processing unit **103** (see **FIG. 1**) and produces the alarm sound. The alarm sound is generated by forcing voltage over piezoceramic transducer **540**, which then buzzes for the duration of the alarm signal.

[0115] The exemplary sensor for sensing blood pressure pulse preferably comprises three elements: anvil **510**, protrusion **520** and piezoceramic transducer **540**. Protrusion **520** is preferably welded, optionally by a laser, on one side to the center of anvil **510** and on the other side to the center of piezoceramic transducer **540**. Anvil **510** is pressed against the skin of the wrist of the subject (not shown), more preferably at a pulse point. Anvil **510** may optionally be a rigid disk or other structure, made for example of polymer, or optionally a metal, such as gold plated copper or stainless steel, for example. Of course, any other type of suitable material, or combinations of materials, may also optionally be used.

[0116] Anvil **510** therefore collects and integrates the pressure waves, which are associated with each pulse of the blood of the subject, from the area of skin below anvil **510**. This pressure is preferably transferred from the center of anvil **510** to the center of piezoceramic transducer **540** via protrusion **520**. Piezoceramic transducer **540** then emits voltage to form a signal, preferably according to a linear output. Protrusion **520** preferably is able to focus the input pressure, therefore increasing the output signal of piezoceramic transducer **540**.

Masimo Ex. 1033
IPR Petition - USP 10,627,783

[0117] Therefore, if at least a portion of anvil **510** is located adjacent to, and in physical contact with, an area of the wrist where blood pressure pulses may be detected transducer **540** generates electrical pulses corresponding to the detected blood pressure pulses. Each of the electrical pressure pulses preferably defines a maximum voltage over a systolic interval and a minimum voltage over a diastolic interval. The electrical signal from transducer **540** is preferably amplified by analog front end **119** and transferred via A/D converter **109** to processing unit **103** (see **FIG. 1**). Processing unit **103** processes the digital signal and may deliver a plurality of medical information based on the measurement of blood pressure pulse including but not limited to heart rate, regularity in heart rate, breathing rate, arrhythmia of the heart (if any), general rhythm and functioning of the heart as well as the blood pressure amongst others.

[0118] Device **500** optionally and preferably features two conductive areas **560** and **561** at the top. In the bottom part of device **500**, anvil **510** preferably has a conductive area **515**, which preferably sits adjacent to the skin of the user. In some exemplary embodiments, conductive area **515** may cover the whole of anvil **510**, a non-limiting example of which is constructing anvil **510** of metal. Each of conductive areas **560**, **561** and **515** is preferably electronically connected, as one of the sensors **102**, to an analog front-end **119** (**FIG. 1**).

[0119] Conductive areas **560**, **561** and **515** may optionally and preferably be made of metal, polymer coated with a conductive layer or any other conductive material including but not limited to gold plated copper. Conductive areas **560**, **561** and **515** form three electrodes that may be used for measuring electrochemical activity of the user's body (e.g. ECG, or tonus activity). This activity measures the effects of electricity on chemical and biological activities in the body, and is referred to hereinafter as electrochemical activity.

[0120] For optionally measuring ECG, the user has to touch, simultaneously, the two conductive areas **560** and **561** with the user's second hand, for example with two fingers, to form three measuring points including the skin portion, on the first hand, that is adjacent to conductive area **515**. The three electronic signals from conductive areas **560**, **561** and **515**, are transferred to analog front-end **119** (**FIG. 1**). Analog front-end **119** extracts the ECG analog signal from the three signals by using the signal of one electrode as a reference and amplifying the differential voltage between the other two electrodes. The ECG analog signal is then transferred to A/D converter **109** and from there the digital ECG signal is transferred to processing unit **103** (**FIG. 1**). Analyzing the analog signal to extract the ECG signal may be done by electrical circuits that are known in the art.

[0121] Additional medical information may be determined from the ECG signal. For example, information about breathing rate may be processed based on methods that are described in the prior art. An exemplary method is disclosed in the following article: "Derivation of Respiration Signals from Multi lead ECGs". By George B. Moody, Roger G. Mark, Andrea Zoccola and Sara Mantero. This article originally appeared in Computers in Cardiology **1985**, vol. 12 pp. 113-116 (Washington, D.C.: IEEE Computer Society Press), which is hereby incorporated by reference as if fully set forth herein.

[0122] Other medical information that may be produced by processor unit **103** (**FIG. 1**) is the Pulse Wave Transit Time (PWTT), that may be determined by measuring the time delay between the electrical pulse of the heart, measured from the ECG signal and the time of the blood pressure pulse.

[0123] In another exemplary embodiment, A/D converter **109** (see **FIG. 1**) may be integrated into processing unit **103**. Processing unit **103** processes the ECG signal and generates medical information such as, but not limited to, heart rate, regularity in heart rate, breathing rate, arrhythmia of the heart (if any), as well as the general rhythm and functioning of the heart for example. The medical information is then transferred to the call center via gateway **110** (**FIG. 1**).

[0124] Device **500** may optionally be used for measuring the oxygen saturation in the blood (SpO2) by using SpO2 sensor **566**. Sensor **566** optionally and preferably has two light sources, optionally by two LEDs (light Emitting Diode) and a photoelectric detector for example. One of the LEDs emits in the infrared band and the other emits in the red band.

[0125] **FIG. 6** is a system diagram of an exemplary method of placement of SpO2 sensor **566** in faceplate **557** (of device **600**). The two LEDs and the photoelectric detector (not shown here) of SpO2 sensor **566** are optionally installed over platform **568** which is supported by flexible support **630**. Support **630** may optionally be any material which can absorb and exert pressure, including but not limited to a spring, piece of rubber, a sponge, flexible wing and so forth. Support **630** is locked in a niche **615** in faceplate **557**. The edge of niche **615** is optionally and preferably surrounded by material **620**, which is more preferably flexible and opaque. Material **620** may optionally be any flexible opaque substance including but not limited to rubber, sponge, flexible wings and so forth.

[0126] To perform SpO2 measurement, the user presses a finger against sensor **566**, thereby pushing sensor **566** and platform **568** against flexible support **630** in the direction of faceplate **557**. Flexible support **630** absorbs part of the force by moving inside niche **615** and responding to the pressure with a predetermined force, which is a result of the mechanical properties of flexible support **630**. The force is predetermined to as to avoid disturbing the blood flow in the tissue. The skin of the finger (not shown) that surrounds sensor **566** is therefore pressed against flexible opaque material **620**, thereby blocking light creating a dark space around the measuring area which prevents the surrounding light disturbing the measurement process. Upon depression of sensor **566**, processing unit **103** (**FIG. 1**) initiates the SpO2 measuring thread. Processing unit **103** instructs the current drivers in analog front-end **119** (**FIG. 1**), which is associated with sensor **566**, to force current through the LEDs alternately in sensor **566**. The reflected light from the finger is received by the photo detector, which converts the photons into electronic signal. The electronic signal is fed, as one of sensors **102**, to analog front end **119**. Analog front-end **119** processes the analog signal and transfers the processed analog signal to A/D converter **109** (**FIG. 1**). The digital signal is transferred to processing unit **103** (**FIG. 1**), which processes the digital signal and generates the SpO2 figure. This information is then transferred to the call center via gateway **110** (**FIG. 1**).

Masimo Ex. 1033
IPR Petition - USP 10,627,783

[0127] The signal that is collected from the SpO2 sensor may also optionally be used for producing other heart related information. For example, processing the signal that reflects the intensity of the reflected IR light may produce information such as heart rate, PWTT, irregularity of heart rate etc.

[0128] Other exemplary embodiments may have the SpO2 sensor installed instead of the blood pressure pulse sensor (anvil **510**, protrusion **520** and piezoceramic sensor **540**). In this embodiment the reflected light is received from the wrist instead of the finger.

[0129] Returning to **FIG. 5**, device **500** may optionally have a temperature sensor **580** which is installed at the far end of long band **576**. Temperature sensor **580** preferably includes a thermistor located in a metal cup and is connected via two flexible conductive wires (not shown) that run along the band into the lower case of device **500**. The two wires are connected as one of sensors **102** (**FIG. 1**) to analog front-end **119**. Analog front-end **119** converts the changes in the resistance of the thermistor into an electrical signal with magnitude proportional to the temperature of the user. The analog signal is converted into digital signal by A/D Converter **109** and transferred to processing unit **103**. Processing unit **103** converts the digital signal into temperature information and sends this temperature information via gateway **110** to the call center.

[0130] Temperature sensor **580** is preferably installed in a protected solid housing. The solid housing may optionally be made of polymer, metal, gum or any material able to provide the necessary properties.

[0131] To start measuring the temperature of the user device **500** is optionally removed from the user's hand and sensor **580** is preferably pressed against the user's armpit (not shown).

[0132] In the description and claims of the present application, each of the verbs, "comprise""include" and "have", and conjugates thereof, are used to indicate that the object or objects of the verb are not necessarily a complete listing of members, components, elements or parts of the subject or subjects of the verb.

[0133] It will be appreciated that the above descriptions are intended only to serve as examples, and that many other embodiments are possible within the spirit and the scope of the present invention.

1. A device for measuring at least one physiological parameter of a subject, comprising:

(a) a fastening article for being fastened to the subject;

(b) at least one sensor for measuring at least one physiological parameter of the subject;

(c) a processor for receiving a signal from said sensor and for converting said at least one measurement to form medical information; and

(d) a communication unit for at least receiving said medical information from said processor and for at least transmitting said medical information.

2. The device of claim 1, wherein said sensor is an analog sensor, the device further comprising an A/D (analog to digital) converter for receiving an analog signal from said sensor and for converting said analog signal to a digital signal, said digital signal being sent to said processor.

3. The device of claim 2 wherein said analog to digital converter is an integrated as part of said processor.

4. The device of claim 2, wherein a rate of sampling by said A/D converter is determined by said processor.

5. The device of claim 4, wherein said rate of sampling is at least partially determined according to a type of physiological parameter being measured.

6. The device of claim 1, wherein the fastening article is fastened to the subject's wrist and said sensor is in contact with at least a portion of said wrist and said sensor is attached to said fastening article.

7. The device of claim 6, wherein said physiological parameter is heart-related.

8. The device of claim 7, wherein said physiological parameter includes at least one of heart rate and blood pressure and wherein said measurement is performed substantially without blocking the blood flow in the artery.

9. The device of claim 8, wherein said sensor is selected from the group consisting of a piezoceramic transducer, a piezoelectric transducer and a resistive strain gauge.

10. The device of claim 7, wherein said sensor comprises a combination of an anvil, a protrusion and a piezoceramic transducer.

11. The method of claim 10, wherein said transducer generates measurable electrical pulses corresponding to detected blood pressure pulses.

12. The device of claim 7, wherein said physiological parameter includes irregularity in heart rate.

13. The device of claim 7, wherein said physiological parameter includes breathing rate.

14. The device of claim 7, wherein said physiological parameter includes at least one of arrhythmia and overall cardiac rhythm.

15. The device of claim 6, wherein said physiological parameter is electrochemically related.

16. The device of claim 15, wherein said at least one sensor comprises a plurality of sensors.

17. The device of claim 16, wherein said plurality of sensors comprises three separate conductive areas on the surface of said device which are able to measure electrical activity of said subject.

18. The device of claim 17, wherein at least one conductive area comprises an anvil.

19. The device of claim 15, wherein said physiological parameter is an electro cardiogram (ECG).

20. The device of claim 19 whereby said ECG information is extracted from said three conductive areas by using the signal of one electrode as a reference and amplifying the differential voltage between the other two electrodes.

21. The device of claim 17, wherein said physiological parameter is tonus activity.

22. The device of claim 17, wherein said the at least one physiological parameter is selected from a group consisting of heart rate; regularity in heart rate; breathing rate; arrhythmia of the heart, and overall rhythm of the heart.

23. The device of claim 17, wherein said processor extracts the pulse wave transit time information from the ECG signal in view of the blood pressure pulse signal.

24. The device of claim 1, wherein said physiological parameter is oxygen saturation in the blood (SpO2).

25. The device of claim 24, wherein said at least one sensor comprises a SpO2 sensor.

26. The device of claim 25, wherein said SpO2 sensor comprises two light sources and a photoelectric detector.

Masimo Ex. 1033
IPR Petition - USP 10,627,783

27. The device of claim 26, wherein said light sources are LEDs (light emitting diodes).

28. The device of claim 27, wherein one of said light sources emits infrared band light and the other emits red-band light.

29. The device of claim 26, wherein light from said light sources is reflected from the subject onto said photoelectric detector, wherein said photoelectric detector converts said light to an electronic signal processed by said processor.

30. The device of claim 25, further comprising a flexible support for supporting said SpO2 sensor.

31. The device of claim 25, further comprising flexible, opaque material for surrounding said SpO2 sensor.

32. The device of claim 31 wherein said information includes information that is heart related.

33. The device of claim 1, wherein said physiological parameter includes body movements.

34. The device of claim 33, wherein said body movements include presence of abnormal body movements.

35. The device of claim 33, wherein said at least one sensor comprises an accelerometer.

36. The device of claim 1, wherein said physiological parameter includes body temperature.

37. The device of claim 36, wherein said at least one sensor comprises a temperature sensor.

38. The device of claim 36, wherein said temperature sensor is associated with said fastening article and the temperature sensor is communicatively coupled to the processor.

39. The device of claim 38, wherein said temperature sensor is inserted into the armpit of said subject for said temperature measurement.

40. The device of claim 1, further comprising:

(e) a non-volatile memory for storing at least one instruction for execution by said processor.

41. The device of claim 1, wherein said communication unit also transmits a device identifier for uniquely identifying the device.

42. The device of claim 41, wherein said communication unit also receives data.

43. The device of claim 42, wherein said fastening article is a wristband.

44. The device of claim 43, further comprising a wire located at said wristband, wherein said wire is connected to said communication unit as an antenna.

45. A system for measuring at least one physiological parameter of a subject, comprising:

(a) a device for measuring the at least one physiological parameter, comprising:

(i) a fastening article for being fastened to a wrist of the subject;

(ii) a sensor for measuring at least one physiological parameter of the subject, said sensor being in contact with at least a portion of said wrist and said sensor being attached to said fastening article;

(iii) a communication unit for at least transmitting data; and

(b) a gateway device for receiving said transmitted data for being measured.

46. The system of claim 45, further comprising:

(c) a remote server in communication with said gateway device.

47. The system of claim 46, wherein at least one of a communication link between said gateway device and said remote server includes a telephone line.

48. The system of claim 45, wherein said transmitted data is analyzed at least partially automatically by said gateway device.

49. The system of claim 45, wherein said device and said gateway device communicate bi-directionally, such that a message transmitted from said device is acknowledged by said gateway device, and such that if said gateway device does not acknowledge correct reception of said message, said device transmits said message again.

50. The system of claim 45, wherein said device for measuring the at least one physiological parameter further comprises:

(iv) a processor for receiving a signal from said sensor and for converting at least one measurement to form medical information.

51. The system of claim 45, wherein at least one of a communication link between said device and said gateway device is a wireless link.

52. The system of claim 45, wherein at least one of a communication link between said device and said gateway device is a wired link.

53. The system of claim 45, wherein said device automatically performs a measurement of the physiological parameter upon manual activation of the device by the subject.

54. The system of claim 53, wherein said data is automatically transmitted to said gateway device upon said manual activation.

55. The system of claim 45, wherein said device automatically and periodically performs a measurement of the physiological parameter.

56. The system of claim 55, wherein said data is automatically transmitted to said gateway device if said measurement is outside of an acceptable range.

57. The system of claim 56, wherein said measurement is combined with another measurement of at least one other parameter to determine if said measurements are outside of said acceptable range.

58. A method for monitoring a physiological parameter of a subject, comprising:

providing a device for monitoring the physiological parameter, said device being attached to at least a portion of the subject at a pulse point of the subject;

monitoring the physiological parameter through said pulse point; and

if a level of the physiological parameter of the subject is outside of an expected range, transmitting an alarm.

59. A device for measuring at least one physiological parameter of a subject, comprising:

(a) a fastening article for being fastened to a wrist of the subject;

(b) a piezoceramic sensor for measuring at least one physiological parameter of the subject at a pulse point of said wrist and said sensor being attached to said fastening article; and

Masimo Ex. 1033
IPR Petition - USP 10,627,783

(c) a processor for receiving a signal from said sensor and for converting said at least one measurement to form medical information.

60. A device for measuring at least one physiological parameter of a subject, comprising:

(a) an anvil for being pressed against skin of the subject;

(b) a protrusion connected to said anvil, wherein at least one vibration is collected from said anvil by said protrusion;

(c) a piezoceramic transducer for receiving said at least one vibration from said protrusion; and

(d) a processor for receiving a signal from said piezoceramic transducer according to said at least one vibration and for converting said signal to form medical information.

61. The device of claim 60, wherein said anvil is pressed against a pulse point of the subject, and wherein said signal measures pulse rate.

62. The device of claim 60, further comprising:

(e) a non-volatile memory for storing at least one instruction for execution by said processor.

63. The device of claim 60, further comprising:

(f) a communication unit for at least transmitting data.

* * * * *

Masimo Ex. 1033
IPR Petition - USP 10,627,783