Knobbe Martens

Petitioner Masimo Corporation's Demonstratives For Oral Hearing

July 9, 2024

Apple Inc. v. Masimo Corporation

IPR2023-00634

IPR2023-00734

MASIMO 1063
Masimo v. Apple
IPR2023-00634

Topics

Obvious to:

1. Combine optical sensors and wireless charging coil ('491 Cl. 7)
   See also '491 Cl. 14, '783 Cls. 9, 15
2. Measure ECG using electrodes ('491 Cl. 1)
   See also '491 Cls. 13, 17
3. Make cover disk-shaped ('783 Cl. 6)
4. Make disk-shaped cover convex to align with convex dock ('783 Cl. 12)
5. Magnetically couple watch with charging dock ('783 Cl. 16)
6. Make charging coil diameter smaller than biosensor module ('783 Cl. 11)
7. Combine Kotanagi, Honda ('783 Cl. 9, '491 Cl. 7)

Claims Argued in the POR and Reply

’491

- Claim 7
- Claim 14 (same arguments as Claim 7)
- Claims 1, 13, and 17 (claims reciting electrodes)

’783

- Claim 9
- Claims 11, 15, 16, 1, 6, 12

Topics

Obvious to:

1. Combine optical sensors and wireless charging coil ('491 Cl. 7)
   See also '491 Cl. 14, '783 Cls. 9, 15
2. Measure ECG using electrodes ('491 Cl. 1)
   See also '491 Cls. 13, 17
3. Make cover disk larger than opening for water-tight seal ('783 Cl. 6)
4. Use convex cover to align with concave dock ('783 Cl. 12)
5. Magnetically couple watch with charging dock ('783 Cl. 16)
6. Make charging coil diameter smaller than biosensor module ('783 Cl. 11)
7. Combine Kotanagi, Honda ('783 Cl. 9, '491 Cl. 7)

Undisputed: Kotanagi teaches almost all limitations of ’783 and ’491 Patents

Patent:

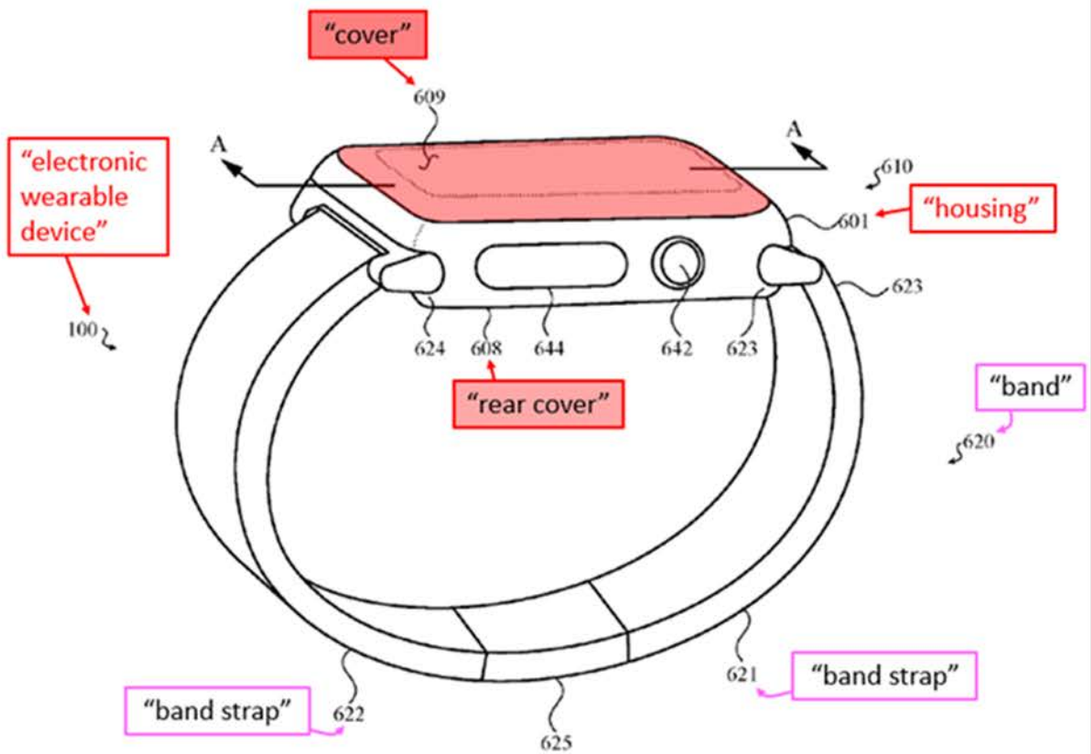

Kotanagi:

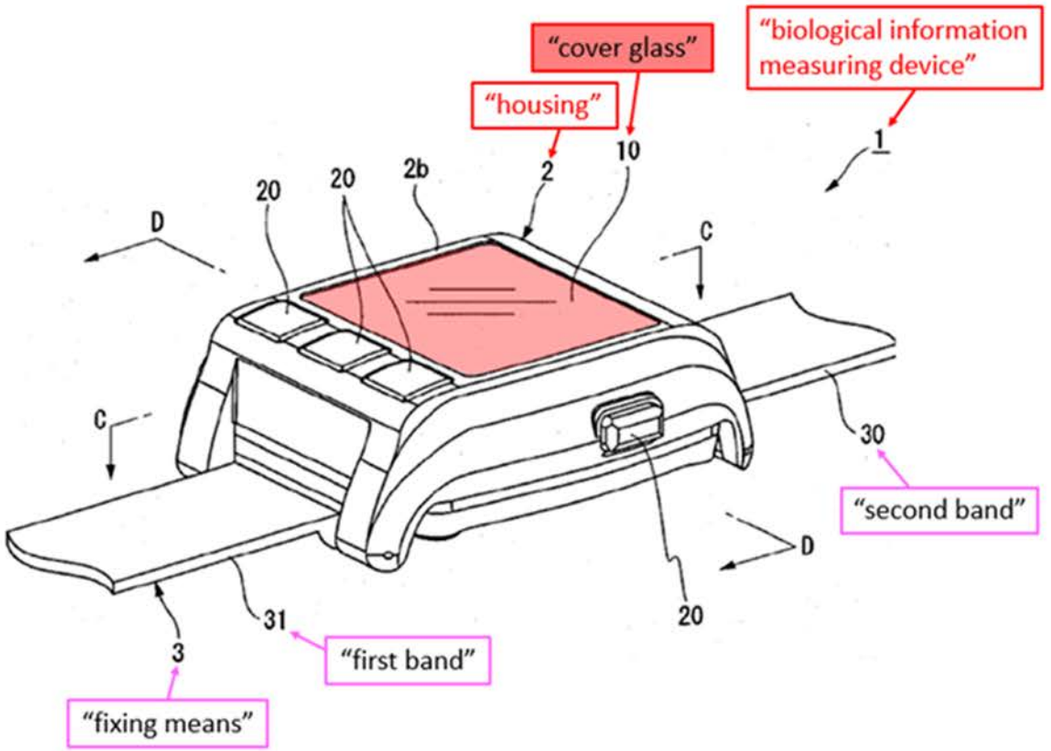

’783 Pet. at 11; *see* EX1001 (Fig. 6); EX1005 (Fig. 4); EX1003 ¶ 34

’491 Pet. at 5; *see* EX1001 (Fig. 6); EX1005 (Fig. 4); EX1003 ¶ 27

Undisputed: Kotanagi teaches almost all limitations of ’783 and ’491 Patents

Patent:

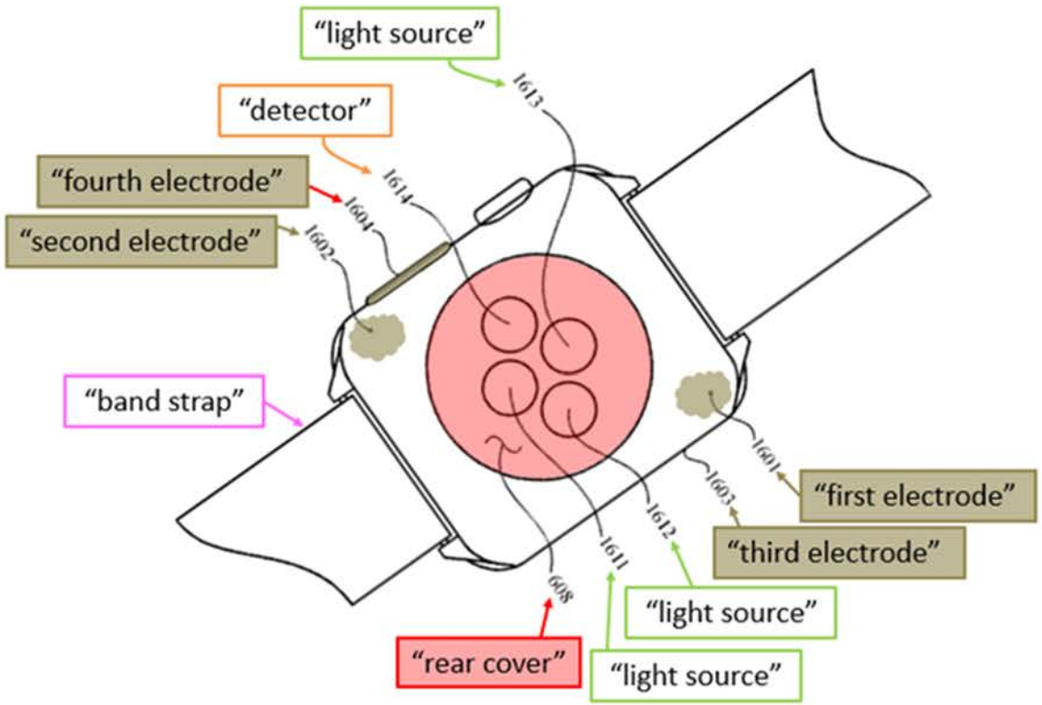

Kotanagi:

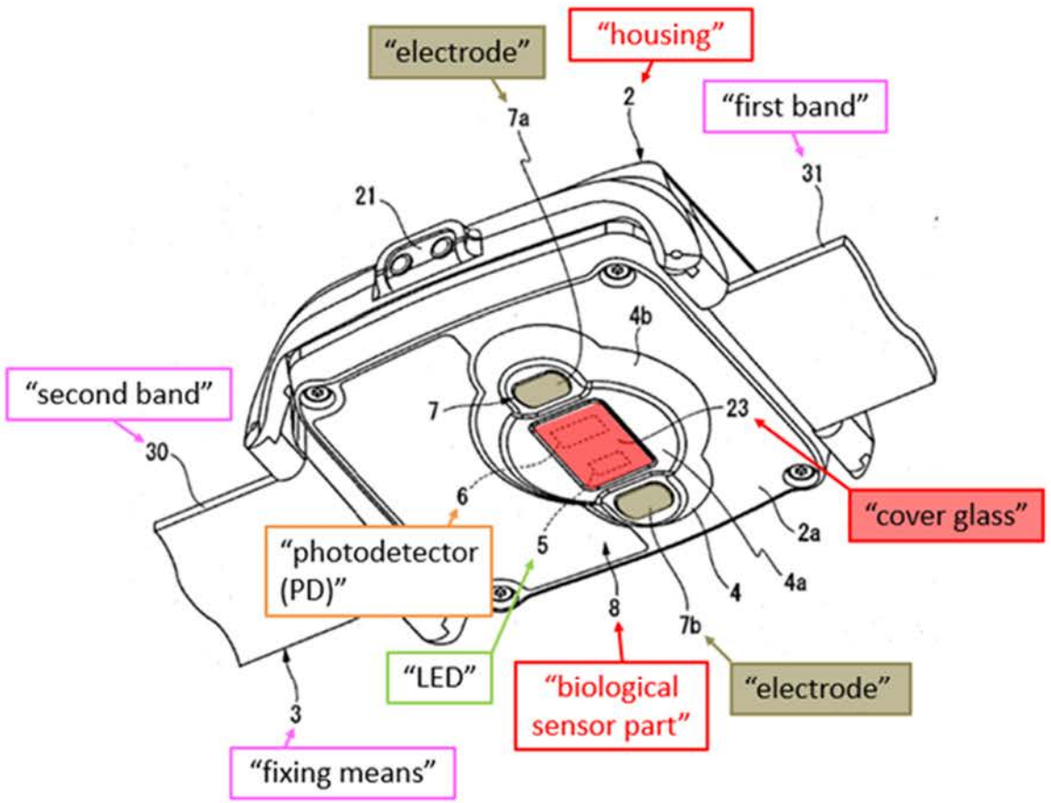

’783 Pet. at 11; *see* EX1001 (Fig. 16); EX1005 (Fig. 5); EX1003 ¶ 34

’491 Pet. at 5; *see* EX1001 (Fig. 16); EX1005 (Fig. 5); EX1003 ¶ 27

Grounds

’783

GROUND 1	Claims 9–11, 15, 19, and 20 are unpatentable as obvious in view of Kotanagi and Honda
GROUND 2	Claim 16 is unpatentable as obvious in view of Kotanagi and Honda, and optionally in further combination with Park
GROUND 3	Claims 1–7 and 14 are unpatentable as obvious in view of Kotanagi and Honda, and optionally in further combination with Kateraas
GROUND 4	Claims 12–13 and 17–18 are unpatentable as obvious in view of Kotanagi and Honda, Jabori, and optionally in further combination with Park
GROUND 5	Claims 3 and 14 are unpatentable as obvious in view of Kotanagi, Honda, Fraser, and optionally in further combination with Kateraas
GROUND 6	Claim 8 is unpatentable because it would have been obvious in view of Kotanagi and Honda, Jabori, and optionally in further combination with Kateraas and/or Park

’491

GROUND 1	Claims 7, 11, 14, and 16 are unpatentable as obvious in view of Kotanagi and Honda
GROUND 2	Claims 1–3, 5, 13, and 17 are unpatentable as obvious in view of Kotanagi, Honda, and Choi
GROUND 3	Claims 8 and 15 are unpatentable as obvious in view of Kotanagi, Honda, and Fraser
GROUND 4	Claim 9 is unpatentable as obvious in view of Kotanagi, Honda, and Orr
GROUND 5	Claims 12 and 18 are unpatentable as obvious in view of Kotanagi, Honda, and Park
GROUND 6	Claim 4 is unpatentable as obvious in view of Kotanagi, Honda, Choi, and Park
GROUND 7	Claims 10 and 19 are unpatentable as obvious in view of Kotanagi, Honda, and Jabori
GROUND 8	Claim 6 is unpatentable as obvious in view of Kotanagi, Honda, Choi, and Jabori

Claim 7 of the ’491 Patent

7. A wearable electronic device comprising:

a housing formed from a conductive material and defining a first opening opposite to a second opening;

a band attached to the housing and configured to secure the wearable electronic device to a user;

a display positioned in the first opening;

a cover comprising a non-conductive material and positioned over the second opening, the cover forming a portion of an exterior surface of the wearable electronic device;

a biosensor module positioned below the cover configured to pass an optical signal through a window defined within the non-conductive material of the cover; and

a wireless charging receive coil aligned with the second opening and below the cover, the wireless charging receive coil configured to inductively couple to an external wireless charging device through the non-conductive material of the cover.

’491 Pet. at 5; *see* EX1001 (Fig. 6);

Disputed: Is it Obvious to Combine

(12) International Application Published Under the Patent Cooperation Treaty

(19) World Intellectual Property Organization
International Bureau

(43) International Publication Date
October 6, 2005 (10.06.2005)

PCT

(10) International Publication Number
WO 2005/092182 A1

(51) International Patent Classification: A61B 5/0245

(21) International Application Number: PCT/JP2005/002021

(22) International Filing Date: February 10, 2005 (02.10.2005)

(25) International Filing Language: Japanese

(26) International Publication Language: Japanese

(30) Priority Data:
Japanese Patent Application 2004-09194 March 26, 2004 (03.26.2004) JP

(71) Applicant: SEIKO INSTRUMENTS INC. [JP/JP]; 1-8 Nakase, Mihama-ku, Chiba-shi, Chiba 2618507 (JP).

(72) Inventors; and
(75) Inventors/Applicants: KOTANAGI, Susumu [JP/JP]; c/o SEIKO INSTRUMENTS INC., 1-8 Nakase, Mihama-ku, Chiba-shi, Chiba 2618507 (JP). NAKAMURA, Takashi [JP/JP]; c/o SEIKO INSTRUMENTS INC., 1-8 Nakase, Mihama-ku, Chiba-shi, Chiba 2618507 (JP). MAEGAWA, Kazuya [JP/JP]; c/o SEIKO INSTRUMENTS INC., 1-8 Nakase, Mihama-ku, Chiba-shi, Chiba 2618507 (JP). MIYAHARA, Shinichiro [JP/JP]; c/o SEIKO INSTRUMENTS INC., 1-8 Nakase, Mihama-ku, Chiba-shi, Chiba 2618507 (JP). MORIYA, Koichi [JP/JP]; c/o SEIKO INSTRUMENTS INC., 1-8 Nakase, Mihama-ku, Chiba-shi, Chiba 2618507 (JP).

/continued overleaf/

(54) TITLE OF THE INVENTION: BIOLOGICAL INFORMATION MEASURING DEVICE

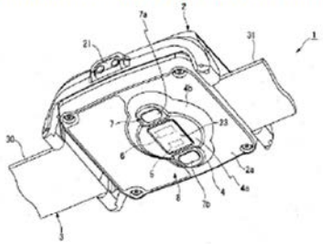

(57) Abstract: A biological information measuring device comprising a biological sensor section including a body, a protrusion formed on the lower surface of the body, a means for fixing the body to an arm while directing the lower surface of the body toward the surface side of a biological object, a light emitting section for irradiating light toward the biological object while touching the surface of the biological object, a light receiving section for receiving reflection light from the biological object out of the light irradiated from the light emitting section and producing biological information signal corresponding to the quantity of received light, and means for detecting whether or not the light emitting section and the light receiving section are in contact with the surface of the biological object, and a section provided in the body and detecting biological information based on the biological information signal, characterized in that the biological sensor section is arranged on the lower surface of the protrusion. The biometric information measuring device can be fixed for a long time without giving an unpleasant feeling while enhancing tightness.

(57) Abstract: A biological information measuring device comprising: a biological sensor part including: a main body; a protruding part formed so as to protrude from the lower surface of the main body; a fixing means for mounting the main body to an arm while directing the lower surface of the main body toward the living body surface side; a light-emitting part for emitting light toward the living body while in contact with the living body surface; a light-receiving part for receiving reflected light from the living body out of the light emitted by the light-emitting part and generating a biological

Kotanagi

(12) **United States Patent**
Honda et al.

(10) Patent No.: US 6,265,789 B1
(45) Date of Patent: Jul. 24, 2001

(54) ELECTRONIC APPARATUS

(75) Inventors: **Katsuyuki Honda**, Shioiiri; **Motomu Hayakawa**, Shiojiri; **Ichiro Aoshima**, Shimosuwa-machi; **Hidetoshi Matsuki**, Sendai, all of (JP)

(73) Assignee: **Seiko Epson Corporation**, Tokyo (JP)

(*) Notice: Subject to any disclaimer, the term of this patent is extended or adjusted under 35 U.S.C. 154(b) by 0 days.

(21) Appl. No.: **09/341,933**

(22) PCT Filed: **Nov. 19, 1998**

(86) PCT No.: **PCT/JP98/05221**
§ 371 Date: **Sep. 10, 1999**
§ 102(e) Date: **Sep. 10, 1999**

(87) PCT Pub. No.: **WO99/27603**
PCT Pub. Date: **Jun. 3, 1999**

(30) **Foreign Application Priority Data**

Nov. 20, 1997 (JP) 9-319723
Mar. 31, 1998 (JP) 10-085774

(51) **Int. Cl.**[7] **H01M 10/46**

(52) **U.S. Cl.** **307/33**; 307/106

(58) **Field of Search** 307/104, 33

(56) **References Cited**

U.S. PATENT DOCUMENTS

5,070,293	*	12/1991	Ishii et al.	320/2
5,455,467	*	10/1995	Young et al.	307/104
5,550,452	*	8/1996	Shirai et al.	320/2
5,920,131	*	7/1999	Platt et al.	307/104
5,923,544	*	7/1999	Urano	307/104
5,929,598	*	7/1999	Nakama et al.	320/108
5,949,155	*	9/1999	Tamura et al.	307/107

FOREIGN PATENT DOCUMENTS

60-8636	1/1985	(JP) .
6-24356	3/1994	(JP) .
8-79976	3/1996	(JP) .
9-330838	12/1997	(JP) .

* cited by examiner

Primary Examiner—Fritz Fleming

(57) **ABSTRACT**

In at least two separated devices, a data transmission or a power transmission is performed through the electromagnetic coupling of coils which are arranged in mutually facing positions in the respective devices. In order to reduce the effect of a displacement between two coils even if the two coils are displaced from each other, the inner diameter of a coil **110** on the side of a station, as a primary coil, for performing the data transmission or the power transmission, is set to be larger than the inner diameter of a coil **210** on a watch side, as a secondary coil, by at least 1 mm.

17 Claims, 16 Drawing Sheets

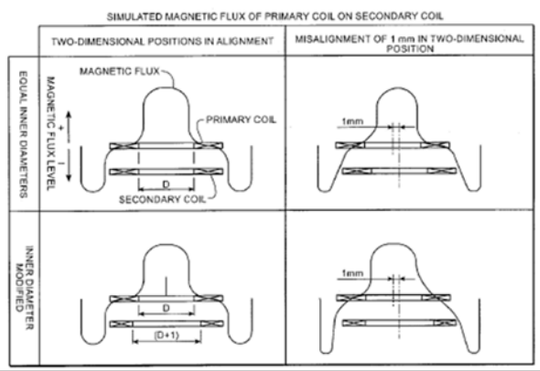

Honda

Kotanagi's Contactless Charging

"[A] **transformer** or the like for supplying power to a recharger and to the inside of the housing 2 may be provided so as to recharge the rechargeable battery 13 **in a contactless state**."

'783 Pet. at 22, 25, 28, 31;
EX1005 ¶ 53 (emphasis added)

'491 Pet. at 22, 25, 28;
EX1005 ¶ 53 (emphasis added)

Contactless Charging is Wireless Charging

Dr. Duckworth:

> "A POSITA would have known . . . that . . . such contactless charging involves a wireless charging receive coil."

Honda Discloses Wireless Charging Coils

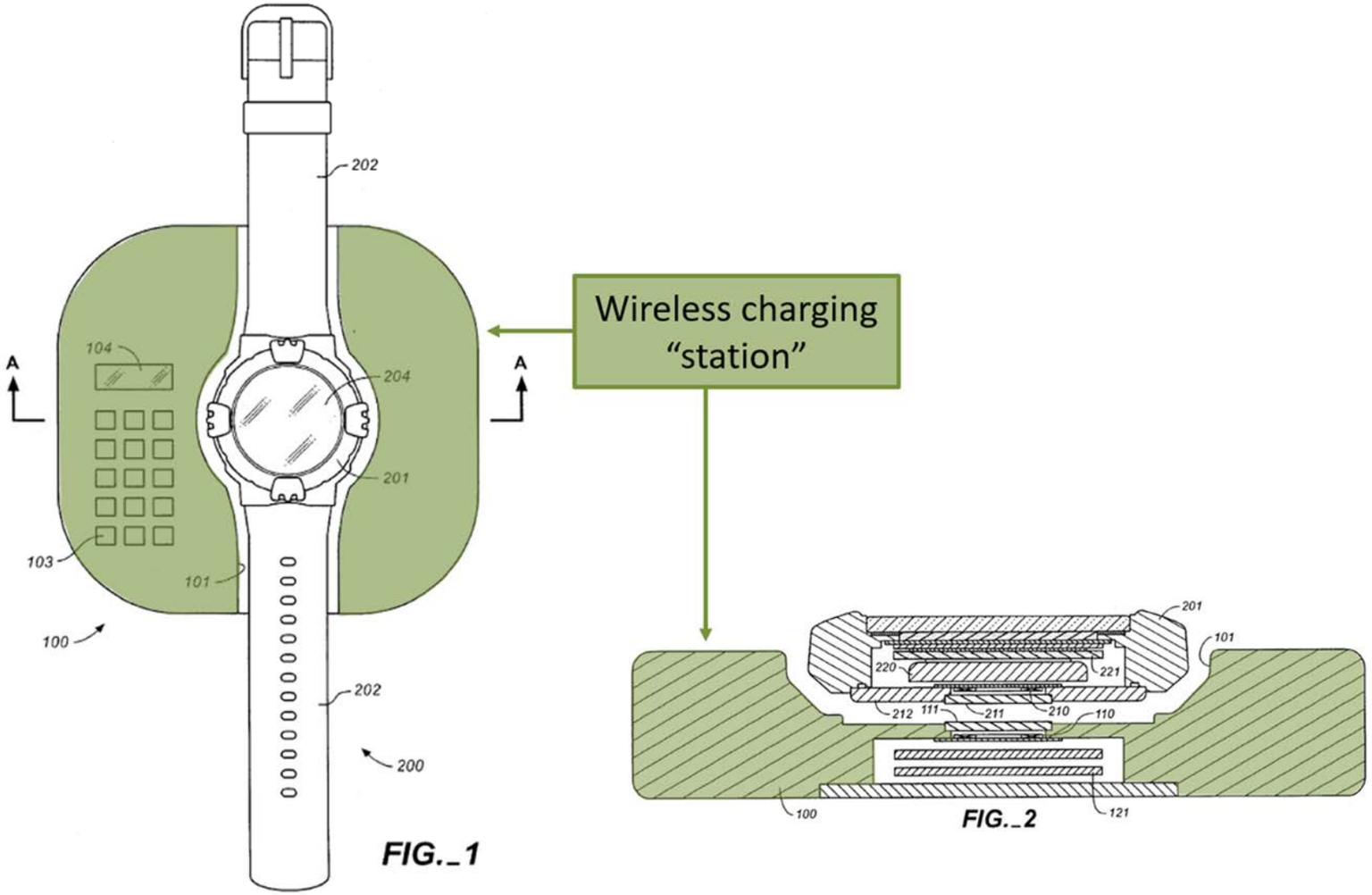

Honda Discloses Wireless Charging Coils

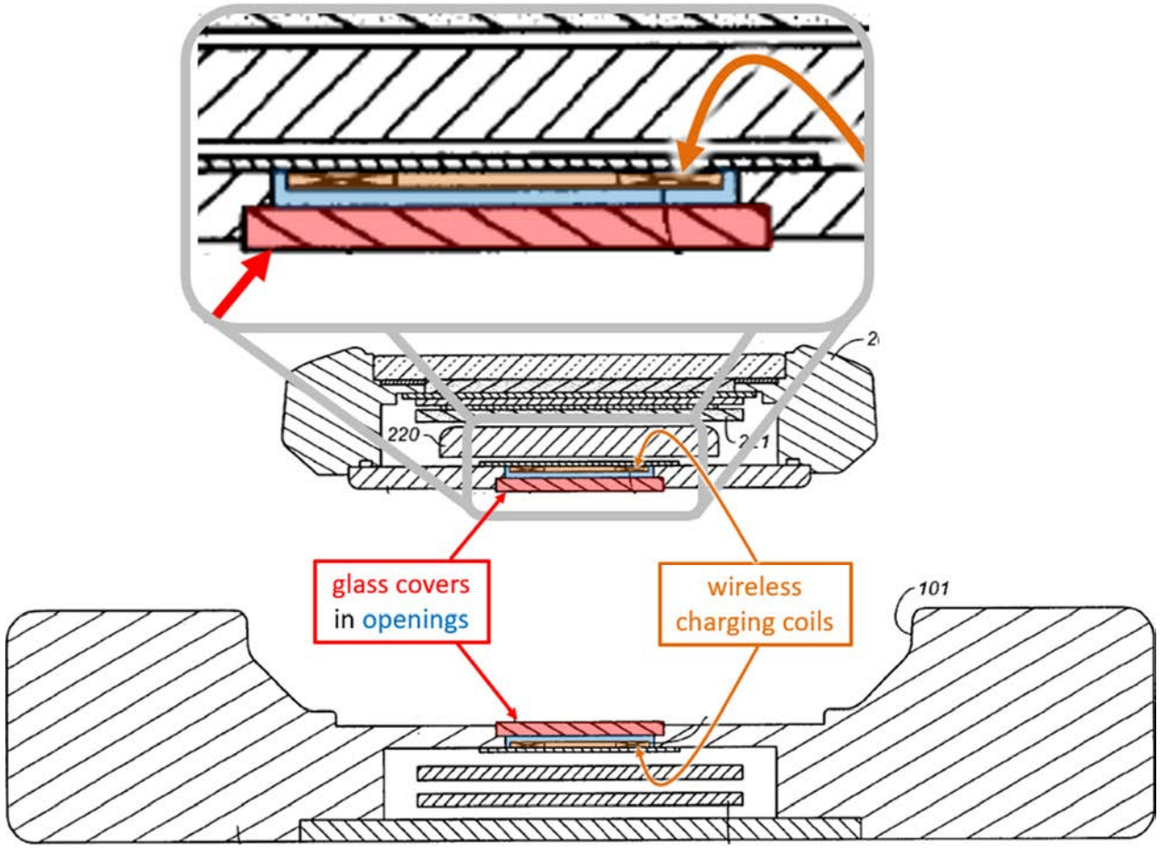

’783 Pet. at 24; *see* EX1006 (Fig. 2); EX1003 ¶ 120

’491 Pet. at 23; EX1006 (Fig. 2); EX1003 ¶ 147

Modify Kotanagi To Accommodate Honda's Coils

Given Honda's teaching of a wireless receive coil near a rear opening similar to that taught in Kotanagi (where both Honda's and Kotanagi's openings have a cover glass), a POSITA would have used Honda's teachings to either: 1) modify Kotanagi to position a wireless charging coil behind Kotanagi's cover glass, LED, and PD; or 2) enlarge Kotanagi's opening and cover glass to make room for a coil behind the cover glass, surrounding the LED and PD. In either case, the resulting magnetic flux would pass through the cover glass, as taught by Honda. The purple shading in the figure below shows that space was already available in Kotanagi's "through-hole" behind and around the outside of the other listed components, making the modification from Honda simple and feasible, with a high expectation of success:

'491 Pet. at 24–25 (discussing Claim 7)

Modify Kotanagi To Accommodate Honda's Coils

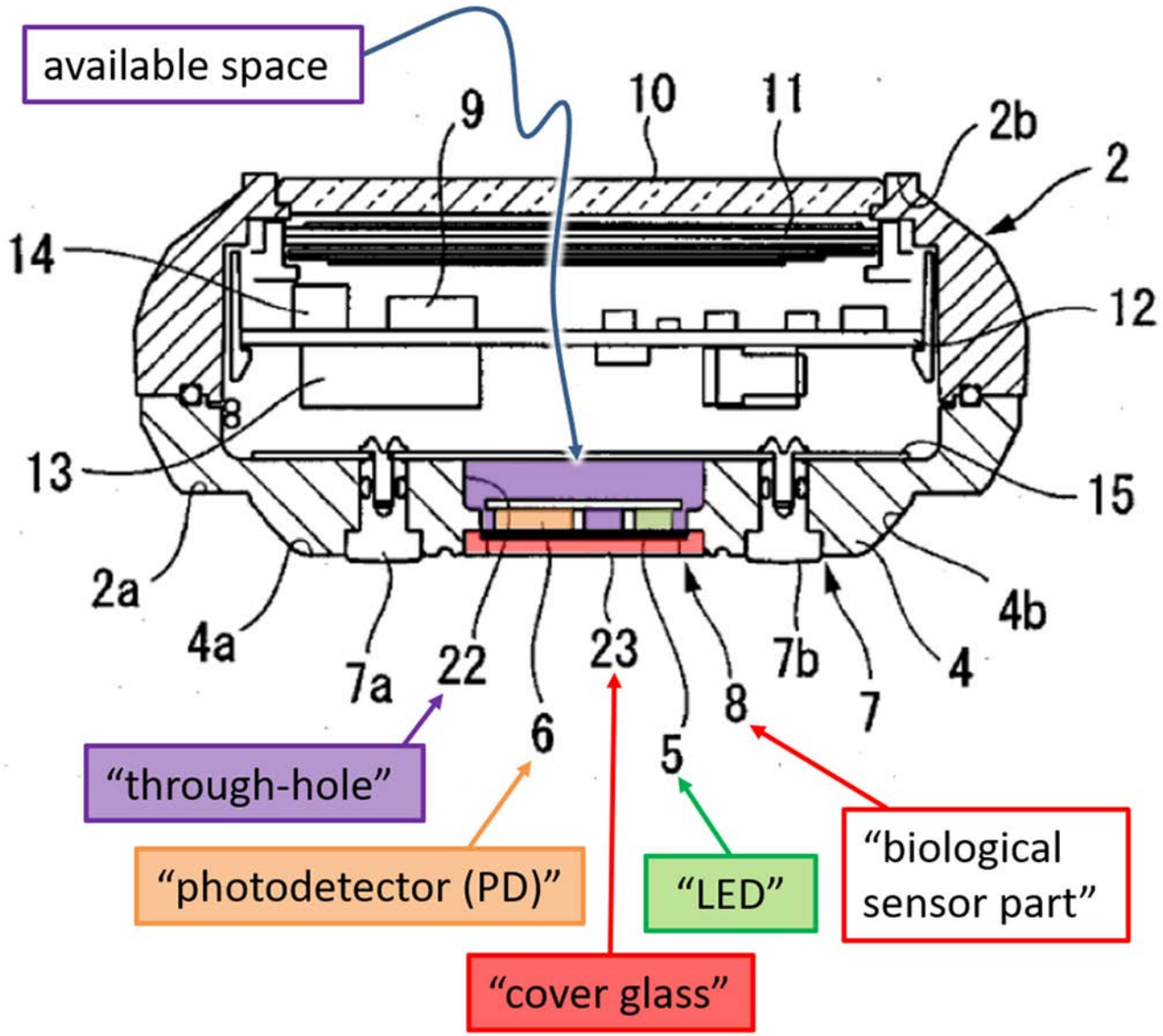

'783 Pet. at 31–33; EX1005 (Fig. 5); EX1003 ¶ 131

'491 Pet. at 27–30; EX1005 (Fig. 5); EX1003 ¶ 149

Modify Kotanagi To Accommodate Honda's Coils

Kotanagi's cover glass is already centrally located at the base of the device consistent with Honda's wireless charging design. A POSITA would have known to modify Kotanagi's device based on Honda's teachings to align a charging receive coil behind this cover glass (in a similar position and with a similar size to that taught in Honda). With this straightforward modification (motivated, for example, by Kotanagi's own reference to "contactless" charging and Honda's teaching of how to do so in a watch-style device), the cover would be "configured to pass wireless power" in the claimed manner. Accordingly, Kotanagi and Honda teach the cover "configured to pass wireless power from an external wireless charging device to the wireless charging receive coil." EX1003 ¶127–129.

'783 Pet. at 30 (discussing Claim 9)

Modify Kotanagi To Accommodate Honda's Coils

Given this and Kotanagi's teaching of a "biological sensor part" with an LED and photodetector "disposed adjacent to one another . . . so as to touch the inside of the glass cover 23" (*see* EX1005 ¶(0055)), a POSITA would have used Honda's teachings to either: 1) modify Kotanagi to position a wireless charging coil behind Kotanagi's cover glass, LED, and PD; or 2) enlarge Kotanagi's opening and cover glass to make room for a coil behind the cover glass, surrounding the LED and PD. In either case, the resulting magnetic flux would pass through the biosensor module, including the cover glass, as taught by Honda. The purple shading in the figure below shows that space was already available in Kotanagi's "through-hole" behind and around the outside of the other listed components, making the modification from Honda simple and feasible, with a high expectation of success:

'783 Pet. at 39–40 (discussing Claim 11)

Modify Kotanagi To Accommodate Honda's Coils

Accordingly, a POSITA would have used the wireless charging disclosure and goal of "contactless" charging expressed by Kotanagi (EX1005 ¶(0053)) as a motivation to combine with the teachings of Honda. Honda's teachings further enable the wireless charging Kotanagi mentions as desirable. To do this, a POSITA would have (after adjusting for any scale differences) positioned a wireless charge coil in the available space of Kotanagi's through-hole 22:

Kotanagi's cover glass is already centrally located at the rear, so a POSITA would have readily modified this device based on Honda's teachings to include a charging receive coil behind the cover glass (in a similar position and with a similar size to that taught in Honda). With this straightforward modification,

'783 Pet. at 49–50 (discussing Claim 15)

If larger coil desired, POSITA would have enlarged cover

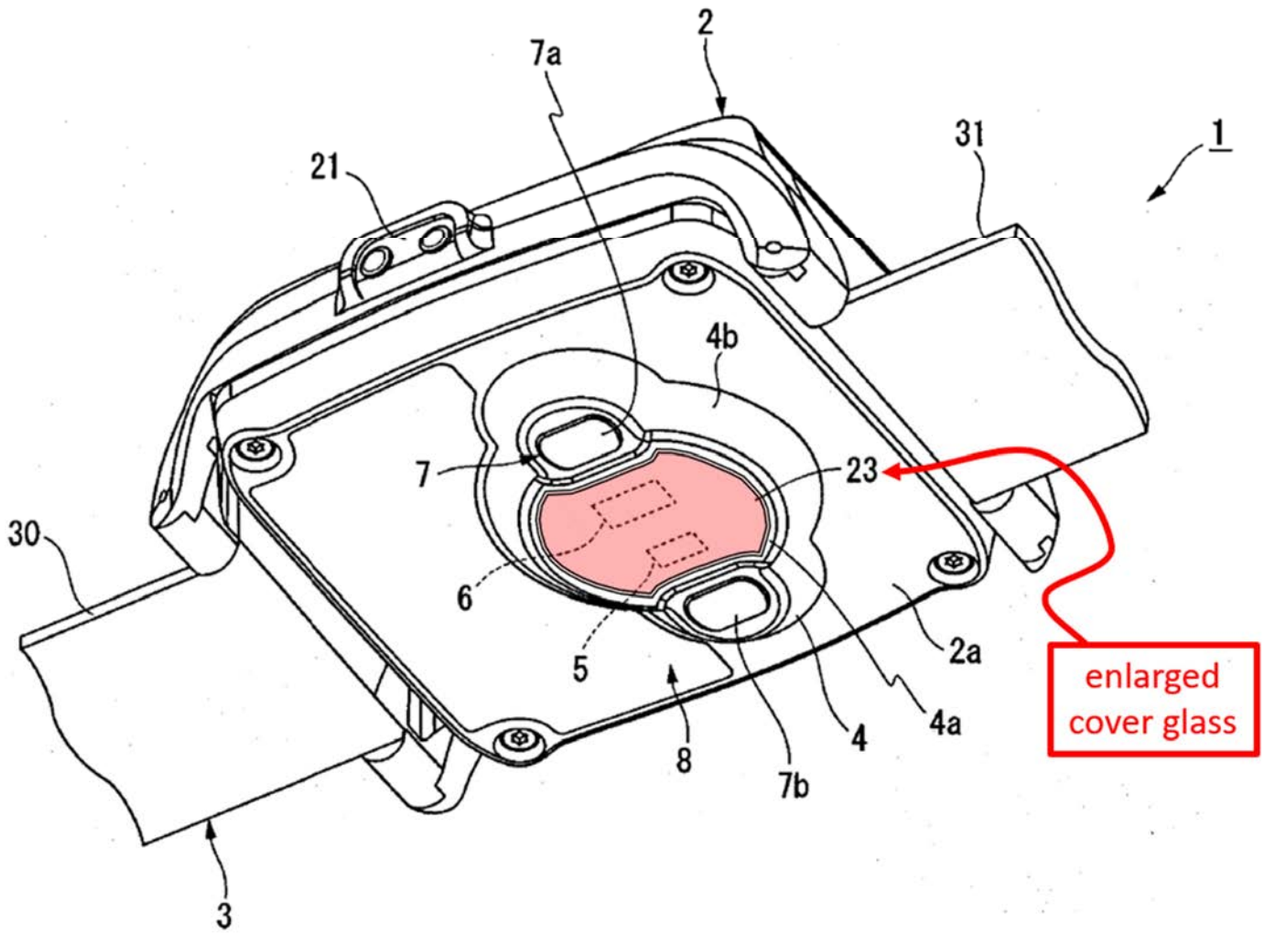

'783 Pet. at 39; '783 Reply at 10, 16; *see* EX1005 (Fig. 5); EX1003 ¶ 145

'491 Pet. at 24; '491 Reply at 8, 13; *see* EX1005 (Fig. 5); EX1003 ¶ 142

If larger coil desired, POSITA would have enlarged cover

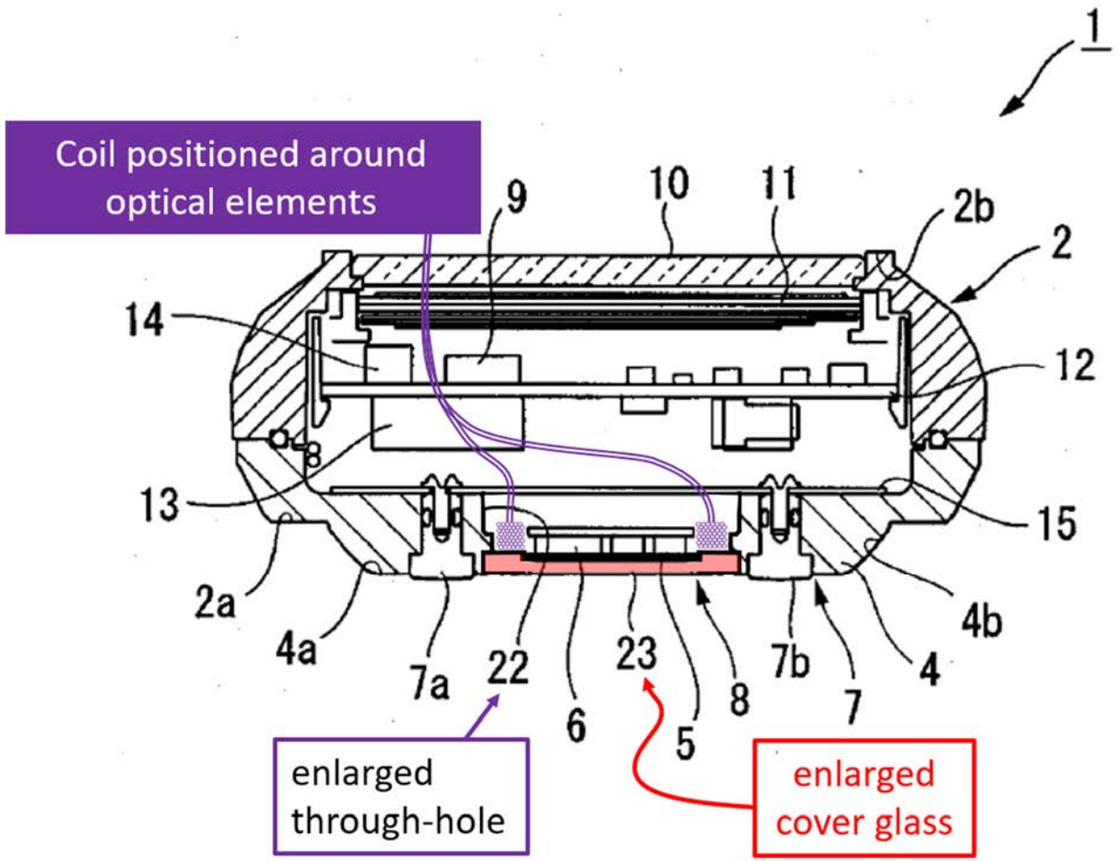

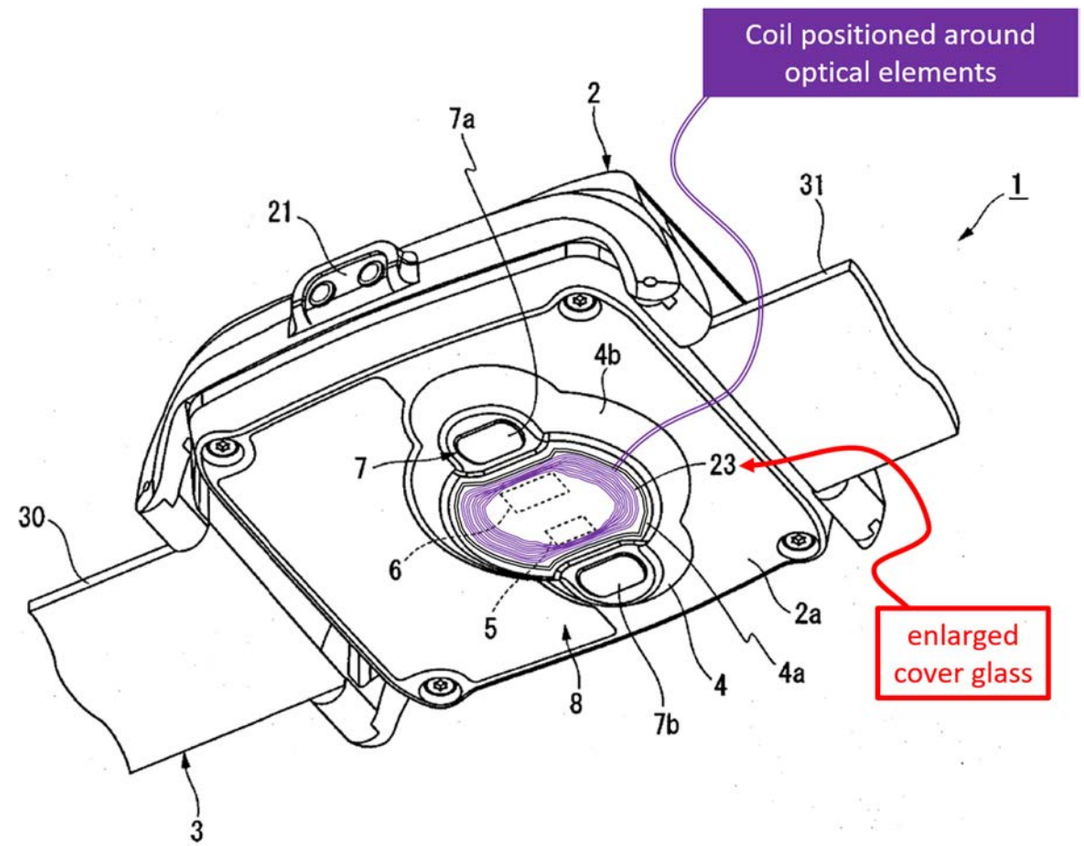

'783 Pet. at 39; '783 Reply at 16; *see* EX1005 (Figs. 5, 7); EX1003 ¶ 145

'491 Pet. at 24; '491 Reply at 13–14; *see* EX1005 (Figs. 5, 7); EX1003 ¶142

’783 and ’491 Motivation to Combine, Expectation of Success

UNDISPUTED:

(1) Kotanagi suggests “contactless” charging

(2) Honda teaches wireless charging for biosensing watches

(3) Both references have glass-covered rear openings

(4) Honda positions a wireless receive coil behind its glass to improve wireless power transmission

AND

’783 and ’491 Motivation to Combine, Expectation of Success

(5) Kotanagi’s watch profile fits intimately into Honda’s charging station profile

Honda’s watch, with Honda’s station	Kotanagi’s watch, with Honda’s station
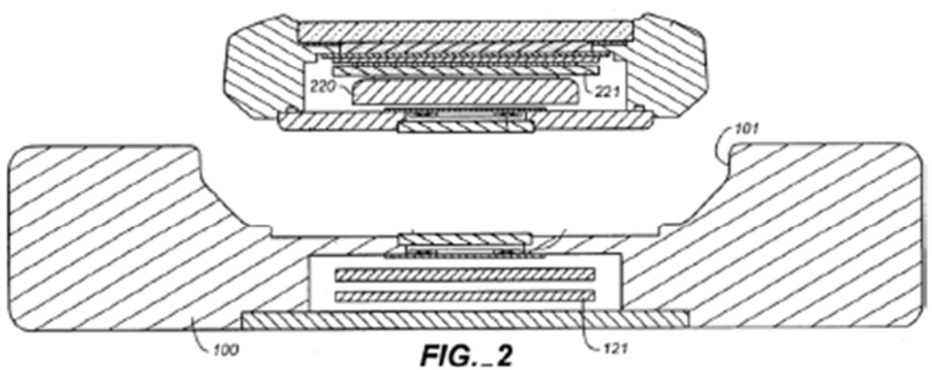	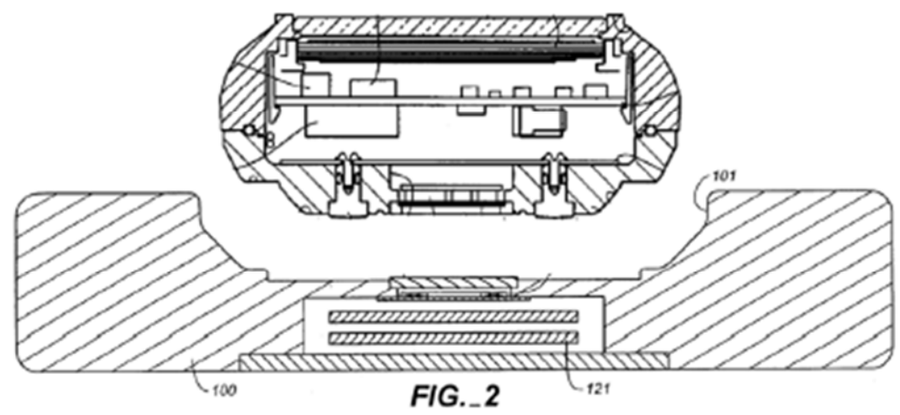

’783 Pet. at 94; *see* EX1006 (Fig. 2); EX1005 Fig. 7

’491 Pet. at 26; *see* EX1006 (Fig. 2); EX1005 Fig. 7

Kotanagi's dimensions would not have prevented the combination

Apple shoehorns a 20 mm dimension from Fig. 8 into Fig. 5 to assert a maximum coil width of 10 mm.

[FIG. 8]

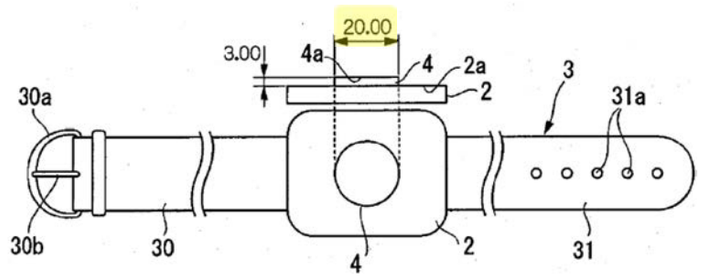

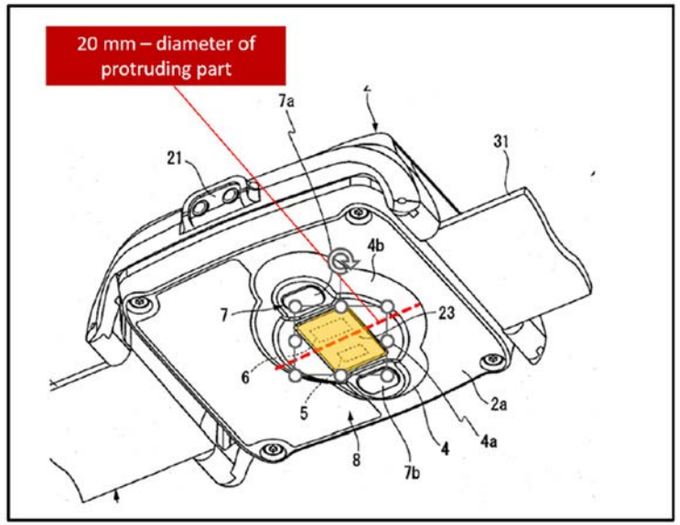

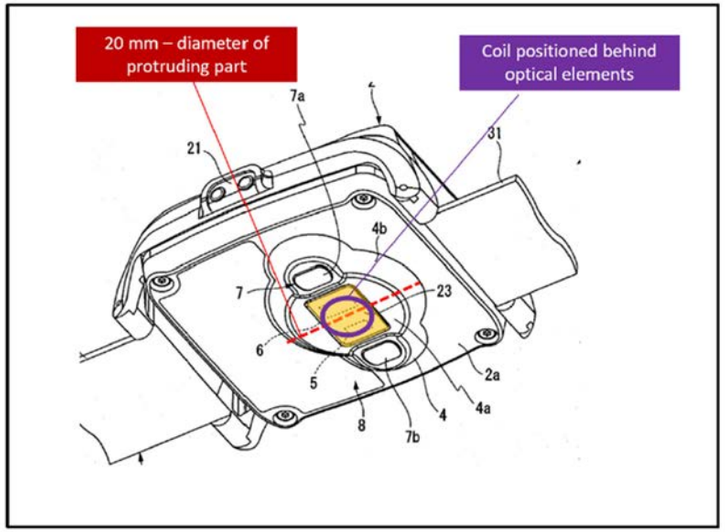

Kotanagi's dimensions would not have prevented the combination

But Apple's own evidence shows 6.5 mm, 9.5 mm coil widths are, inherently, "suitable" and provide a "good power level."

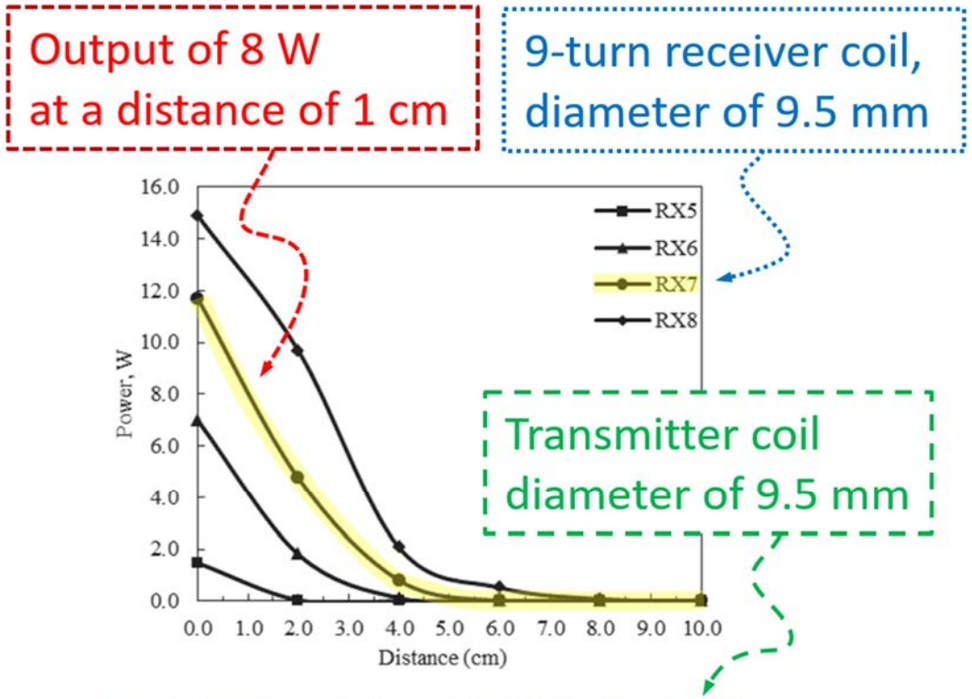

Figure 13: Output power over distance using TX3 ($D_{T2} = D_{R2} = 9.5$ mm).

Q. Okay. So, in your experience with wearable devices, are these wattages sufficient to charge a small wearable?

A. So, these are, these watts, the wattages are a good power level.

'783 Reply at 9–11; EX2028, 2, 5, Table 3, Fig. 13; EX1052, 112:8–113:4; EX1060 ¶ 320

'491 Reply at 7–8; EX2028, 2, 5, Table 3, Fig. 13; EX1052, 112:8–113:4; EX1060 ¶ 345

Apple's "In a Vacuum" Sur-Reply Argument Is Incorrect

Table 3
Specification of Receiver Coil, RX (copper wire, diameter, d = 1.18 mm)

Coil Type	Total number of turn, N_2	Coil Type	Total number of turn, N_2
D_{R1} = 6.5 mm		D_{R2} = 9.5 mm	
RX1	3	RX5	3
RX2	6	RX6	6
RX3	9	RX7	9
RX4	15	RX8	15

VI. CONCLUSION

This wireless power transfer, using a resonant inductive coupling, was developed by circular loop coils. Depending on the dimension of transmitter and receiver coils, i.e., diameter and number of turns of the coils, higher output voltages were achieved in the range of resonant frequency from 20.3 to 37.1 kHz. Furthermore, the power transfer occurred up to an air gap distance of 10 cm with the highest output power of 15.6 W. In addition, a monitoring system using an Arduino MEGA was connected to the wireless power transfer to measure the output voltage with respect to the air gap distance. Thus, the developed wireless power transfer is suitable to charge wearable and medical devices as well as in IoT applications to provide a cable-free solution and an easier charging terminal.

'783 Reply at 9–10; EX2028, 2, 5, Table 3; EX1060 ¶ 320

'491 Reply at 7; EX2028, 2, 5, Table 3; EX1060 ¶ 345

Honda's generalized goals of "quick and efficient" charging would not have stymied a Kotanagi/Honda combination

- Kotanagi has no 10 mm restriction
- Honda specifies no minimum acceptable speed or efficiency
- Patent claims don't require a particular speed or efficiency
- Honda is relevant for "all" it contains
  In re Heck, 699 F.2d 1331, 1333 (Fed. Cir. 1983)
- Apple's expert admitted even "trickle charge" is beneficial

Honda's generalized goals of "quick and efficient" charging would not have stymied a Kotanagi/Honda combination

Apple fails to support its arguments regarding optical thicknesses and separation distances

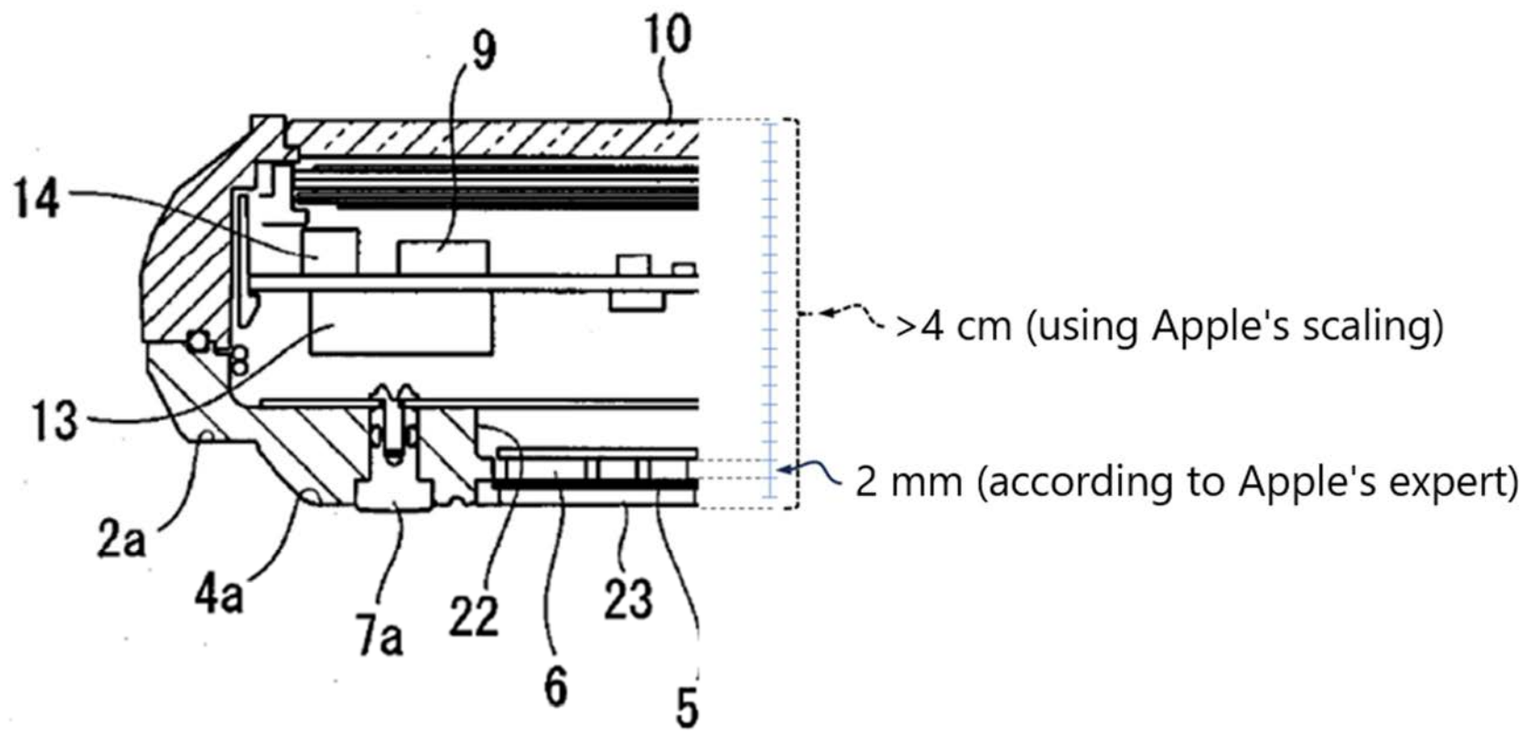

Honda's generalized goals of "quick and efficient" charging would not have stymied a Kotanagi/Honda combination

Honda does not require a specific charging efficiency

- "distance decreases" ➔ "transmission efficiency increases"

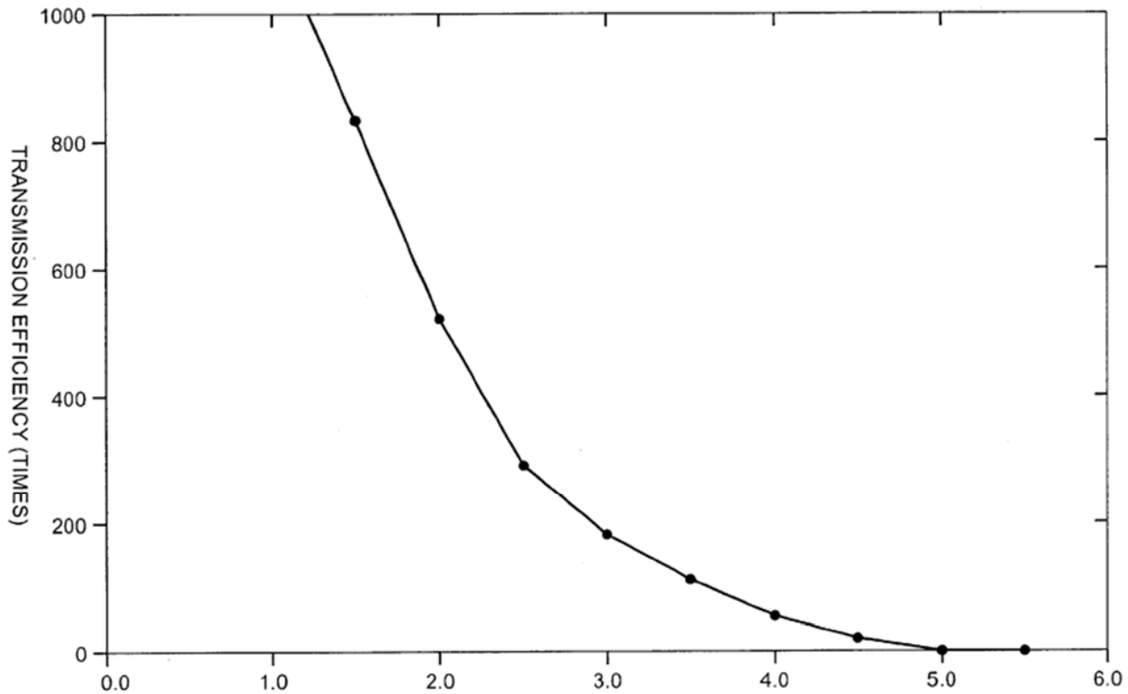

FIG._14

- A POSITA could choose a point on this curve, balancing distance and efficiency.
- Apple's expert admitted such trade-offs are a standard part of engineering.

'783 Reply at 10–13; EX1006, Fig. 14, cols. 2:39–43, 13:14–16; EX1052, 19:17–20:20; EX1060 ¶332

'491 Reply at 8–12; EX1006, Fig. 14, cols. 2:39–43, 13:14–16; EX1052, 19:17–20:20; EX1060 ¶357

Honda's generalized goals of "quick and efficient" charging would not have stymied a Kotanagi/Honda combination

"Simultaneous advantages and disadvantages" do not necessarily "obviate motivation to combine."

Medichem, S.A. v. Rolabo, S.L., 437 F.3d 1157, 1165 (Fed. Cir. 2006)

Contrary to Sur-reply, Honda Teaches Use of Non-air Cores

The station-side coil **110** and the watch-side coil **210** are of a air-core type without any core, to limit the magnetization of a watch mechanism, to avoid an increase in the weight of the watch, and to prevent the exposure of a magnetic metal. When the present invention is applied to an electronic apparatus in which these concerns are not important, a coil having a core can be used. If the frequency of a signal fed to the coil is sufficiently high, an air-core type is perfectly acceptable.

'783 Reply at 17; '783 Sur-reply at 8–9; EX1006 col. 6:41–49; EX1060 ¶343

'491 Reply at 14; '491 Sur-reply at 10; EX1006 col. 6:41–49; EX1060 ¶369

Contrary to Sur-reply, Fraser supports the combination

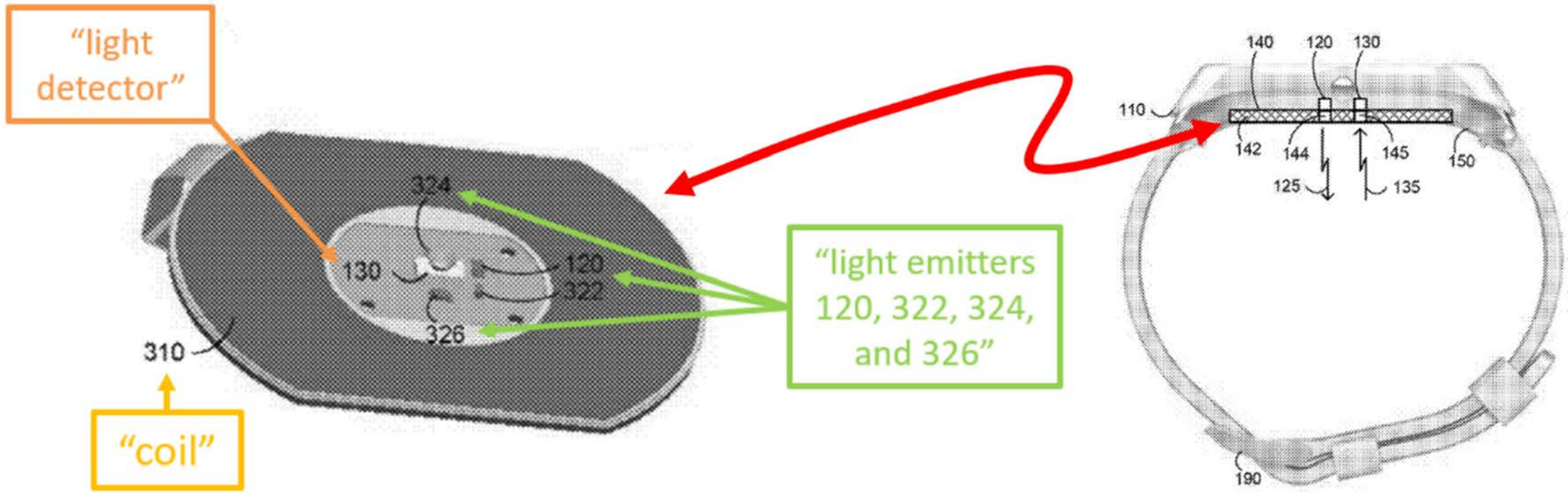

'783 Reply at 17–18; EX1041 (Figs. 3,1); EX1060 ¶344-347

'491 Reply at 15–18; EX1041 (Figs. 3, 1); EX1060 ¶370-373

Power transfers wirelessly by magnetic flux passing through the center of transmit and receive coils

Anthony testimony:

Q. [I]n both cases the field lines appear to be closer to each other in the center of the ring. Is that right?
A. . . . [A]s we discussed, the lines would sort of encircle and so it is showing the geometric level set field across the magnetic flux.

Q. Is the flux density greater in the center of the coil?
. . .
A. That is what this would tend to suggest.

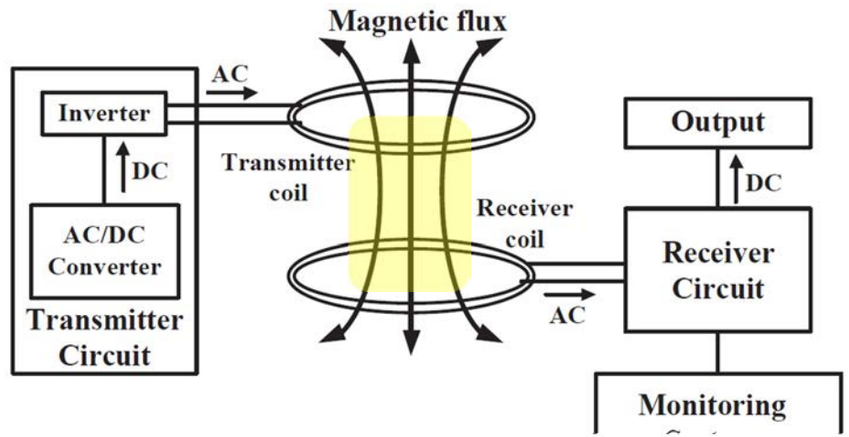

Figure 3: Block diagram of a wireless

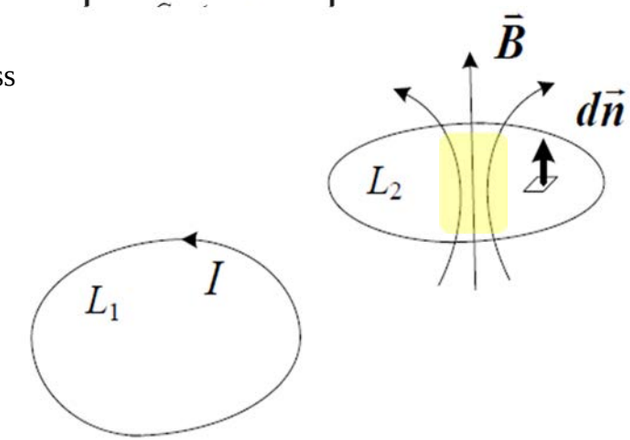

Figure 4.2: Geometry for computation of flux linkages and mutual inductance between closed paths L_1 and L_2

Honda shows magnetic flux highest in center of paired coils

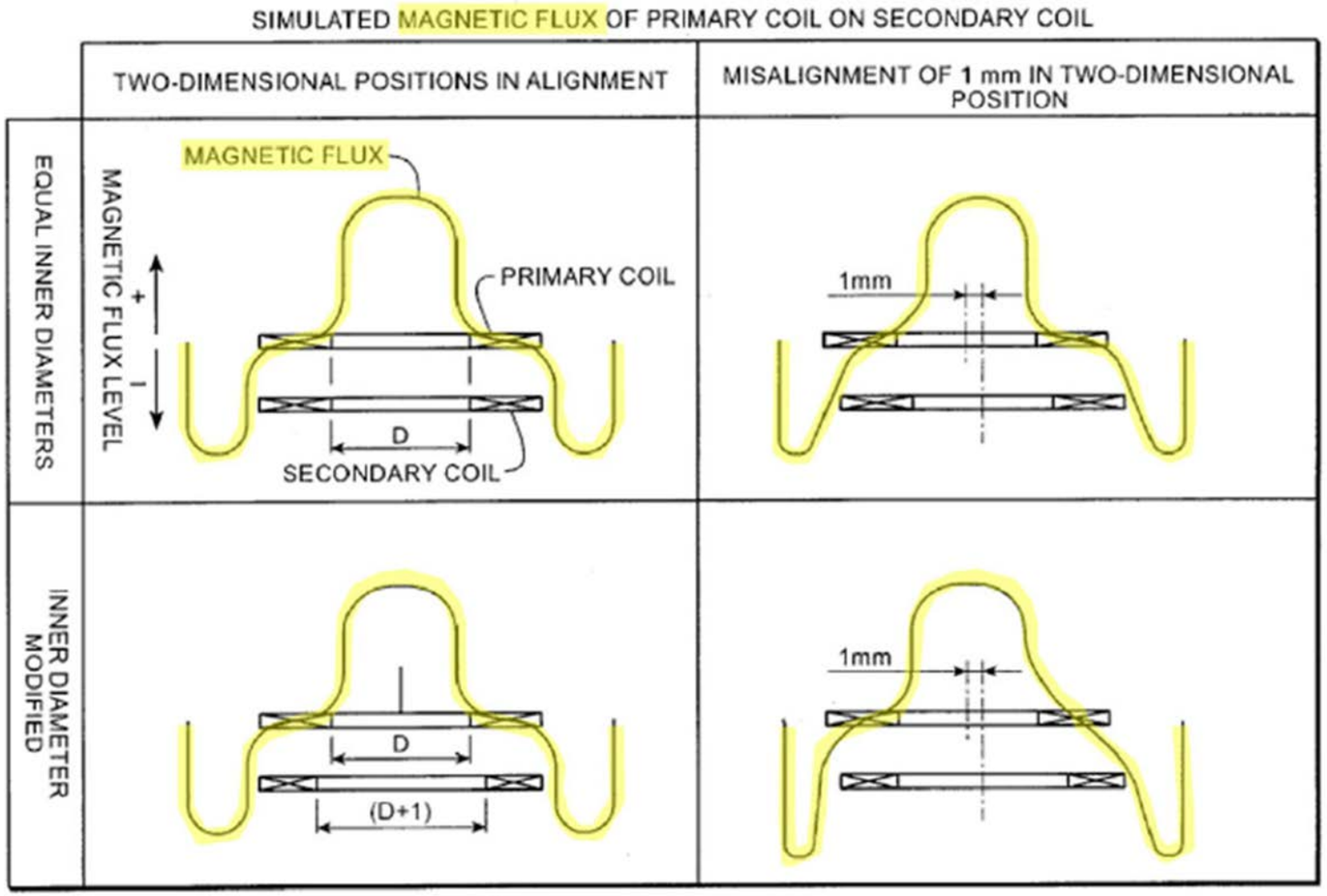

FIG._10

'783 Reply at 24; EX1006 (Fig. 10); EX1060 ¶351

'491 Reply at 22; EX1006 (Fig. 10); EX1060 ¶377

Apple omits magnetic flux from Fraser combination

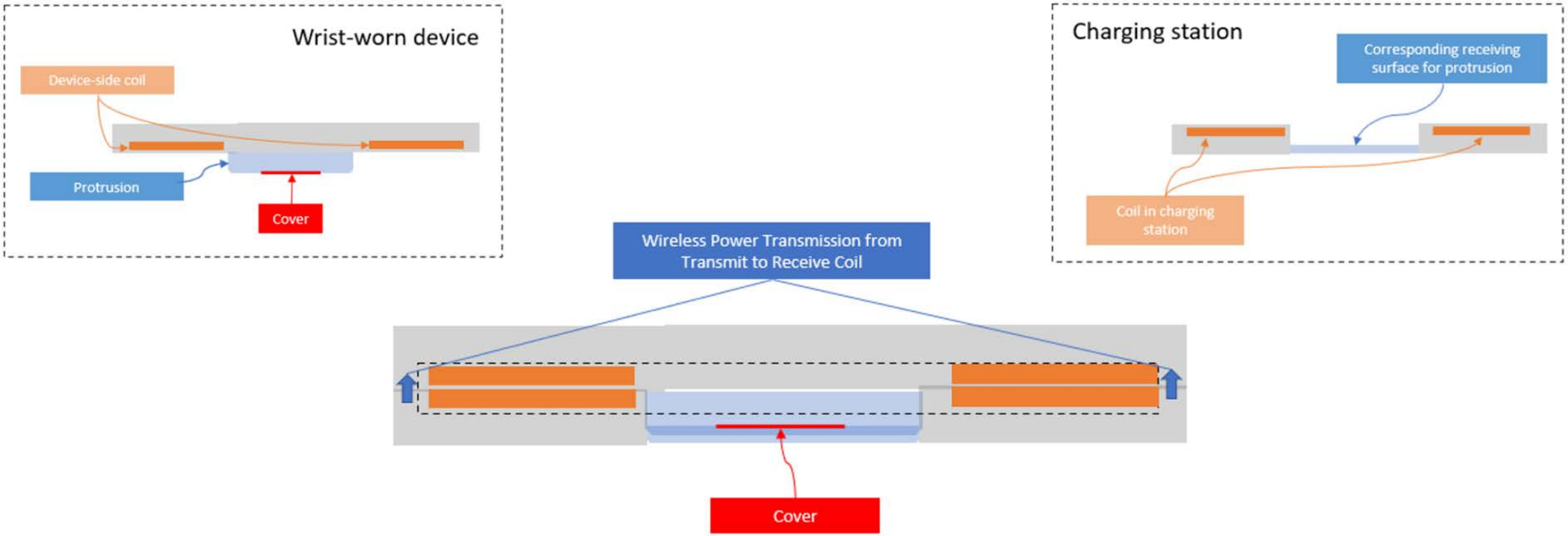

Fraser combination would pass magnetic flux through cover

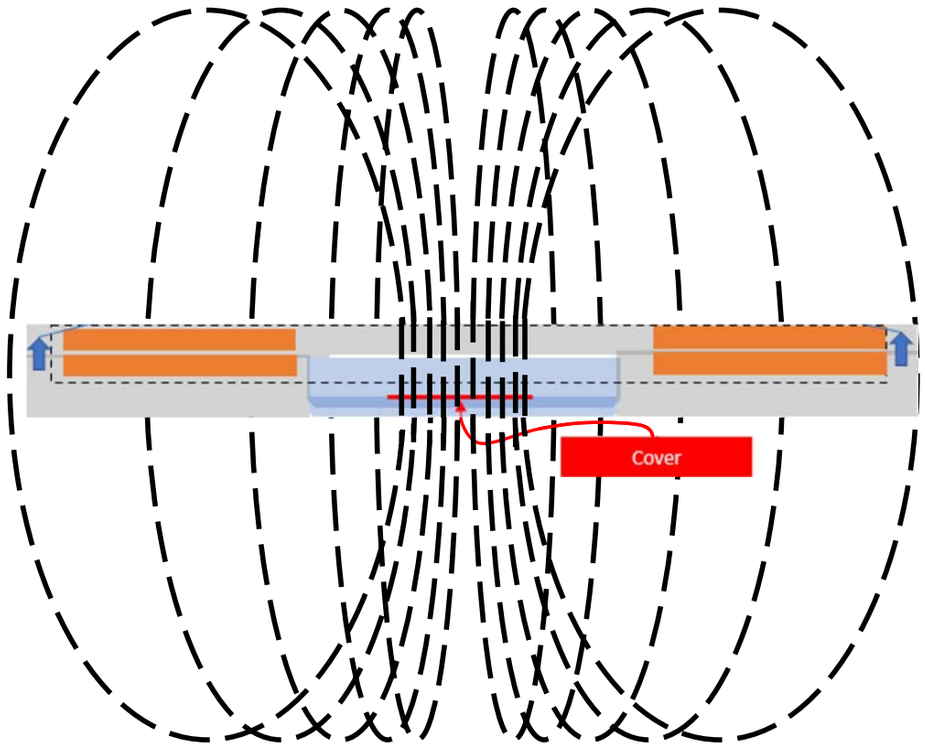

Q. If you were to draw field lines showing the magnetic flux in this arrangement, would the field lines flow through the center where the cover is?

A. So, there would be field lines between the coils, you know, as we described previously. They would encircle. The functional power transfer is happening in the field that is happening between the two coils.

Apple falsely denies flux shows power transfer through cover

Q. If power isn't transferred through magnetic flux, how is it transferred?

A. It is transferred in the magnetic flux between the coils.

Q. And in this arrangement here, where would the magnetic flux lines be?

A. The magnetic flux lines would go through the area between the coil and through the cover. But the power that is being transferred is not going through the cover . . . .

EX1052 at 153–156; Paper 18 at 50, 60–61; '783 Reply at 25–26; EX1060 ¶353

EX1052 at 153–156; POR at 54, 62–63; '491 Reply at 22–23; EX1060 ¶379

Kotanagi and Honda would transfer power through the cover

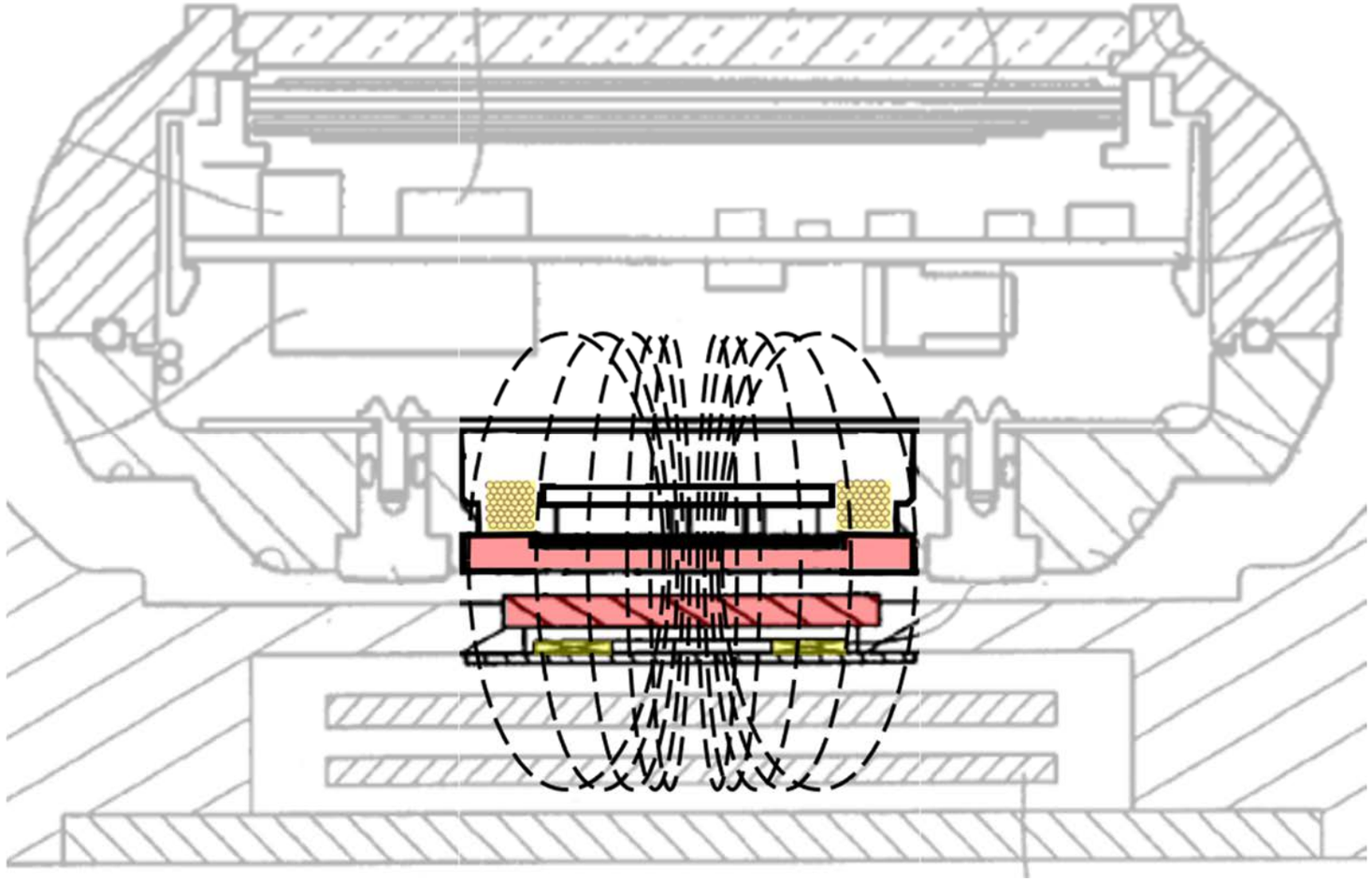

'783 Reply at 23–24; EX1060 ¶349

'491 Reply at 20–21; EX1060 ¶375

Apple's modeling does not negate expectation of success

Fraser provides no coil dimensions

Improper coil assumptions

No absolute numbers

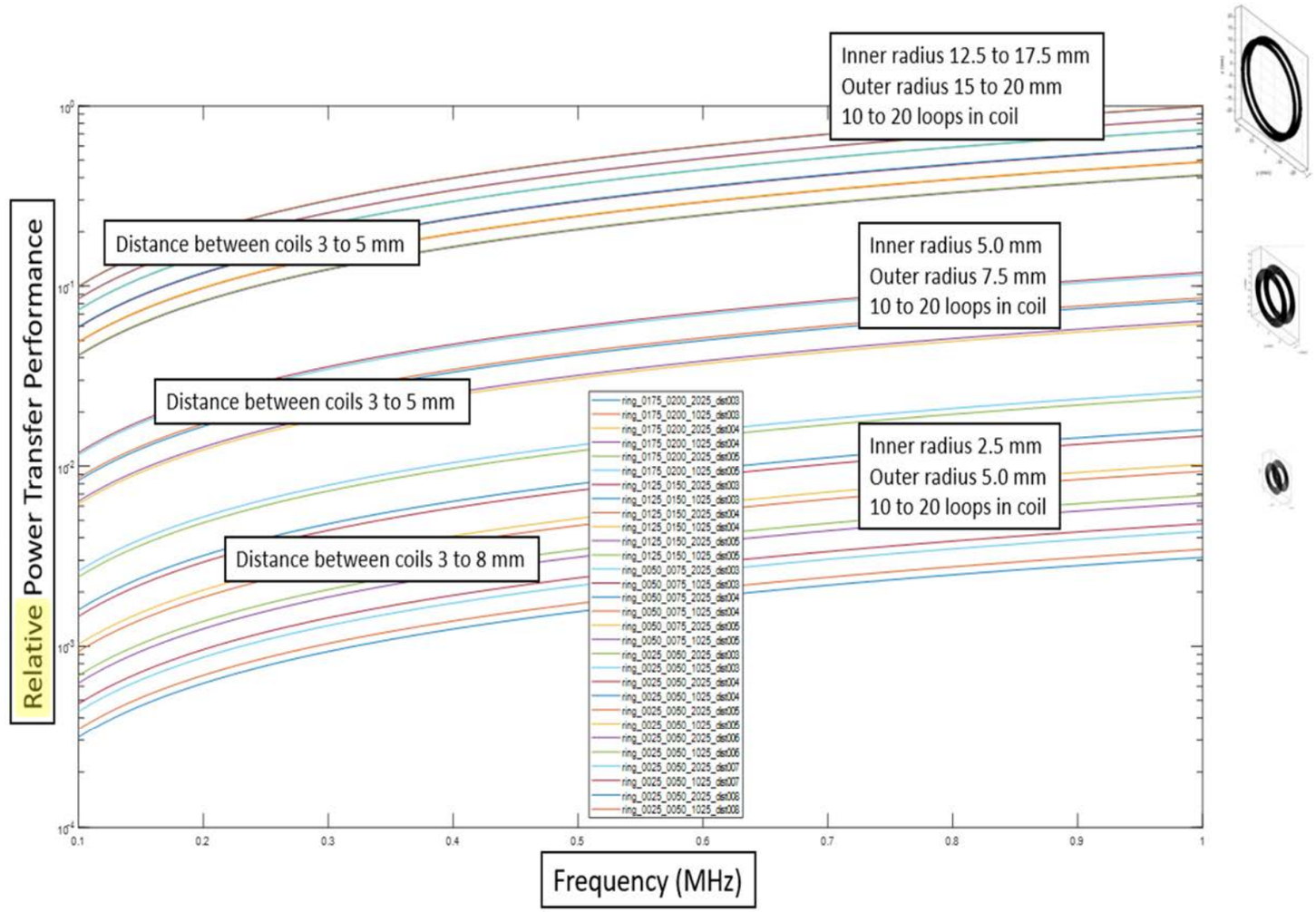

Apple's modeling proves nothing legally relevant

Conclusion:
Increasing coil number and diameter, and reducing separation distance, results in faster charging.

Apple's expert admitted this is unsurprising in view of basic principles of physics.

The claims do not require a specific charging speed.

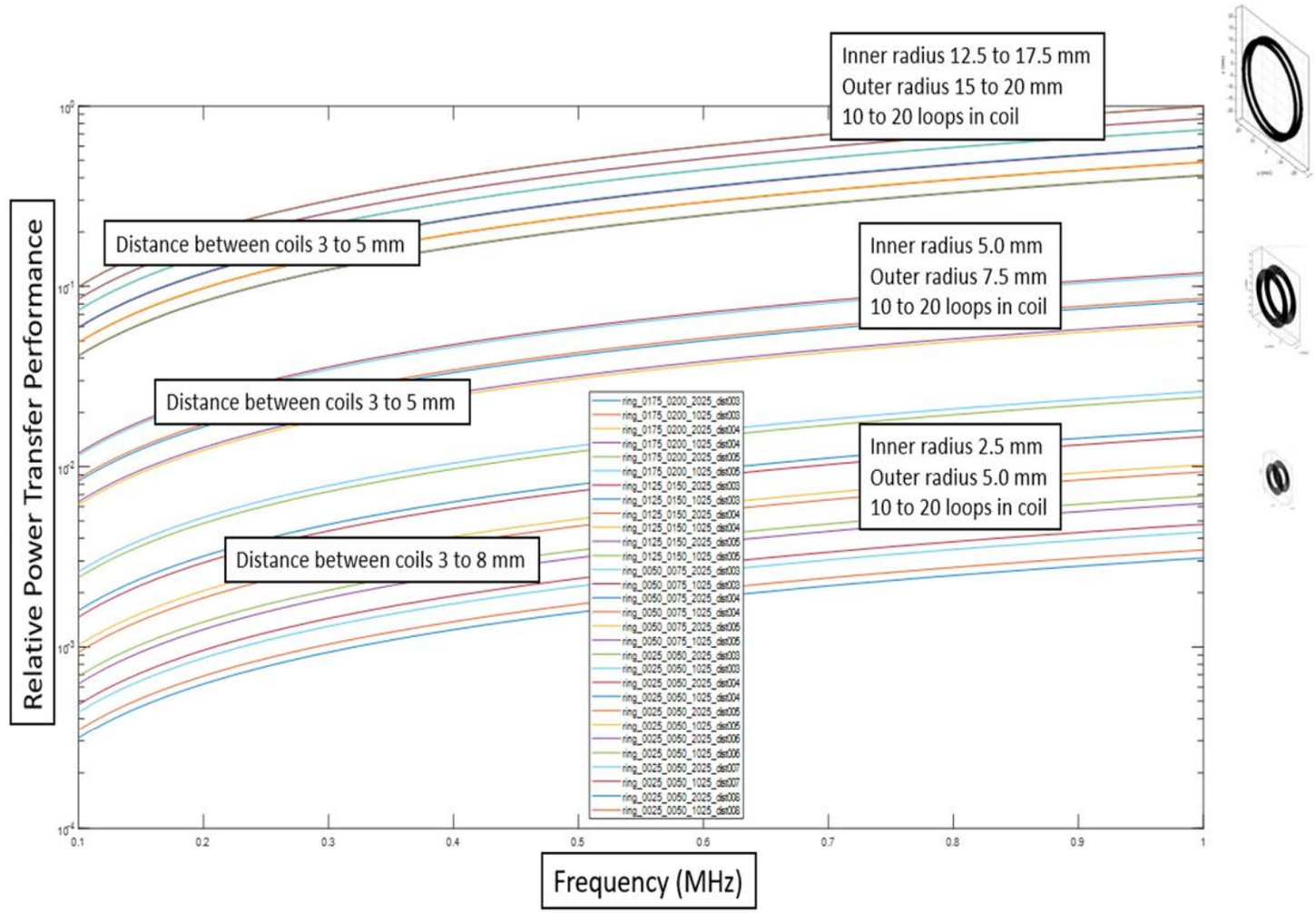

Topics

Obvious to:

1. Combine optical sensors and wireless charging coil ('491 Cl. 7)
   See also '491 Cl. 14, '783 Cls. 9, 15
2. Measure ECG using electrodes ('491 Cl. 1)
   See also '491 Cls. 13, 17
3. Make cover disk larger than opening for water-tight seal ('783 Cl. 6)
4. Use convex cover to align with concave dock ('783 Cl. 12)
5. Magnetically couple watch with charging dock ('783 Cl. 16)
6. Make charging coil diameter smaller than biosensor module ('783 Cl. 11)
7. Combine Kotanagi, Honda ('783 Cl. 9, '491 Cl. 7)

Grounds

’783

GROUND 1	Claims 9–11, 15, 19, and 20 are unpatentable as obvious in view of Kotanagi and Honda
GROUND 2	Claim 16 is unpatentable as obvious in view of Kotanagi and Honda, and optionally in further combination with Park
GROUND 3	Claims 1–7 and 14 are unpatentable as obvious in view of Kotanagi and Honda, and optionally in further combination with Kateraas
GROUND 4	Claims 12–13 and 17–18 are unpatentable as obvious in view of Kotanagi and Honda, Jabori, and optionally in further combination with Park
GROUND 5	Claims 3 and 14 are unpatentable as obvious in view of Kotanagi, Honda, Fraser, and optionally in further combination with Kateraas
GROUND 6	Claim 8 is unpatentable because it would have been obvious in view of Kotanagi and Honda, Jabori, and optionally in further combination with Kateraas and/or Park

’491

GROUND 1	Claims 7, 11, 14, and 16 are unpatentable as obvious in view of Kotanagi and Honda
GROUND 2	Claims 1–3, 5, 13, and 17 are unpatentable as obvious in view of Kotanagi, Honda, and Choi
GROUND 3	Claims 8 and 15 are unpatentable as obvious in view of Kotanagi, Honda, and Fraser
GROUND 4	Claim 9 is unpatentable as obvious in view of Kotanagi, Honda, and Orr
GROUND 5	Claims 12 and 18 are unpatentable as obvious in view of Kotanagi, Honda, and Park
GROUND 6	Claim 4 is unpatentable as obvious in view of Kotanagi, Honda, Choi, and Park
GROUND 7	Claims 10 and 19 are unpatentable as obvious in view of Kotanagi, Honda, and Jabori
GROUND 8	Claim 6 is unpatentable as obvious in view of Kotanagi, Honda, Choi, and Jabori

’491 Claim 1 – Kotanagi has two rear electrodes

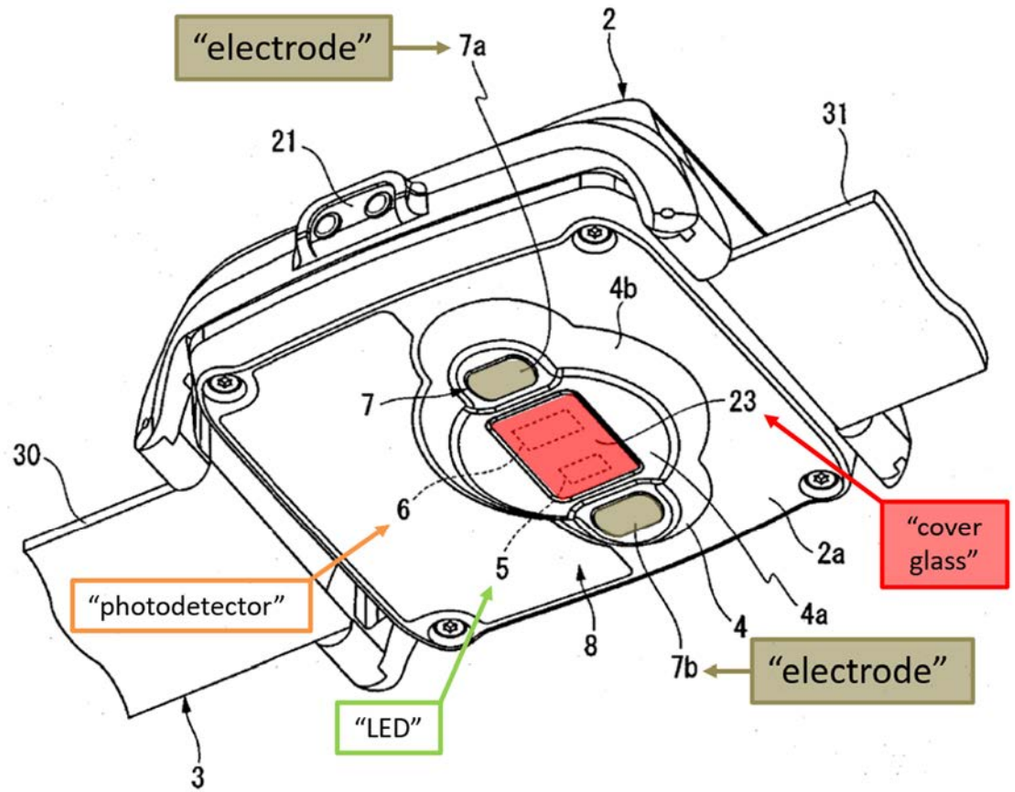

’491 Pet. at 50; EX1005 Fig. 5; EX1003 ¶¶ 53, 110

’491 Claim 1 – “the electronic watch is configured to measure an electrocardiogram using the first electrode and the second electrode.”

Two obvious options:

(1) use Kotanagi’s existing electrodes to obtain an ECG; or

Kotanagi

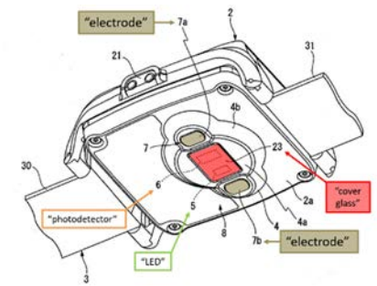

Choi, Schmid, Lapetina, teach ECG sensing with only two electrodes

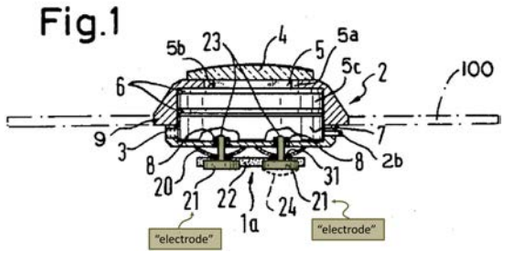

(2) add one or more additional electrodes to Kotanagi (as taught by Choi) and use both it / these and the existing electrodes to obtain an ECG.

Kotanagi + Choi

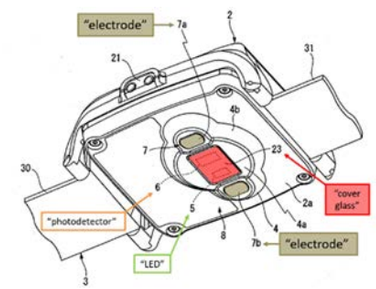

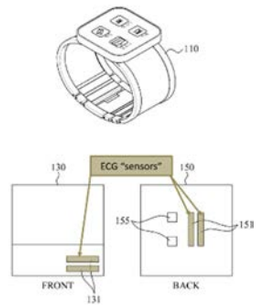

’491 Claim 1 – “the electronic watch is configured to measure an electrocardiogram using the first electrode and the second electrode.”

ECG measurements can be made using only rear electrodes

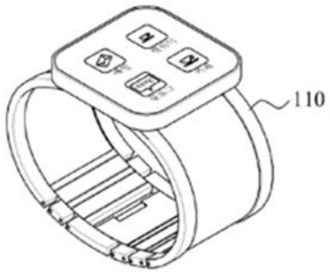

Choi (2013):
Second biosignal (can be ECG) detected “by the sensor 131 provided on the front 130 and/<u>or the sensor 151 provided on the back 150</u>.”

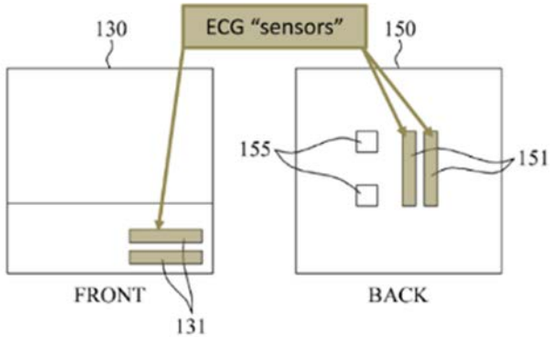

Schmid (1983):

- electrodes are “disposed in close proximity” and retain EKG precision
- “mutual spacing” is “4 to 5 mm”

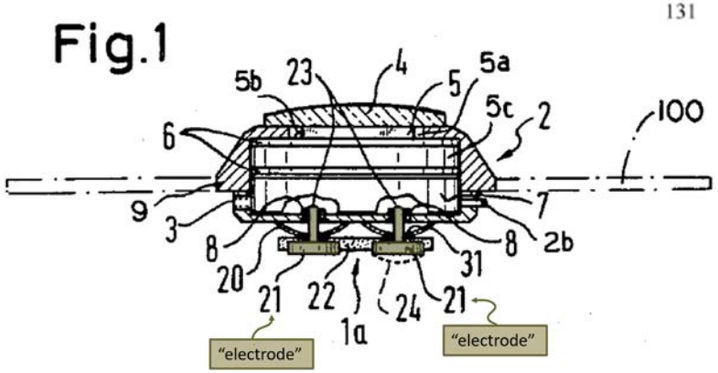

’491 Pet. at 52; '491 Reply at 27; EX1029 cols. 5:4–5, 4:17–18, 3:7–9, Fig. 1; *see id*. cols. 1:65–66, 2:1–2; EX1003 ¶¶232-233; EX1060 ¶¶ 396-398

’491 Claim 1 – “the electronic watch is configured to measure an electrocardiogram using the first electrode and the second electrode.”

Apple argues that Schmid (1983) <u>offloads</u> ECG processing, so it does not teach measuring ECG on the watch.

Schmid teaches that **<u>two electrodes on the same surface</u>** can measure ECG.

In 2013, Choi taught on-device ECG processing, using the “growing computing power of the mobile device.”

The ’491 patent also relies on generic processors.

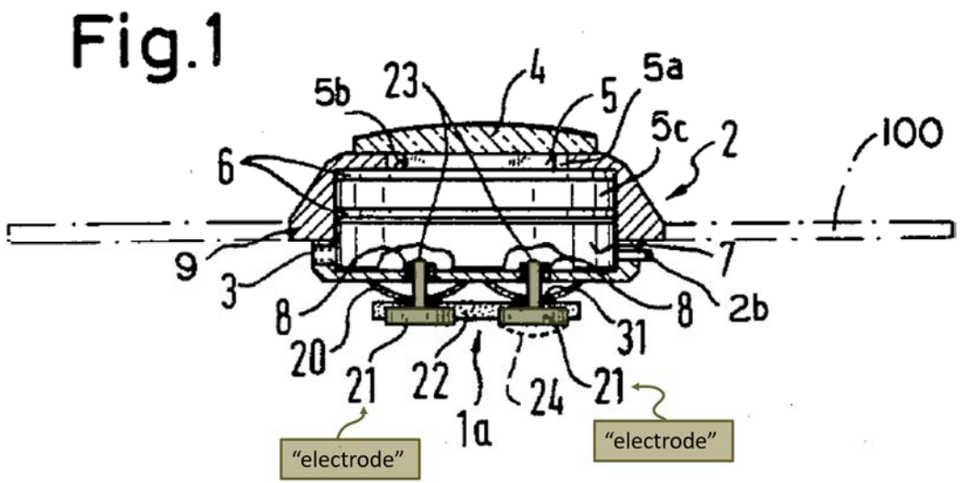

’491 Pet. at 52–53; '491 Reply at 27–28; EX1003 ¶¶232-233; EX1060 ¶¶ 396-399

Electrodes – Motivation to Combine; Expectation of Success

<u>Combining **Kotanagi** and **Choi**</u>:

- Minor, if any, structural changes to rear electrodes
- Improve heart function sensing
  Kotanagi senses PPG
  Choi senses PPG <u>and ECG</u>

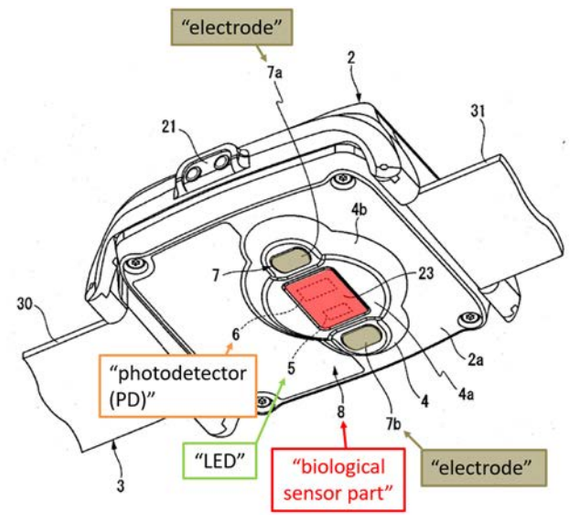

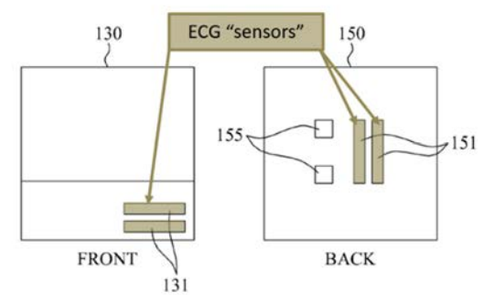

Pet. at 53–54; '491 Reply at 29; EX1011 ¶7; EX1003 ¶¶232-233; EX1060 ¶¶ 396-399

’491 Claim 1 – Response to First Sur-Reply Argument

Electrode structure, generic and similar in 1983 and 2005:

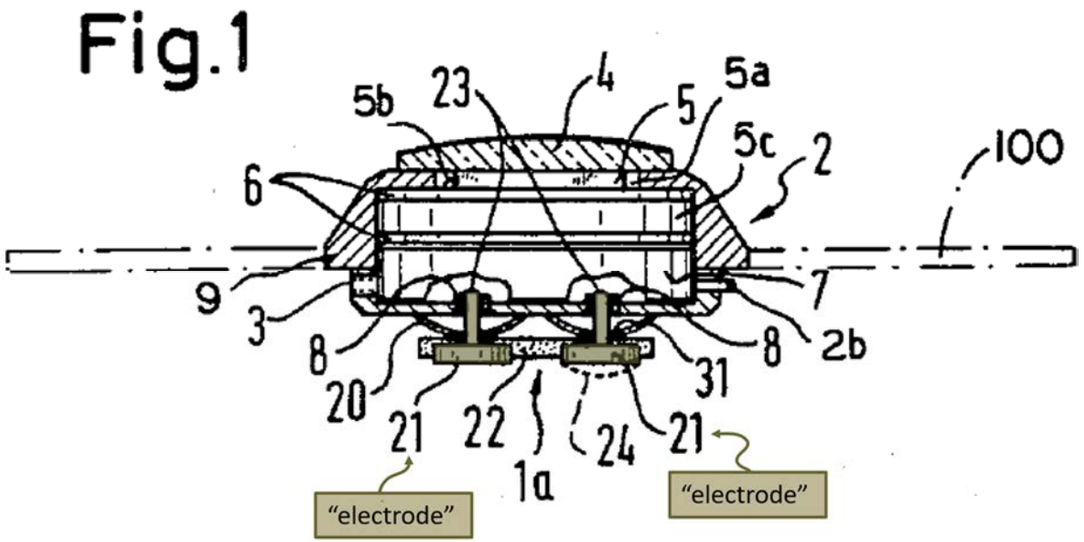

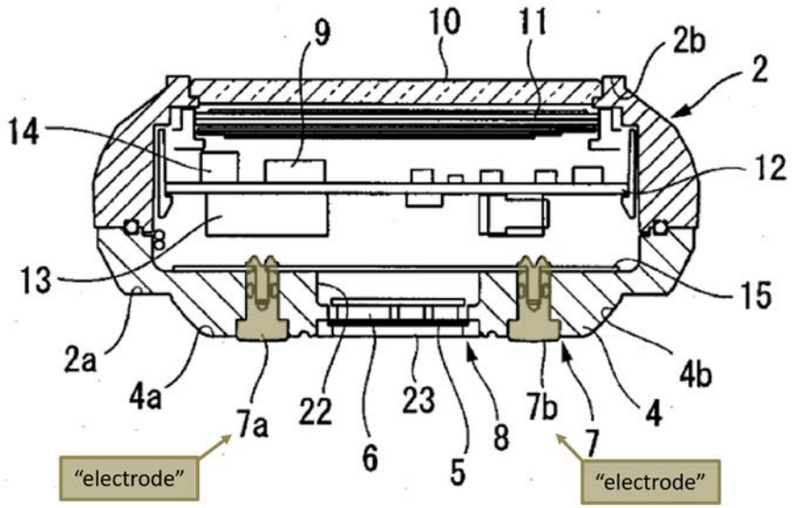

Pet. at 53–54; Reply at 27, 29, 30; EX1029 (Fig. 1); EX1005 (Fig. 7); EX1003 ¶235; EX1060 ¶403

Electrodes – Motivation to Combine; Expectation of Success

Using Kotanagi's existing electrodes for ECG would not frustrate their skin contact purpose:

The electrodes can detect skin contact, then ECG serially.

Lee discloses that ECG and/or PPG sensors can be used to detect removal of the device from the wrist

This is consistent with **Kotanagi**'s serial approach of using electrodes for contact detection prior to pulse measurement

This is consistent with **Choi**'s serial approach (authentication, then detecting detachment)

Pet. at 53–54; Reply at 31–34; EX1056 ¶ 31; EX1057 ¶ 21, 39–41; EX1005 ¶59; EX1011 ¶¶ 18, 23; EX1003 ¶¶232-236; EX1060 ¶401

’491 Claim 1 – Response to ECG/GSR Sur-Reply Arguments

The same electrodes can be used for skin contact and ECG sensing.

Autosense Paper (2011):
“ECG and GSR share a common electrode.”
“To maximize comfort and simplify the procedure for wearing the band, we integrated ECG and GSR sensors onto the same electrode”

GSR stands for “galvanic skin response” and measures “potential difference,” like Kotanagi’s skin contact electrodes.

Pet. at 53–54; Reply at 31; EX1061 §1 ¶4; EX1061 §3.2 ¶3; EX1005 ¶59; EX1003 ¶¶235-241; EX1060 ¶403

’491 Claim 1 – Response to ECG/GSR Sur-Reply Arguments

The same electrodes can be used for skin contact and ECG sensing.

Lee (2013):
“The two metal electrodes can be used as ECG and/or GSR electrodes . . . .”
“The PPG, ECG and GSR sensors are used to reliably, and redundantly detect the removal of the device from the wrist.”

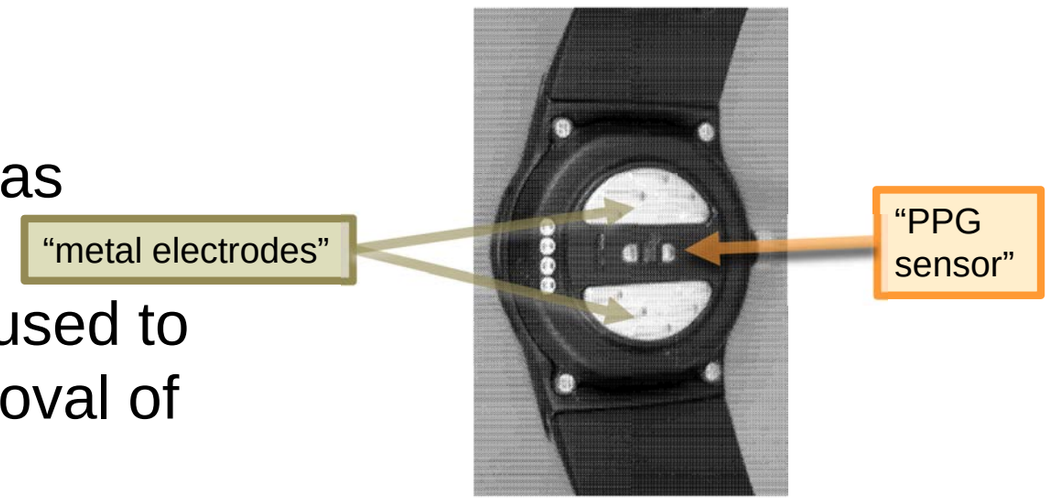

GSR stands for “galvanic skin response” and measures “potential difference,” like Kotanagi’s skin contact electrodes.

Pet. at 53–54; Reply at 27, 29, 31; EX1056 ¶¶ 2, 19, Fig. 1; EX1061 §3.2 ¶3; EX1005 ¶59; EX1003 ¶¶235-241; EX1060 ¶401–403

’491 Claim 1 – Response to ECG/GSR Sur-Reply Arguments

The same electrodes can be used for skin contact and ECG sensing.

Lapetina (2014):
“The electrical contacts 160, 170 protruding from the housing 130 could additionally be used for other purposes than measuring GSR. For example, electronics disposed in the wearable device 100 could be used to sense an electrocardiogram (ECG) signal . . . present at the electrical contacts 160, 170.”

GSR stands for “galvanic skin response” and measures “potential difference,” like Kotanagi’s skin contact electrodes.

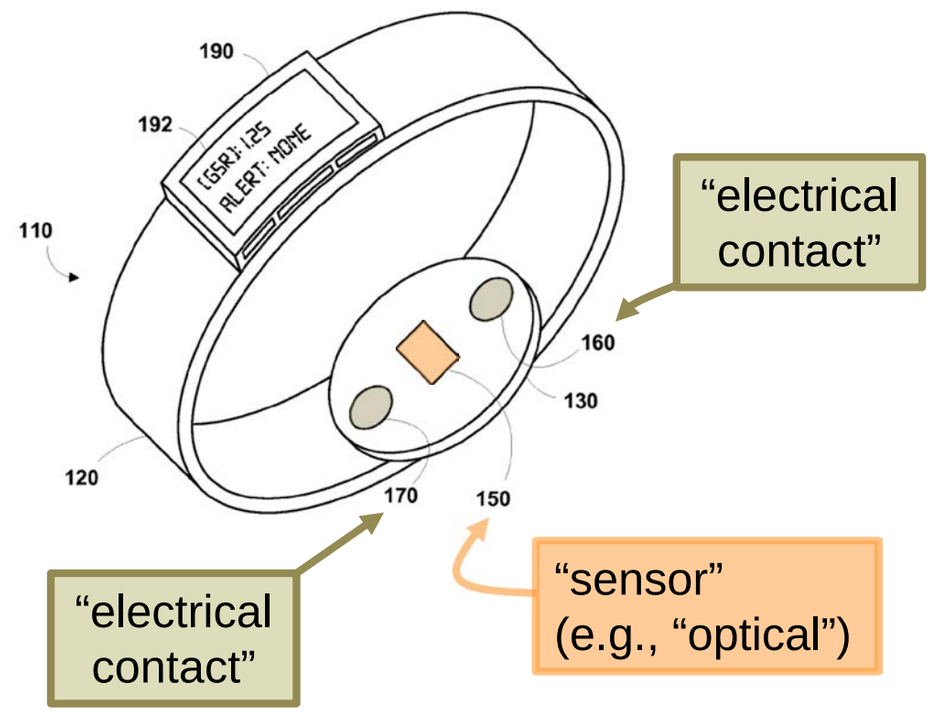

Pet. at 52; Reply at 27; EX1055, col. 5:52–62, Fig. 1; EX1061 §3.2 ¶3; EX1005 ¶59; EX1003 ¶¶235-241; EX1060 ¶401–403

’491 Claim 1 – Response to ECG/GSR Sur-Reply Arguments

Choi’s <u>impedance signal</u> (Z) is analogous to Kotanagi’s <u>electrical potential</u> (V)

- Related by Ohm’s law ($V = I\,Z$, where I is the current)
- Both require metal electrodes to contact skin surface and current (I) to flow between them
- A POSITA would have understood this relationship, through Ohm’s law

Pet. at 53–54; Reply at 30–31; EX1003 ¶235; EX1060 ¶402

’491 Claim 1 – Response to Sixth Sur-Reply Argument

Apple incorrectly argues that Choi does not use both ECG and impedance.

Choi:

> “The second sensor 220 detects a second biosignal of the user. The second biosignal may include, for example, an ECG signal, a PPG signal, a voice of the user, and/or an impedance signal generated by the body of the user”
>
> “authenticate the user by comparing the detected second biosignal . . . .”

Pet. at 53–54; POR, 71–72; Reply at 32; EX1011 ¶¶ 47, 56, Abstract; EX1003 ¶¶235–241; EX1060 ¶406–407

’491 Claim 1 – Response to Seventh Sur-Reply Argument

Examiner rejection:

In view of this, it is considered that modification of the devices described by Honda et al., Kotan[a]gi et al., and Park et al. to include ECG electrodes in combination with the optical biosensors since the combination is demonstrated by Lo et al. . . . As it is considered known from Lo et al. to incorporate an ECG sensor into a heart rate monitoring watch. **Such ECG collection may be implemented via electrodes 7a and 7B of Kotan[a]gi et al.**

EX1062 at 10; ’491 Reply at 26; EX1060 ¶394

’491 Claim 1 – Adding More Electrodes from Choi

Two obvious options:

(1) use Kotanagi’s existing electrodes to obtain an ECG; or

Kotanagi

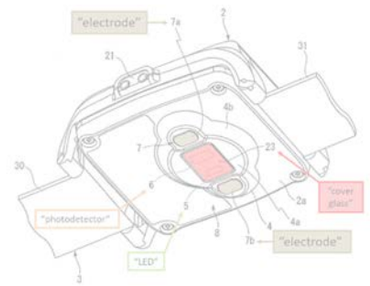

Choi, Schmid, Lapetina, teach ECG sensing with only two electrodes

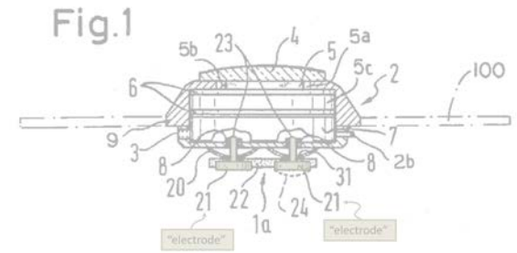

(2) add one or more additional electrodes to Kotanagi (as taught by Choi) and use both it / these and the existing electrodes to obtain an ECG.

Kotanagi + Choi

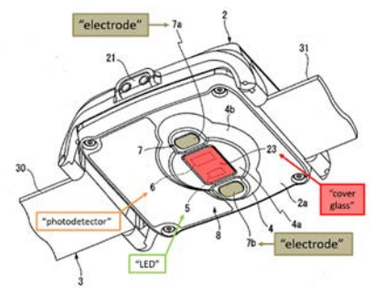

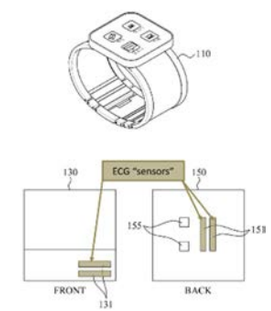

’491 Claim 1 – Adding More Electrodes from Choi

Apple argues that moving Kotanagi’s rear electrodes to a different surface would frustrate Kotanagi’s purpose of detecting skin contact.

- But Masimo proposes adding <u>more</u>, not moving existing, electrodes.
- The additional electrode would be for ECG, not for the skin contact purpose.

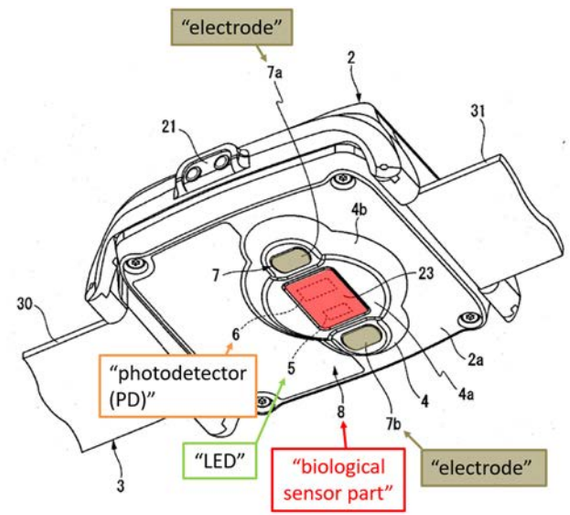

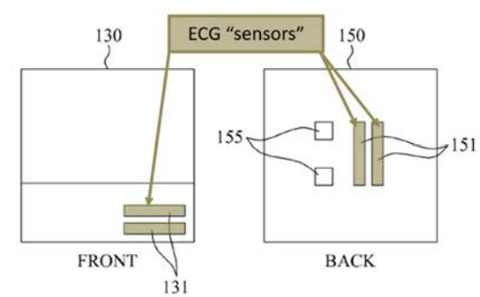

Pet. at 52; POR at 69–70; Reply at 33; EX1060 ¶408

’491 Claim 1 – Response to Eighth Sur-Reply Argument

The Petition includes the possibility of obtaining an ECG by using Kotanagi’s existing electrodes to trigger an ECG measurement and additional electrodes, as taught by Choi, to perform the ECG measurement of Claim 1.

> “[A] POSITA would have used Kotanagi’s existing electrodes and Choi’s teachings to ... add one or more additional electrodes to Kotanagi (as taught by Choi) and **use both it and the existing electrodes to obtain an ECG**.”
>
> “Kotanagi’s **rear electrodes** interact with the optical sensor to **achieve pulse measurement**.”
>
> “Kotanagi teaches a photoplethysmograms (PPG) **sensor comprising** a light source and a set of detectors (a photodetector and **two contact detection means**) **for performing a PPG measurement, as Kotanagi teaches optical measurement occurs upon contact detection**.”

’491 Pet. at 52, 51, 71

Topics

Obvious to:

1. Combine optical sensors and wireless charging coil (’491 Cl. 7)
   See also ’491 Cl. 14, ’783 Cls. 9, 15
2. Measure ECG using electrodes (’491 Cl. 1)
   See also ’491 Cls. 13, 17
3. Make cover disk-shaped (’783 Cl. 6)
4. Make disk-shaped cover convex to align with concave dock (’783 Cl. 12)
5. Magnetically couple watch with charging dock (’783 Cl. 16)
6. Make charging coil diameter smaller than biosensor module (’783 Cl. 11)
7. Combine Kotanagi, Honda (’783 Cl. 9, ’491 Cl. 7)

Grounds

’783

GROUND 1	Claims 9–11, 15, 19, and 20 are unpatentable as obvious in view of Kotanagi and Honda
GROUND 2	Claim 16 is unpatentable as obvious in view of Kotanagi and Honda, and optionally in further combination with Park
GROUND 3	Claims 1–7 and 14 are unpatentable as obvious in view of Kotanagi and Honda, and optionally in further combination with Kateraas
GROUND 4	Claims 12–13 and 17–18 are unpatentable as obvious in view of Kotanagi and Honda, Jabori, and optionally in further combination with Park
GROUND 5	Claims 3 and 14 are unpatentable as obvious in view of Kotanagi, Honda, Fraser, and optionally in further combination with Kateraas
GROUND 6	Claim 8 is unpatentable because it would have been obvious in view of Kotanagi and Honda, Jabori, and optionally in further combination with Kateraas and/or Park

’491

GROUND 1	Claims 7, 11, 14, and 16 are unpatentable as obvious in view of Kotanagi and Honda
GROUND 2	Claims 1–3, 5, 13, and 17 are unpatentable as obvious in view of Kotanagi, Honda, and Choi
GROUND 3	Claims 8 and 15 are unpatentable as obvious in view of Kotanagi, Honda, and Fraser
GROUND 4	Claim 9 is unpatentable as obvious in view of Kotanagi, Honda, and Orr
GROUND 5	Claims 12 and 18 are unpatentable as obvious in view of Kotanagi, Honda, and Park
GROUND 6	Claim 4 is unpatentable as obvious in view of Kotanagi, Honda, Choi, and Park
GROUND 7	Claims 10 and 19 are unpatentable as obvious in view of Kotanagi, Honda, and Jabori
GROUND 8	Claim 6 is unpatentable as obvious in view of Kotanagi, Honda, Choi, and Jabori

’783 Claim 6

Kotanagi:

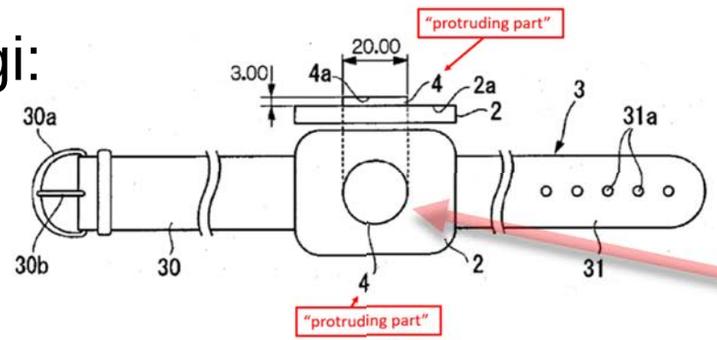

Honda:

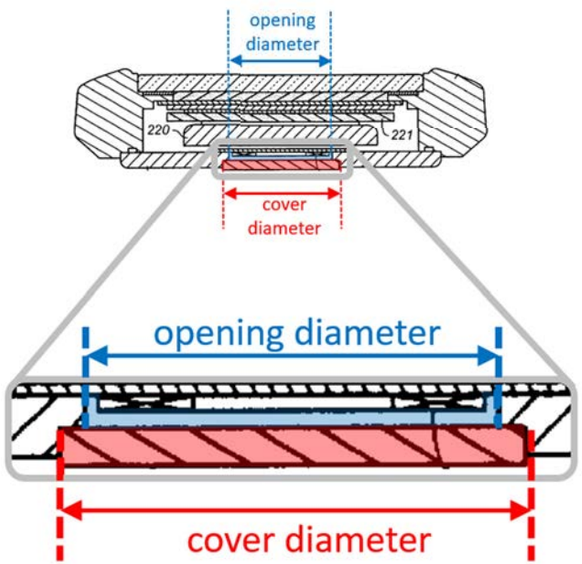

Claim 6

The electronic device of claim 1, wherein:

the ceramic cover is a disk having a disk diameter that is greater than an opening diameter of the second opening; and

. . .

Pet. at 77–80; EX1005 Fig. 8; EX1006 Fig. 2; EX1003 ¶¶224-229

’783 Claim 6

Honda:

- Standard electrical contacts are “weak in terms of waterproofness”

- Glass surface to which coils face provides “compact and waterproof” apparatus

- Waterproof up to five atmospheres

Claim 6 (cont’d)

. . .

the ceramic cover forms a water-tight seal with the housing along a perimeter of the ceramic cover.

Pet. at 79–80; '783 Reply at 35; EX1003 ¶¶224-229

’783 Claim 6 – Combination of Kotanagi and Honda

Kotanagi’s Fig. 8 teaches a disk-shaped protruding part covering the opening.

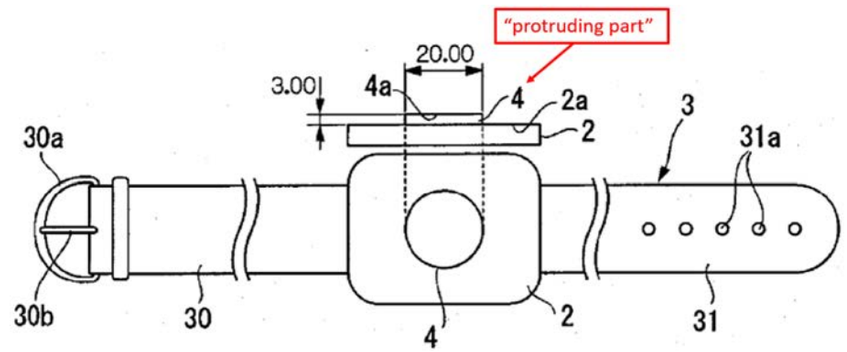

Honda suggests the disk can be a glass cover with the claimed diameter and seal.

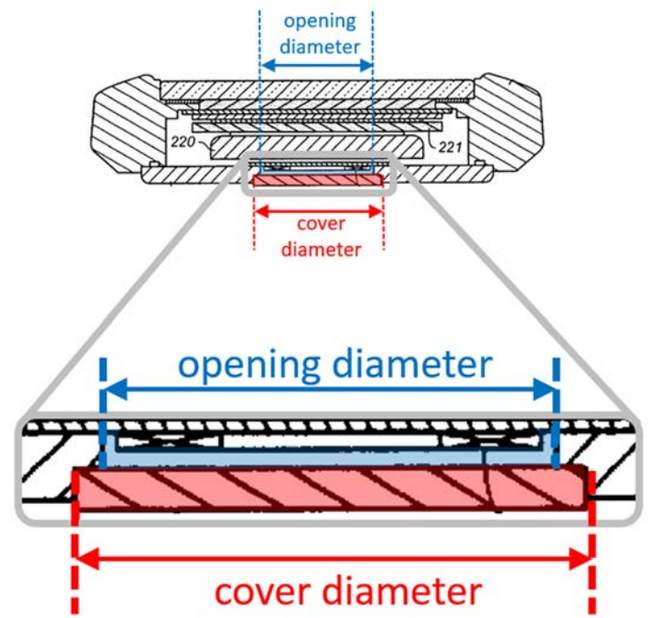

’783 Claim 6 – Response to First Sur-Reply Argument

Kotanagi’s Figure 8 embodiment has the same internal components (e.g., optical sensors) as Figure 5.

Figure 8 has different external components from Figure 5:

- Different-shaped (circular) protruding part covering the opening
- Rectangular cover not required
- Electrodes on circular protruding part not required

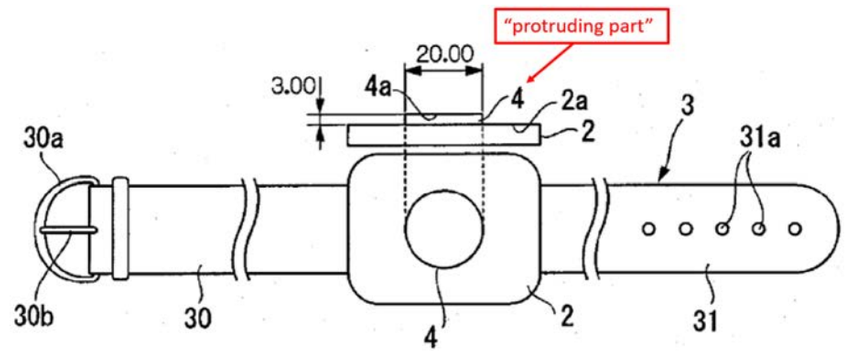

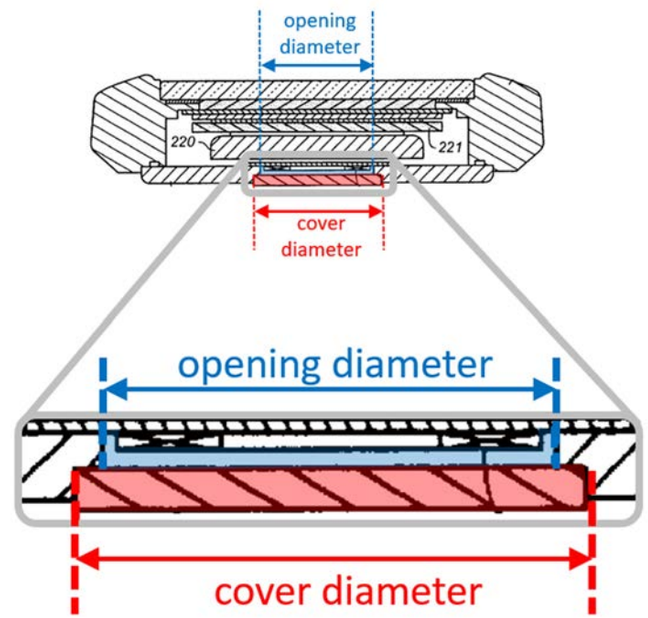

’783 Claim 6 – Response to Second Sur-Reply Argument

The protruding part of Kotanagi’s Figure 8 is a cover. It covers the opening.

Apple argues in its POR that because Figure 8 labels the disk a “protruding part 4,” it cannot also be a glass cover.

But that argument requires Apple to ***modify*** Figure 8 based on passages referring to Figures 1–7.

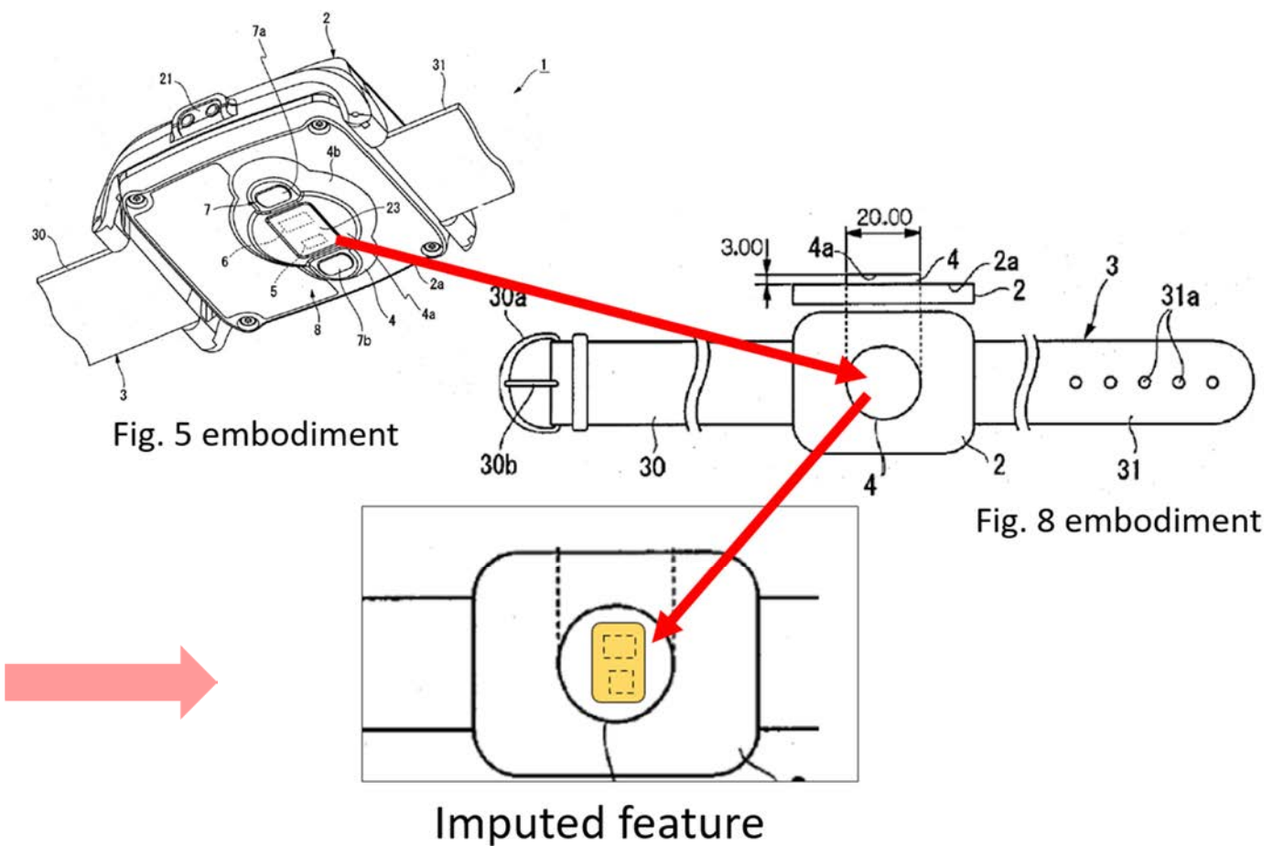

’783 Claim 6 – Response to Third Sur-Reply Argument

Neither claim 6 nor Kotanagi’s Figures 8–10 require electrodes on the circular protruding part.

Apple argues in its POR that, if the cover is the entire protruding part 4, it would have no room for electrodes.

Kotanagi’s Figures 11–13 show electrodes can be located on “ridges” that “come into contact . . . with the living body . . . before the protruding part 4.”

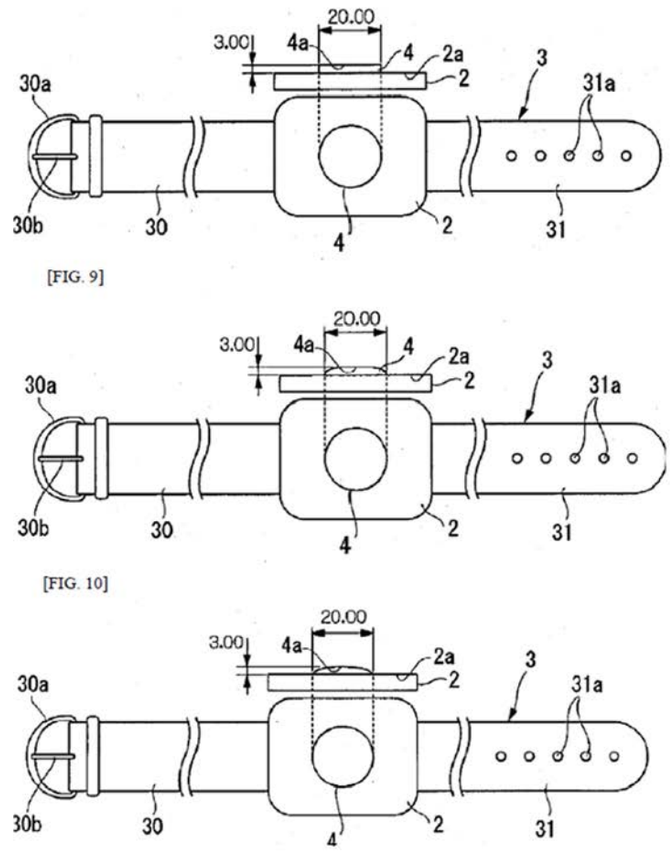

Figs. 8–10
No electrodes

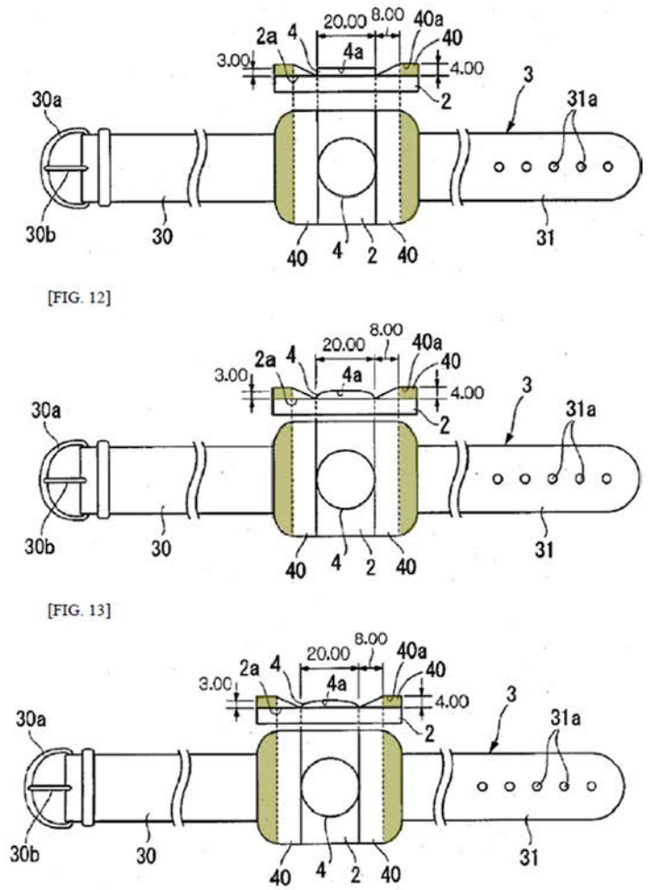

Figs. 11–13
Electrode-ready ridges

’783 Claim 6 – Response to Fourth Sur-Reply Argument

Petition

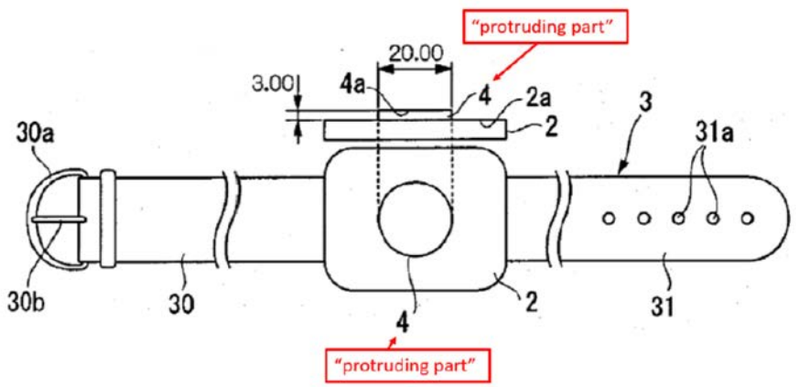

Id. at 16 (Fig. 8). This disk covers the opening and therefore has at least the same diameter, if not a larger diameter, than the opening. However, Kotanagi does not specifically state that this disk is a ceramic cover forming a water-tight seal.

In the same field of endeavor Honda teaches a cover with a diameter that is "greater than an opening diameter of the second opening":

Sur-Reply

Fourth, Masimo finally argues that Apple "ignores Honda's teaching of a round ceramic cover having the claimed diameter and forming a water-tight seal." Reply, 35. This misstates the Petition's reliance on Honda. The Petition relied on Honda for its alleged teachings of a water-tight seal—and not for the "cover is a disk" limitation. Specifically, after contending that the alleged protruding disk in Kotanagi is the claimed disk, the Petition stated that "***Kotanagi does not specifically state that this disk*** is a ceramic cover ***forming a water-tight seal***," as claim 6 additionally recites. Petition, 78-79 (emphasis added). The Petition leveraged Honda to address this purported deficiency, stating that Honda is in the "same field of endeavor" because it purportedly also "teaches a cover with" the

’783 Pet. at ; ’783 Sur-Reply at 25.

Topics

Obvious to:

1. Combine optical sensors and wireless charging coil (’491 Cl. 7)
   See also ’491 Cl. 14, ’783 Cls. 9, 15
2. Measure ECG using electrodes (’491 Cl. 1)
   See also ’491 Cls. 13, 17
3. Make cover disk-shaped (’783 Cl. 6)
4. Make disk-shaped cover convex to align with concave dock (’783 Cl. 12)
5. Magnetically couple watch with charging dock (’783 Cl. 16)
6. Make charging coil diameter smaller than biosensor module (’783 Cl. 11)
7. Combine Kotanagi, Honda (’783 Cl. 9, ’491 Cl. 7)

Grounds

’783

GROUND 1	Claims 9–11, 15, 19, and 20 are unpatentable as obvious in view of Kotanagi and Honda
GROUND 2	Claim 16 is unpatentable as obvious in view of Kotanagi and Honda, and optionally in further combination with Park
GROUND 3	Claims 1–7 and 14 are unpatentable as obvious in view of Kotanagi and Honda, and optionally in further combination with Kateraas
GROUND 4	Claims 12–13 and 17–18 are unpatentable as obvious in view of Kotanagi and Honda, Jabori, and optionally in further combination with Park
GROUND 5	Claims 3 and 14 are unpatentable as obvious in view of Kotanagi, Honda, Fraser, and optionally in further combination with Kateraas
GROUND 6	Claim 8 is unpatentable because it would have been obvious in view of Kotanagi and Honda, Jabori, and optionally in further combination with Kateraas and/or Park

’491

GROUND 1	Claims 7, 11, 14, and 16 are unpatentable as obvious in view of Kotanagi and Honda
GROUND 2	Claims 1–3, 5, 13, and 17 are unpatentable as obvious in view of Kotanagi, Honda, and Choi
GROUND 3	Claims 8 and 15 are unpatentable as obvious in view of Kotanagi, Honda, and Fraser
GROUND 4	Claim 9 is unpatentable as obvious in view of Kotanagi, Honda, and Orr
GROUND 5	Claims 12 and 18 are unpatentable as obvious in view of Kotanagi, Honda, and Park
GROUND 6	Claim 4 is unpatentable as obvious in view of Kotanagi, Honda, Choi, and Park
GROUND 7	Claims 10 and 19 are unpatentable as obvious in view of Kotanagi, Honda, and Jabori
GROUND 8	Claim 6 is unpatentable as obvious in view of Kotanagi, Honda, Choi, and Jabori

’783 Claim 12

Kotanagi:

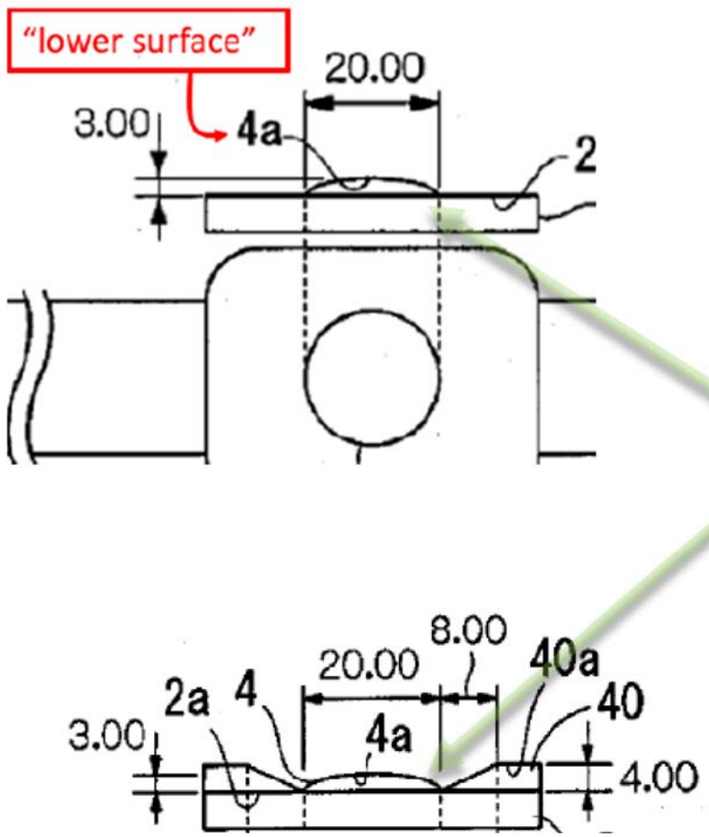

Claim 12

The wearable electronic device of claim 9, wherein:

the cover is a disk having a convex shape that protrudes away from the housing; and

. . .

Pet. at 87–88; '783 Reply at 35–36; EX1005, Figs. 10, 13; EX1003 ¶¶243-250; EX1060 ¶¶381-384

’783 Claim 12

Honda:

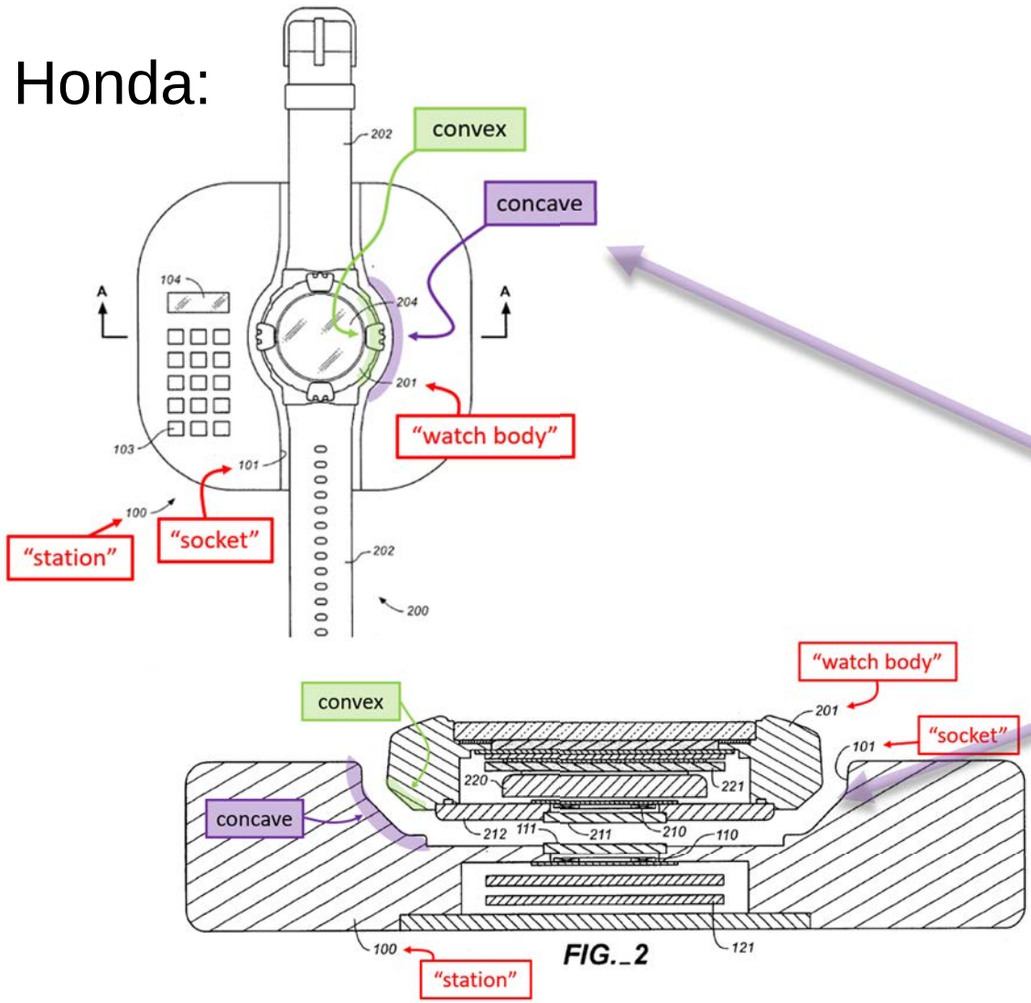

Claim 12

. . .

the convex shape is configured to facilitate alignment with a concave surface of an external inductive power transmitter dock.

Pet. at 88–89; EX1006, Figs. 1, 2; EX1003 ¶¶243-250; EX1060 ¶¶381-384

’783 Claim 12

<u>Claim 12</u>

. . .

the convex shape is configured to facilitate alignment with a concave surface of an external inductive power transmitter dock.

Kotanagi + Honda:

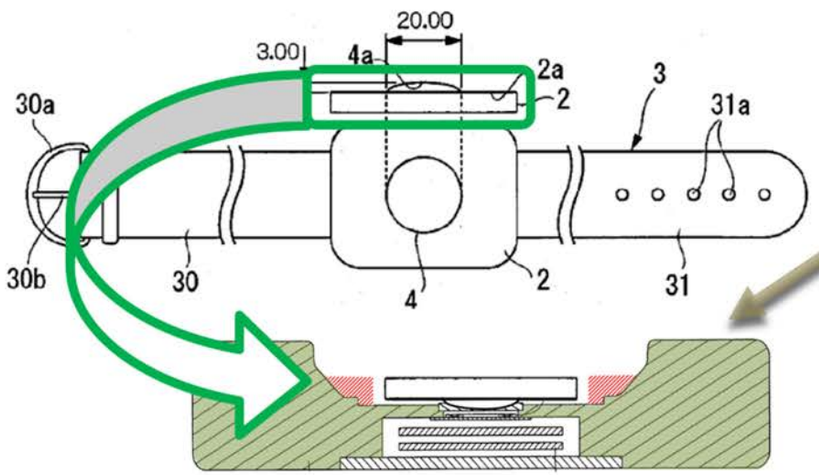

Park:

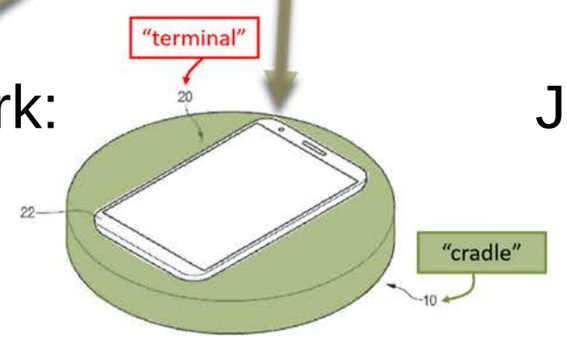

Jabori:

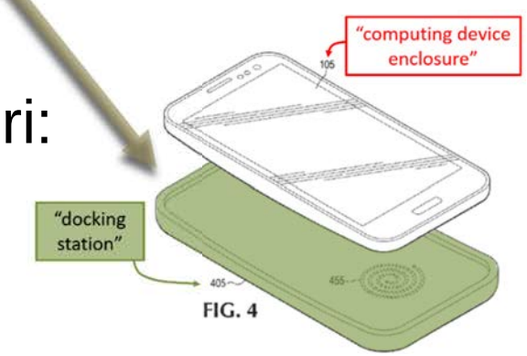

Pet. at 89–92; EX1005, Fig. 8, EX1006, Fig. 2; EX1017, Fig. 4; EX1015, Fig. 6; EX1003 ¶¶243-250; EX1060 ¶¶381-384

’783 Claim 12 – Apple Repeats Its Claim 6 Disk Arguments

Apple repeats claim 6 arguments that the combination lacks a disk-shaped cover.

Apple relies on the alleged lack of a disk-shaped cover to argue that the combination lacks a disk-shaped convex cover.

Apple’s claim 12 arguments fail for the same reasons as claim 6.

’783 POR at 73-74; ’783 Sur-Reply at 26–29; ’783 Pet. 87–93

Topics

Obvious to:

1. Combine optical sensors and wireless charging coil (’491 Cl. 7)
   See also ’491 Cl. 14, ’783 Cls. 9, 15
2. Measure ECG using electrodes (’491 Cl. 1)
   See also ’491 Cls. 13, 17
3. Make cover disk-shaped (’783 Cl. 6)
4. Make disk-shaped cover convex to align with concave dock (’783 Cl. 12)
5. Magnetically couple watch with charging dock (’783 Cl. 16)
6. Make charging coil diameter smaller than biosensor module (’783 Cl. 11)
7. Combine Kotanagi, Honda (’783 Cl. 9, ’491 Cl. 7)

Grounds

’783

GROUND 1	Claims 9–11, 15, 19, and 20 are unpatentable as obvious in view of Kotanagi and Honda
GROUND 2	Claim 16 is unpatentable as obvious in view of Kotanagi and Honda, and optionally in further combination with Park
GROUND 3	Claims 1–7 and 14 are unpatentable as obvious in view of Kotanagi and Honda, and optionally in further combination with Kateraas
GROUND 4	Claims 12–13 and 17–18 are unpatentable as obvious in view of Kotanagi and Honda, Jabori, and optionally in further combination with Park
GROUND 5	Claims 3 and 14 are unpatentable as obvious in view of Kotanagi, Honda, Fraser, and optionally in further combination with Kateraas
GROUND 6	Claim 8 is unpatentable because it would have been obvious in view of Kotanagi and Honda, Jabori, and optionally in further combination with Kateraas and/or Park

’491

GROUND 1	Claims 7, 11, 14, and 16 are unpatentable as obvious in view of Kotanagi and Honda
GROUND 2	Claims 1–3, 5, 13, and 17 are unpatentable as obvious in view of Kotanagi, Honda, and Choi
GROUND 3	Claims 8 and 15 are unpatentable as obvious in view of Kotanagi, Honda, and Fraser
GROUND 4	Claim 9 is unpatentable as obvious in view of Kotanagi, Honda, and Orr
GROUND 5	Claims 12 and 18 are unpatentable as obvious in view of Kotanagi, Honda, and Park
GROUND 6	Claim 4 is unpatentable as obvious in view of Kotanagi, Honda, Choi, and Park
GROUND 7	Claims 10 and 19 are unpatentable as obvious in view of Kotanagi, Honda, and Jabori
GROUND 8	Claim 6 is unpatentable as obvious in view of Kotanagi, Honda, Choi, and Jabori

’783 Claim 16 – receive coil is configured to receive power from an external inductive power transmitter dock . . .

Honda:

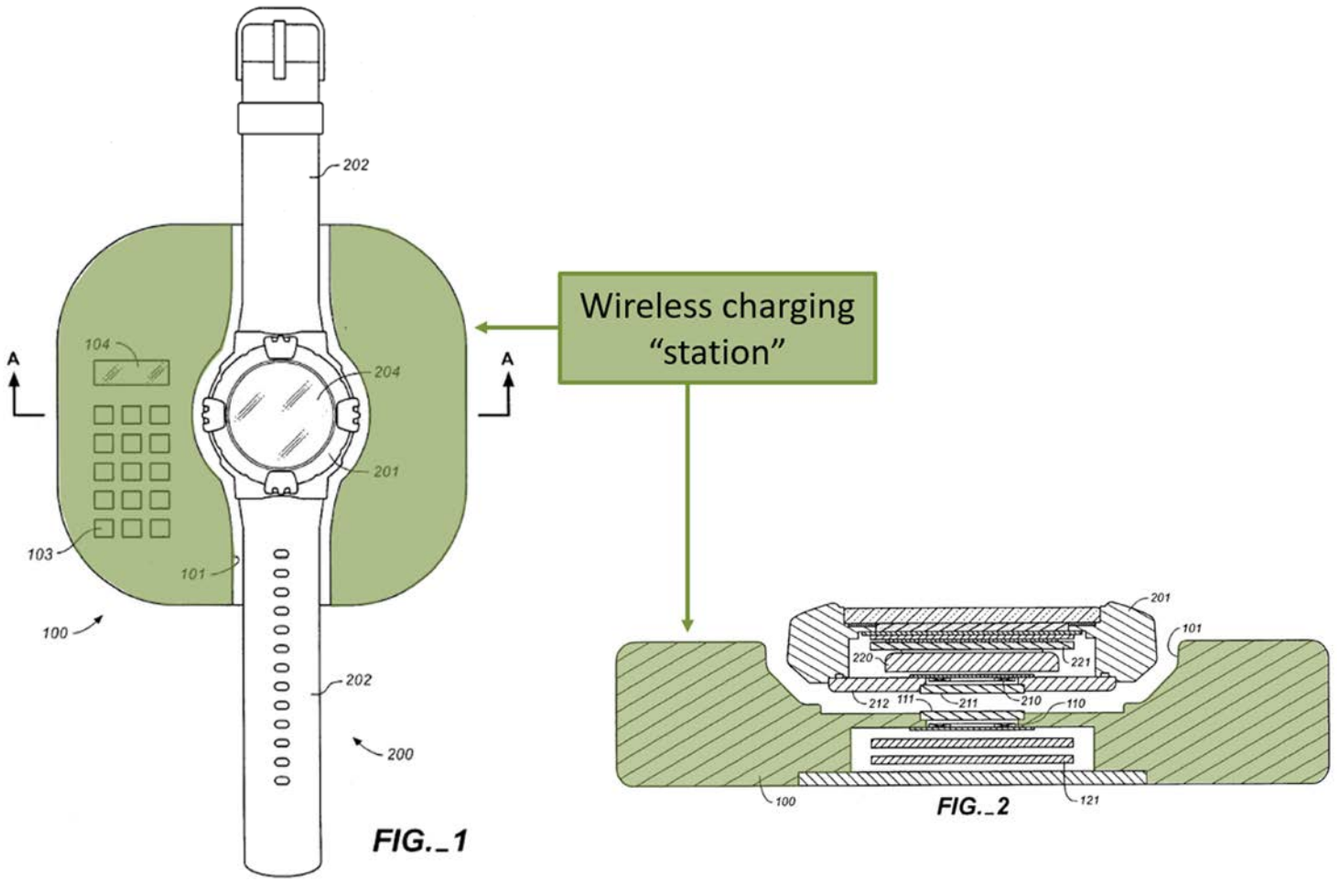

Pet. at 41–50; POR at 56–59; '783 Reply at 24, 28; *see* EX1005 (Fig. 7); EX1003 ¶¶171-179; EX1060 ¶¶368-374

’783 Claim 16 – electronic watch configured to magnetically couple with the external inductive power transmitter dock

Honda teaches coils are “magnetically coupled” for inductive charging.

In addition, Park discloses permanent magnets in the watch and dock for more precise alignment and securement:

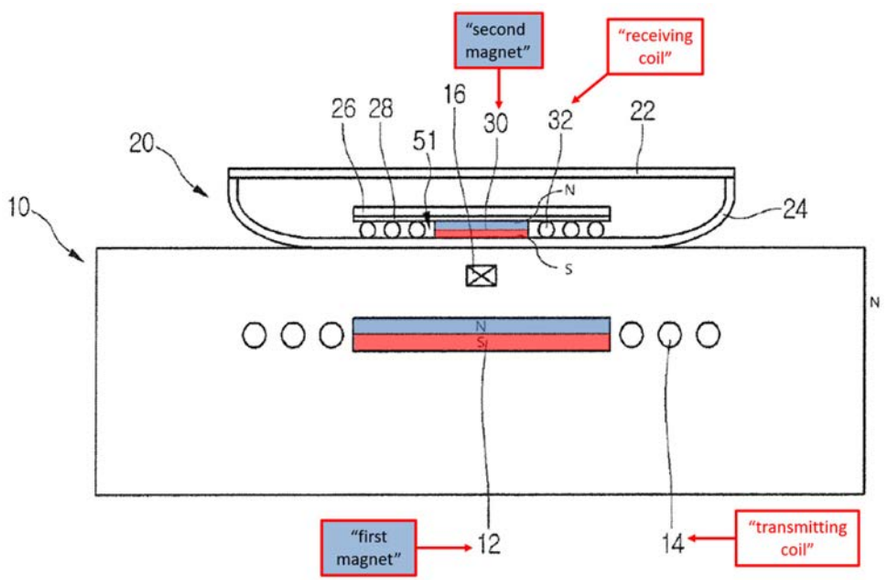

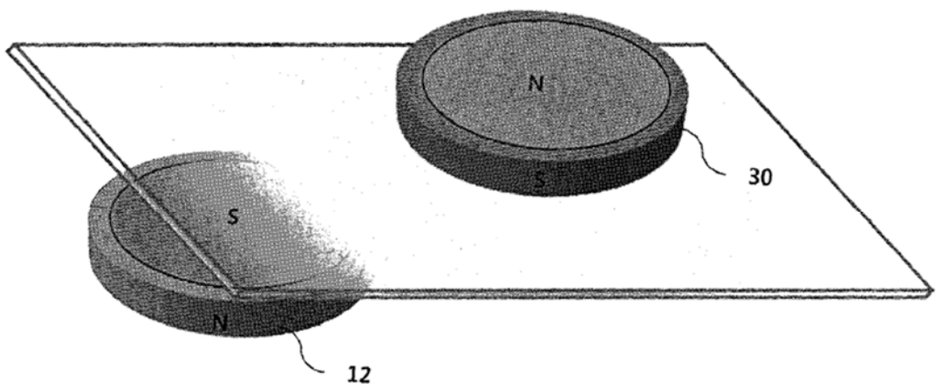

Pet. 53–57; '783 Reply at 28–32; EX1015 (Figs. 14, 16); EX1003 ¶¶171-179; EX1060 ¶¶368-374

’783 Claim 16 – electronic watch configured to magnetically couple with the external inductive power transmitter dock

Honda modifies the size of one of the coils to reduce negative effects of misalignment.

A POSITA would have also used Park’s magnet solution: “attractive force may be generated between the first magnet 12 and the second magnet 30” to optimize “wireless power transfer efficiency.”

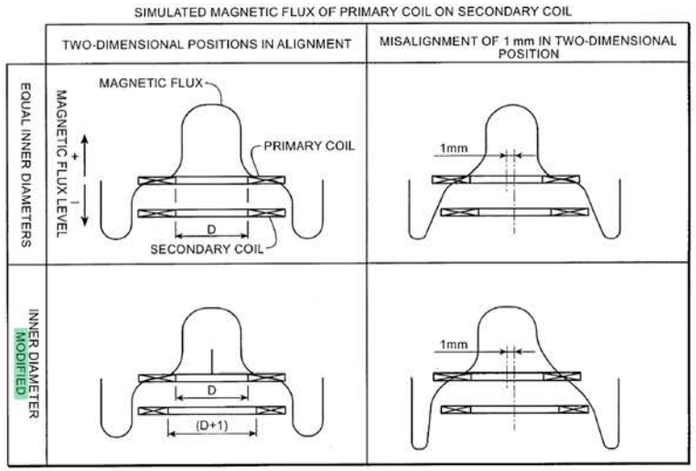

FIG._10

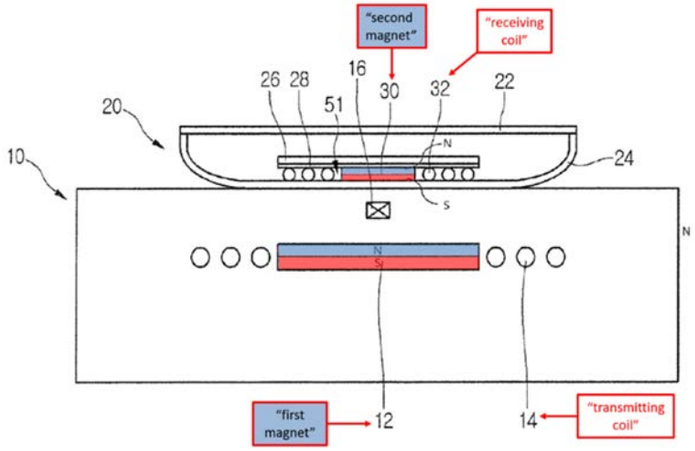

’783 Claim 16 – Response to First Sur-Reply Argument

Petition

A POSITA would have been motivated to combine these based at least on Honda’s description of a “socket” where the watch body is “seated in alignment” in Honda’s station. EX1006 6:4–11. Understanding the value and feasibility of alignment from both Honda and Park, a POSITA would have expected success in modifying Honda to include Park’s permanent magnets. *Id.* at 1:48–58. Motivation also stems from Park, which teaches disadvantages of existing wireless charging schemes (“limited distance . . . efficiency is somewhat low.”) EX1012 [0008]; EX1015 at 5. A POSITA would have used Park’s solution: permanent magnets to reduce the distance, “thereby improving wireless power transfer efficiency.” EX1012 [0192]; EX1015 at 32. EX1003 ¶¶177–178.

Sur-Reply

Confronted with this failure, Masimo’s Reply manufactures new obviousness theories and evidence, including (1) relying on Honda’s background section to now argue that charging stations have alignment issues, (2) asserting that Honda’s socket is deficient because it has wiggle room, and (3) identifying Park’s Figure 11 and its associated teaching to presumably illustrate that Park’s techniques would perform “further alignment.” *See* Reply, 29-31 (citing EX-1006, 1:52-53, FIG. 10).

'783 Pet. at 56; '783 Sur-reply at 18

’783 Claim 16 – Response to First Sur-Reply Argument

The Petition explained that Park’s magnets would provide better alignment than Honda’s socket alone.

Apple argues Honda solves misalignment without magnets.

But the portion of Honda cited by the Petition states “simply seating” a device into a “station” still results in a “modest degree of displacement.”

> Placing the two coils into alignment by simply seating the portable electronic apparatus into the station is difficult because the positions of the coils attached in the station and the portable electronic apparatus are required to be accurate. There is a need for an arrangement which is intrinsically less affected from a modest degree of displacement between the two coils.

POR at 62–63; '783 Reply at 29; *see* Pet. at 54, 55; EX1006, 1:48–58; EX1003 ¶¶171-179; EX1060 ¶¶369

’783 Claim 16 – Response to Second Sur-Reply Argument

Apple incorrectly argues that Honda’s structure alone would avoid “any wiggle or displacement.”

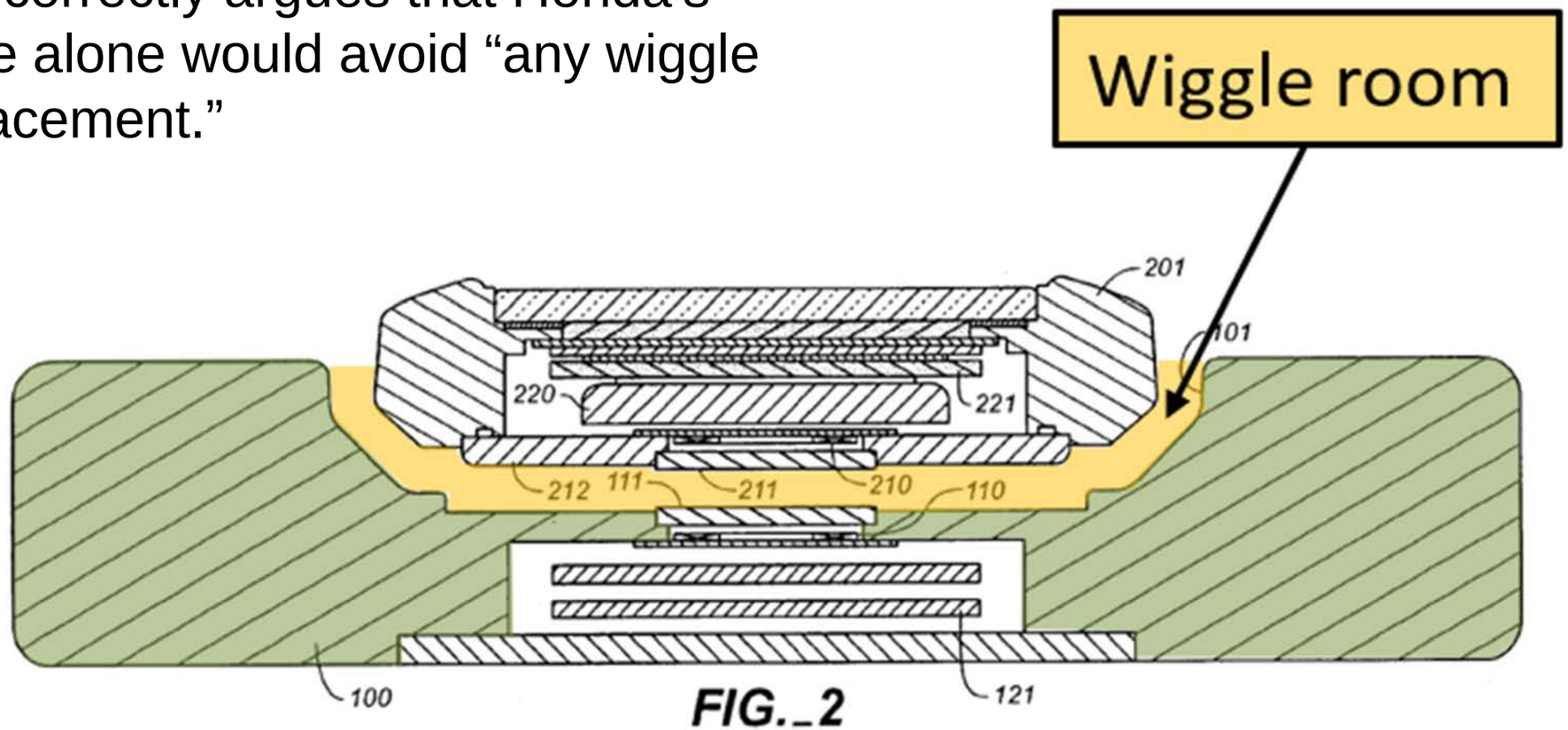

'783 Pet. at 56; '783 Sur-reply at 19; ’783 Reply at 29–32; EX1003 ¶¶171-179; EX1060 ¶¶368-374

’783 Claim 16 – Response to Third Sur-Reply Argument

Apple incorrectly argues that Honda’s method of mitigating negative effects of misalignment obviates any need to correct misalignment.

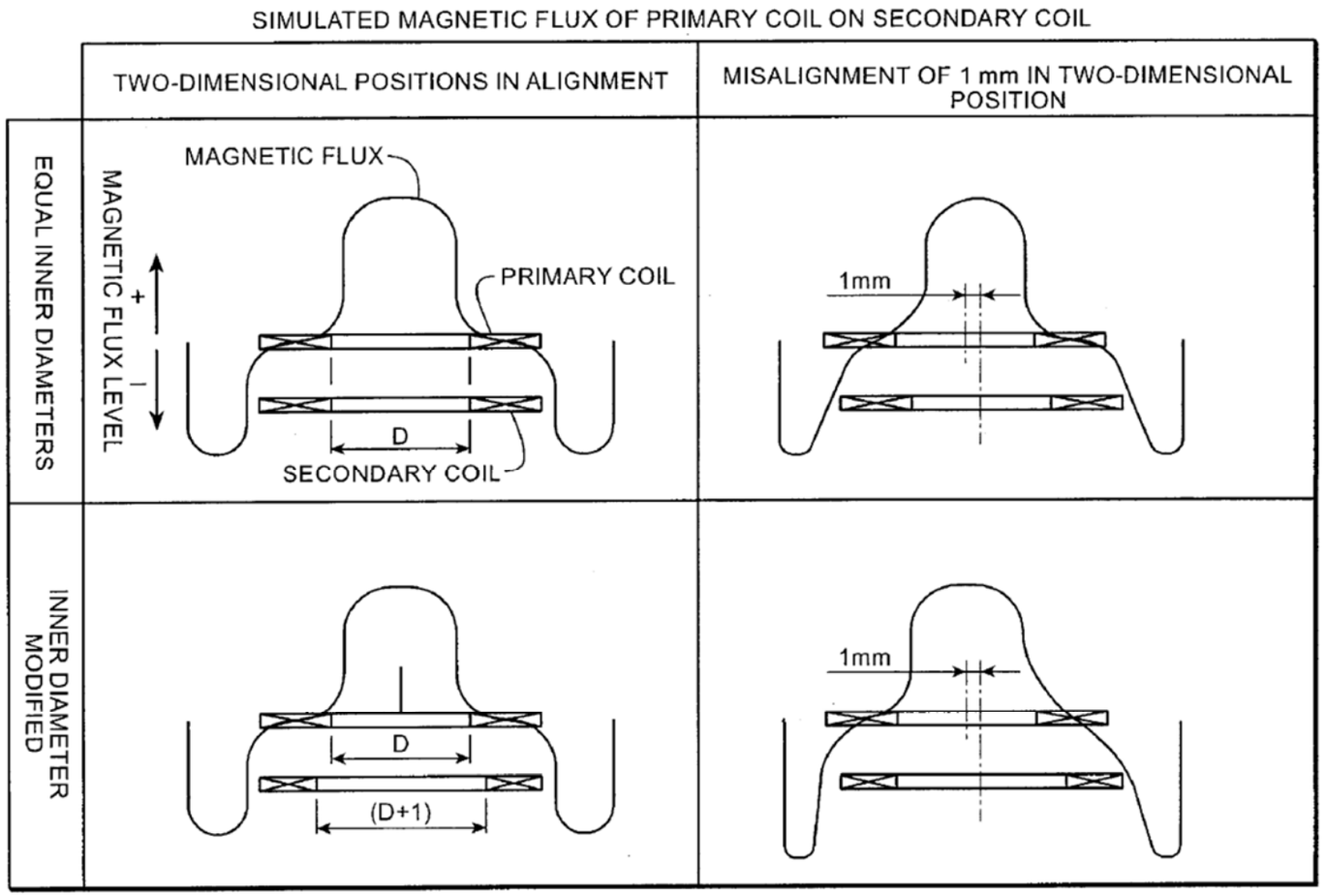

FIG._10

’783 Claim 16 – Response to Fourth Sur-Reply Argument

Park discloses alignment magnets that do not interfere with wireless charging

A POSITA would have known how to position the magnets or include shielding to address any interference

A POSITA would have known how to balance benefits against drawbacks

'783 Sur-reply at 20-21; ’783 Reply at 31–32; EX1015 at 6, 37; EX1003 ¶¶171-179; EX1060 ¶¶368-374

Topics

Obvious to:

1. Combine optical sensors and wireless charging coil (’491 Cl. 7)
   See also ’491 Cl. 14, ’783 Cls. 9, 15
2. Measure ECG using electrodes (’491 Cl. 1)
   See also ’491 Cls. 13, 17
3. Make cover disk-shaped (’783 Cl. 6)
4. Make disk-shaped cover convex to align with concave dock (’783 Cl. 12)
5. Magnetically couple watch with charging dock (’783 Cl. 16)
6. Make charging coil diameter smaller than biosensor module (’783 Cl. 11)
7. Combine Kotanagi, Honda (’783 Cl. 9, ’491 Cl. 7)

Grounds

’783

GROUND 1	Claims 9–11, 15, 19, and 20 are unpatentable as obvious in view of Kotanagi and Honda
GROUND 2	Claim 16 is unpatentable as obvious in view of Kotanagi and Honda, and optionally in further combination with Park
GROUND 3	Claims 1–7 and 14 are unpatentable as obvious in view of Kotanagi and Honda, and optionally in further combination with Kateraas
GROUND 4	Claims 12–13 and 17–18 are unpatentable as obvious in view of Kotanagi and Honda, Jabori, and optionally in further combination with Park
GROUND 5	Claims 3 and 14 are unpatentable as obvious in view of Kotanagi, Honda, Fraser, and optionally in further combination with Kateraas
GROUND 6	Claim 8 is unpatentable because it would have been obvious in view of Kotanagi and Honda, Jabori, and optionally in further combination with Kateraas and/or Park

’491

GROUND 1	Claims 7, 11, 14, and 16 are unpatentable as obvious in view of Kotanagi and Honda
GROUND 2	Claims 1–3, 5, 13, and 17 are unpatentable as obvious in view of Kotanagi, Honda, and Choi
GROUND 3	Claims 8 and 15 are unpatentable as obvious in view of Kotanagi, Honda, and Fraser
GROUND 4	Claim 9 is unpatentable as obvious in view of Kotanagi, Honda, and Orr
GROUND 5	Claims 12 and 18 are unpatentable as obvious in view of Kotanagi, Honda, and Park
GROUND 6	Claim 4 is unpatentable as obvious in view of Kotanagi, Honda, Choi, and Park
GROUND 7	Claims 10 and 19 are unpatentable as obvious in view of Kotanagi, Honda, and Jabori
GROUND 8	Claim 6 is unpatentable as obvious in view of Kotanagi, Honda, Choi, and Jabori

’783 Claim 11

The wearable electronic device of Claim 9, wherein:

the wireless charging receive coil has a coil diameter that is less than a diameter of the biosensor module; and

the wireless charging receive coil is configured to receive the wireless power through the biosensor module.

Pet. at 39; *see* '783 Reply at 1, 15–16; *see* EX1005 (Fig. 7)

’783 Claim 11 – the biosensor module can include a cover

In the example depicted in FIG. **7**, a biosensor module **710** is disposed in an opening formed in the rear surface of the housing **601**. In some embodiments, the biosensor module **710** includes the rear cover **608** and may also include a chassis or plate that facilitates attachment of the biosensor module **710** to the housing **601**. The chassis or plate or the cover sheet **608** may also include features or elements that facilitate a watertight seal between the biosensor module **710** and the housing **601**. For example, the rear cover **608** may include a shelf or flange that may be used to form a seal between the biosensor module **710** and the housing **601**. As described in more detail below with respect to FIG. **16**, the biosensor module **710** may include one or more light sources, one or more photodetectors, and one or more electrodes or conductive elements that are configured to detect and measure a physiological condition or property of the user.

Pet. at 14; '783 Reply at 3; EX1001 28:9–10; EX1003 ¶¶50-53, 141-148; EX1060 ¶¶363-366

’783 Claim 11 – the biosensor module can include a cover

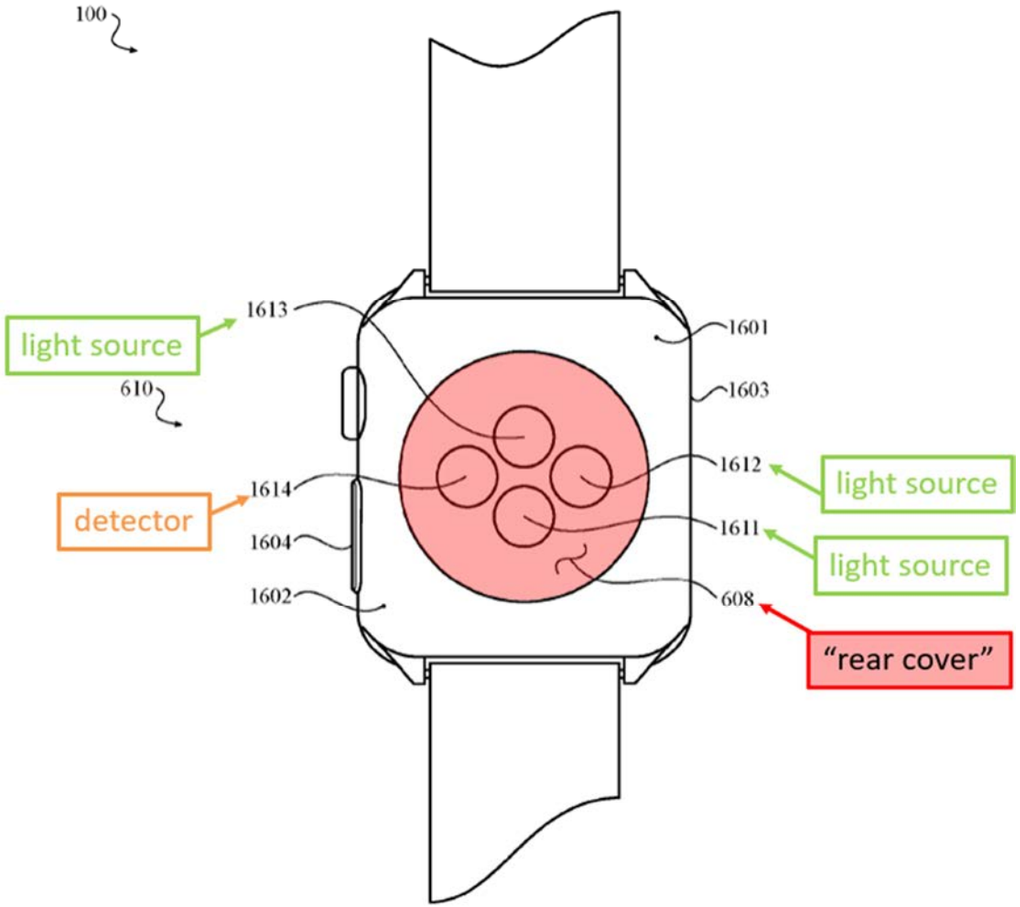

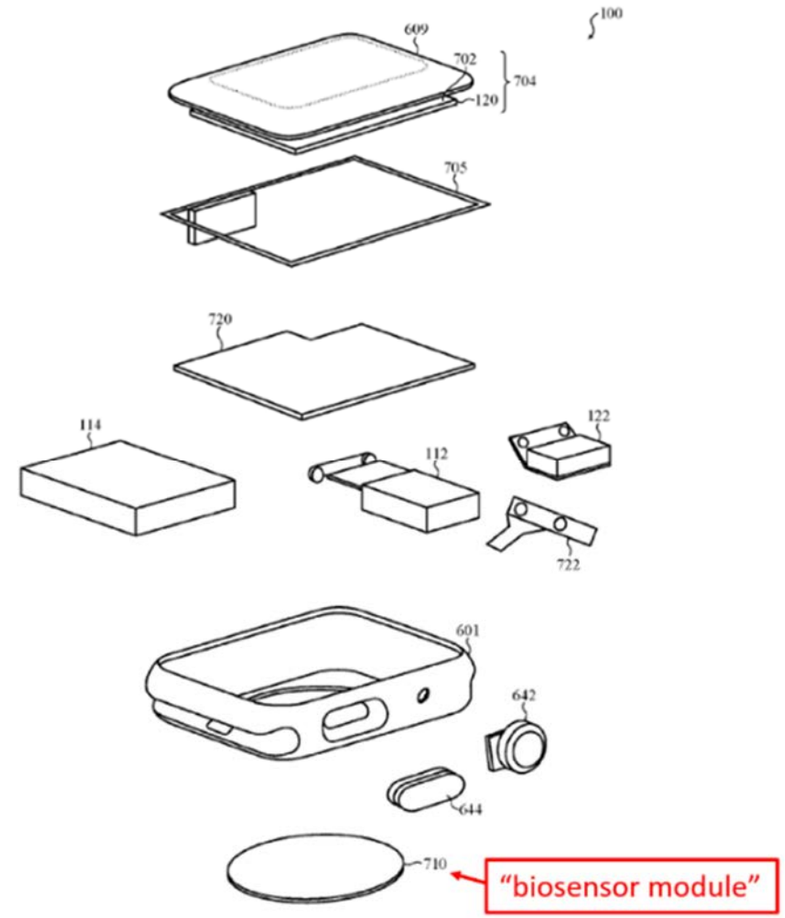

Pet. at 14; '783 Reply at 3–5, 28; EX1001 (Figs. 16, 7); EX1003 ¶¶50-53, 141-148; EX1060 ¶¶363-366

’783 Claim 11 – the biosensor module can include a cover

Apple argues the “cover” cannot be part of the “biosensor module” because they are listed separately in Claim 9.

Apple cites *Becton Dickinson* and *Engel* to argue they cannot be “one and the same.”

<u>Claim 9</u>

A wearable electronic device, comprising:

a housing comprising a bottom portion defining an opening;

a biosensor module aligned with the opening;

a wireless charging receive coil positioned within the housing and aligned with the opening;

a battery operably coupled to the wireless charging receive coil; and

a cover disposed over the biosensor module;

wherein:

the cover is configured to pass optical signals to and from the biosensor module; and

the cover is configured to pass wireless power to the wireless charging receive coil.

POR at 57; '783 Reply at 4, 5; EX1003 ¶¶50-53, 141-148; EX1060 ¶¶363-366

’783 Claim 11 – the biosensor module can include a cover

But Masimo does not assert that the biosensor module and cover are “one and the same.”

Becton Dickinson and *Engel*

> “do not create a *per se* rule that separately listed claim elements are distinct components, regardless of the intrinsic record.”

Google LLC v. EcoFactor, Inc., 92 F.4th 1049, 1058 (Fed. Cir. 2024)

Claim 9

A wearable electronic device, comprising:

a housing comprising a bottom portion defining an opening;

a biosensor module aligned with the opening;

a wireless charging receive coil positioned within the housing and aligned with the opening;

a battery operably coupled to the wireless charging receive coil; and

a cover disposed over the biosensor module;

wherein:

the cover is configured to pass optical signals to and from the biosensor module; and

the cover is configured to pass wireless power to the wireless charging receive coil.

'783 Reply at 5; EX1003 ¶¶50-53, 141-148; EX1060 ¶¶363-366

’783 Claim 11 – coil diameter less than biosensor module

Honda:

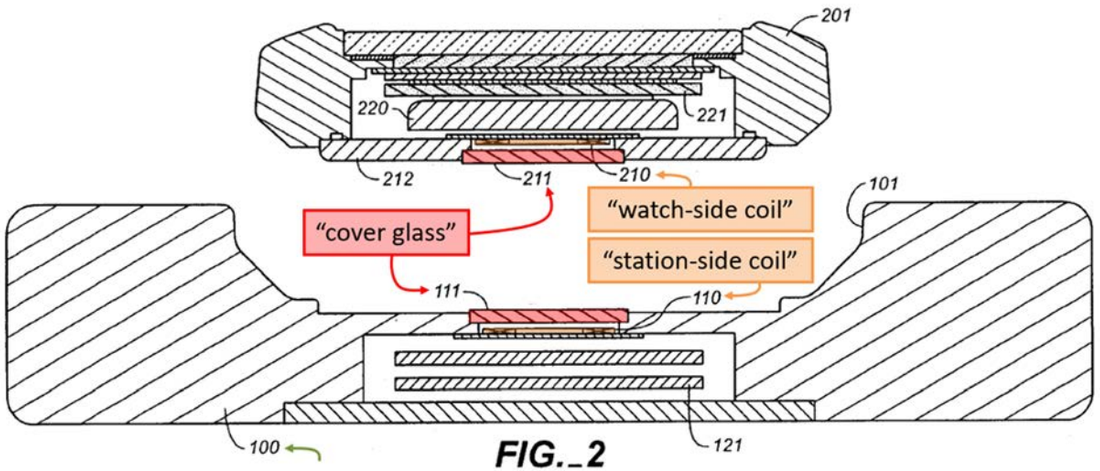

FIG._2

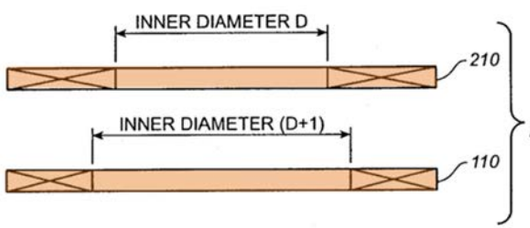

FIG._3

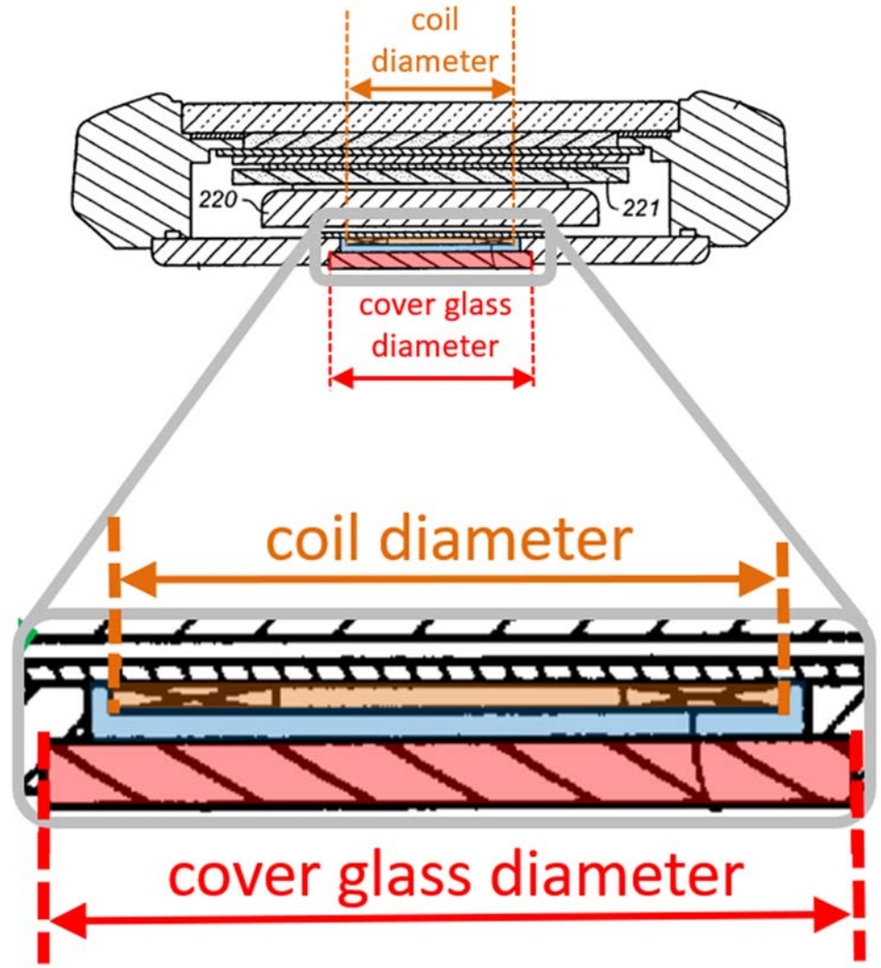

’783 Claim 11 – wireless power through biosensor module

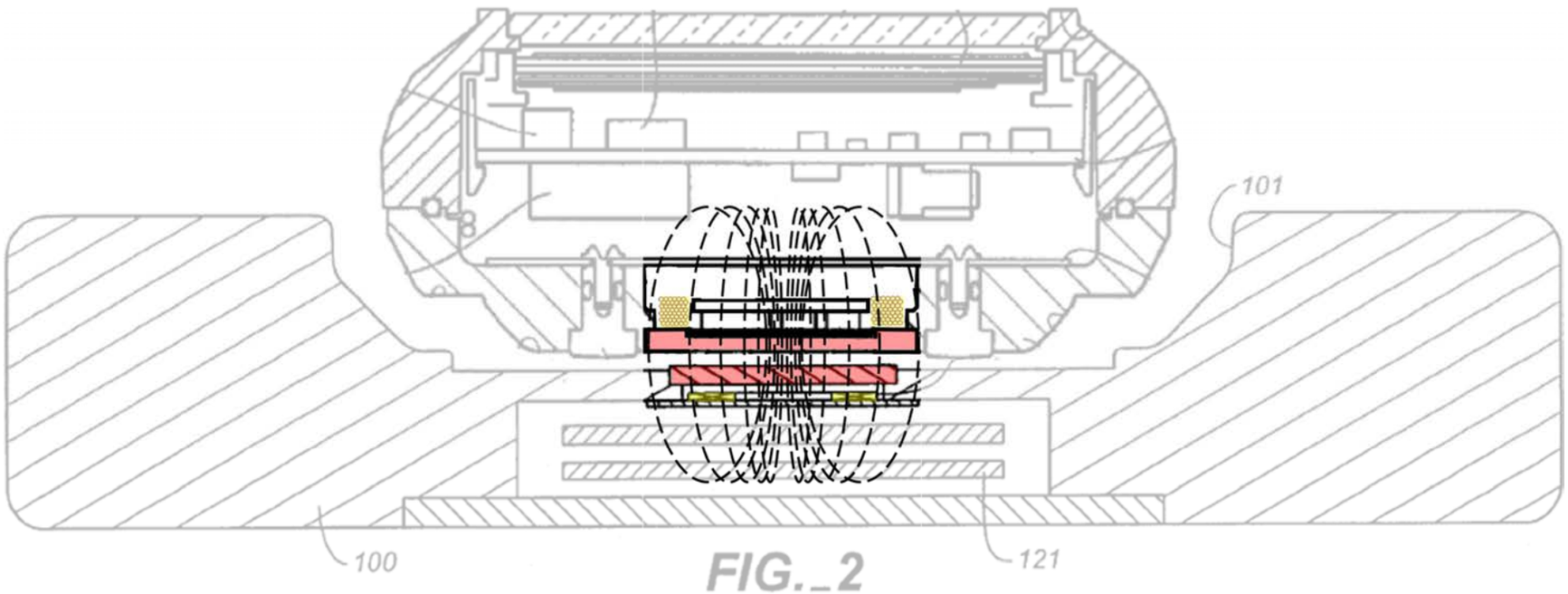

Pet. at 39–41; '783 Reply at 23–24, 28; *see* EX1005 (Fig. 7); EX1003 ¶¶50-53, 141-148; EX1060 ¶¶363-366

Topics

Obvious to:

1. Combine optical sensors and wireless charging coil (’491 Cl. 7)
   See also ’491 Cl. 14, ’783 Cls. 9, 15
2. Measure ECG using electrodes (’491 Cl. 1)
   See also ’491 Cls. 13, 17
3. Make cover disk-shaped (’783 Cl. 6)
4. Make disk-shaped convex cover to align with concave dock (’783 Cl. 12)
5. Magnetically couple watch with charging dock (’783 Cl. 16)
6. Make charging coil diameter smaller than biosensor module (’783 Cl. 11)
7. Combine Kotanagi, Honda (’783 Cl. 9, ’491 Cl. 7)

U.S. Patent No. 10,942,491
Claim 7: “A wearable electronic device”

(12) **United States Patent**
Rothkopf et al.

(10) **Patent No.: US 10,942,491 B2**
(45) **Date of Patent: Mar. 9, 2021**

(54) **WEARABLE ELECTRONIC DEVICE**

(71) Applicant: **Apple Inc.**, Cupertino, CA (US)

(72) Inventors: **Fletcher R. Rothkopf**, Los Altos, CA (US); **Jonathan Ive**, San Francisco, CA (US); **Julian Hoenig**, San Francisco, CA (US); **Rico Zorkendorfer**, San Francisco, CA (US)

(73) Assignee: **APPLE INC.**, Cupertino, CA (US)

(*) Notice: Subject to any disclaimer, the term of this patent is extended or adjusted under 35 U.S.C. 154(b) by 0 days.

(21) Appl. No.: **16/826,130**

(22) Filed: **Mar. 20, 2020**

(65) **Prior Publication Data**

US 2020/0233380 A1 Jul. 23, 2020

Related U.S. Application Data

(63) Continuation of application No. 15/261,917, filed on Sep. 10, 2016, now Pat. No. 10,627,783, and a
(Continued)

(51) **Int. Cl.**
G04G 17/02 (2006.01)
A61B 5/0295 (2006.01)
(Continued)

(52) **U.S. Cl.**
CPC ***G04G 17/02*** (2013.01); ***A61B 5/0205*** (2013.01); ***A61B 5/0261*** (2013.01);
(Continued)

(58) **Field of Classification Search**
None
See application file for complete search history.

(56) **References Cited**

U.S. PATENT DOCUMENTS

2,237,860 A 4/1941 Bolle
2,288,215 A 6/1942 Taubert et al.
(Continued)

FOREIGN PATENT DOCUMENTS

CH 188892 8 1/1937
CN 1302740 9/2001
(Continued)

OTHER PUBLICATIONS

Author Unknown, “Desirable Android Wear smartwatch from LG,” Gulf News, Dubai, 3 pages, Jan. 30, 2015.
(Continued)

Primary Examiner — Brian T Gedeon
(74) *Attorney, Agent, or Firm* — Brownstein Hyatt Farber Schreck, LLP

(57) **ABSTRACT**

A consumer product that is a portable and, in some cases, a wearable electronic device. The wearable electronic device may have functionalities including: keeping time; monitoring a user’s physiological signals and providing health-related information based on those signals; communicating with other electronic devices or services; visually depicting data on a display; gather data form one or more sensors that may be used to initiate, control, or modify operations of the device; determine a location of a touch on a surface of the device and/or an amount of force exerted on the device, and use either or both as input.

19 Claims, 26 Drawing Sheets

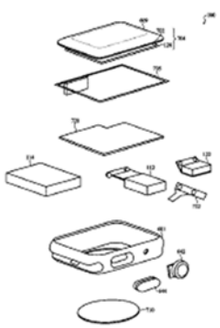

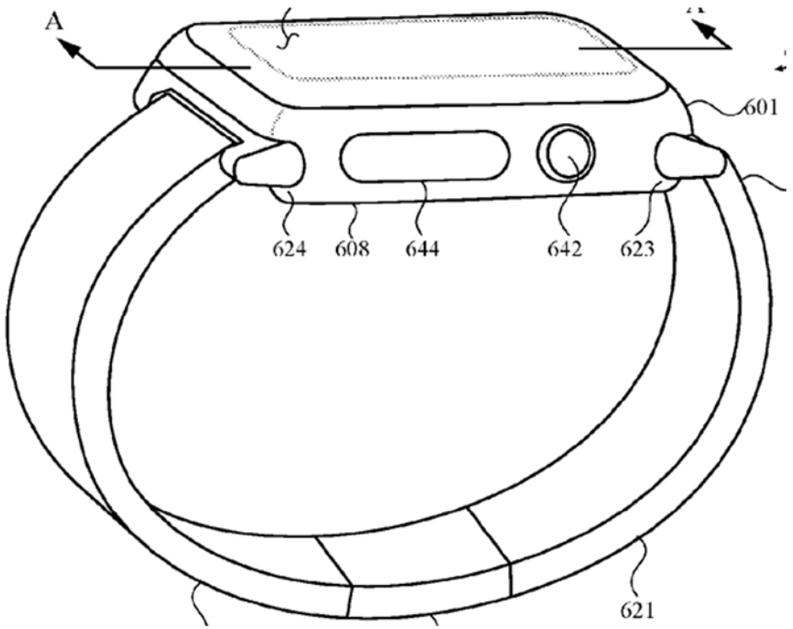

’491 Pet. at 5; EX1001 (Fig. 6)

"a housing formed from a conductive material and defining a first opening opposite to a second opening"

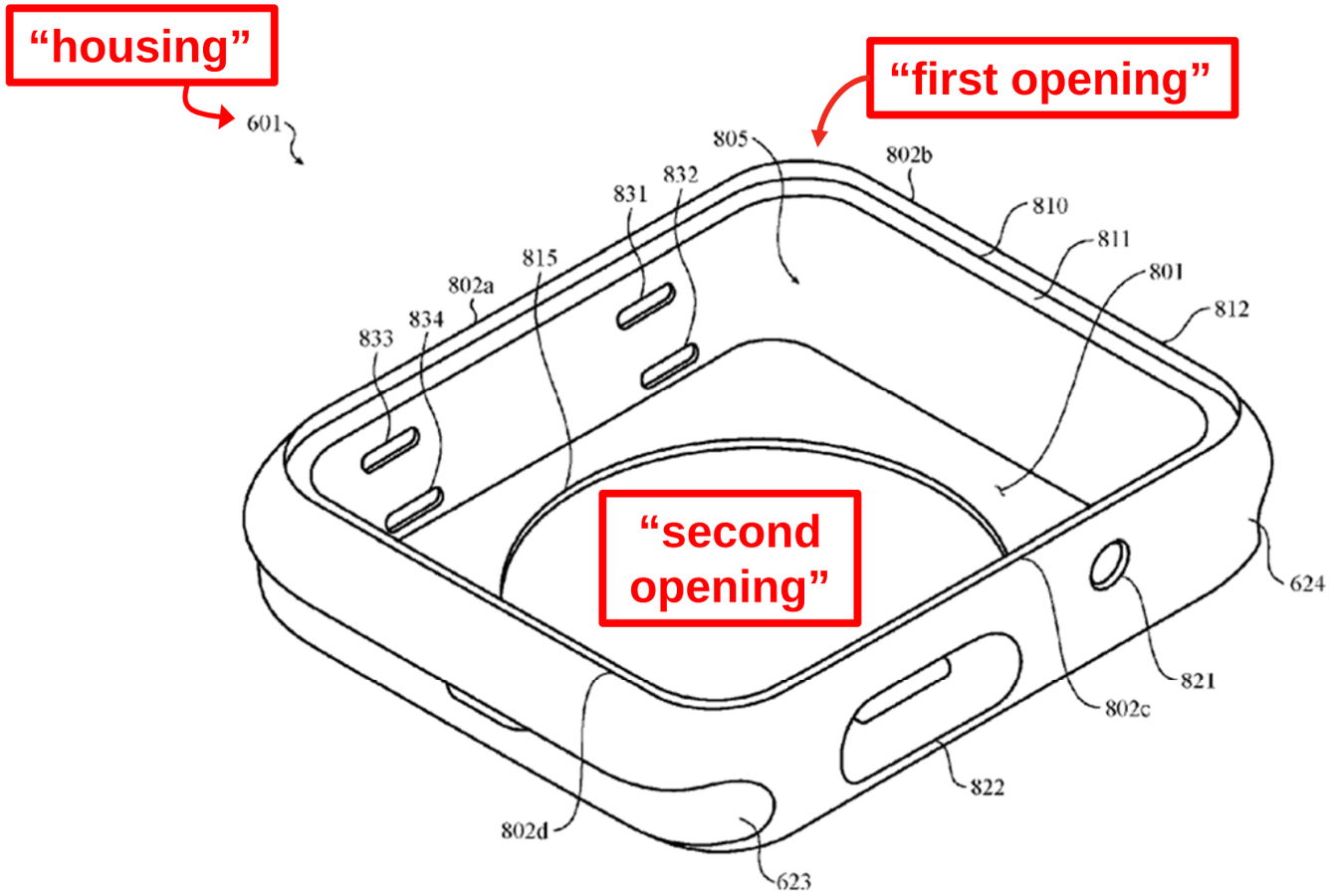

FIG. 8

"[A]n opening or aperture **815** may be formed in the bottom portion **801** of the housing **601**."

See '491 Pet. Claim Listing p. 5; EX1001 (Fig. 8), 30:65–66

“a band attached to the housing and configured to secure the wearable electronic device to a user”

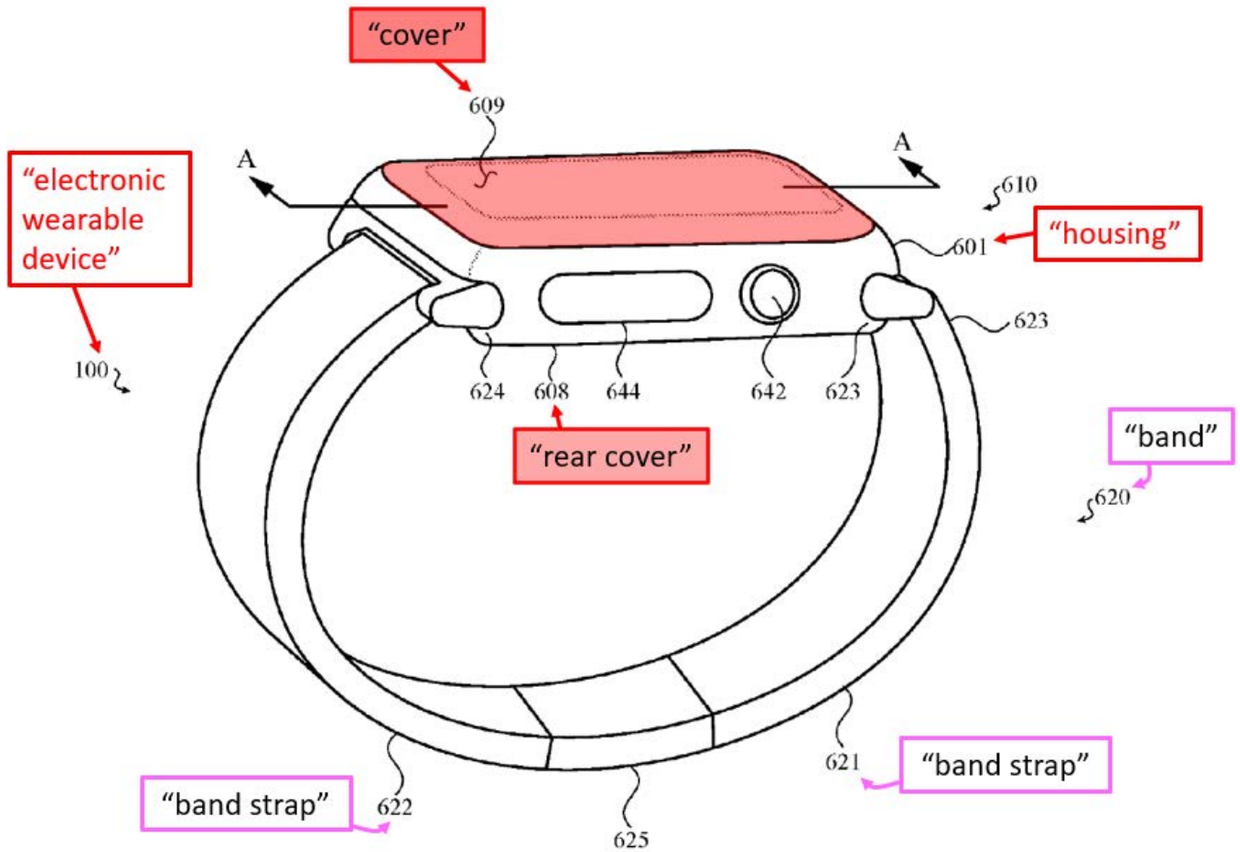

’491 Pet. at 5; EX1001 (Fig. 6)

“a display positioned in the first opening”

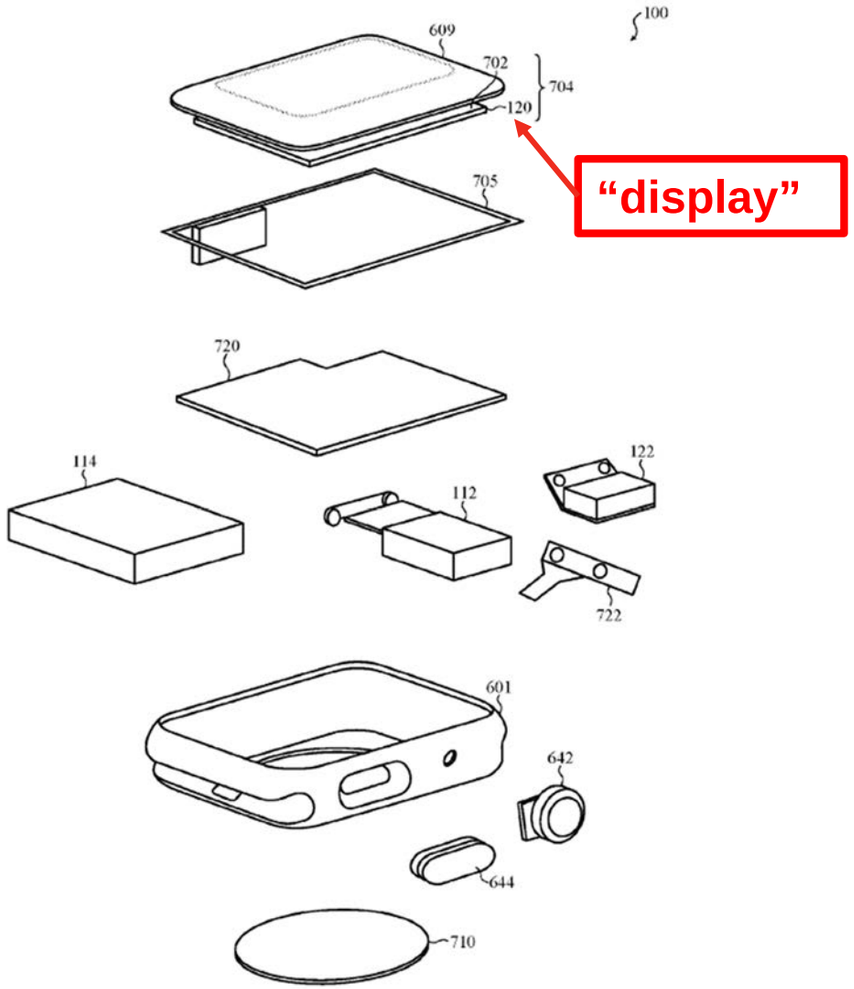

“[T]he device **100** includes a display (item **120** of FIG. 2) that is disposed at least partially within an opening or cavity defined within a top portion of the housing **601**...”

’491 Pet. at 5, 33; EX1001 (Fig. 7), 21:29–32

“a cover comprising a non-conductive material and positioned over the second opening, the cover forming a portion of an exterior surface of the wearable electronic device”

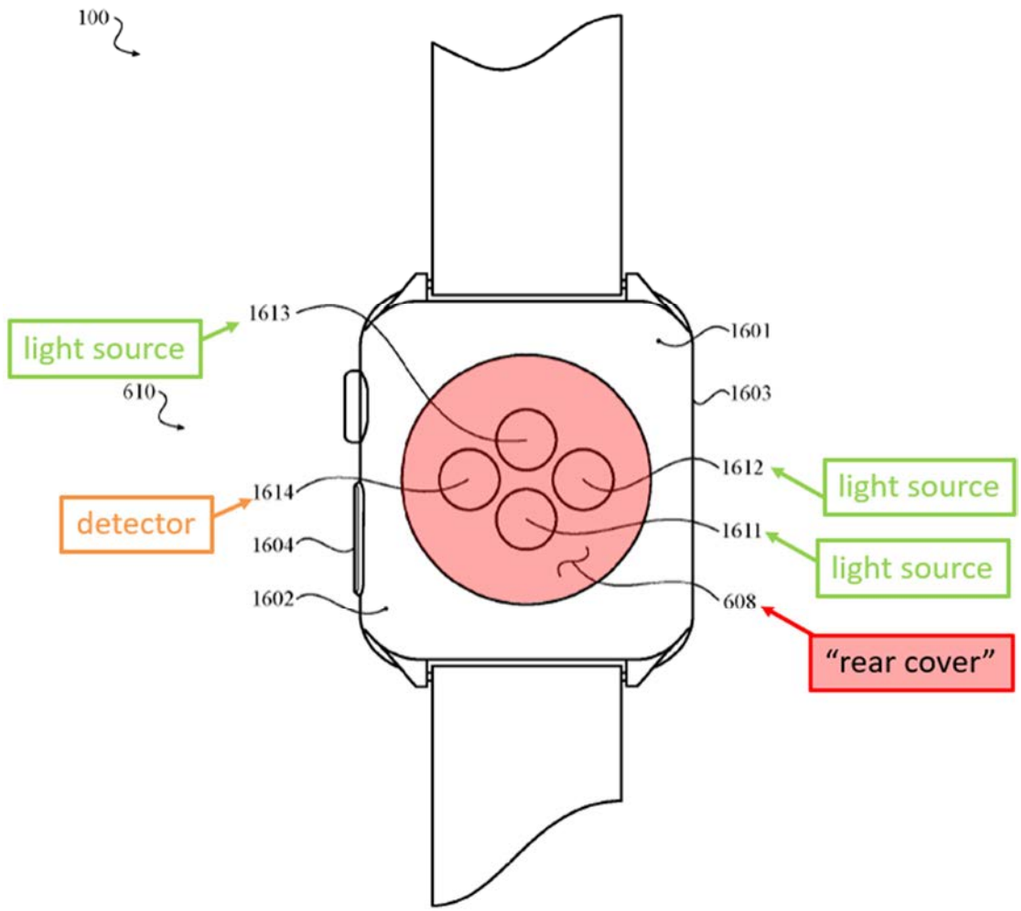

’491 Pet. at 10; EX1001 (Fig. 16)

“a biosensor module positioned below the cover configured to pass an optical signal through a window defined within the non-conductive material of the cover”

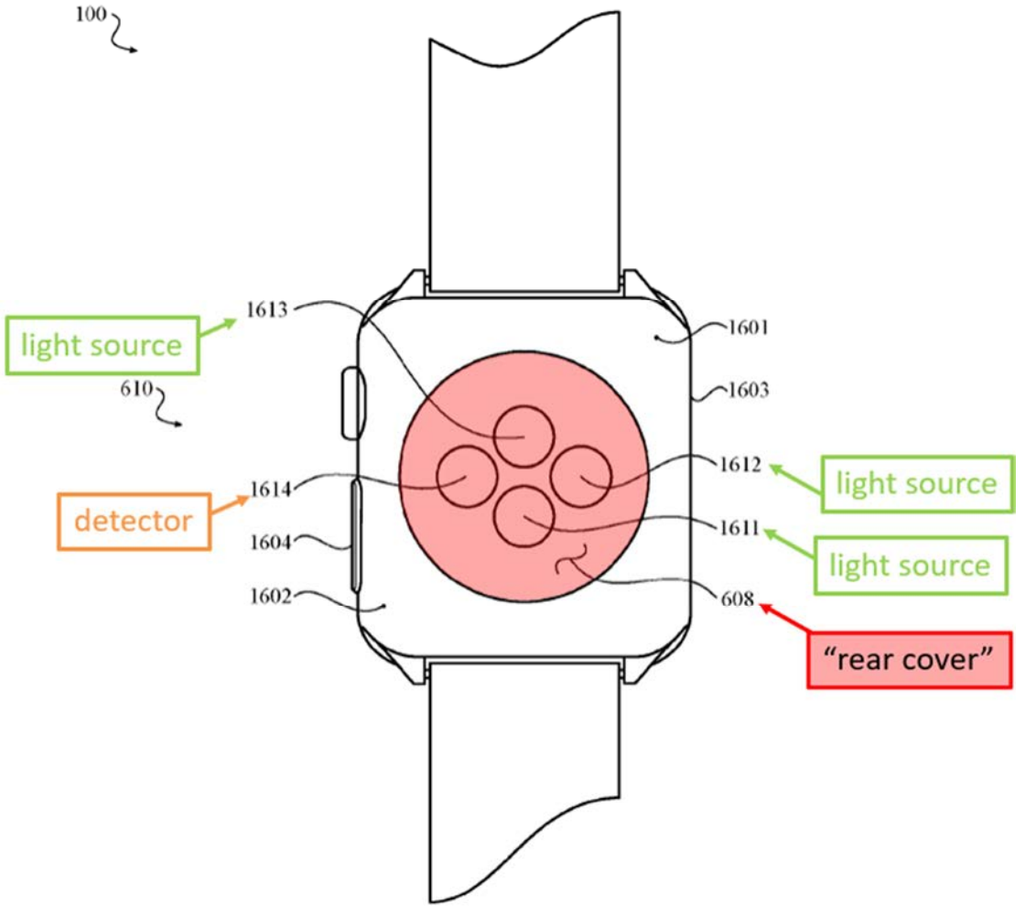

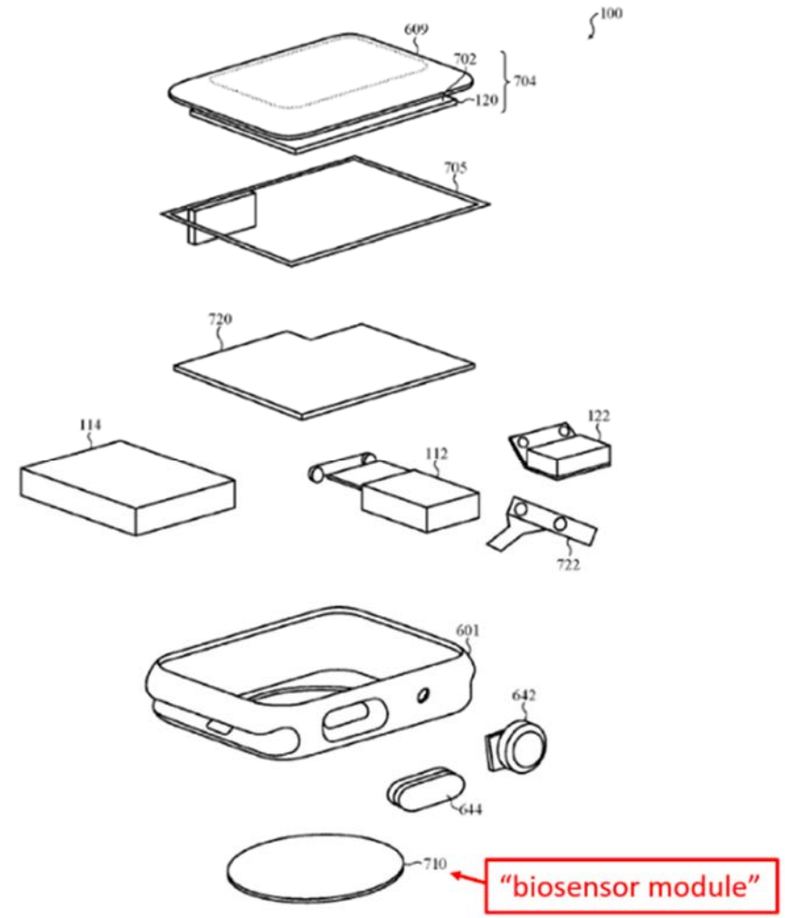

’491 Pet. at 5, 10; EX1001 (Figs. 16, 7)

"a wireless charging receive coil aligned with the second opening and below the cover, the wireless charging receive coil configured to inductively couple to an external wireless charging device through the non-conductive material of the cover"

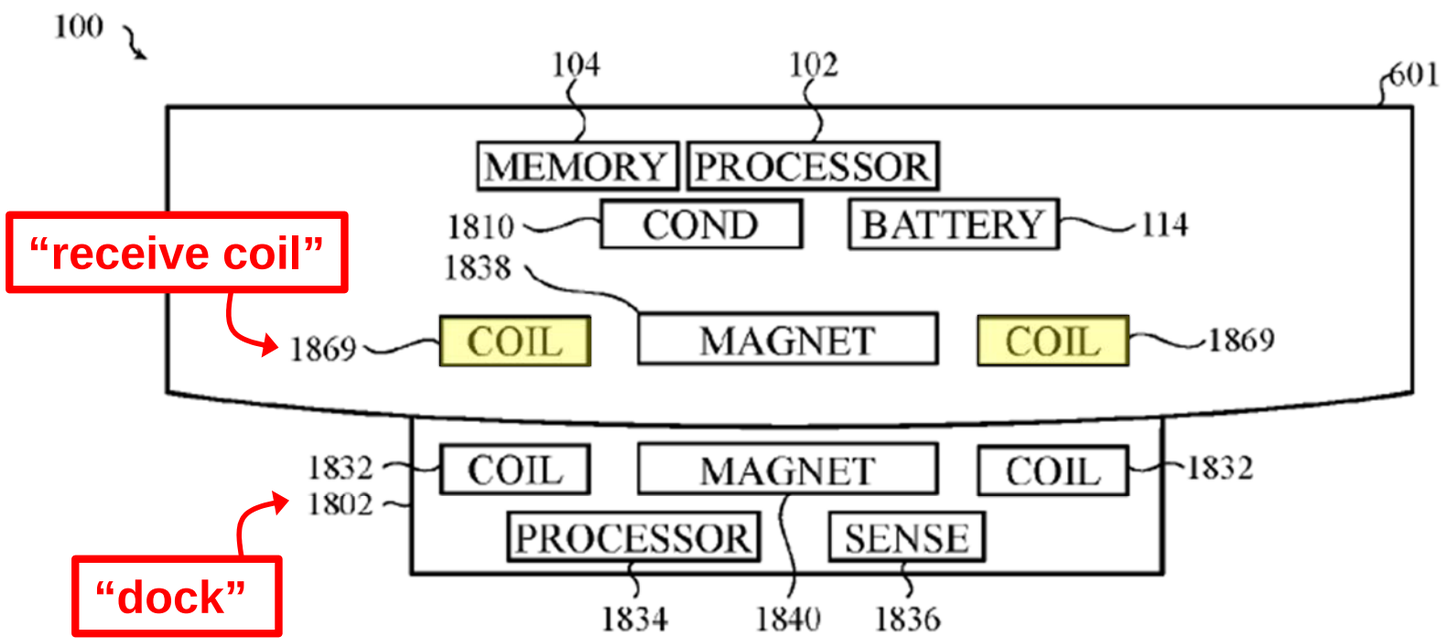

FIG. 19

"The receive coil **1869** may receive power wirelessly from the dock **1802**"

See POR at 9; EX1001 (Fig. 19), 44:41–43

U.S. Patent No. 10,627,783
Claim 9: “A wearable electronic device . . .”

(12) **United States Patent**
Rothkopf et al.

(10) **Patent No.: US 10,627,783 B2**
(45) **Date of Patent: Apr. 21, 2020**

(54) **WEARABLE ELECTRONIC DEVICE**

(71) Applicant: **Apple Inc.**, Cupertino, CA (US)

(72) Inventors: **Fletcher R. Rothkopf**, Cupertino, CA (US); **Jonathan Ive**, San Francisco, CA (US); **Julian Hoenig**, San Francisco, CA (US); **Rico Zorkendorfer**, San Francisco, CA (US)

(73) Assignee: **APPLE INC.**, Cupertino, CA (US)

(*) Notice: Subject to any disclaimer, the term of this patent is extended or adjusted under 35 U.S.C. 154(b) by 0 days.

(21) Appl. No.: **15/261,917**

(22) Filed: **Sep. 10, 2016**

(65) **Prior Publication Data**

US 2016/0378071 A1 Dec. 29, 2016

Related U.S. Application Data

(63) Continuation of application No. 14/842,617, filed on Sep. 1, 2015.

(Continued)

(51) **Int. Cl.**
G04G 17/02 (2006.01)
G04G 21/02 (2010.01)

(Continued)

(52) **U.S. Cl.**
CPC ***G04G 17/02*** (2013.01); ***A61B 5/0205*** (2013.01); ***A61B 5/0261*** (2013.01); ***A61B 5/0295*** (2013.01); ***A61B 5/14551*** (2013.01); ***A61B 5/681*** (2013.01); ***G04B 39/02*** (2013.01); ***G04G 21/025*** (2013.01); ***G06F 1/163*** (2013.01);

(Continued)

(58) **Field of Classification Search**
None
See application file for complete search history.

(56) **References Cited**

U.S. PATENT DOCUMENTS

2,237,860 A 4/1941 Bolle
2,288,215 A 6/1942 Taubert et al.

(Continued)

FOREIGN PATENT DOCUMENTS

CH 1888928 1/1937
CN 1302740 9/2001

(Continued)

OTHER PUBLICATIONS

Author Unknown, “Desirable Android Wear smartwatch from LG,” Gulf News, Dubai, 3 pages, Jan. 30, 2015.

(Continued)

Primary Examiner — Brian T Gedeon
(74) *Attorney, Agent, or Firm* — Brownstein Hyatt Farber Schreck, LLP

(57) **ABSTRACT**

A consumer product that is a portable and, in some cases, a wearable electronic device. The wearable electronic device may have functionalities including: keeping time; monitoring a user’s physiological signals and providing health-related information based on those signals; communicating with other electronic devices or services; visually depicting data on a display; gather data form one or more sensors that may be used to initiate, control, or modify operations of the device; determine a location of a touch on a surface of the device and/or an amount of force exerted on the device, and use either or both as input.

20 Claims, 26 Drawing Sheets

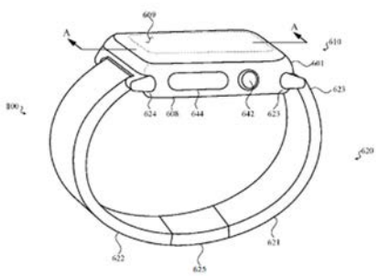

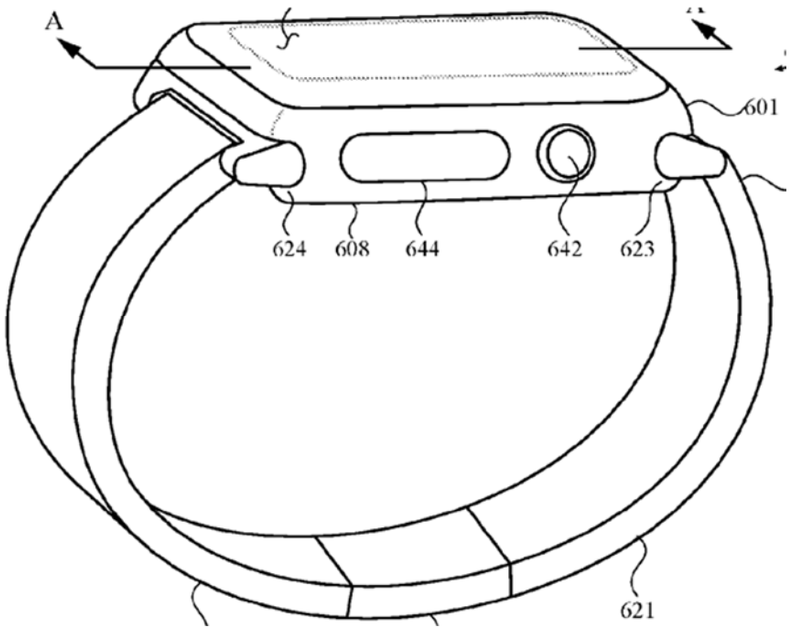

“a housing comprising a bottom portion defining an opening”

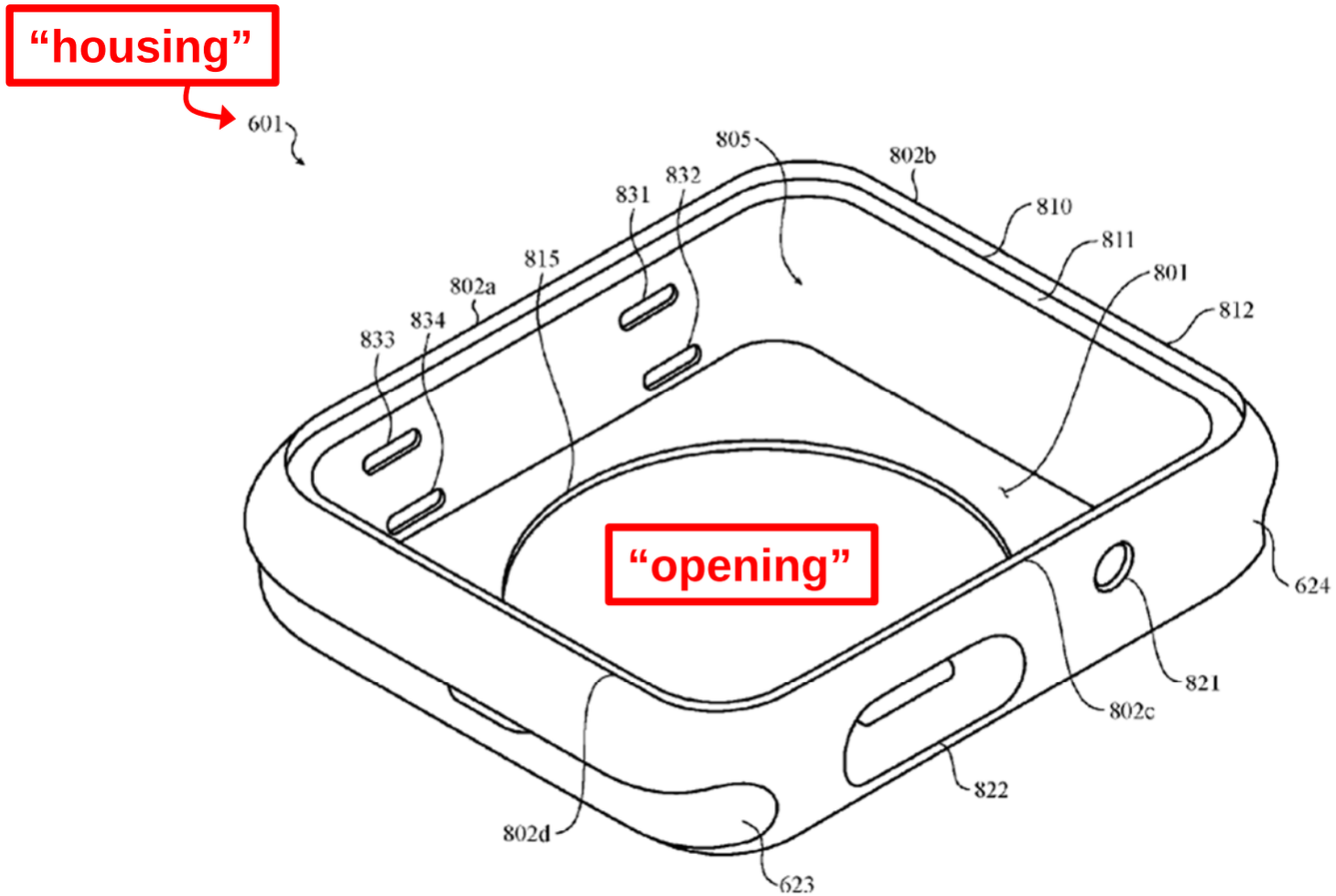

FIG. 8

“[A]n opening or aperture **815** may be formed in the bottom portion **801** of the housing **601**.”

See ’783 Pet. at 11; EX1001 (Fig. 8), col. 30:65–66

“a biosensor module aligned with the opening”

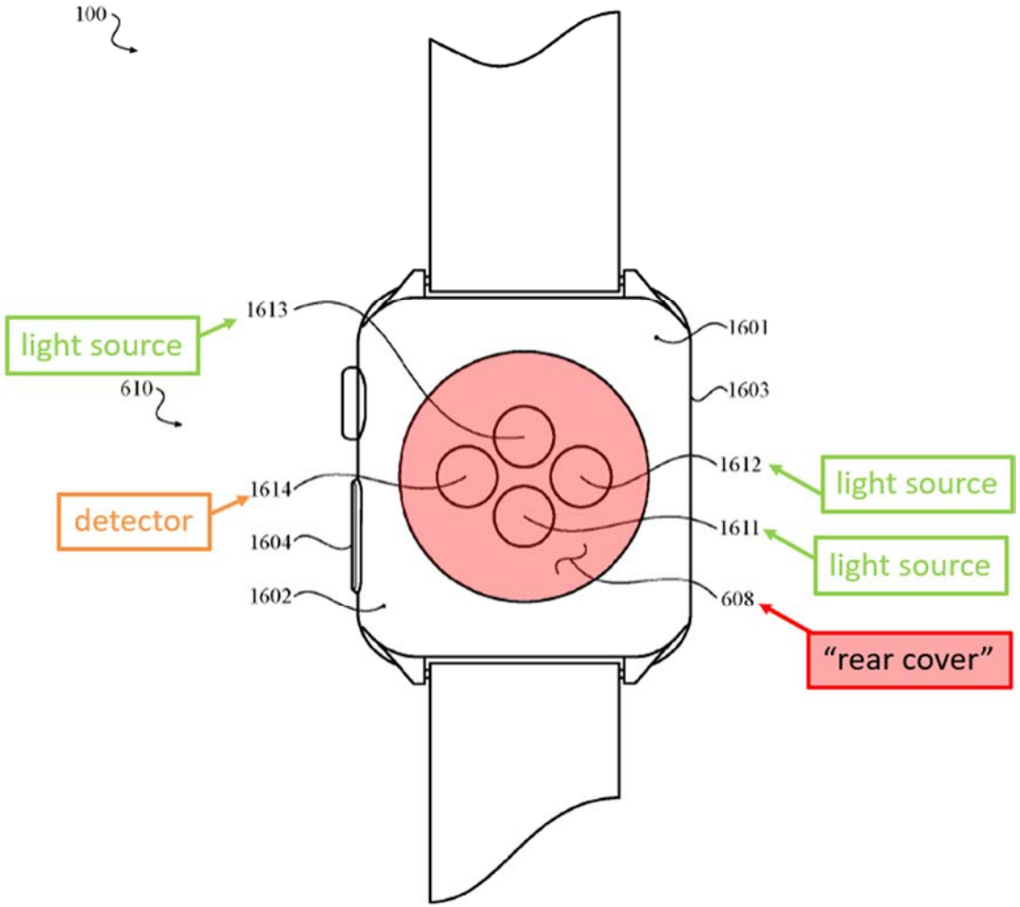

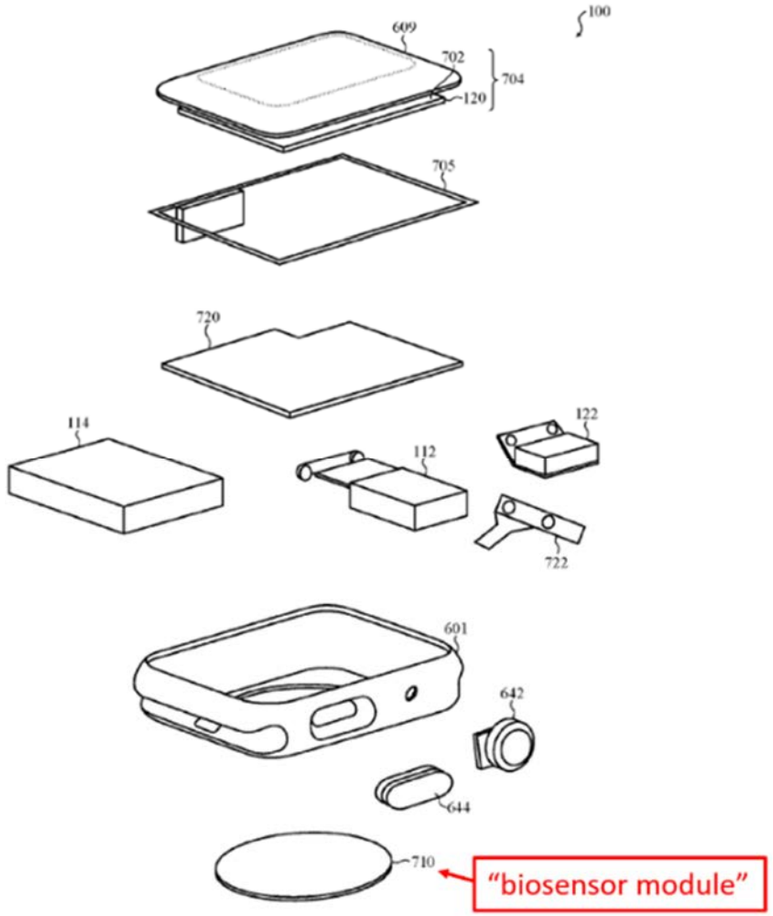

’783 Pet. at 14; '783 Reply at 4; EX1001 (Figs. 16, 7)

"a wireless charging receive coil positioned within the housing and aligned with the opening"

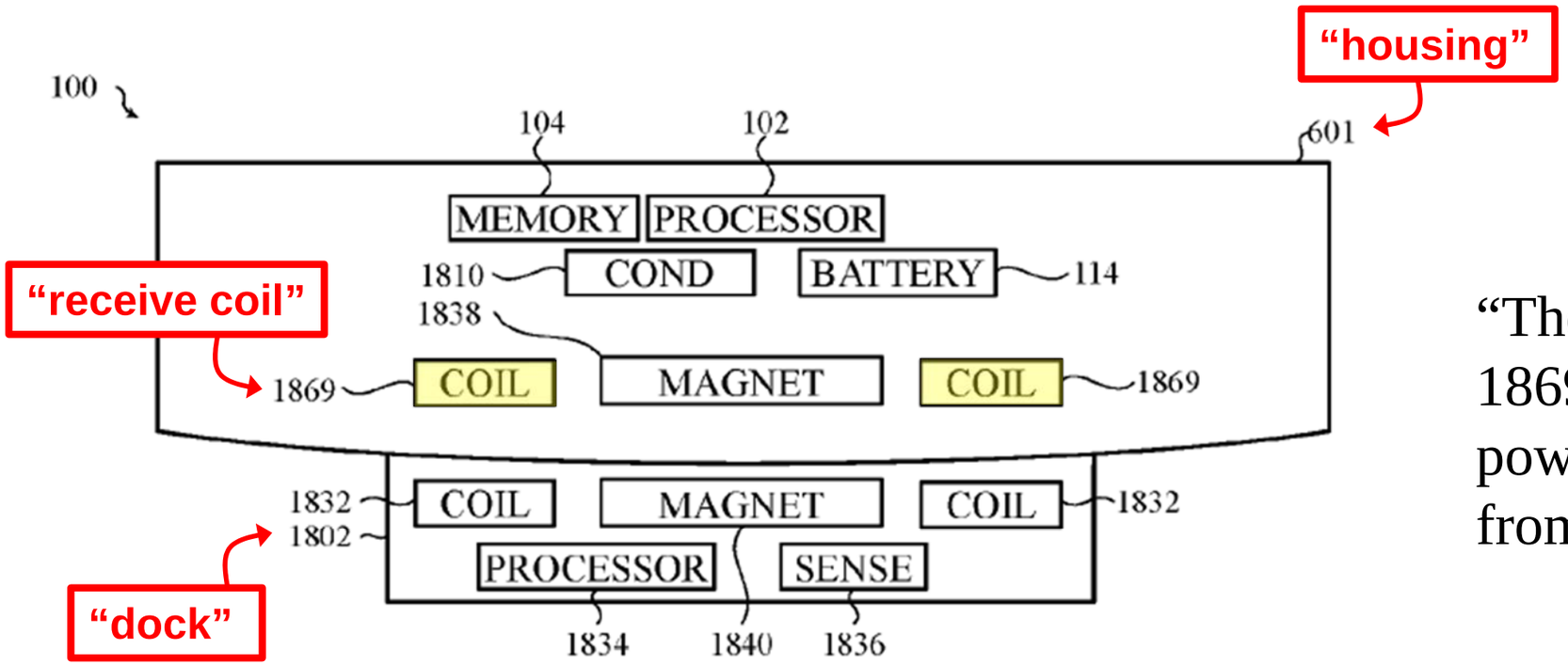

FIG. 19

"The receive coil 1869 may receive power wirelessly from the dock 1802"

See POR at 9; EX1001 (Fig. 19), col. 44:43–45

"a battery operably coupled to the wireless charging receive coil"

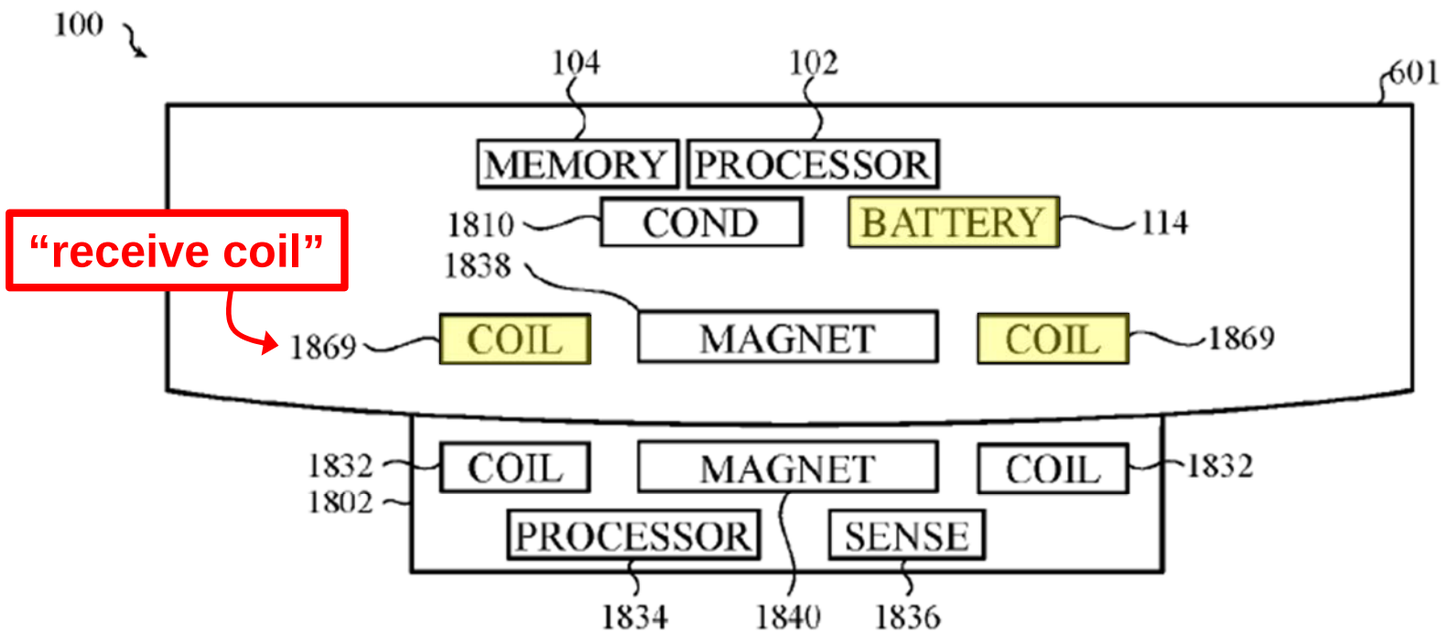

FIG. 19

"[T]he internal battery 114 is operably connected to a receive coil 1869"

See POR at 9; EX1001 (Fig. 19), col. 44:38–39

"a cover disposed over the biosensor module [and] configured to pass optical signals to and from the biosensor module"

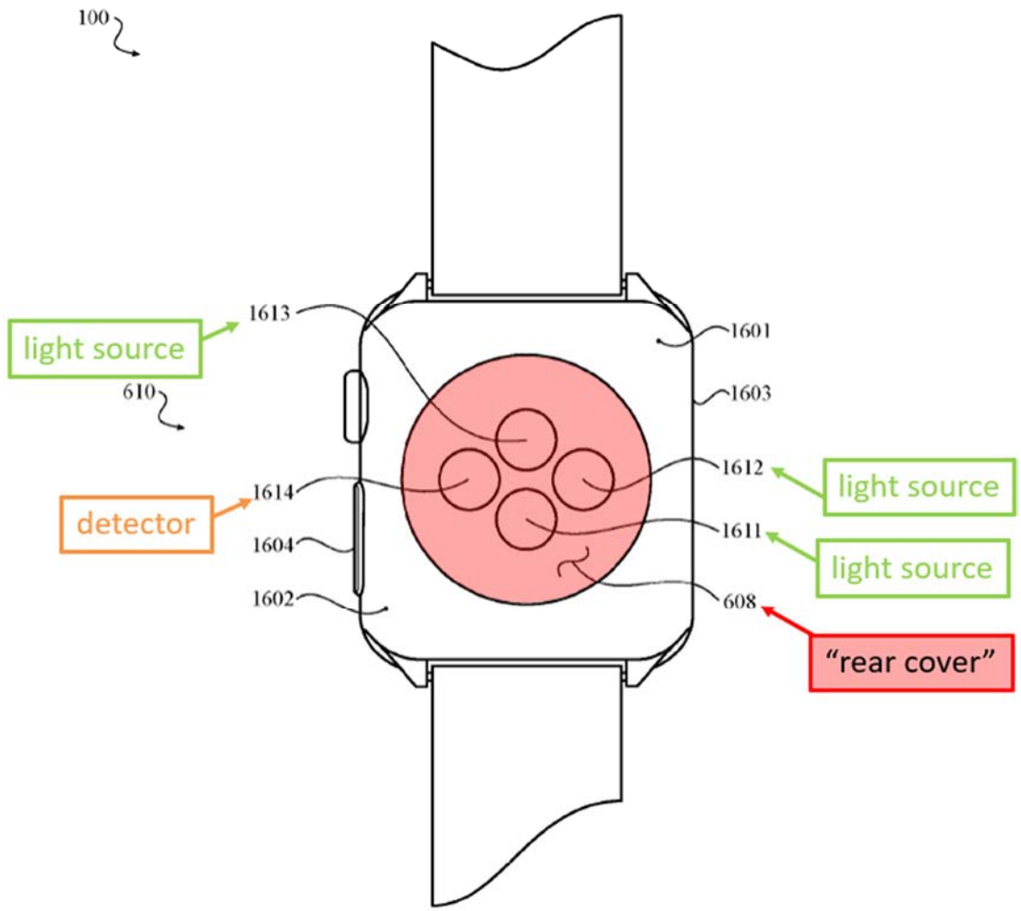

Pet. at 14; '783 Reply at 4; EX1001 (Fig. 16)

"the cover is configured to pass wireless power to the wireless charging receive coil."

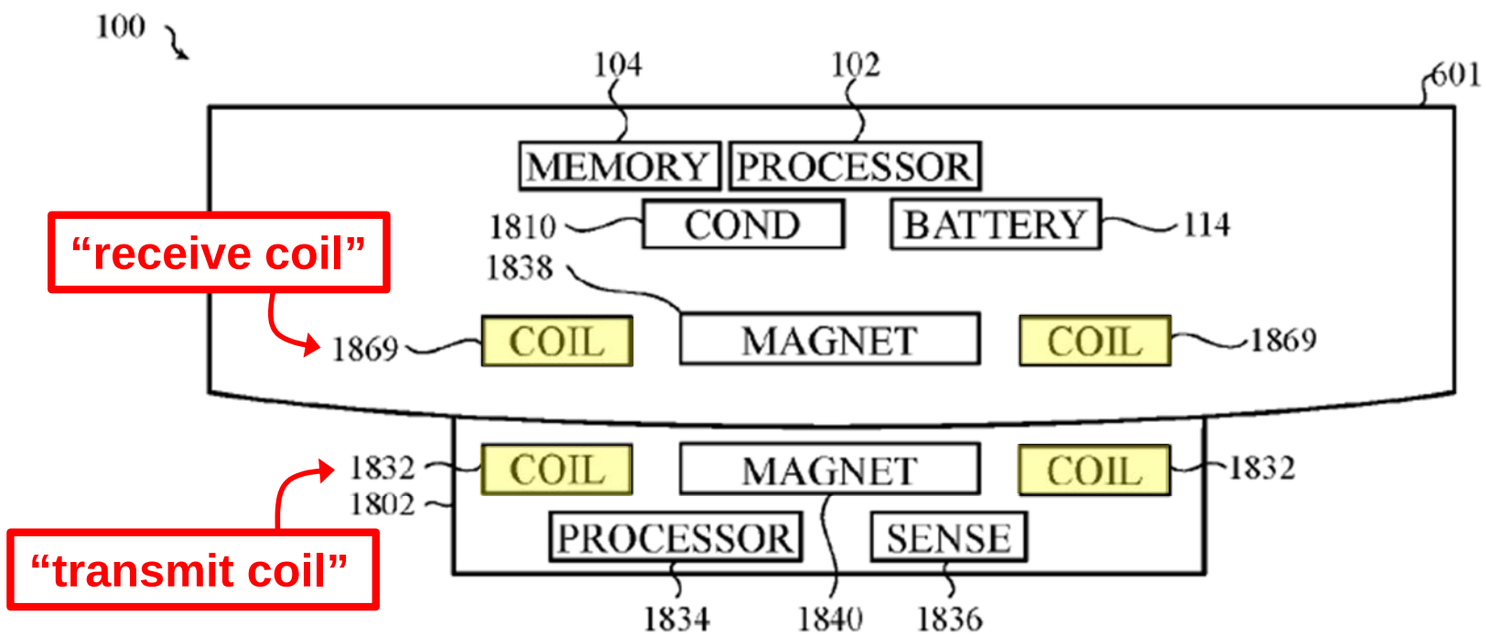

FIG. 19

"[A] receive coil 1869 [has] one or more windings for inductively coupling with a transmit coil 1832 of the dock 1802."

See POR at 9; EX1001 (Fig. 19), col. 44:41–43

Grounds

’783

GROUND 1	Claims 9–11, 15, 19, and 20 are unpatentable as obvious in view of Kotanagi and Honda
GROUND 2	Claim 16 is unpatentable as obvious in view of Kotanagi and Honda, and optionally in further combination with Park
GROUND 3	Claims 1–7 and 14 are unpatentable as obvious in view of Kotanagi and Honda, and optionally in further combination with Kateraas
GROUND 4	Claims 12–13 and 17–18 are unpatentable as obvious in view of Kotanagi and Honda, Jabori, and optionally in further combination with Park
GROUND 5	Claims 3 and 14 are unpatentable as obvious in view of Kotanagi, Honda, Fraser, and optionally in further combination with Kateraas
GROUND 6	Claim 8 is unpatentable because it would have been obvious in view of Kotanagi and Honda, Jabori, and optionally in further combination with Kateraas and/or Park

’491

GROUND 1	Claims 7, 11, 14, and 16 are unpatentable as obvious in view of Kotanagi and Honda
GROUND 2	Claims 1–3, 5, 13, and 17 are unpatentable as obvious in view of Kotanagi, Honda, and Choi
GROUND 3	Claims 8 and 15 are unpatentable as obvious in view of Kotanagi, Honda, and Fraser
GROUND 4	Claim 9 is unpatentable as obvious in view of Kotanagi, Honda, and Orr
GROUND 5	Claims 12 and 18 are unpatentable as obvious in view of Kotanagi, Honda, and Park
GROUND 6	Claim 4 is unpatentable as obvious in view of Kotanagi, Honda, Choi, and Park
GROUND 7	Claims 10 and 19 are unpatentable as obvious in view of Kotanagi, Honda, and Jabori
GROUND 8	Claim 6 is unpatentable as obvious in view of Kotanagi, Honda, Choi, and Jabori

’491 Ground 1 – Kotanagi and Honda render Claim 7 Obvious

(12) International Application Published Under the Patent Cooperation Treaty

(19) World Intellectual Property Organization
International Bureau

(43) International Publication Date
October 6, 2005 (10.06.2005)

PCT

(10) International Publication Number
WO 2005/092182 A1

(51) International Patent Classification: A61B 5/0245

(21) International Application Number: PCT/JP2005/002021

(22) International Filing Date: February 10, 2005 (02.10.2005)

(25) International Filing Language: Japanese

(26) International Publication Language: Japanese

(30) Priority Data:
Japanese Patent Application 2004-09194 March 26, 2004 (03.26.2004) JP

(71) Applicant: SEIKO INSTRUMENTS INC. [JP/JP]; 1-8 Nakase, Mihama-ku, Chiba-shi, Chiba 2618507 (JP).

(72) Inventors; and
(75) Inventors/Applicants: KOTANAGI, Susumu [JP/JP]; c/o SEIKO INSTRUMENTS INC., 1-8 Nakase, Mihama-ku, Chiba-shi, Chiba 2618507 (JP). NAKAMURA, Takashi [JP/JP]; c/o SEIKO INSTRUMENTS INC., 1-8 Nakase, Mihama-ku, Chiba-shi, Chiba 2618507 (JP). MAEGAWA, Kazuya [JP/JP]; c/o SEIKO INSTRUMENTS INC., 1-8 Nakase, Mihama-ku, Chiba-shi, Chiba 2618507 (JP). MIYAHARA, Shinichiro [JP/JP]; c/o SEIKO INSTRUMENTS INC., 1-8 Nakase, Mihama-ku, Chiba-shi, Chiba 2618507 (JP). MORIYA, Koichi [JP/JP]; c/o SEIKO INSTRUMENTS INC., 1-8 Nakase, Mihama-ku, Chiba-shi, Chiba 2618507 (JP).

/continued overleaf/

(54) TITLE OF THE INVENTION: BIOLOGICAL INFORMATION MEASURING DEVICE

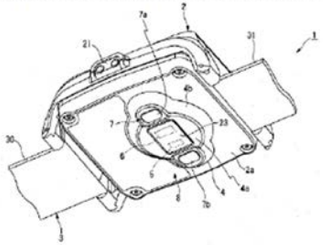

(57) Abstract: A biological information measuring device comprising a biological sensor section including a body, a protrusion formed on the lower surface of the body, a means for fixing the body to an arm while directing the lower surface of the body toward the surface side of a biological object, a light emitting section for irradiating light toward the biological object while touching the surface of the biological object, a light receiving section for receiving reflection light from the biological object out of the light irradiated from the light emitting section and producing biological information signal corresponding to the quantity of received light, and means for detecting whether or not the light emitting section and the light receiving section are in contact with the surface of the biological object, and a section provided in the body and detecting biological information based on the biological information signal, characterized in that the biological sensor section is arranged on the lower surface of the protrusion. The biometric information measuring device can be fixed for a long time without giving an unpleasant feeling while enhancing tightness.

(57) Abstract: A biological information measuring device comprising: a biological sensor part including: a main body; a protruding part formed so as to protrude from the lower surface of the main body; a fixing means for mounting the main body to an arm while directing the lower surface of the main body toward the living body surface side; a light-emitting part for emitting light toward the living body while in contact with the living body surface; a light-receiving part for receiving reflected light from the living body out of the light emitted by the light-emitting part and generating a biological

Kotanagi

(12) **United States Patent**
Honda et al.

(10) Patent No.: US 6,265,789 B1
(45) Date of Patent: Jul. 24, 2001

(54) ELECTRONIC APPARATUS

(75) Inventors: Katsuyuki Honda, Shioiiri; Motomu Hayakawa, Shiojiri; Ichiro Aoshima, Shimosuwa-machi; Hidetoshi Matsuki, Sendai, all of (JP)

(73) Assignee: Seiko Epson Corporation, Tokyo (JP)

(*) Notice: Subject to any disclaimer, the term of this patent is extended or adjusted under 35 U.S.C. 154(b) by 0 days.

(21) Appl. No.: 09/341,933

(22) PCT Filed: Nov. 19, 1998

(86) PCT No.: PCT/JP98/05221
§ 371 Date: Sep. 10, 1999
§ 102(e) Date: Sep. 10, 1999

(87) PCT Pub. No.: WO99/27603
PCT Pub. Date: Jun. 3, 1999

(30) Foreign Application Priority Data
Nov. 20, 1997 (JP) 9-319723
Mar. 31, 1998 (JP) 10-085774

(51) Int. Cl.[7] H01M 10/46

(52) U.S. Cl. 307/33; 307/106

(58) Field of Search 307/104, 33

(56) References Cited

U.S. PATENT DOCUMENTS

5,070,293	*	12/1991	Ishii et al.	320/2
5,455,467	*	10/1995	Young et al.	307/104
5,550,452	*	8/1996	Shirai et al.	320/2
5,920,131	*	7/1999	Platt et al.	307/104
5,923,544	*	7/1999	Urano	307/104
5,929,598	*	7/1999	Nakama et al.	320/108
5,949,155	*	9/1999	Tamura et al.	307/107

FOREIGN PATENT DOCUMENTS

60-8636	1/1985	(JP) .
6-24356	3/1994	(JP) .
8-79976	3/1996	(JP) .
9-330838	12/1997	(JP) .

* cited by examiner

Primary Examiner—Fritz Fleming

(57) ABSTRACT

In at least two separated devices, a data transmission or a power transmission is performed through the electromagnetic coupling of coils which are arranged in mutually facing positions in the respective devices. In order to reduce the effect of a displacement between two coils even if the two coils are displaced from each other, the inner diameter of a coil **110** on the side of a station, as a primary coil, for performing the data transmission or the power transmission, is set to be larger than the inner diameter of a coil **210** on a watch side, as a secondary coil, by at least 1 mm.

17 Claims, 16 Drawing Sheets

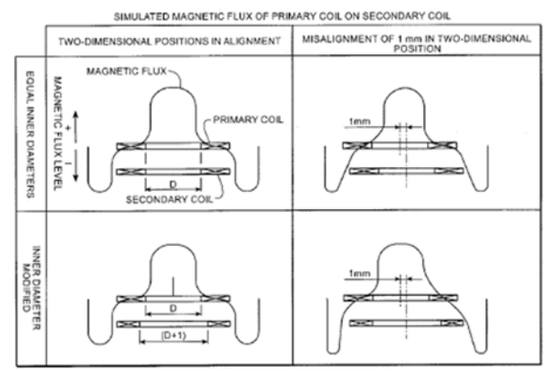

Honda

"A wearable electronic device, comprising: a housing formed from a conductive material and defining a first opening opposite to a second opening"

Kotanagi (cover glasses spanning openings):

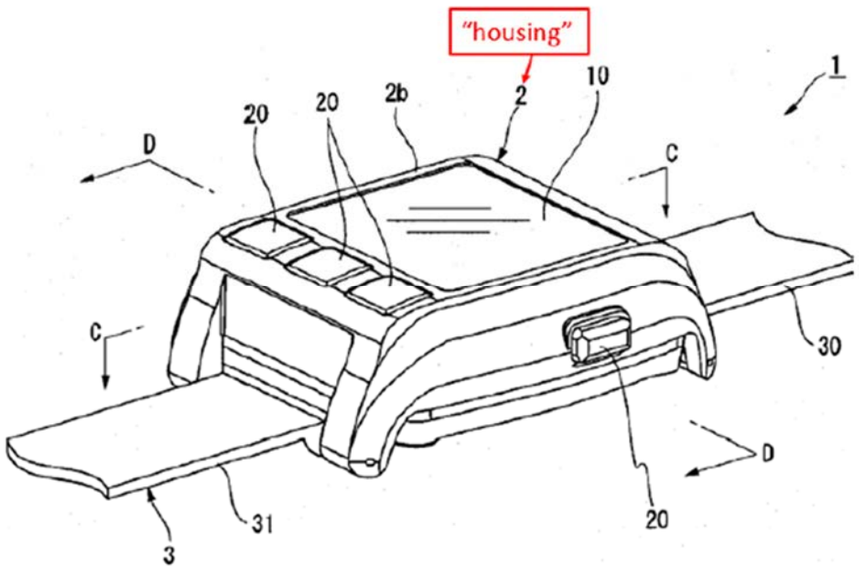

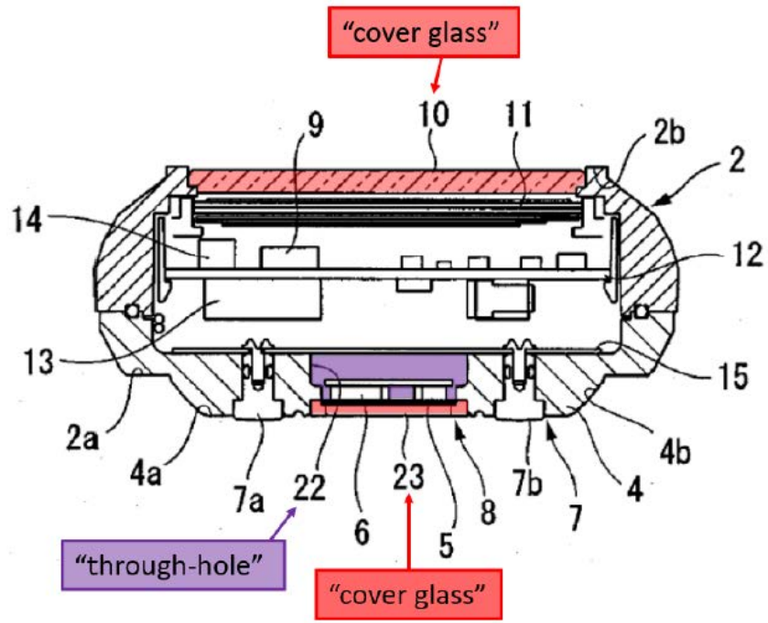

"The housing 2 … is made of plastic or a metal material such as aluminum."

"a band attached to the housing and configured to secure the wearable electronic device to a user"

Kotanagi:

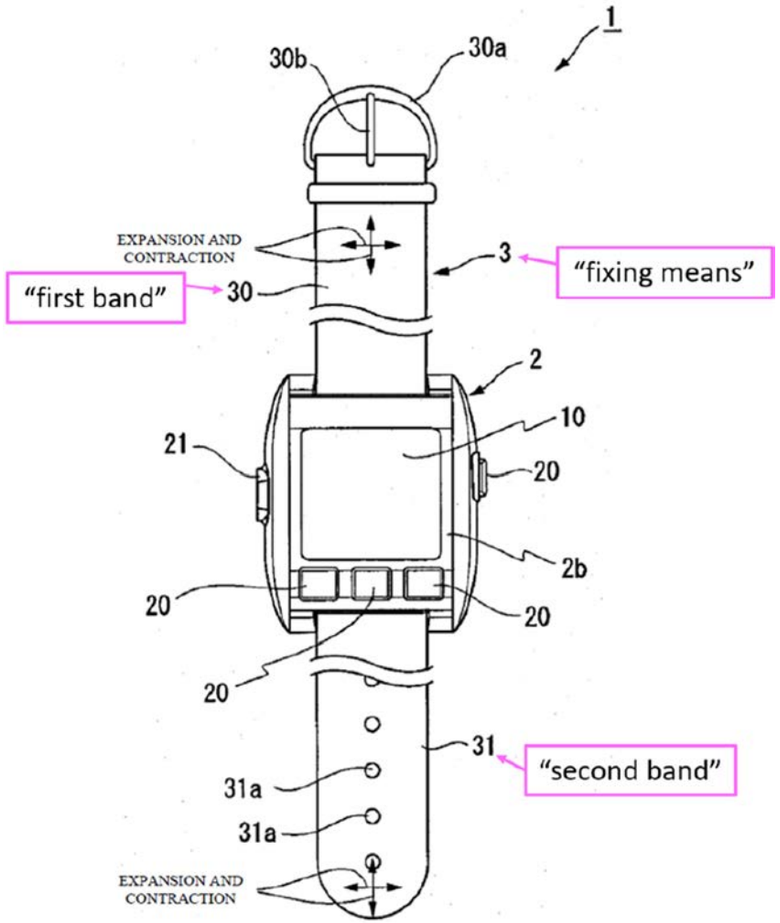

“a display positioned in the first opening”

Kotanagi:

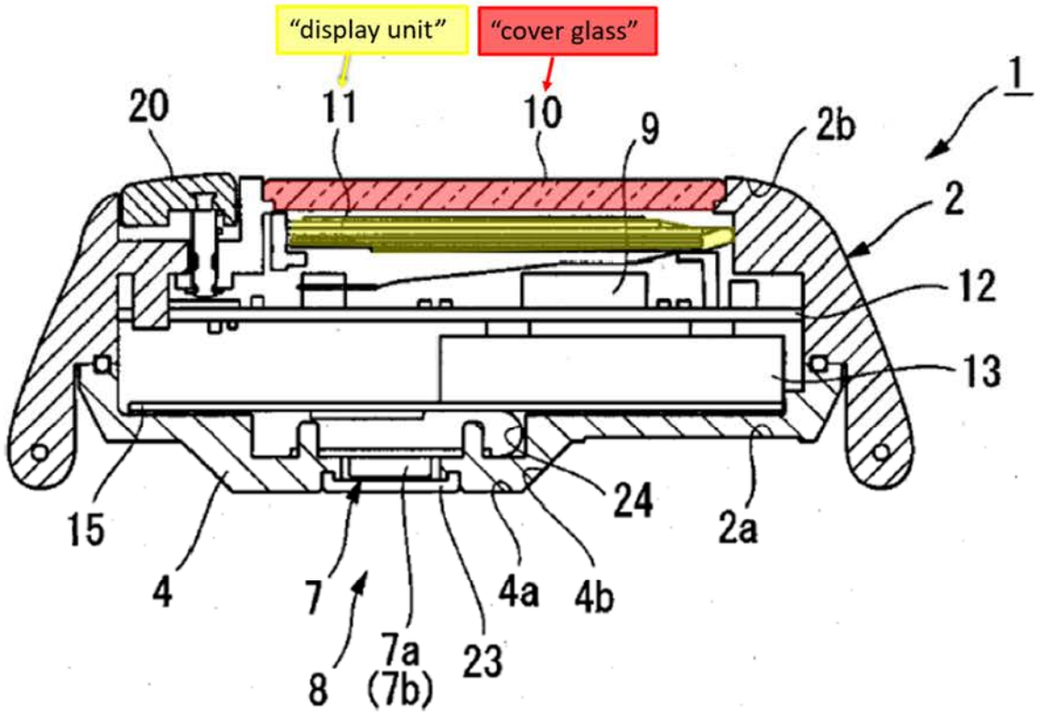

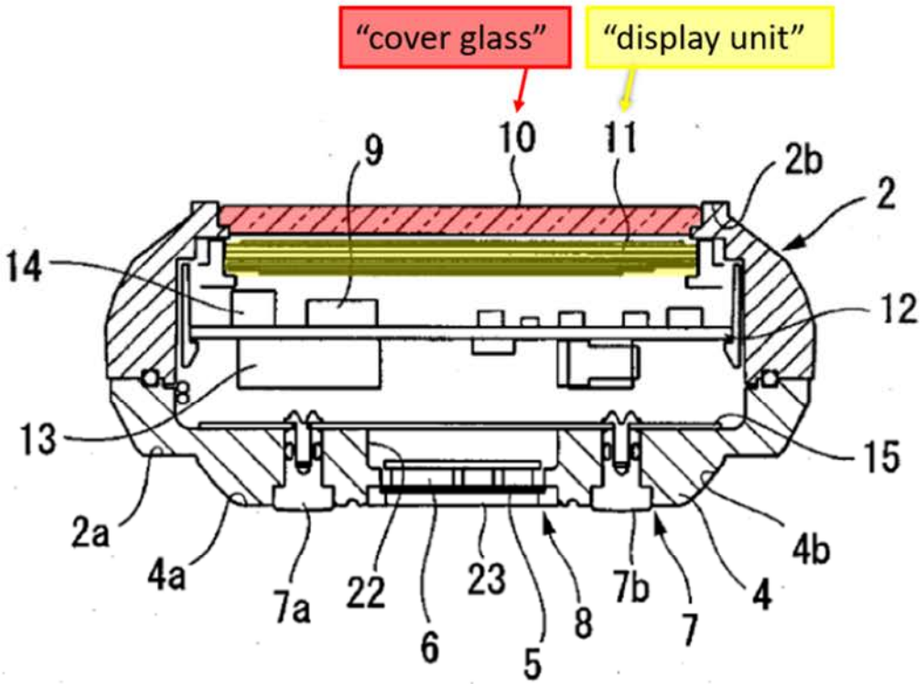

“a cover comprising a non-conductive material and positioned over the second opening, the cover forming a portion of an exterior surface of the wearable electronic device”

Kotanagi:

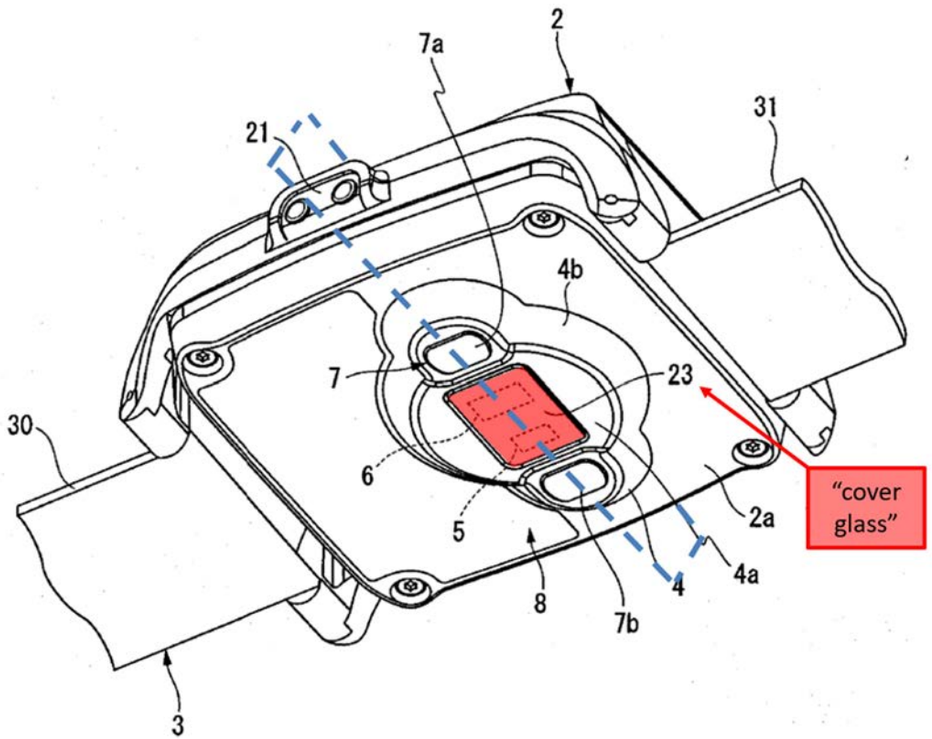

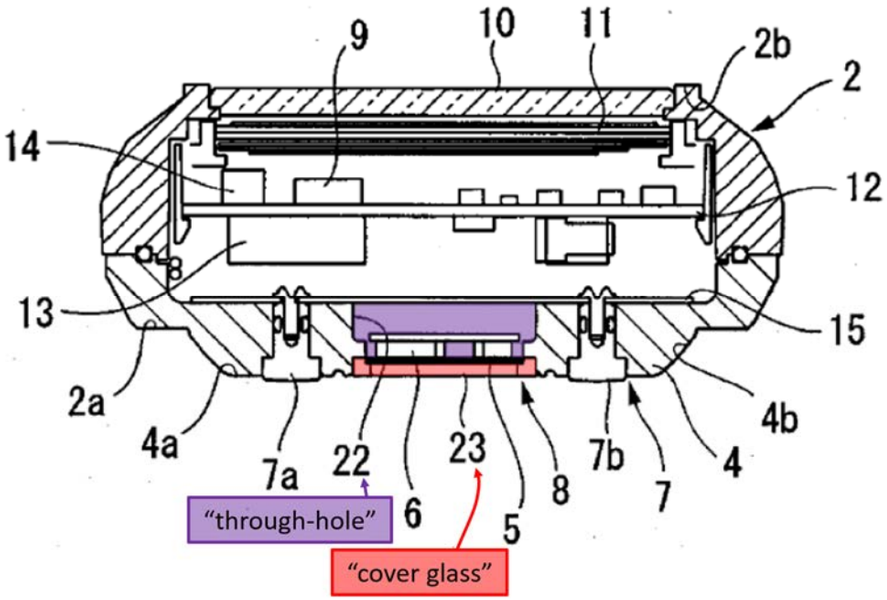

"a biosensor module positioned below the cover configured to pass an optical signal through a window defined within the non-conductive material of the cover"

Kotanagi:

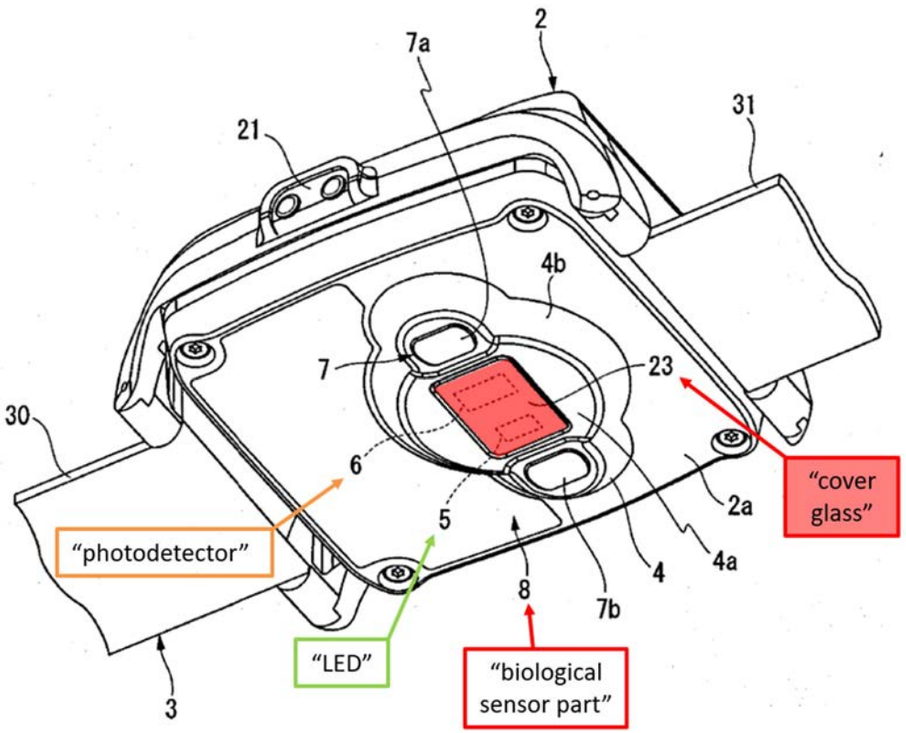

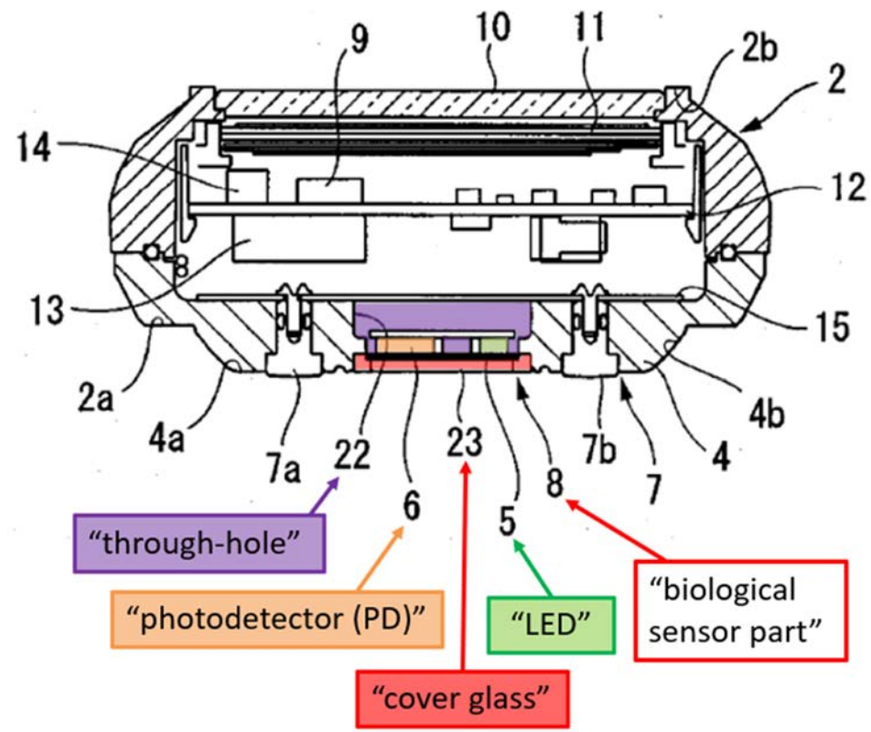

“a wireless charging receive coil aligned with the second opening and below the cover, the wireless charging receive coil configured to inductively couple to an external wireless charging device through the non-conductive material of the cover”

Honda:

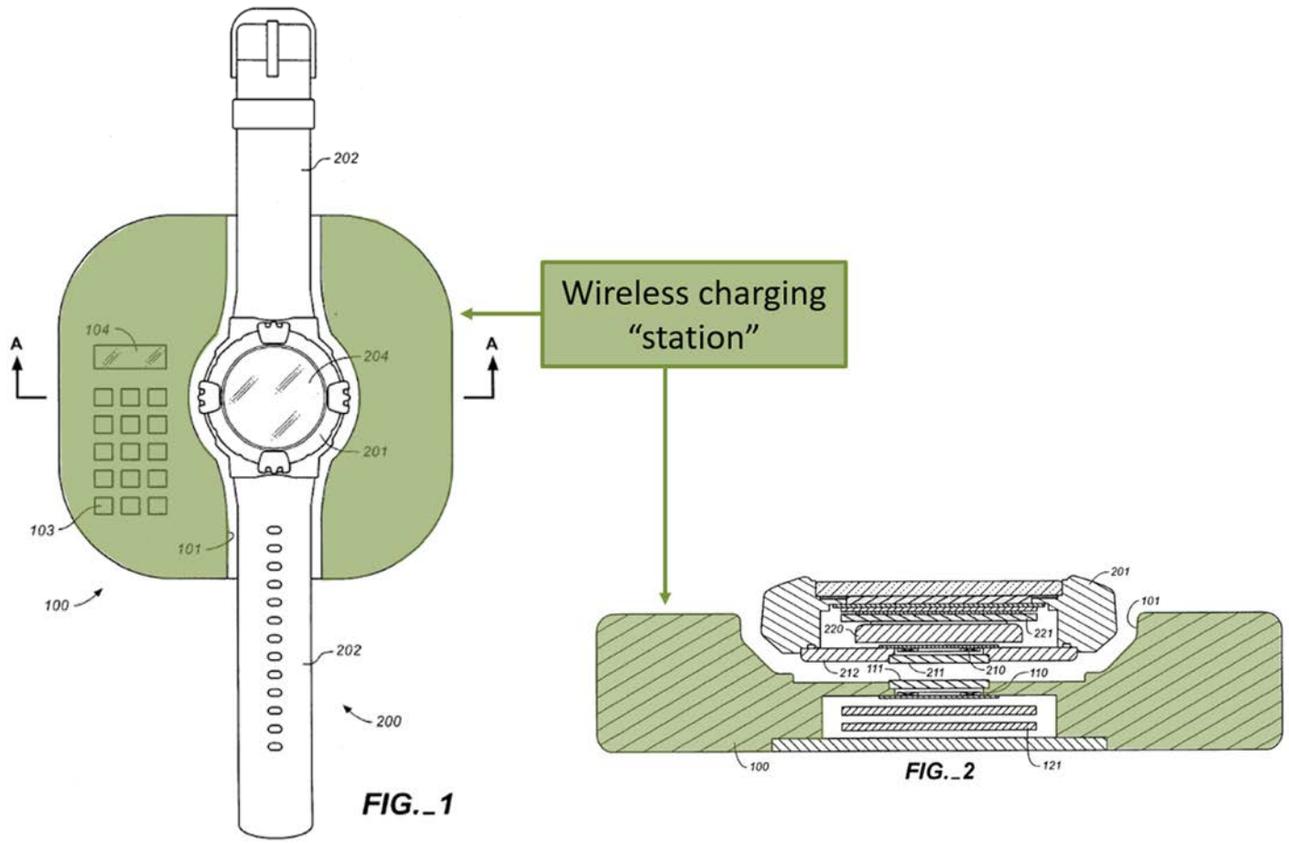

"a wireless charging receive coil aligned with the second opening and below the cover, the wireless charging receive coil configured to inductively couple to an external wireless charging device through the non-conductive material of the cover"

Honda:

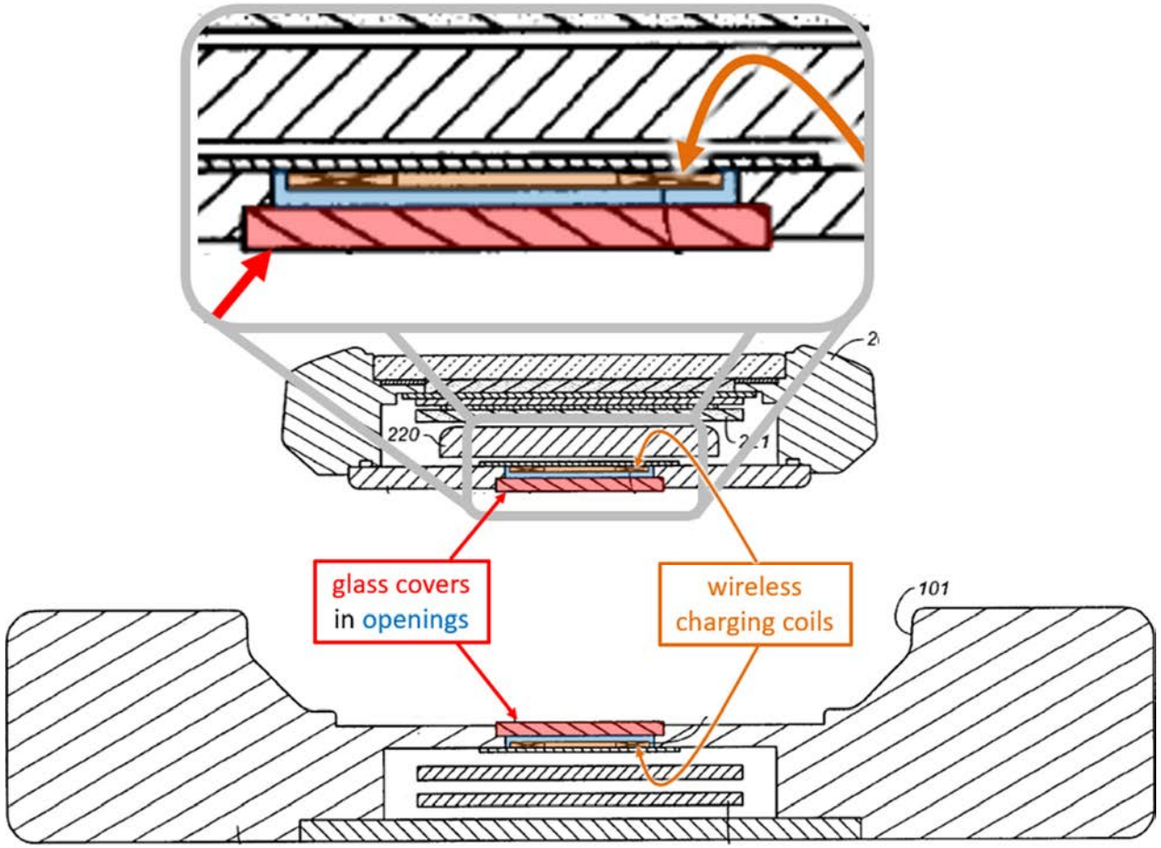

Pet. at 23; EX1006 (Fig. 2)

’491 Claim 1: “An electronic watch comprising a housing formed from a metal material and defining a rear opening along a rear portion of the housing”

Kotanagi:

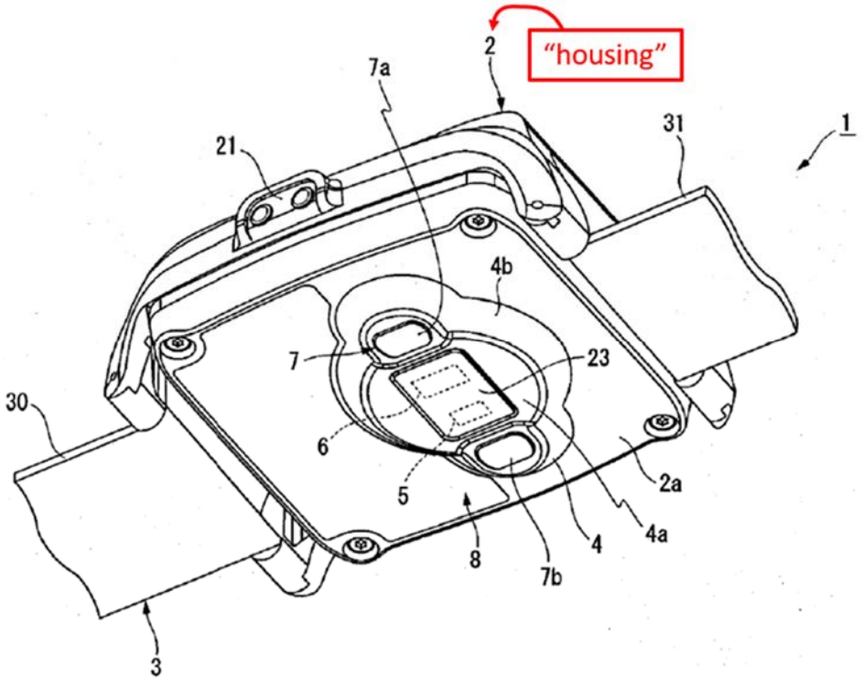

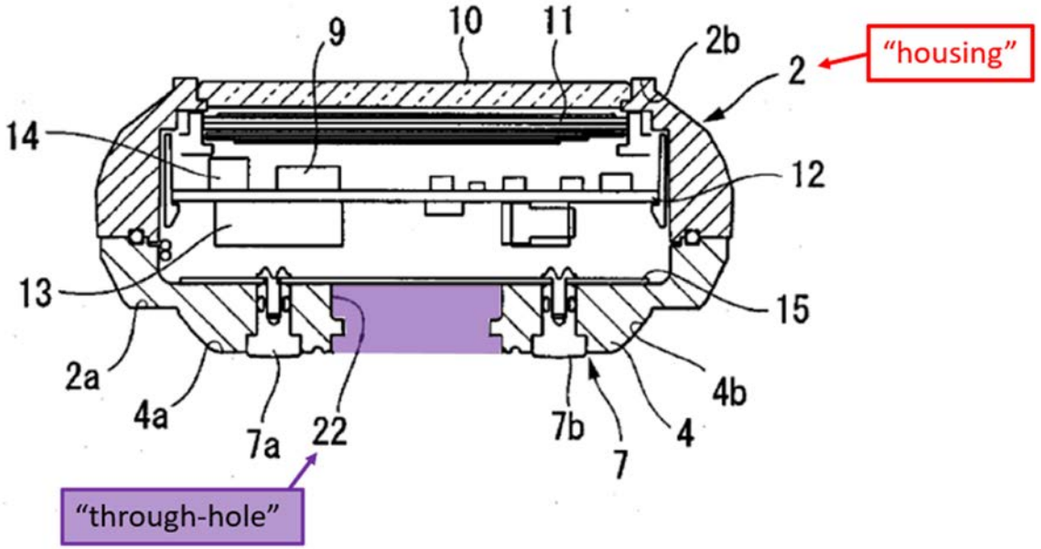

’491 Claim 1: “An electronic watch comprising a housing formed from a metal material and defining a rear opening along a rear portion of the housing”

Honda:

“case back 212 “typically made of a metal”

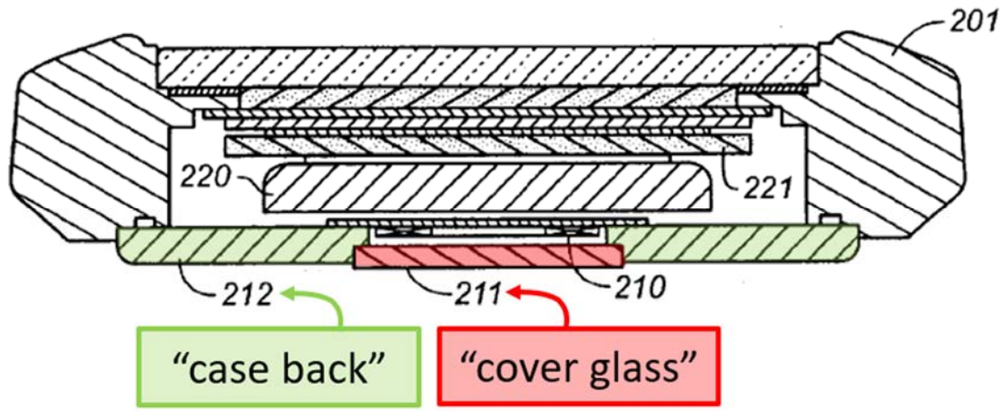

Pet. at 43; *see* EX1006, col. 15:47–49, Fig. 2

’491 Claim 1: “a touch-sensitive display positioned at least partially within the housing”

Choi:

“front 130” is “a display visible to the user, for example, a touch display”

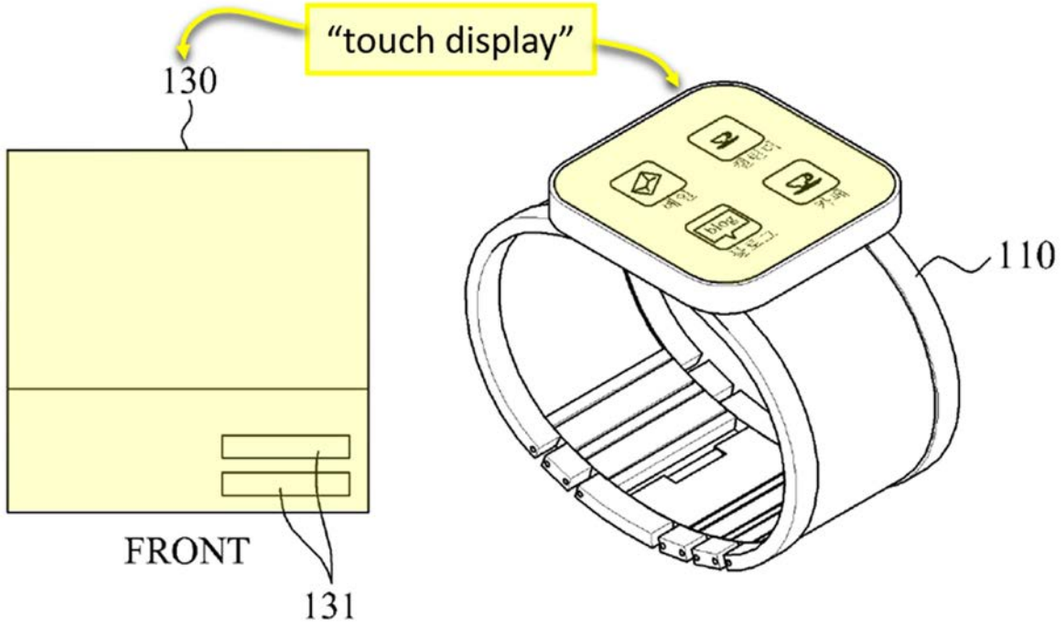

Pet. at 44; *see* EX1023 [32], Fig. 1

’491 Ground 2 - Motivation to Combine Choi

Undisputed that adding a touchscreen:

- reduces the need to provide buttons on the front
- increases the size of Kotanagi’s screen without expanding device size
- reduces the number of separate components and moving parts
- less risk of mechanical failure
- provides additional functionality beyond hardware button
- virtual “buttons” can be programmed for varying situations
- changing screen can provide context to reduce need for user training

Pet. at 44–45

"a band coupled to the housing and configured to couple the electronic watch to a user"

Kotanagi	Honda	Choi
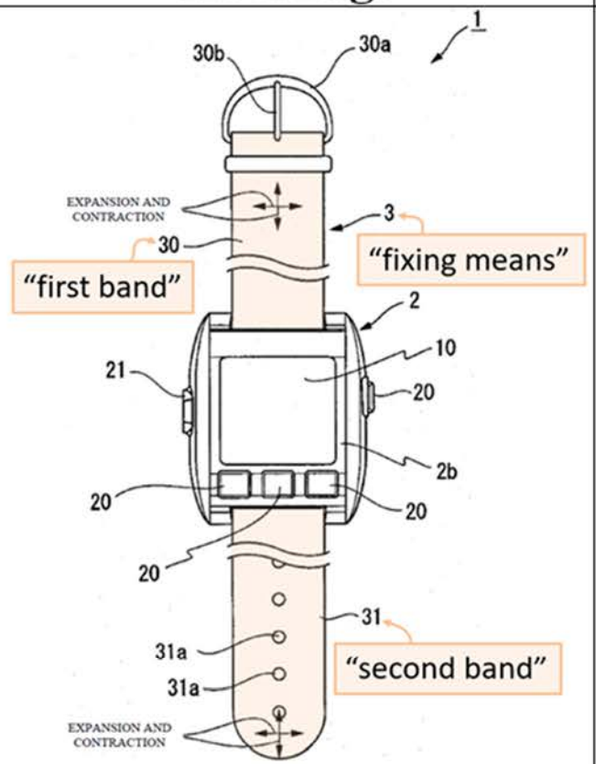	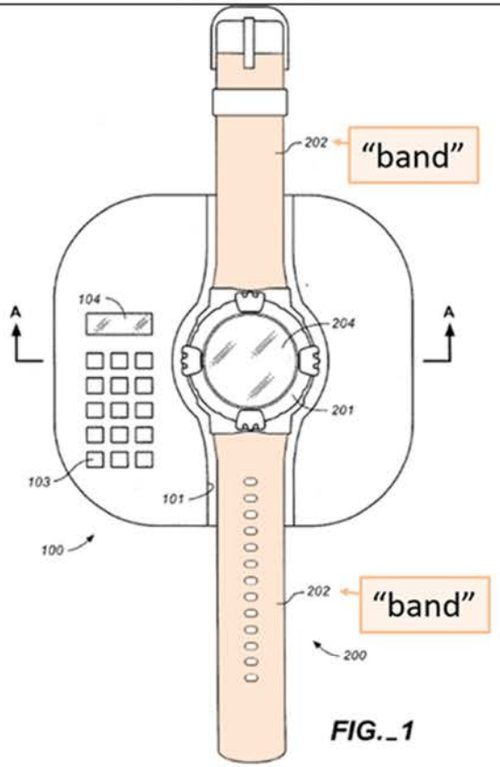	
See EX1005 at 23 (Fig. 1).	*See* EX1006 at 2 (Fig. 1).	*See* EX1023 at 3, 28 (Fig. 1); EX1011 at 24 (Fig. 1).

"a cover formed from a dielectric material and forming a seal along the rear opening of the housing"

Kotanagi: Protects from "water droplets"

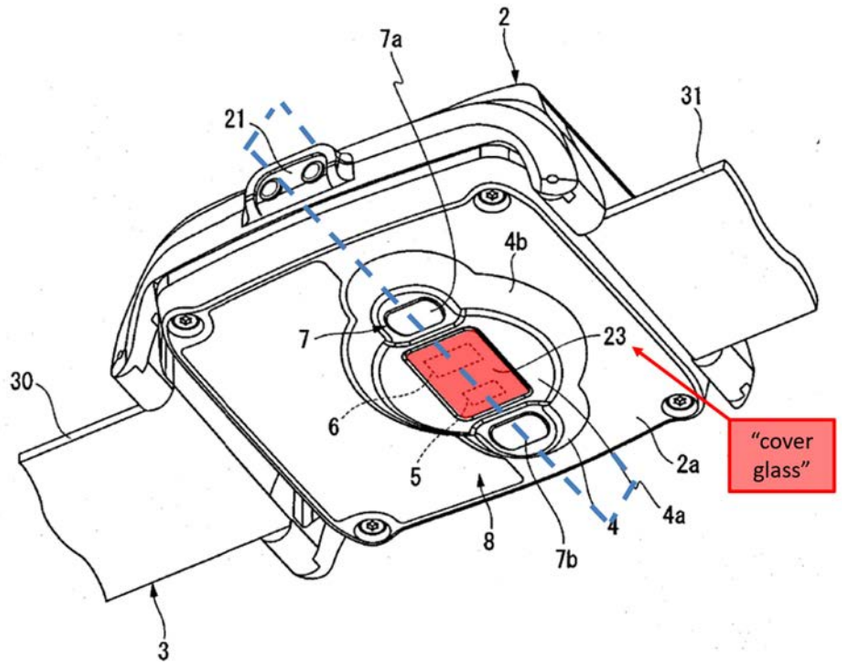

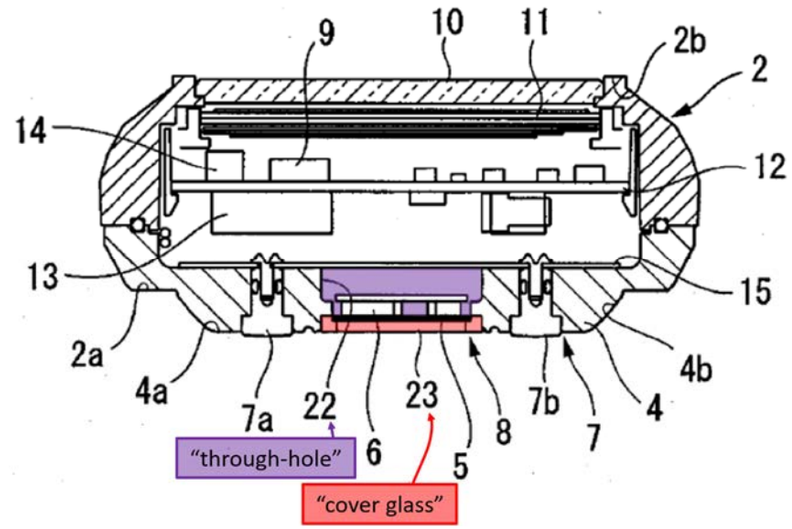

"a cover formed from a dielectric material and forming a seal along the rear opening of the housing"

Honda:

"waterproofness" up to five atmospheres

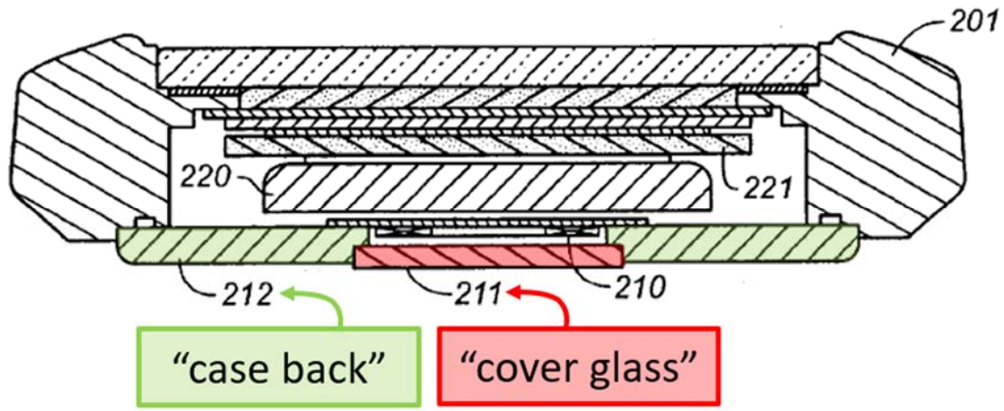

Pet. at 46–47; *see* EX1006 col. 1:24–31, 15:36–28 13:22–25, Fig. 2

"an optical sensor positioned within the housing and configured to transmit an optical signal through the dielectric material of the cover"

Kotanagi:

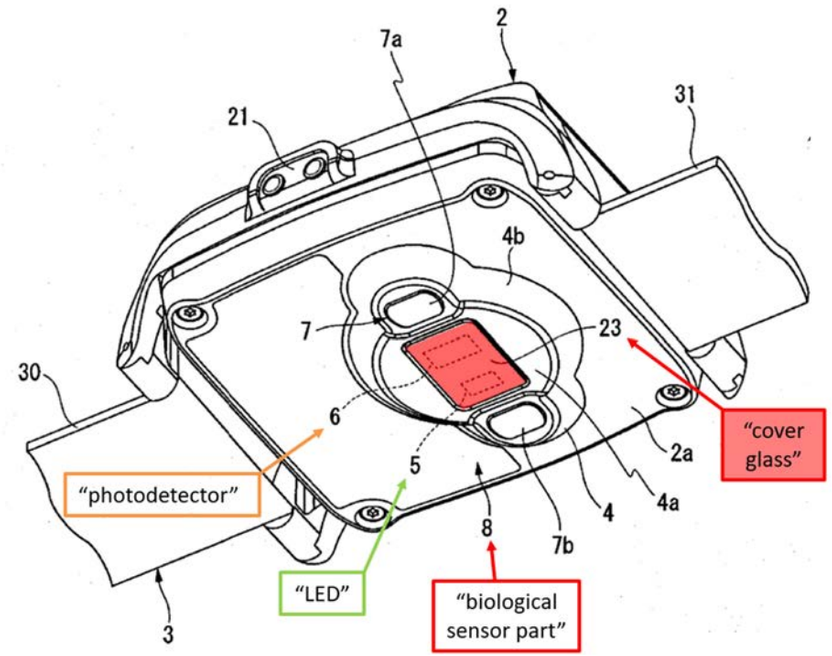

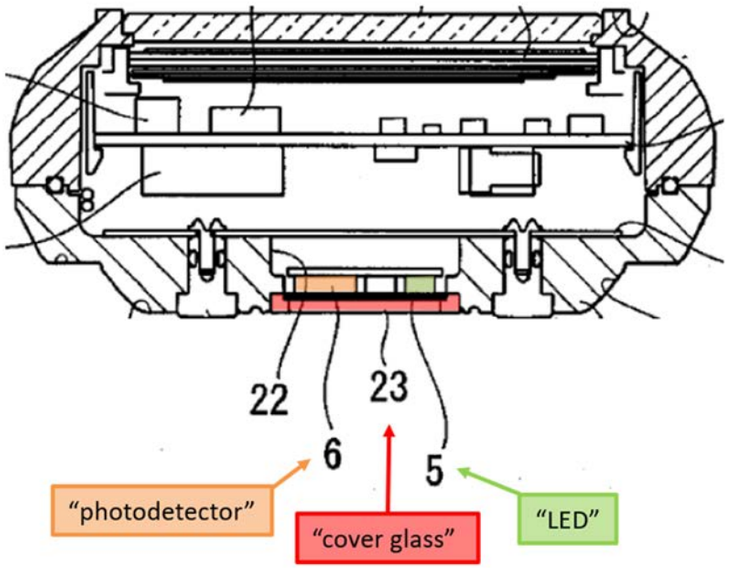

"a charging coil positioned within the housing and configured to receive wireless power through the dielectric material of the cover"

Honda:

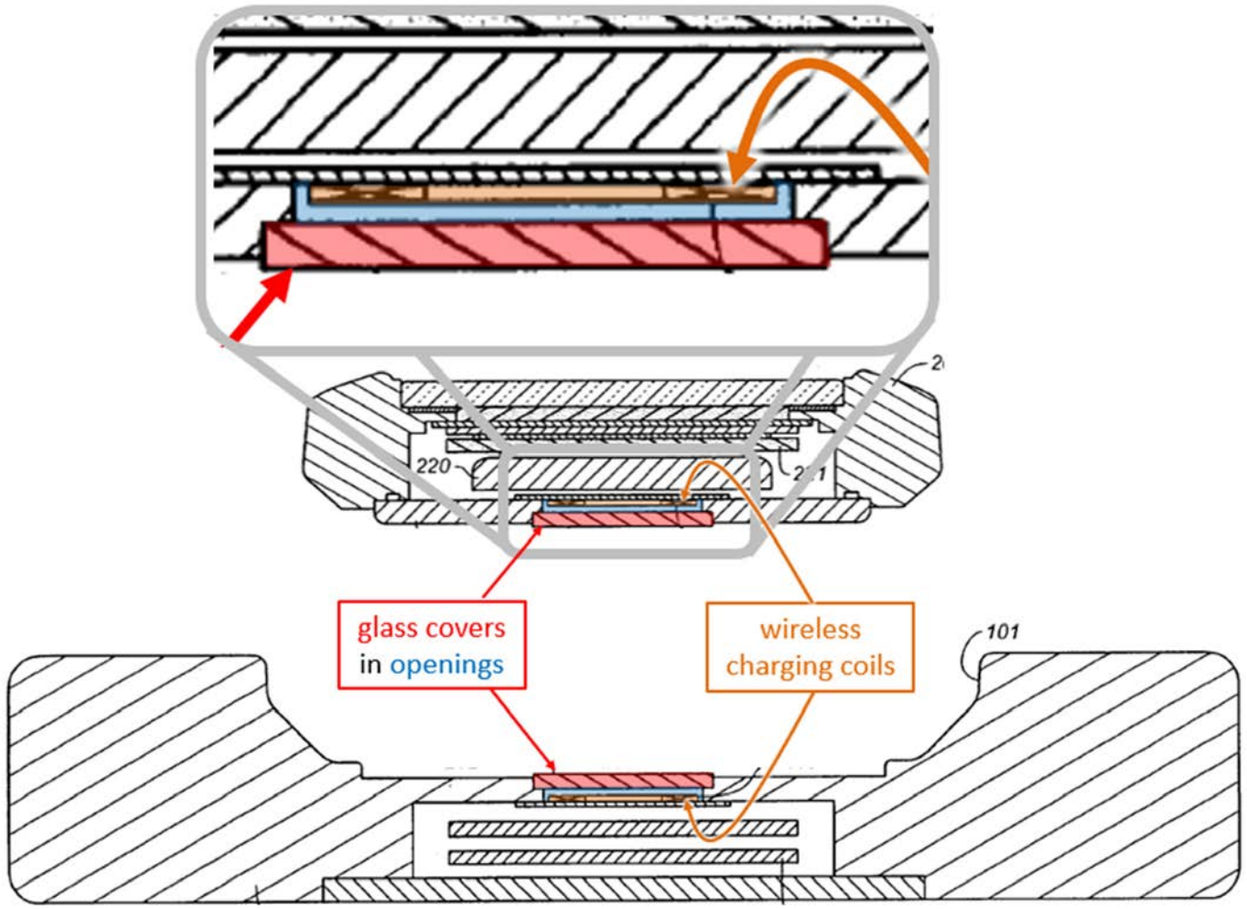

Pet. at 48–49; *see* EX1006 Fig. 2

“the electronic watch is configured to measure a heart rate using the optical sensor”

Kotanagi:

“generates a pulse signal (biological information signal) corresponding to the amount of received light” reflected from blood vessels.

Honda:

“detects biological information including the pulse rate or the heart rate of the body.”

’491 Pet. at 50; EX1005 ¶65; EX1006 col. 6:17–19

Grounds

’783

GROUND 1	Claims 9–11, 15, 19, and 20 are unpatentable as obvious in view of Kotanagi and Honda
GROUND 2	Claim 16 is unpatentable as obvious in view of Kotanagi and Honda, and optionally in further combination with Park
GROUND 3	Claims 1–7 and 14 are unpatentable as obvious in view of Kotanagi and Honda, and optionally in further combination with Kateraas
GROUND 4	Claims 12–13 and 17–18 are unpatentable as obvious in view of Kotanagi and Honda, Jabori, and optionally in further combination with Park
GROUND 5	Claims 3 and 14 are unpatentable as obvious in view of Kotanagi, Honda, Fraser, and optionally in further combination with Kateraas
GROUND 6	Claim 8 is unpatentable because it would have been obvious in view of Kotanagi and Honda, Jabori, and optionally in further combination with Kateraas and/or Park

’491

GROUND 1	Claims 7, 11, 14, and 16 are unpatentable as obvious in view of Kotanagi and Honda
GROUND 2	Claims 1–3, 5, 13, and 17 are unpatentable as obvious in view of Kotanagi, Honda, and Choi
GROUND 3	Claims 8 and 15 are unpatentable as obvious in view of Kotanagi, Honda, and Fraser
GROUND 4	Claim 9 is unpatentable as obvious in view of Kotanagi, Honda, and Orr
GROUND 5	Claims 12 and 18 are unpatentable as obvious in view of Kotanagi, Honda, and Park
GROUND 6	Claim 4 is unpatentable as obvious in view of Kotanagi, Honda, Choi, and Park
GROUND 7	Claims 10 and 19 are unpatentable as obvious in view of Kotanagi, Honda, and Jabori
GROUND 8	Claim 6 is unpatentable as obvious in view of Kotanagi, Honda, Choi, and Jabori

’783 Ground 1 – Kotanagi and Honda render Claim 9 Obvious

(12) International Application Published Under the Patent Cooperation Treaty

(19) World Intellectual Property Organization
International Bureau

(43) International Publication Date
October 6, 2005 (10.06.2005)

PCT

(10) International Publication Number
WO 2005/092182 A1

(51) International Patent Classification: A61B 5/0245

(21) International Application Number: PCT/JP2005/002021

(22) International Filing Date: February 10, 2005 (02.10.2005)

(25) International Filing Language: Japanese

(26) International Publication Language: Japanese

(30) Priority Data:
Japanese Patent Application 2004-09194 March 26, 2004 (03.26.2004) JP

(71) Applicant: SEIKO INSTRUMENTS INC. [JP/JP]; 1-8 Nakase, Mihama-ku, Chiba-shi, Chiba 2618507 (JP).

(72) Inventors; and
(75) Inventors/Applicants: KOTANAGI, Susumu [JP/JP]; c/o SEIKO INSTRUMENTS INC., 1-8 Nakase, Mihama-ku, Chiba-shi, Chiba 2618507 (JP). NAKAMURA, Takashi [JP/JP]; c/o SEIKO INSTRUMENTS INC., 1-8 Nakase, Mihama-ku, Chiba-shi, Chiba 2618507 (JP). MAEGAWA, Kazuya [JP/JP]; c/o SEIKO INSTRUMENTS INC., 1-8 Nakase, Mihama-ku, Chiba-shi, Chiba 2618507 (JP). MIYAHARA, Shinichiro [JP/JP]; c/o SEIKO INSTRUMENTS INC., 1-8 Nakase, Mihama-ku, Chiba-shi, Chiba 2618507 (JP). MORIYA, Koichi [JP/JP]; c/o SEIKO INSTRUMENTS INC., 1-8 Nakase, Mihama-ku, Chiba-shi, Chiba 2618507 (JP).

/continued overleaf/

(54) TITLE OF THE INVENTION: BIOLOGICAL INFORMATION MEASURING DEVICE

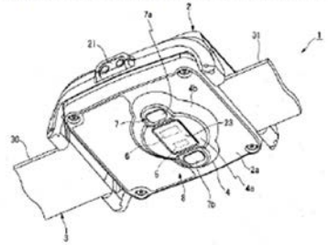

(57) Abstract: A biological information measuring device comprising a biological sensor section including a body, a protrusion formed on the lower surface of the body, a means for fixing the body to an arm while directing the lower surface of the body toward the surface side of a biological object, a light emitting section for irradiating light toward the biological object while touching the surface of the biological object, a light receiving section for receiving reflection light from the biological object out of the light irradiated from the light emitting section and producing biological information signal corresponding to the quantity of received light, and means for detecting whether or not the light emitting section and the light receiving section are in contact with the surface of the biological object, and a section provided in the body and detecting biological information based on the biological information signal, characterized in that the biological sensor section is arranged on the lower surface of the protrusion. The biometric information measuring device can be fixed for a long time without giving an unpleasant feeling while enhancing tightness.

(57) Abstract: A biological information measuring device comprising: a biological sensor part including: a main body; a protruding part formed so as to protrude from the lower surface of the main body; a fixing means for mounting the main body to an arm while directing the lower surface of the main body toward the living body surface side; a light-emitting part for emitting light toward the living body while in contact with the living body surface; a light-receiving part for receiving reflected light from the living body out of the light emitted by the light-emitting part and generating a biological

Kotanagi

(12) **United States Patent**
Honda et al.

(10) Patent No.: US 6,265,789 B1
(45) Date of Patent: Jul. 24, 2001

(54) ELECTRONIC APPARATUS

(75) Inventors: **Katsuyuki Honda**, Shioiiri; **Motomu Hayakawa**, Shiojiri; **Ichiro Aoshima**, Shimosuwa-machi; **Hidetoshi Matsuki**, Sendai, all of (JP)

(73) Assignee: **Seiko Epson Corporation**, Tokyo (JP)

(*) Notice: Subject to any disclaimer, the term of this patent is extended or adjusted under 35 U.S.C. 154(b) by 0 days.

(21) Appl. No.: **09/341,933**

(22) PCT Filed: **Nov. 19, 1998**

(86) PCT No.: **PCT/JP98/05221**
§ 371 Date: **Sep. 10, 1999**
§ 102(e) Date: **Sep. 10, 1999**

(87) PCT Pub. No.: **WO99/27603**
PCT Pub. Date: **Jun. 3, 1999**

(30) **Foreign Application Priority Data**

Nov. 20, 1997 (JP) 9-319723
Mar. 31, 1998 (JP) 10-085774

(51) **Int. Cl.**[7] **H01M 10/46**

(52) **U.S. Cl.** **307/33**; 307/106

(58) **Field of Search** 307/104, 33

(56) **References Cited**

U.S. PATENT DOCUMENTS

5,070,293	*	12/1991	Ishii et al.	320/2
5,455,467	*	10/1995	Young et al.	307/104
5,550,452	*	8/1996	Shirai et al.	320/2
5,920,131	*	7/1999	Platt et al.	307/104
5,923,544	*	7/1999	Urano	307/104
5,929,598	*	7/1999	Nakama et al.	320/108
5,949,155	*	9/1999	Tamura et al.	307/107

FOREIGN PATENT DOCUMENTS

60-8636	1/1985	(JP) .
6-24356	3/1994	(JP) .
8-79976	3/1996	(JP) .
9-330838	12/1997	(JP) .

* cited by examiner

Primary Examiner—Fritz Fleming

(57) **ABSTRACT**

In at least two separated devices, a data transmission or a power transmission is performed through the electromagnetic coupling of coils which are arranged in mutually facing positions in the respective devices. In order to reduce the effect of a displacement between two coils even if the two coils are displaced from each other, the inner diameter of a coil **110** on the side of a station, as a primary coil, for performing the data transmission or the power transmission, is set to be larger than the inner diameter of a coil **210** on a watch side, as a secondary coil, by at least 1 mm.

17 Claims, 16 Drawing Sheets

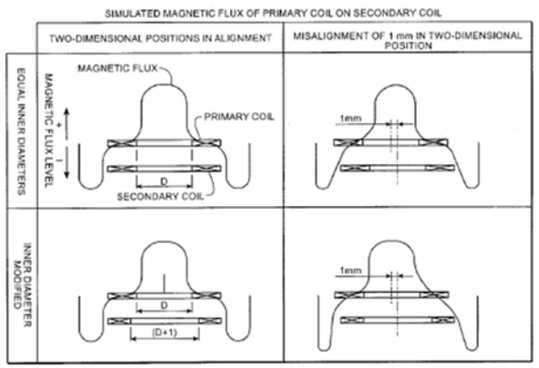

Honda

"A wearable electronic device, comprising: a housing comprising a bottom portion defining an opening"

Kotanagi:

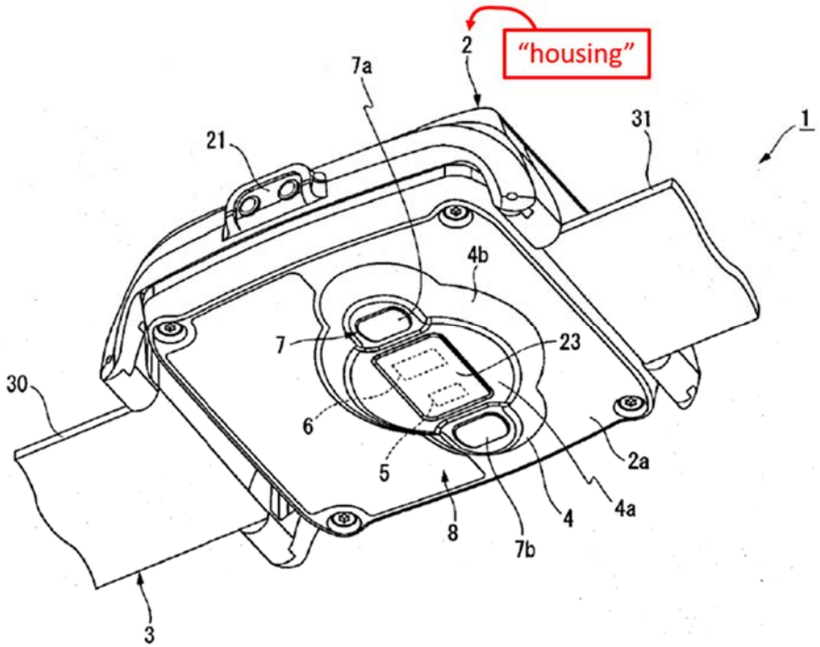

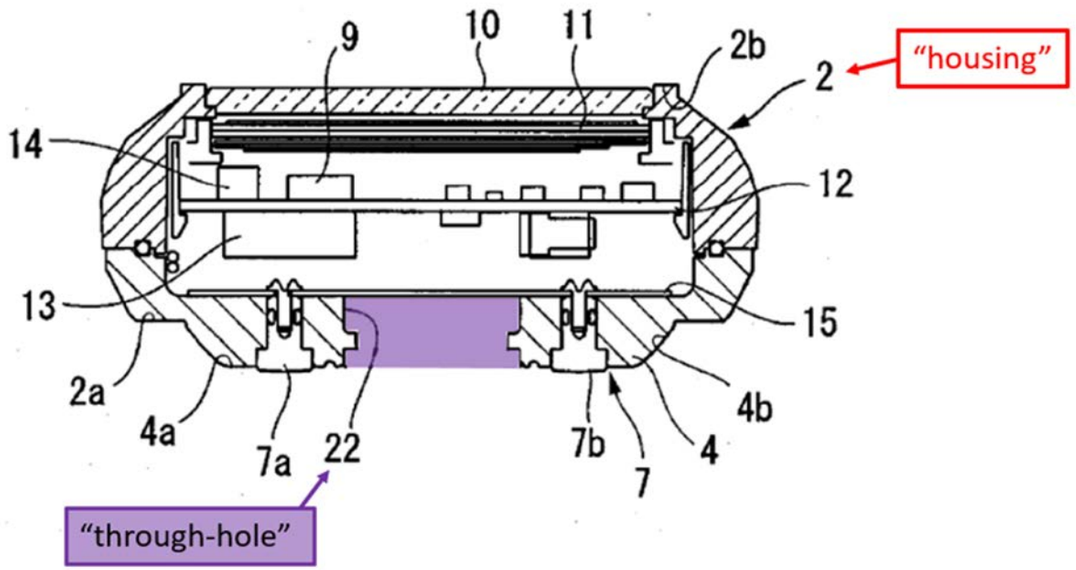

“a biosensor module aligned with the opening”

Kotanagi:

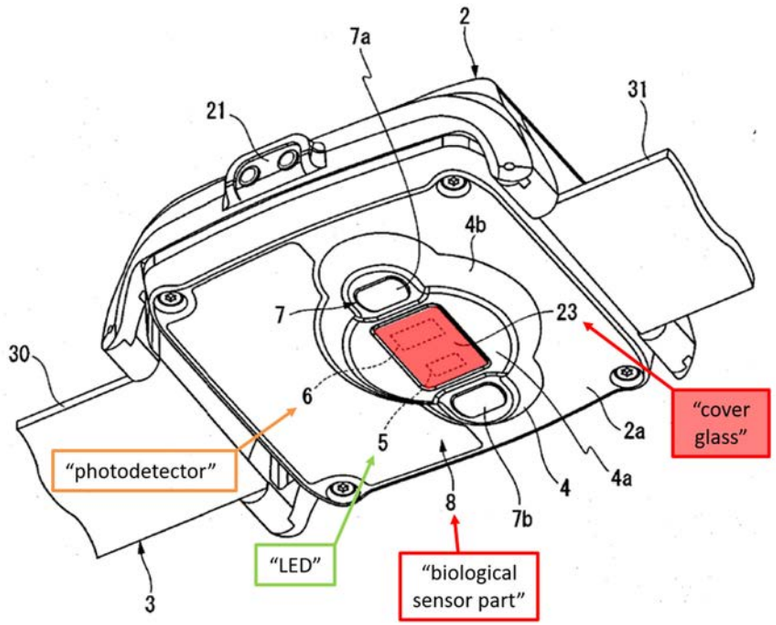

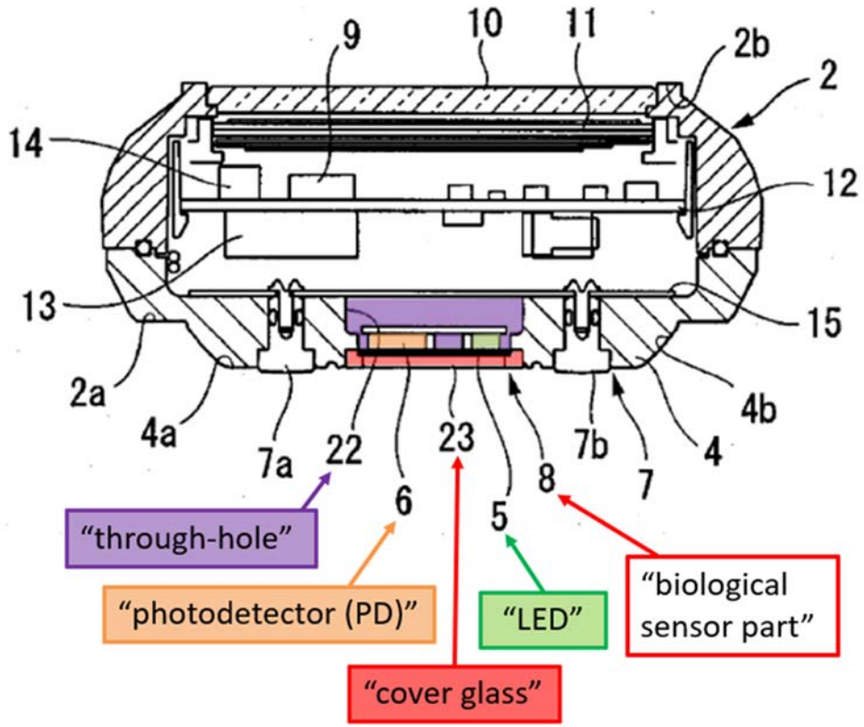

“a wireless charging receive coil positioned within the housing and aligned with the opening”

Honda:

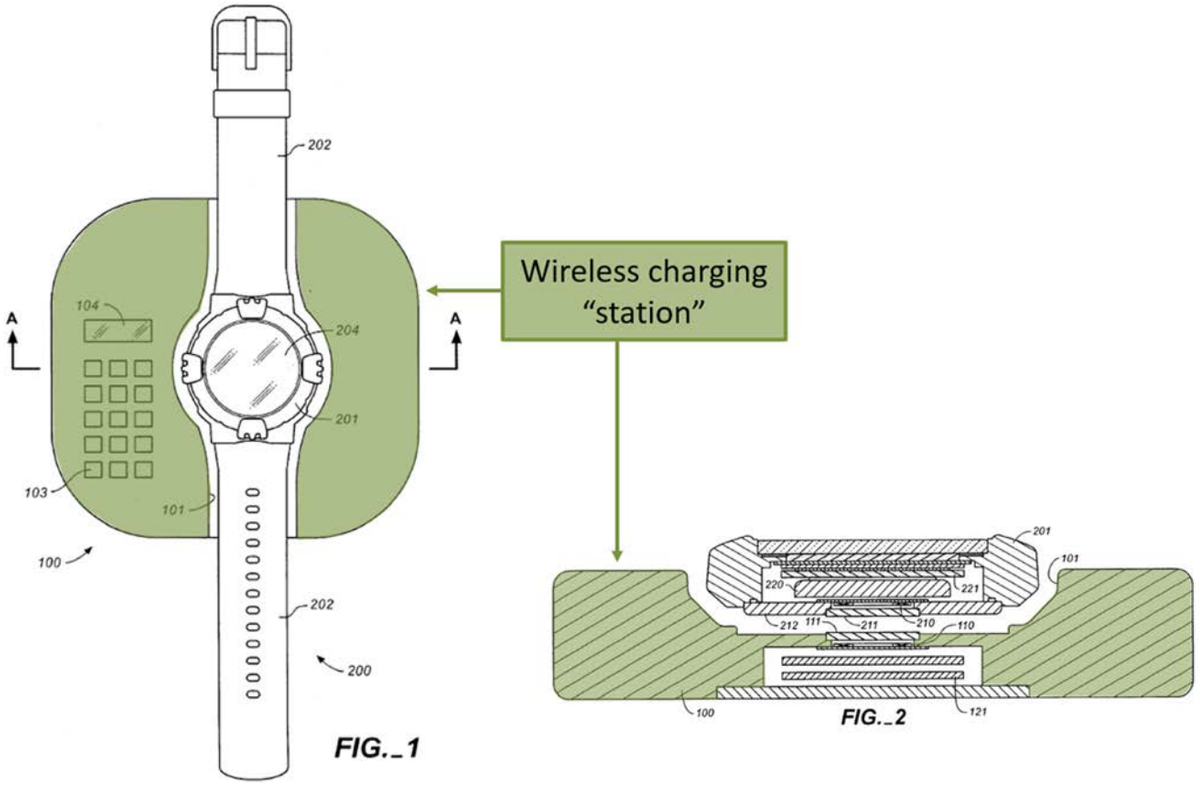

"a wireless charging receive coil positioned within the housing and aligned with the opening"

Honda:

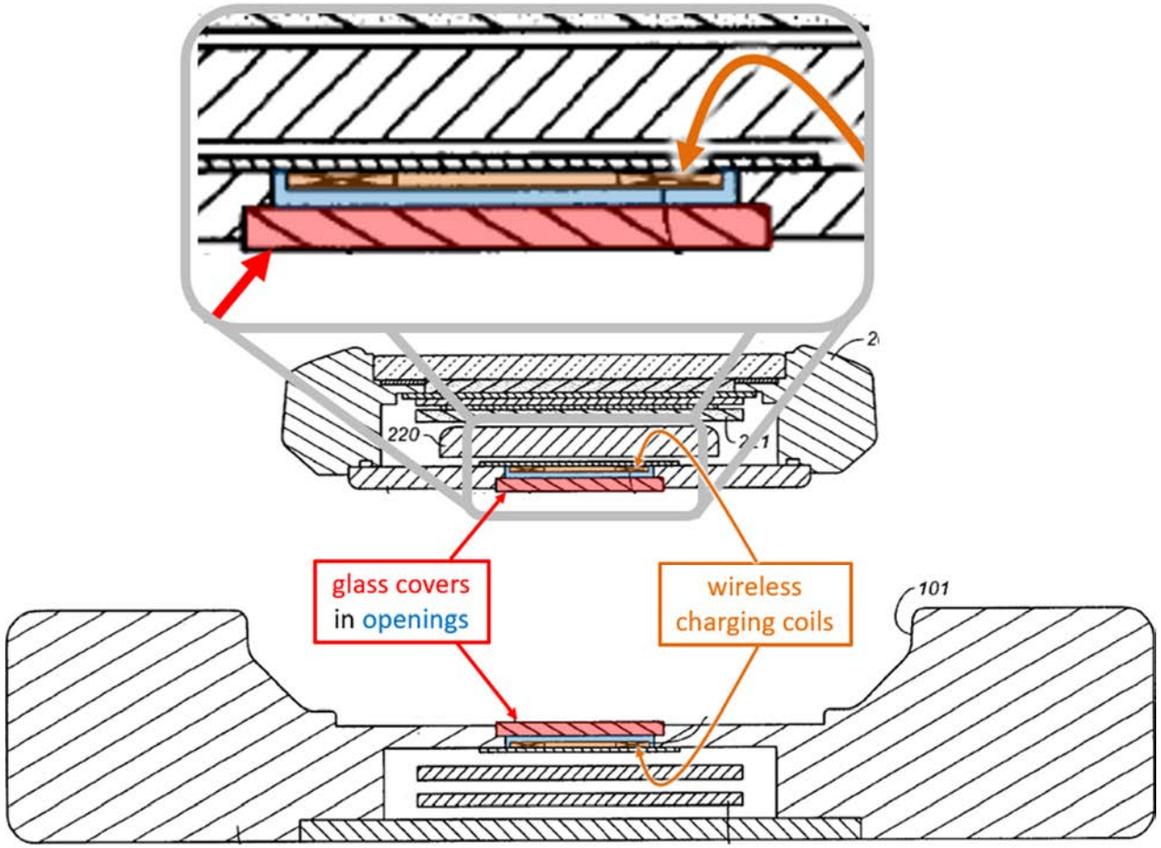

Pet. at 24; *see* EX1006 (Fig. 2)

"a battery operably coupled to the wireless charging receive coil"

Kotanagi:

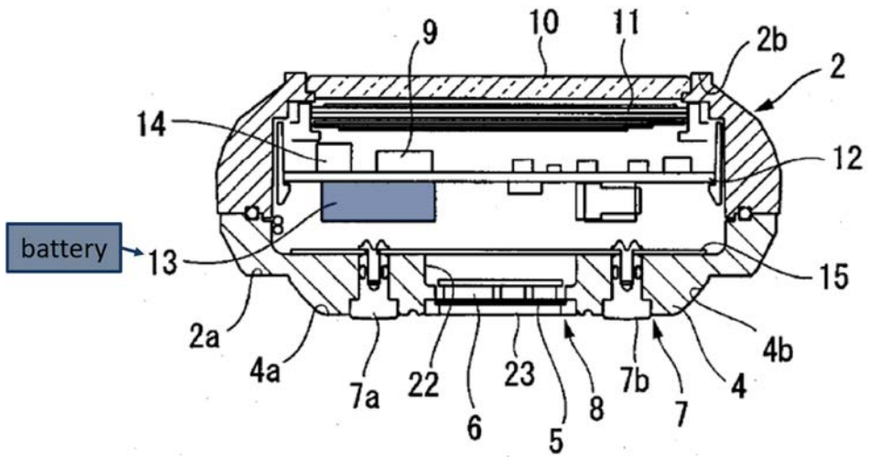

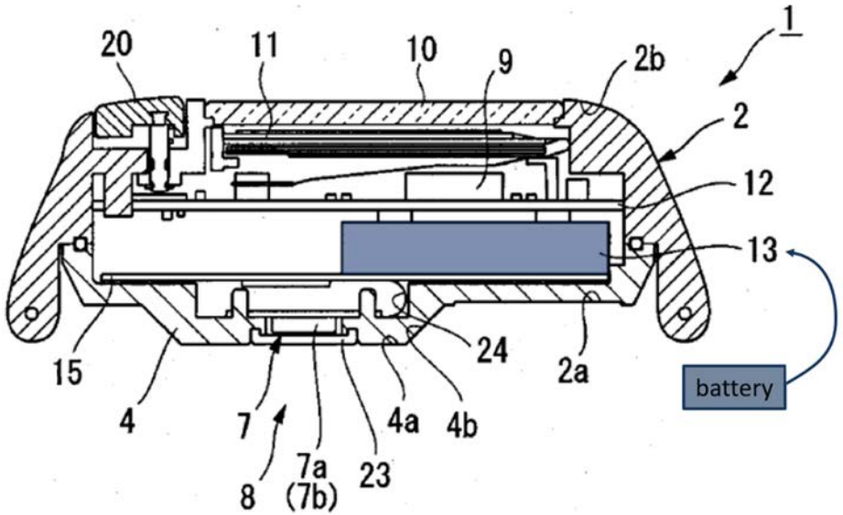

"a battery operably coupled to the wireless charging receive coil"

Honda:

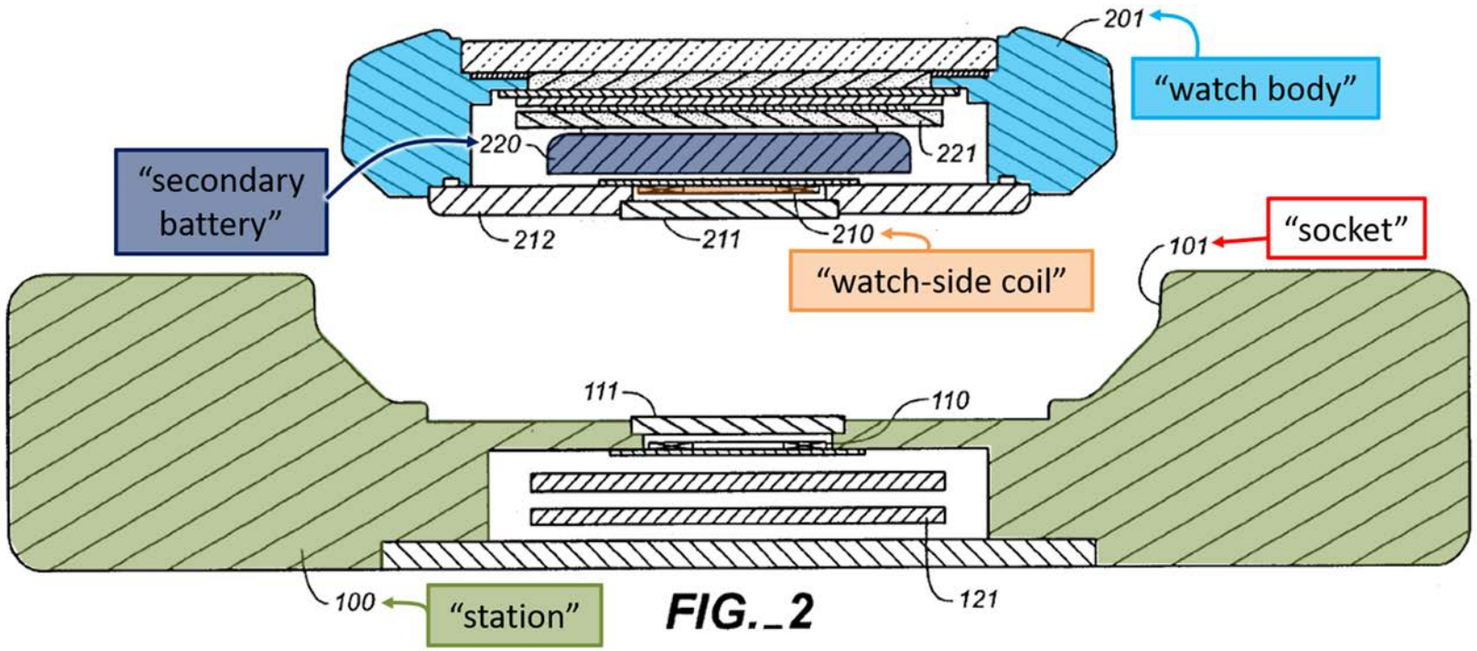

"a cover disposed over the biosensor module [and] configured to pass optical signals to and from the biosensor module"

Kotanagi:

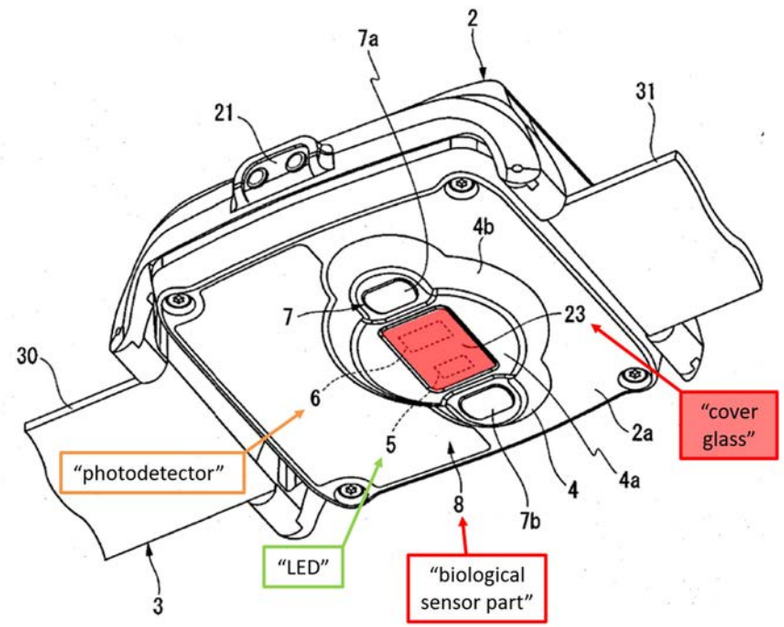

"LED 5 [emits light] toward the living body. A portion . . . is absorbed, . . . and another portion . . . is reflected . . . . The PD 6 receives this reflected light, generates a pulse signal (biological information signal) . . . ."

Pet. at 27; EX1005 (Fig. 5), ¶ 65

"the cover is configured to pass wireless power to the wireless charging receive coil."

Honda:

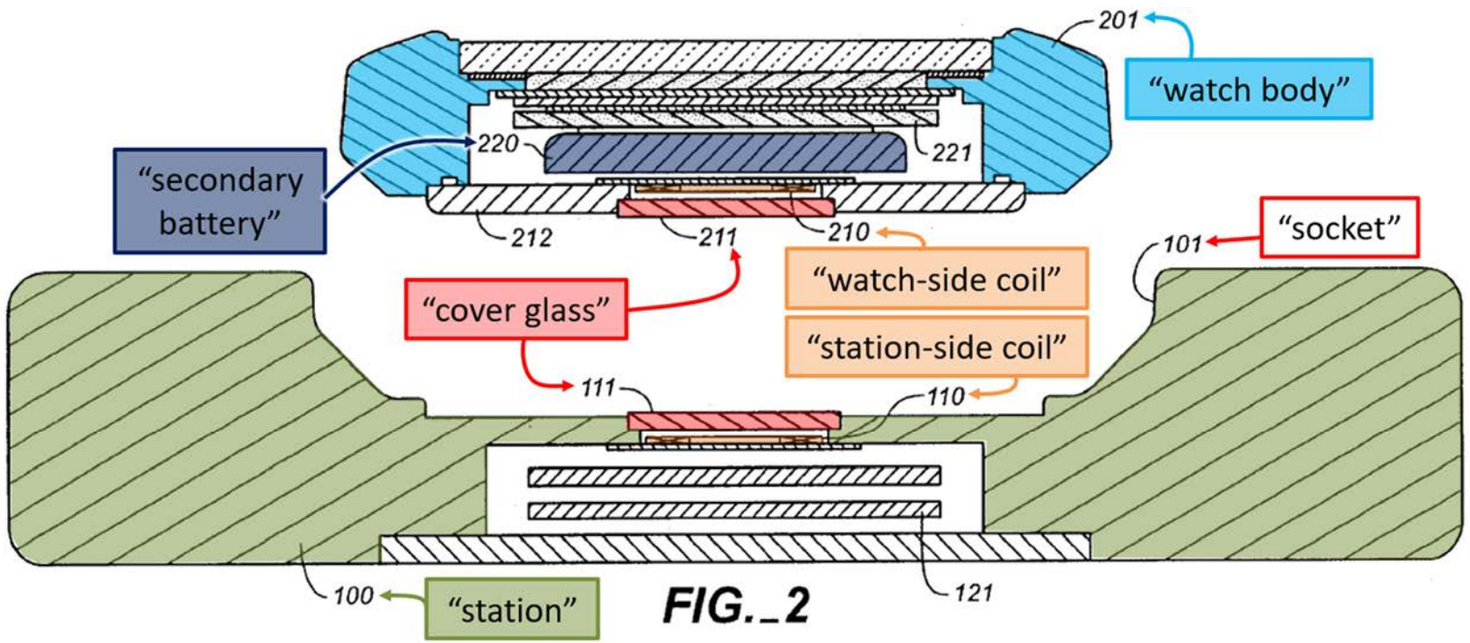

"the cover is configured to pass wireless power to the wireless charging receive coil."

Honda:

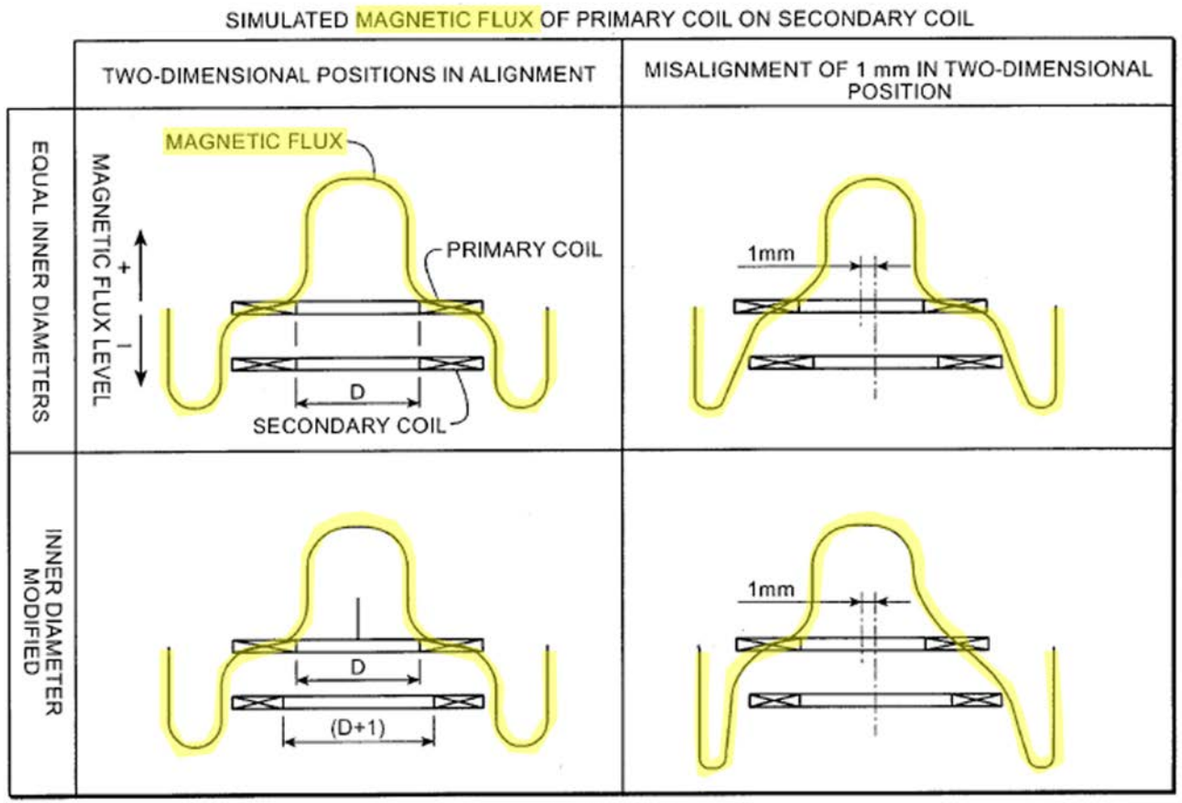

FIG._10

’783 Claim 15: Invalid Similarly to Claim 9

For Claim 15, Apple repeats its Claim 9 arguments. Kotanagi and Honda also invalidate this claim.

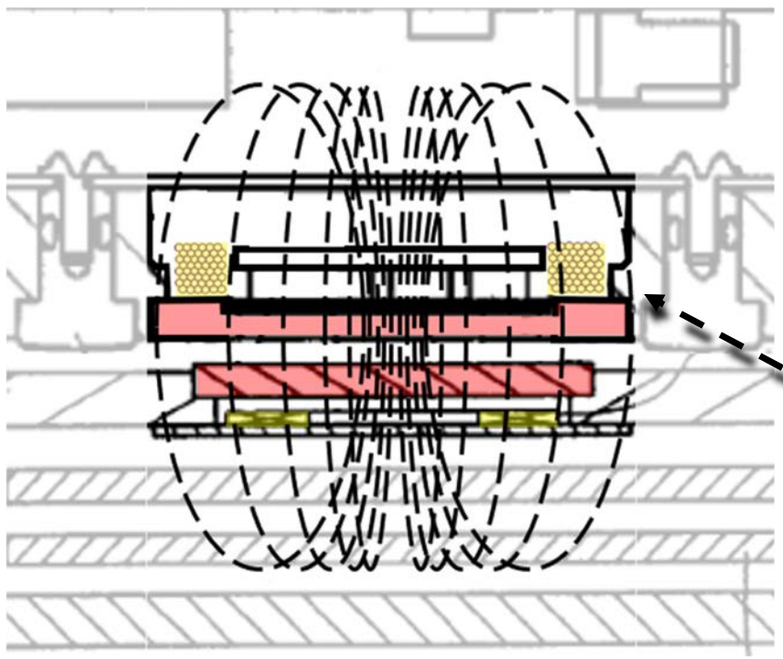

Claim 15

An electronic watch, comprising:

a housing defining an interior cavity and a bottom portion having an opening;

a band attached to the housing and configured to secure the electronic watch to a user;

a biosensor module positioned along the bottom portion of the housing and configured to transmit optical signals and receive reflected optical signals through the opening of the housing; and

a wireless charging receive coil positioned within the interior cavity and configured to receive wireless power through the opening of the housing.

Pet. at 41–50; POR at 56–59; '783 Reply at 24, 28; *see* EX1005 (Fig. 7)

’783 Claim 1: Invalid Similarly to Claim 9

Kotanagi:

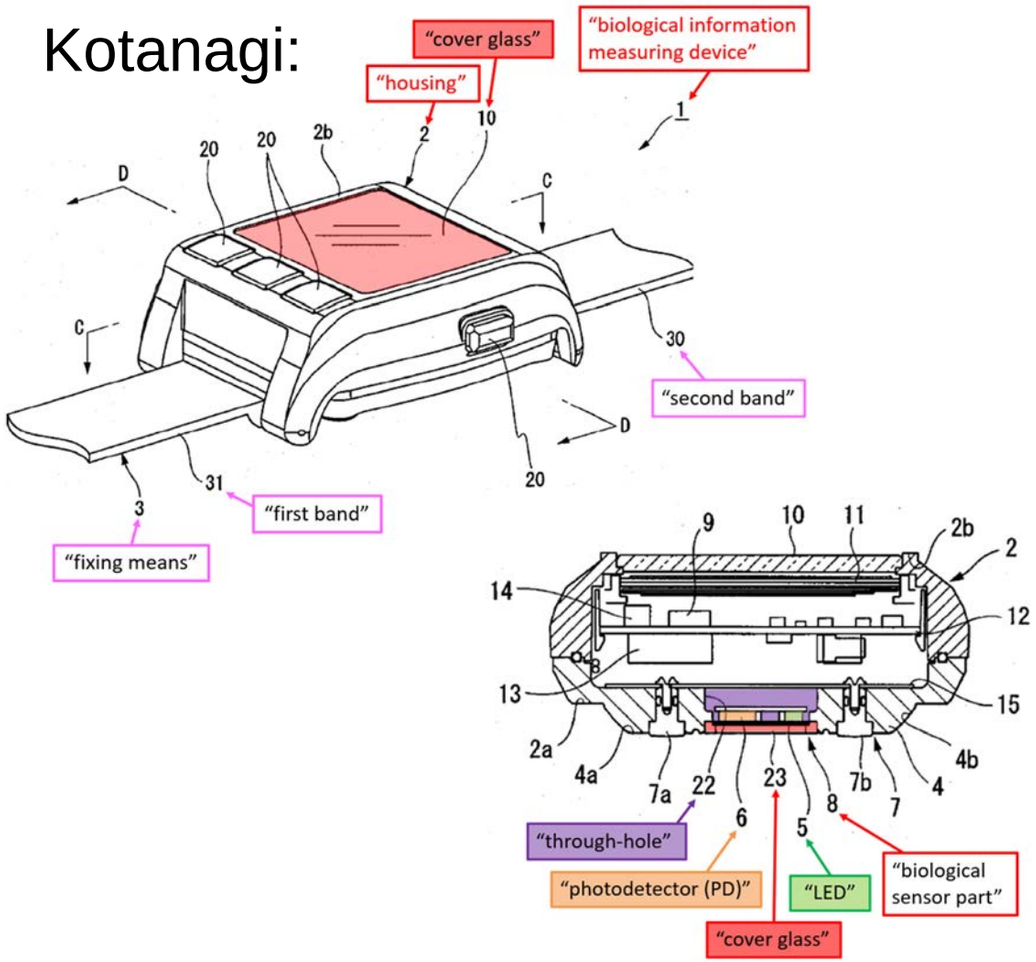

Claim 1

An electronic device, comprising:

a housing defining a first opening opposite to a second opening;

a band attached to the housing and configured to secure the electronic device to a user;

a display positioned in the first opening;

a ceramic cover disposed over the second opening and forming a portion of an exterior surface of the electronic device;

a biosensor module disposed within the second opening below the ceramic cover; and

. . .

Pet. at 57–69; '783 Reply at 32; *see* EX1005 (Figs. 4, 7)

’783 Claim 1: Invalid Similarly to Claim 9

For Claim 1, Apple repeats its Claim 9 arguments. Kotanagi and Honda also invalidate this claim.

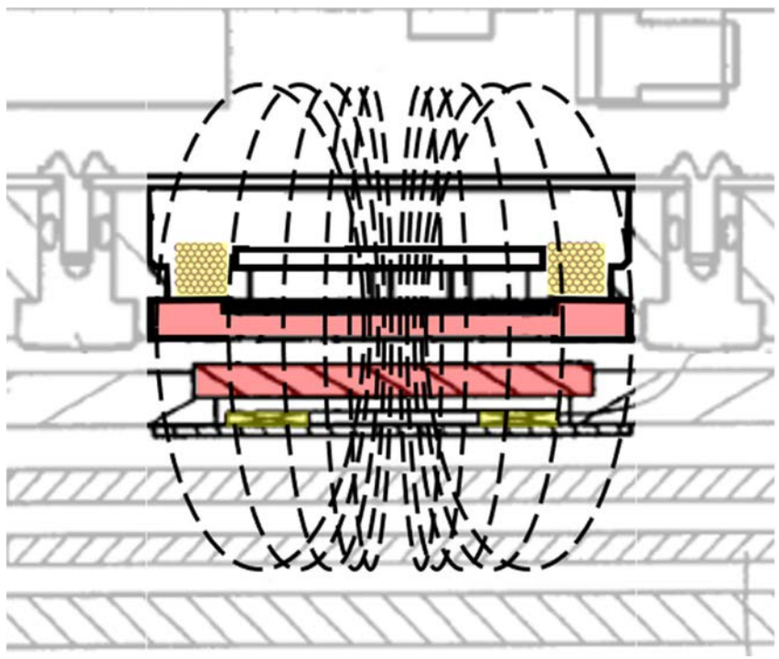

Claim 1 (cont’d)

. . .

a wireless charging receive coil aligned with the second opening and below the ceramic cover;

wherein:

the ceramic cover is configured to pass optical signals generated by the biosensor module; and

the ceramic cover is configured to pass wireless power from an external wireless charging device to the wireless charging receive coil.

POR at 66–68; Pet. at 57–69; '783 Reply at 32, 24; *see* EX1005, Fig. 7.

’783 Claim 2

Kotanagi:

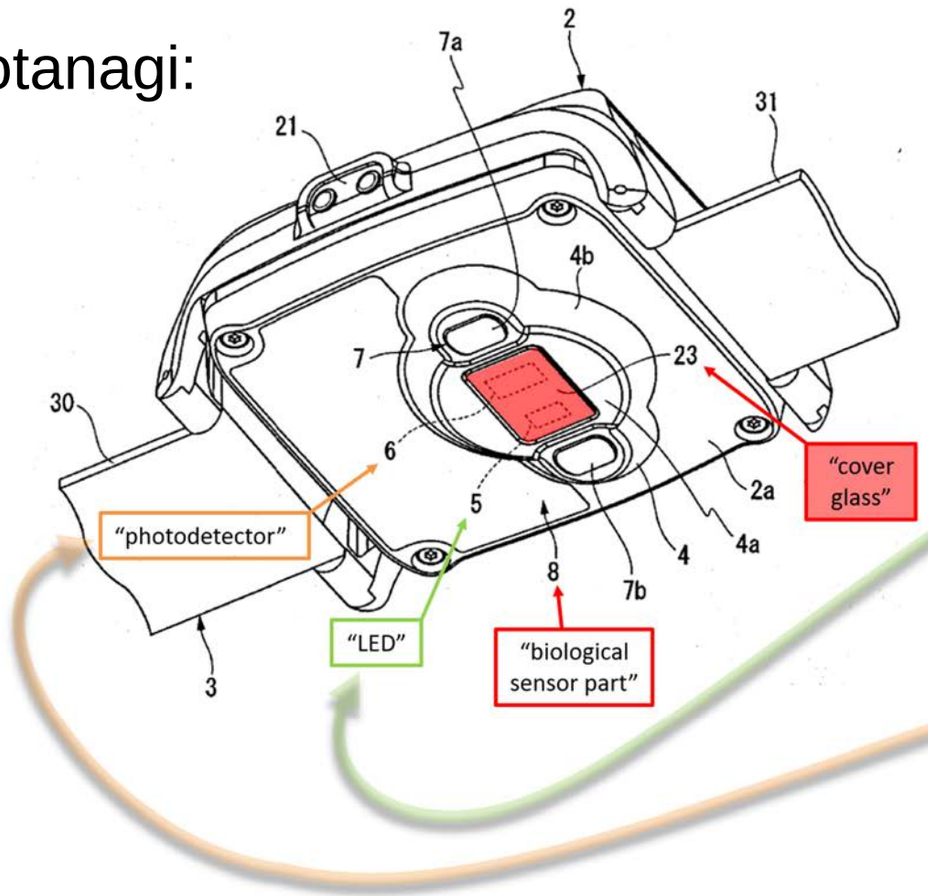

<u>Claim 2</u>

The electronic device of claim 1, wherein the biosensor module comprises:

a light source configured to emit light toward a region of skin of the user; and

a detector configured to receive light reflected from the region of skin.

’783 Claim 3

’783 Patent:

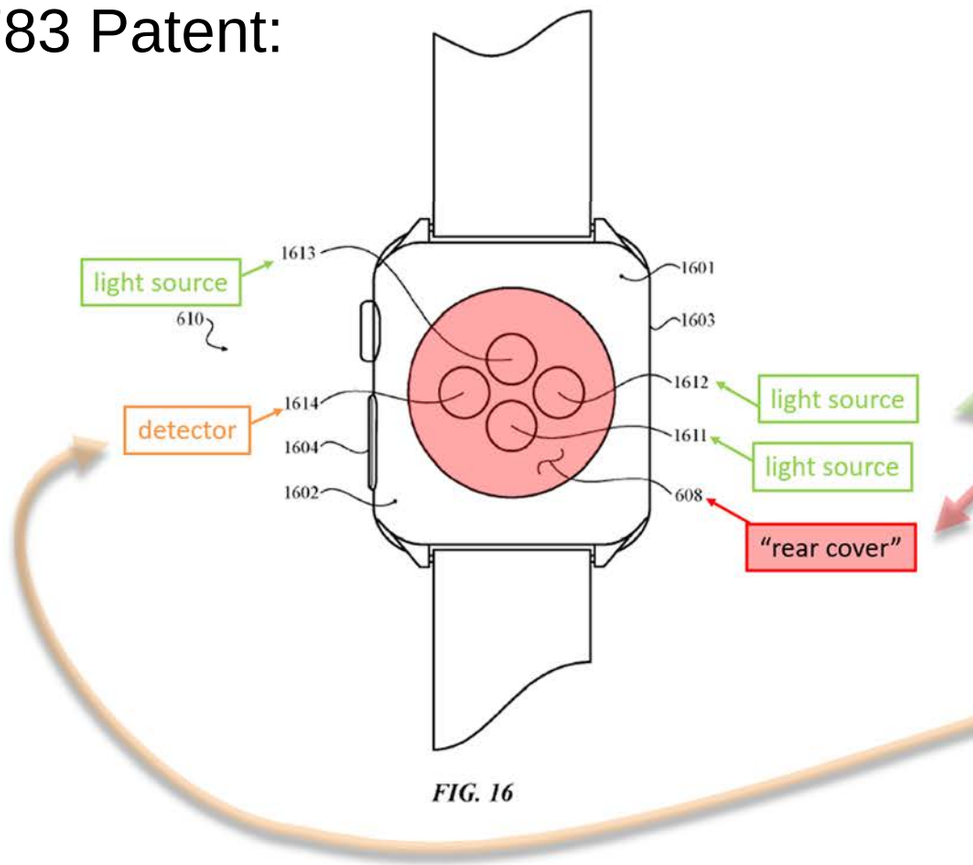

<u>Claim 3</u>

The electronic device of claim 2, wherein:

the ceramic cover defines a first opening to transmit the light from the light source; and the ceramic cover defines a second opening to receive the light reflected from the region of skin.

’783 Claim 3

Kotanagi:

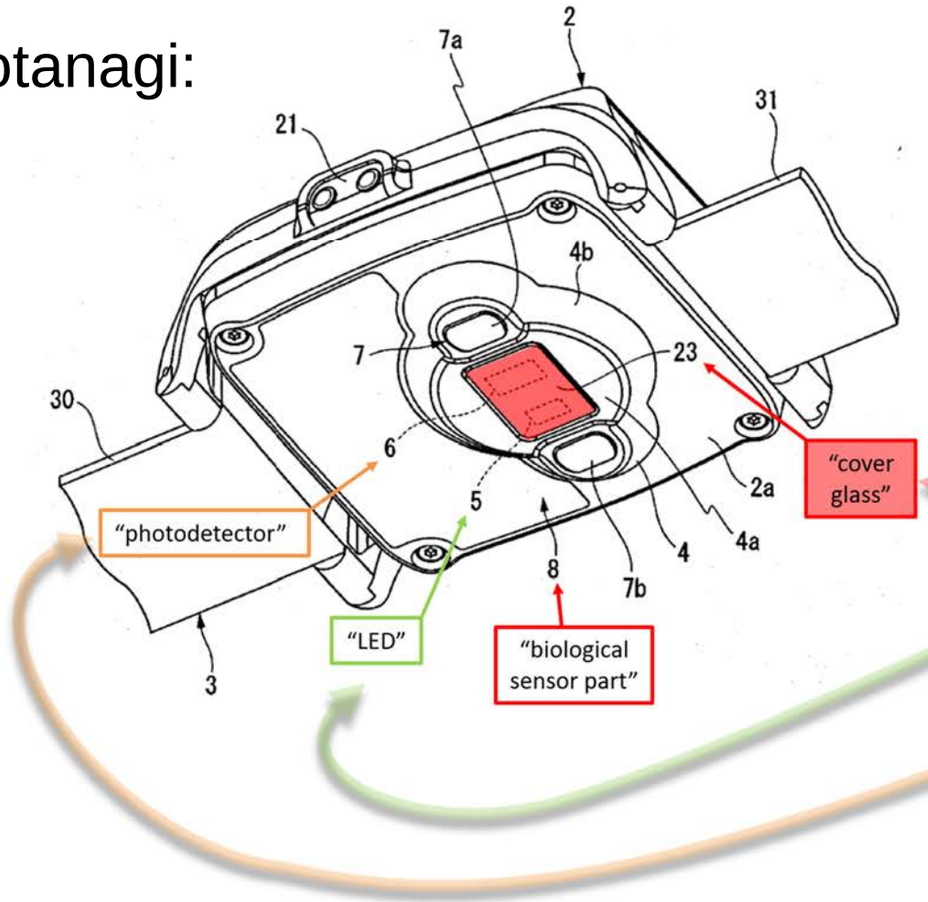

<u>Claim 3</u>

The electronic device of claim 2, wherein:

the ceramic cover defines a first opening to transmit the light from the light source; and the ceramic cover defines a second opening to receive the light reflected from the region of skin.

’783 Claim 4

The watch of Kotanagi:

> “…emits light from the LED 5 toward the living body. A portion of the emitted light is absorbed, for example, by hemoglobin in blood vessels, and another portion of the light is reflected by biological tissue. The PD 6 receives this reflected light, generates a pulse signal (biological information signal) corresponding to the amount of received light, and outputs the signal to the data processing part 9.”

<u>Claim 4</u>

The electronic device of claim 2, wherein:

the light source and the detector are configured to measure changes in light absorption by the region of skin;

the electronic device is configured to compute a health metric using the measured change in light absorption; and

the display is configured to display information associated with the health metric.

Pet. at 74–76; EX1005 ¶ (0065); '783 Reply at 36

’783 Claim 5

Kotanagi:

> “since the amount of reflected light out of the light emitted from the LED 5 varies depending on fluctuations in blood flow within arteries and arterioles in the wrist A (living body), the PD 6 can receive reflected light corresponding to the pulsation of arteries—that is, pulse waves. As a result, the PD 6 can generate a pulse signal.”

<u>Claim 5</u>

The electronic device of claim 2, wherein the light source and the detectors are configured to operate as a photoplethysmogram (PPG) sensor.

Pet. at 76–77; EX1005 ¶ (0065); '783
Reply at 36

’783 Claim 7

Kotanagi:

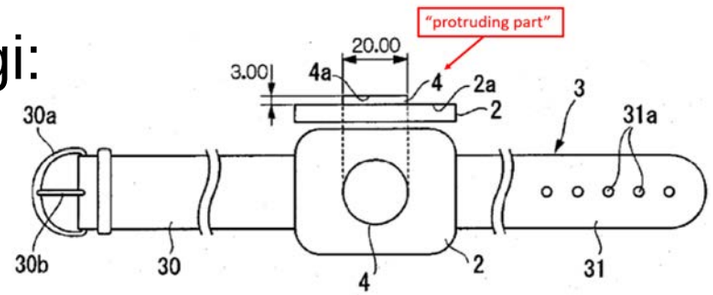

Honda:

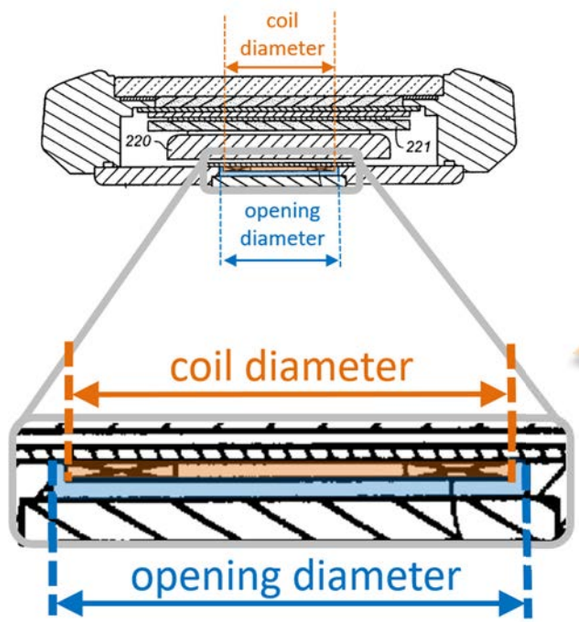

<u>Claim 7</u>

The electronic device of claim 1, wherein:

the second opening has an opening diameter;

the wireless charging receive coil has a coil diameter that is less than the opening diameter; and

. . .

’783 Claim 7

Honda:

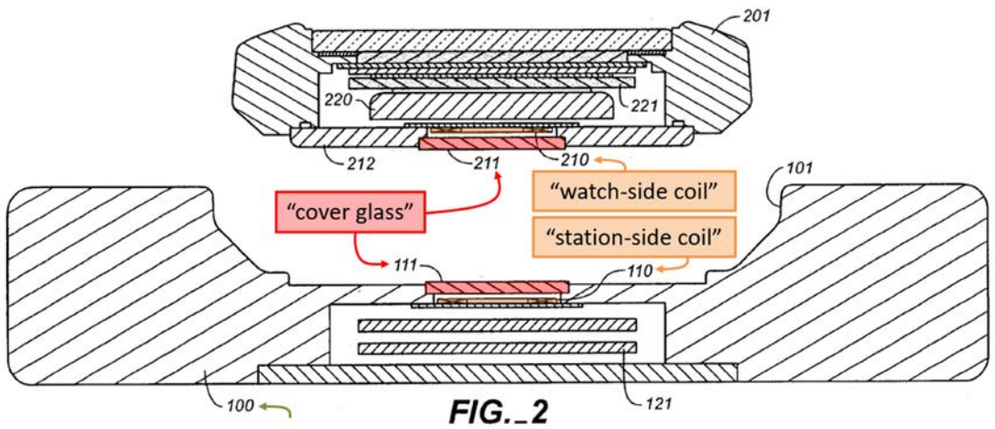

FIG._2

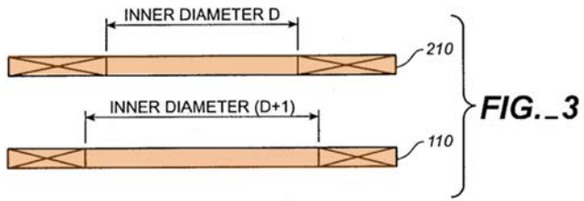

FIG._3

Claim 7 (cont’d)

. . .

the wireless charging receive coil is configured to receive the wireless power through the second opening.

’783 Claim 8

Kotanagi:

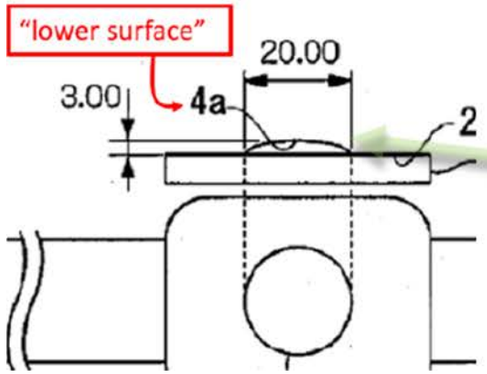

Honda:

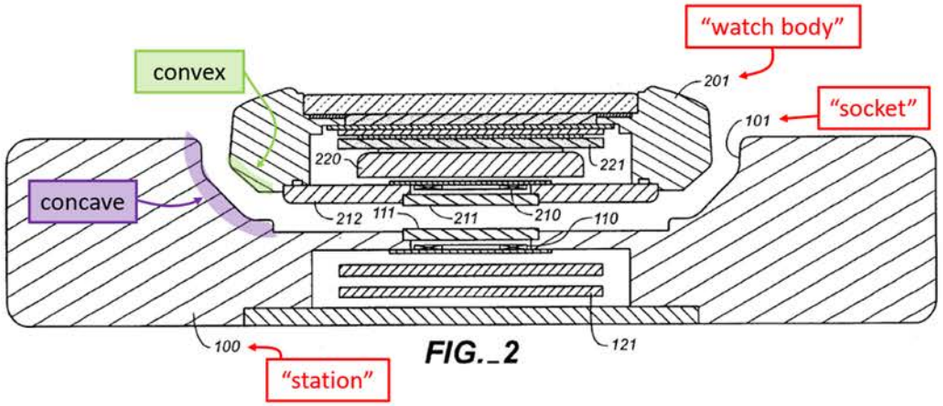

Claim 8

The electronic device of claim 1, wherein:

the ceramic cover has a convex contoured shape that protrudes toward the user; and

the convex contoured shape facilitates alignment between the ceramic cover and a mating surface of the external wireless charging device.

’783 Claim 8

Kotanagi + Honda:

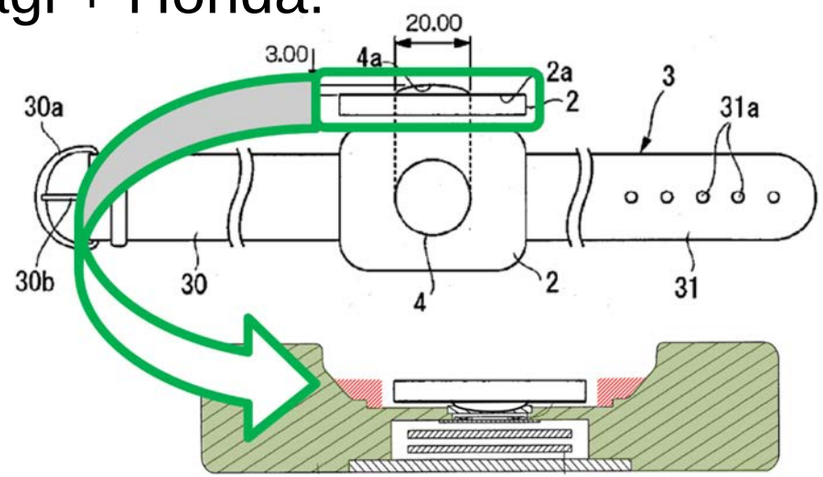

Park:

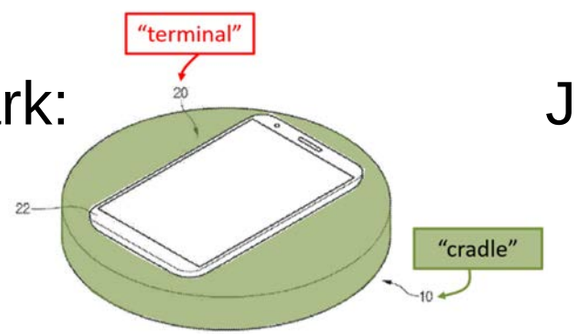

Jabori:

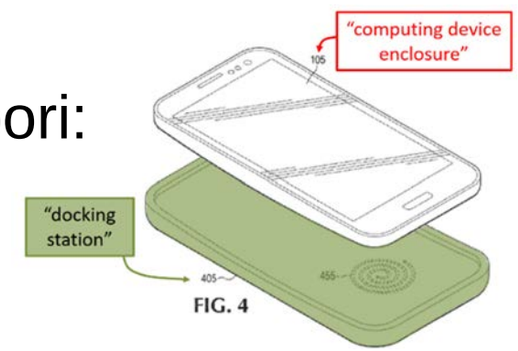

<u>Claim 8</u>

The electronic device of claim 1, wherein:

the ceramic cover has a convex contoured shape that protrudes toward the user; and

the convex contoured shape facilitates alignment between the ceramic cover and a mating surface of the external wireless charging device.

’783 Claim 10

Kotanagi:
“housing 2 . . . is made of plastic or a metal material such as aluminum . . .”

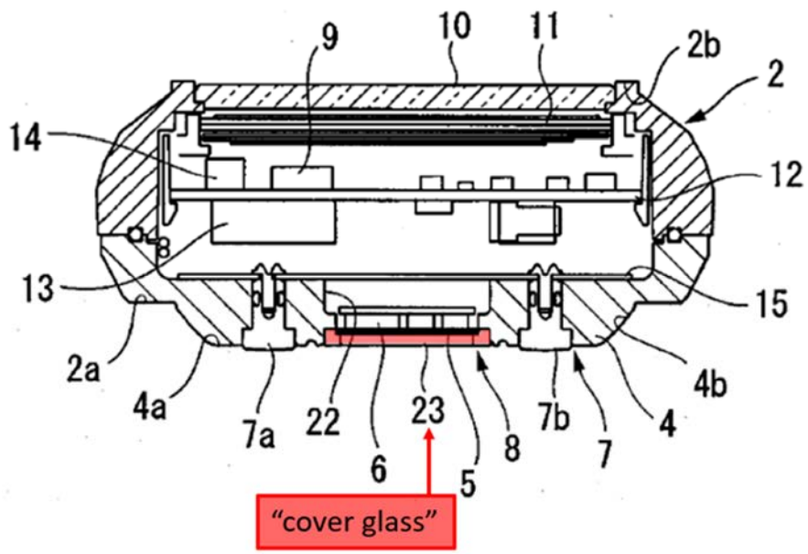

<u>Claim 10</u>
The wearable electronic device of claim 9, wherein:

the housing is formed from a metal material; and

the cover is formed from a non-metal material.

’783 Claim 10

Honda:
“case back 212 (typically made of a metal) and the cover glass 211 are arranged as shown in FIG. 2.”

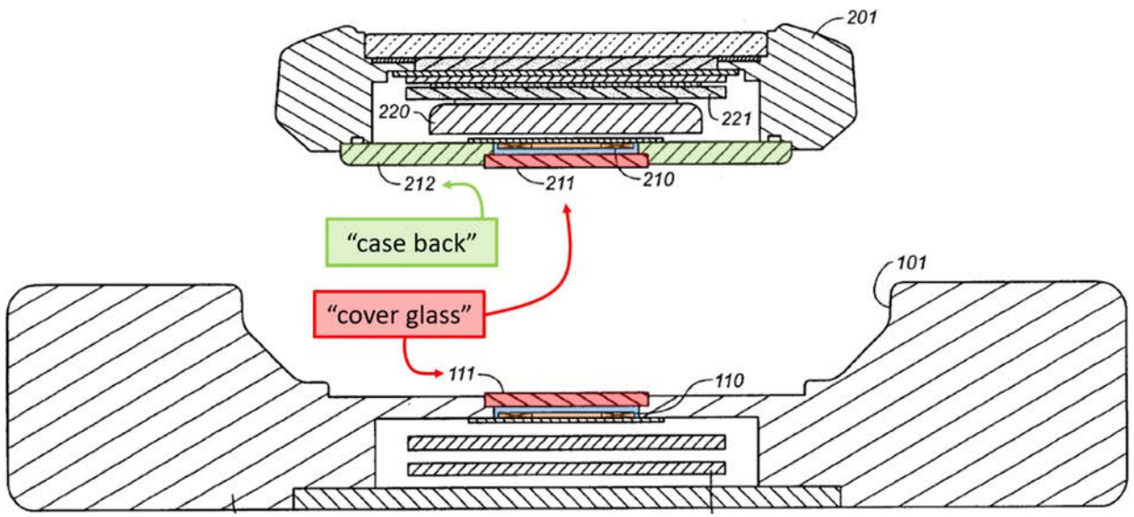

<u>Claim 10</u>

The wearable electronic device of claim 9, wherein:

the housing is formed from a metal material; and

the cover is formed from a non-metal material.

’783 Claim 12: Motivation to Combine

Honda:

- Coil alignment is “required to be accurate.”
- Misalignment reduces or modifies the magnetic flux of the wireless charging field.

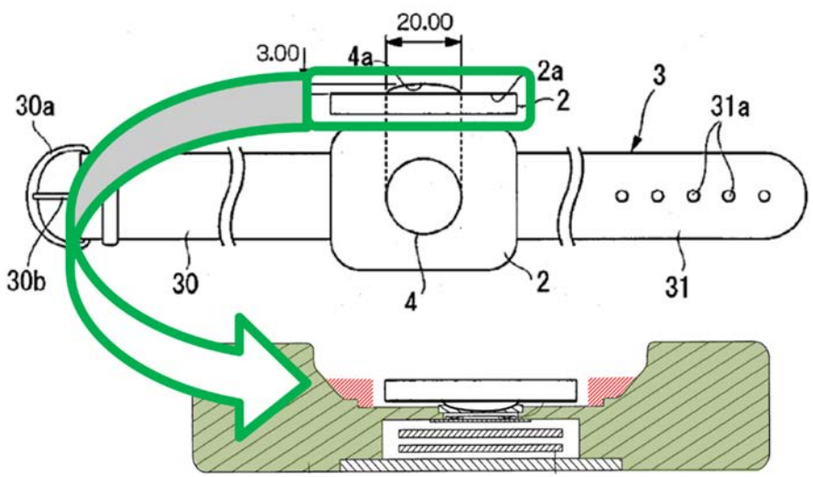

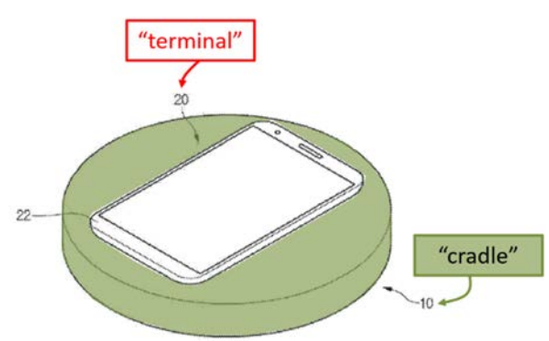

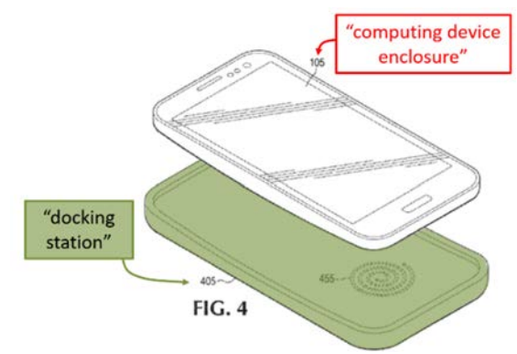

Pet. at 92; EX1005, Fig. 8, EX1006 at 1:53–59, Fig. 2; EX1017, Fig. 4; EX1015, Fig. 6

’783 Claim 12: Motivation to Combine

Jabori:

- Convex and concave shapes “align the wireless power transmitter [] with the wireless power module [].”

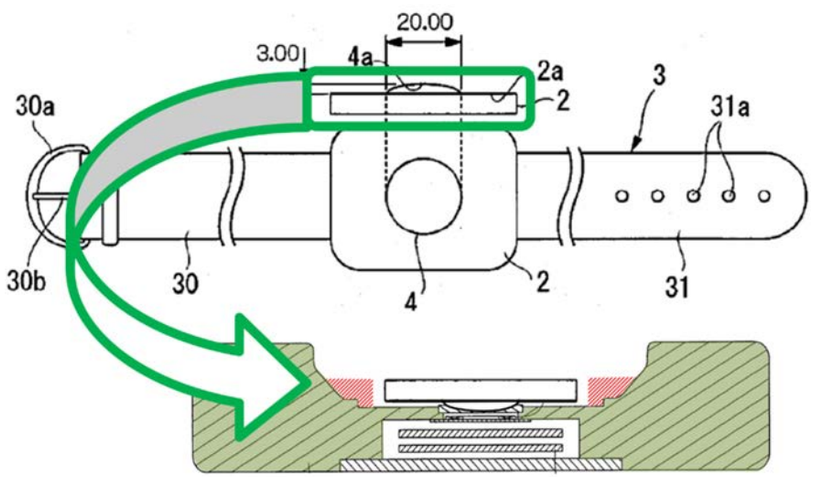

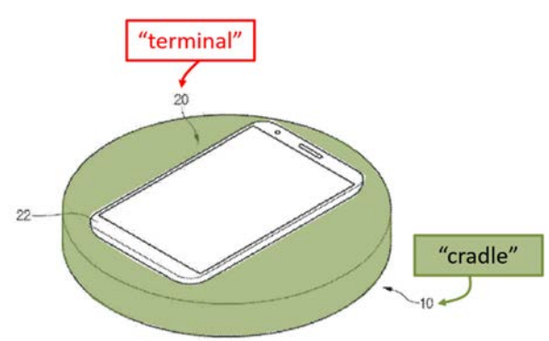

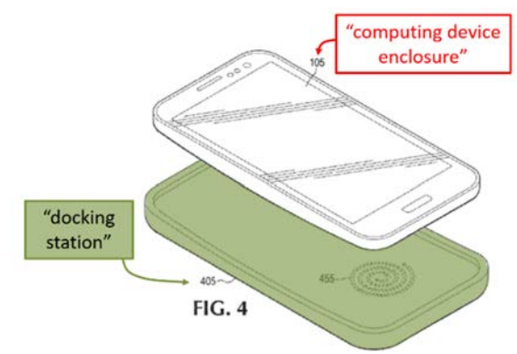

Pet. at 91; EX1005, Fig. 8, EX1006 at 1:53–59, Fig. 2; EX1017 at [0017], Fig. 4; EX1015, Fig. 6

’783 Claim 13: “magnetically coupled to the . . . dock through the cover and the biosensor module.”

Honda: External and internal coils are

- “physically out of contact with each other, but <u>magnetically coupled</u>”
- “magnetically coupled with each other”

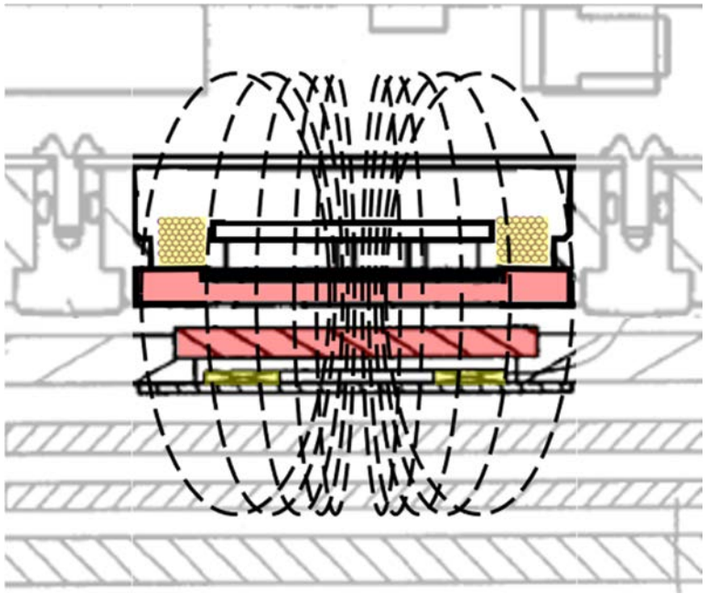

Pet. at 93; '783 Reply at 24, 36; EX1006 col. 6:38–39, *see* Fig. 2; *see* EX1005 (Fig. 7)

’783 Claim 13: “magnetically coupled to the . . . dock through the cover and the biosensor module.”

Park discloses permanent magnets in the watch and dock for more precise alignment and securement, for wireless charging.

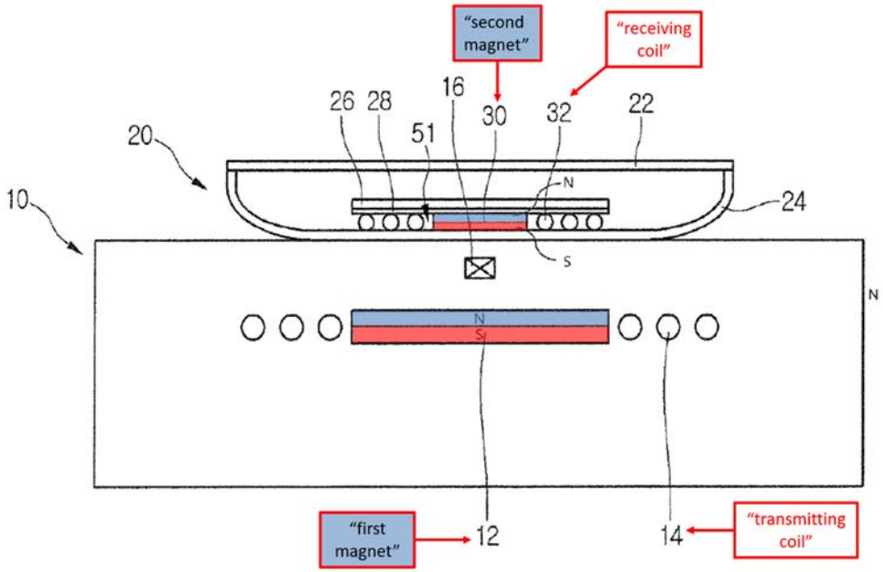

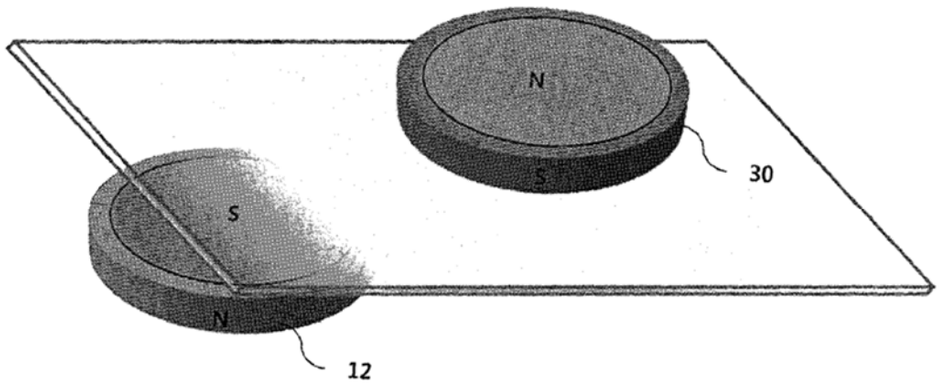

’783 Claim 17

Kotanagi + Honda:

Honda’s watch, with Honda’s station (*see* EX1006 at 3):	Kotanagi’s watch, with Honda’s station (*see* EX1006 at 3, EX1005 at 27):
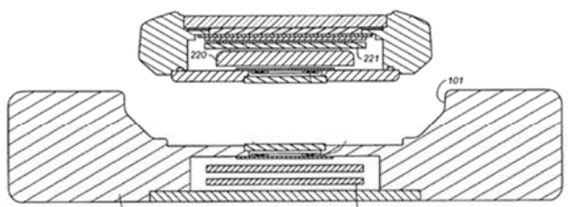	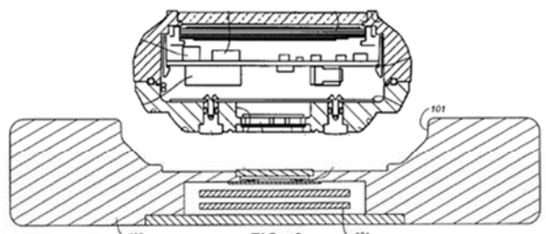

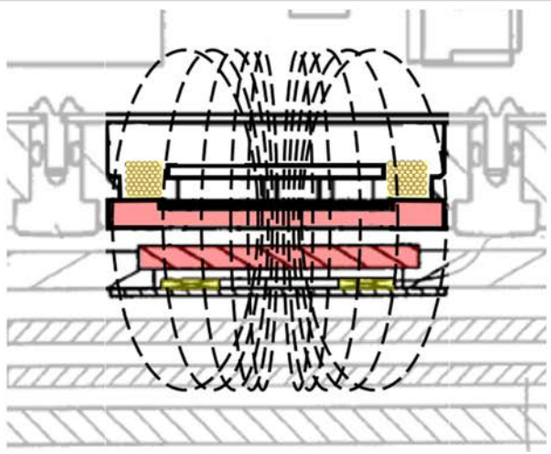

Claim 17

The electronic watch of claim 15, wherein:

the wireless charging receive coil is configured to receive power from an external inductive power transmitter dock;

. . .

Pet. at 94–95; EX1006 (Fig. 2); EX1005 (Fig 7); '783 Reply at 36

’783 Claim 17

Kotanagi:

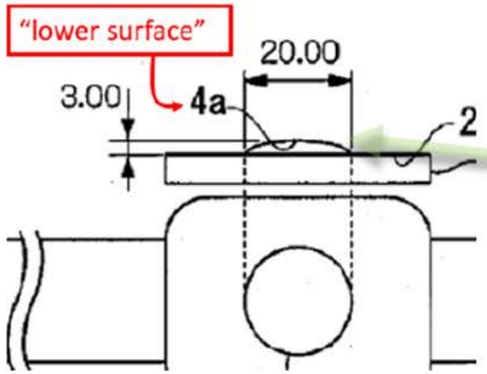

Honda:

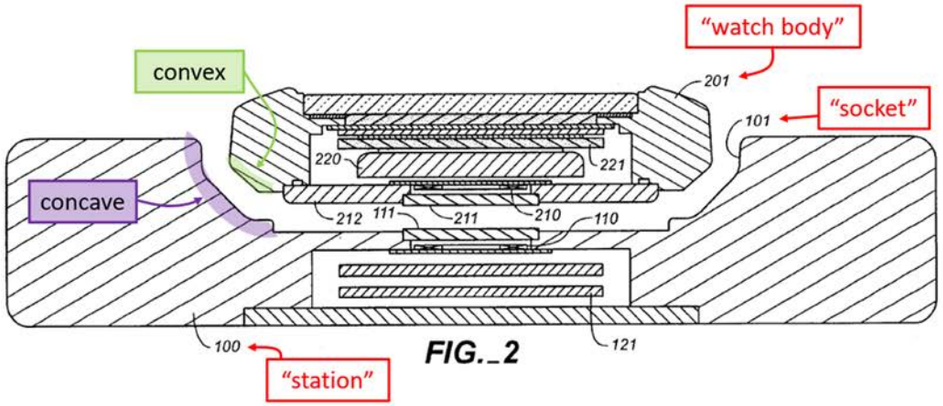

Claim 17

. . .

the electronic watch defines a convex contoured surface along the bottom portion; and

the convex contoured surface is configured to facilitate alignment with a concave contoured surface of the external inductive power transmitter dock.

’783 Claim 17

Kotanagi + Honda:

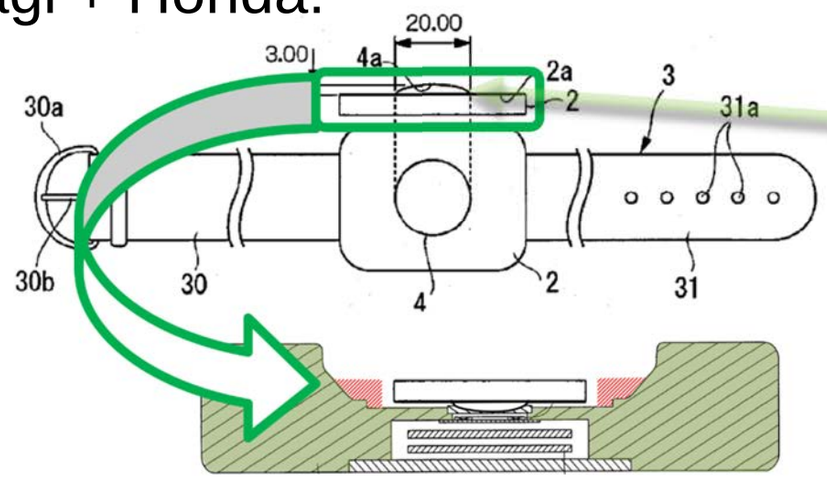

Park:

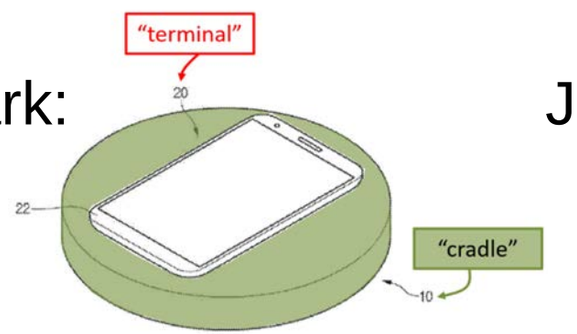

Jabori:

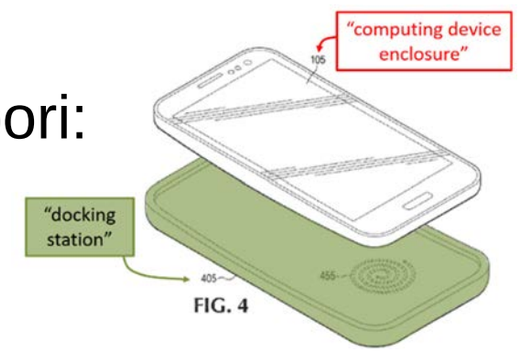

Claim 17

. . .

the electronic watch defines a convex contoured surface along the bottom portion; and

the convex contoured surface is configured to facilitate alignment with a concave contoured surface of the external inductive power transmitter dock.

Pet. at 97–98; '783 Reply at 36

’783 Claim 18

Kotanagi + Honda:

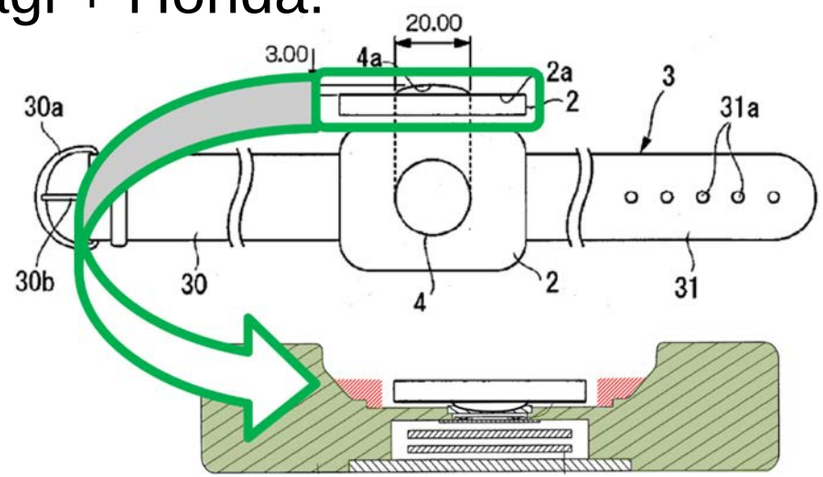

Park:

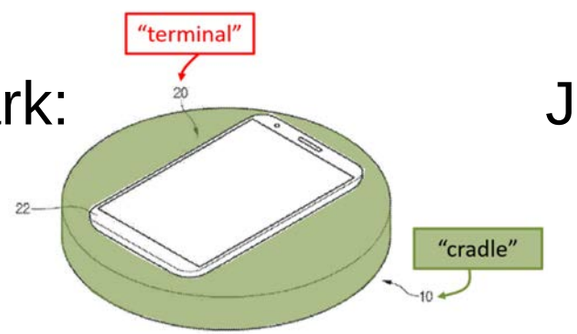

Jabori:

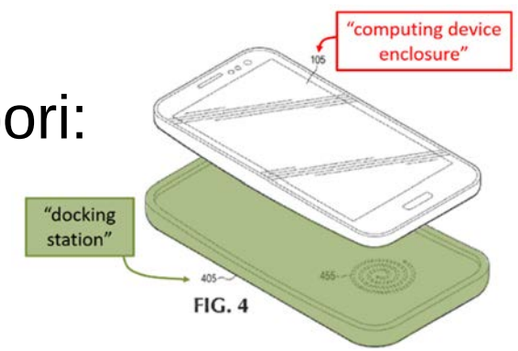

Claim 18

The electronic watch of claim 17, wherein the convex contoured surface is configured to protrude toward a portion of skin of the user when the electronic watch is worn.

Pet. at 97–98; '783 Reply at 36

’783 Claim 19

Kotanagi:

LED and PD generate a “pulse signal (biological information signal)”

Honda:

“detects biological information including the pulse rate or the heart rate of the body.”

Claim 19

The electronic watch of claim 15, wherein:

the electronic watch is configured to compute a health metric using the biosensor module; and

the health metric is one or more of: a heart rate, a respiration rate, a blood oxygenation level, a blood volume estimate, or blood pressure.

Pet. at 50–51; EX1005 ¶ (0046) ; EX1006 col. 6:17–19; '783 Reply at 36

’783 Claim 20

Kotanagi:
“display part 11” is “for displaying the aforementioned pulse rate.”

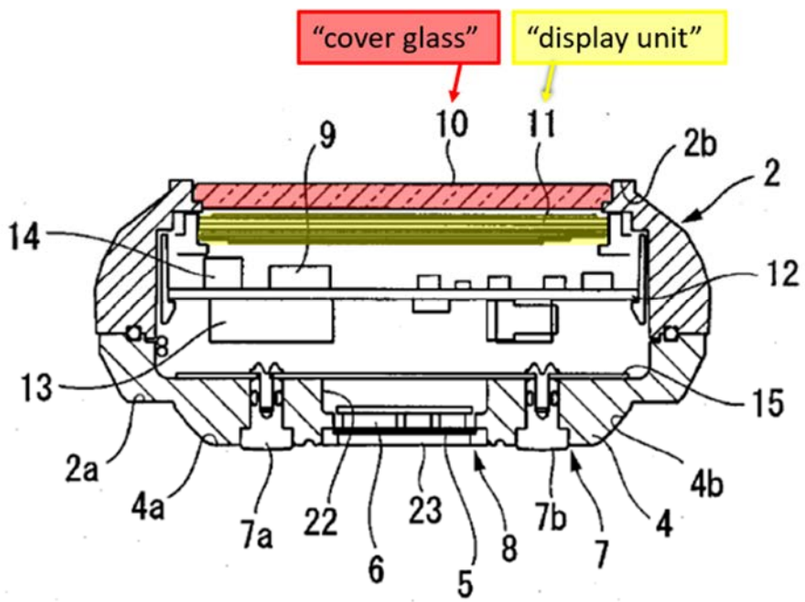

Claim 20
The electronic watch of claim 19, wherein:

the electronic watch includes a display; and

the display is configured to display information associated with the health metric.

Pet. at 51–52; EX1005 ¶ (0048), Fig. 7; '783 Reply at 36

Knobbe Martens

Petitioner Masimo Corporation's Demonstratives For Oral Hearing

July 9, 2024

Apple Inc. v. Masimo Corporation

IPR2023-00634

IPR2023-00734