Trials@uspto.gov
571-272-7822

Paper 34
Date: September 23, 2024

UNITED STATES PATENT AND TRADEMARK OFFICE

BEFORE THE PATENT TRIAL AND APPEAL BOARD

MASIMO CORPORATION,
Petitioner,

v.

APPLE INC.,
Patent Owner.

IPR2023-00634
Patent 10,627,783 B2

Before KEN B. BARRETT, JOSIAH C. COCKS, and
ROBERT L. KINDER, *Administrative Patent Judges*.

BARRETT, *Administrative Patent Judge*.

JUDGMENT
Final Written Decision
Determining Some Challenged Claims Unpatentable
*35 U.S.C. § 318(a)*

# I. INTRODUCTION

## *A. Background and Summary*

Masimo Corporation ("Petitioner")[1] filed a Petition requesting *inter partes* review of U.S. Patent No. 10,627,783 B2 ("the '783 patent," Ex. 1001). Paper 1 ("Pet."). The Petition challenges the patentability of claims 1–20 of the '783 patent. We instituted an *inter partes* review of all challenged claims on all proposed grounds of unpatentability. Paper 14. Apple, Inc. ("Patent Owner")[2] filed a Response to the Petition. Paper 18 ("PO Resp."). Petitioner filed a Reply (Paper 22, "Pet. Reply") and Patent Owner filed a Sur-reply (Paper 30, "PO Sur-reply").

An oral hearing was held on July 9, 2024, and a transcript of the hearing is included in the record. Paper 33 ("Tr.").

This Final Written Decision is entered pursuant to 35 U.S.C. § 318(a). For the reasons discussed below, we determine that Petitioner has shown by a preponderance of the evidence that claims 1–5, 9, 10, 14, 15, and 17–20 of the '783 patent are unpatentable, but Petitioner has *not* shown by a preponderance of the evidence that claims 6–8, 11–13, and 16 of the '783 patent are unpatentable.

## *B. Related Proceedings*

Both parties identify, as a matter involving or related to the '783 patent, *Apple Inc. v. Masimo Corporation and Sound United, LLC*, No. 1:22-cv-01378-MN (D. Del.). Pet. 7; Paper 3. Patent Owner also states that "[p]rosecution is ongoing in four patent applications that are

---

[1] Petitioner identifies Masimo Corporation as the real party in interest. Pet. 7.
[2] Patent Owner identifies Apple Inc. as the real party in interest. Paper 3.

continuations of the ’783 Patent,” and identifies those as: No. 17/188,995; No. 17/951,973; No. 18/075,253; and No. 18/119,175. Paper 8, 11–12.

*C. The ’783 Patent*

The ’783 patent pertains to “a wearable electronic device having a range of features, including touch input, force input, an interchangeable attachment system, health monitoring functionality, wireless power charging, wireless authentication and transaction functionality, and other features and functionality.” Ex. 1001, 1:19–25. A wristwatch is an example of the wearable electronic device. *See id.* at 6:55–67. According to the ’783 patent, “some traditional portable electronic devices, particularly wearable electronic devices, may have relatively limited functionality or are only able to perform a specialized set of functions or tasks.” *Id.* at 1:32–36. The Specification states that it addresses this by describing embodiments that “are directed to a wearable electronic device that provides a wide range of functionality, as compared to some traditional wearable electronic devices.” *Id.* at 1:39–42.

Figure 8 of the ’783 patent is reproduced below.

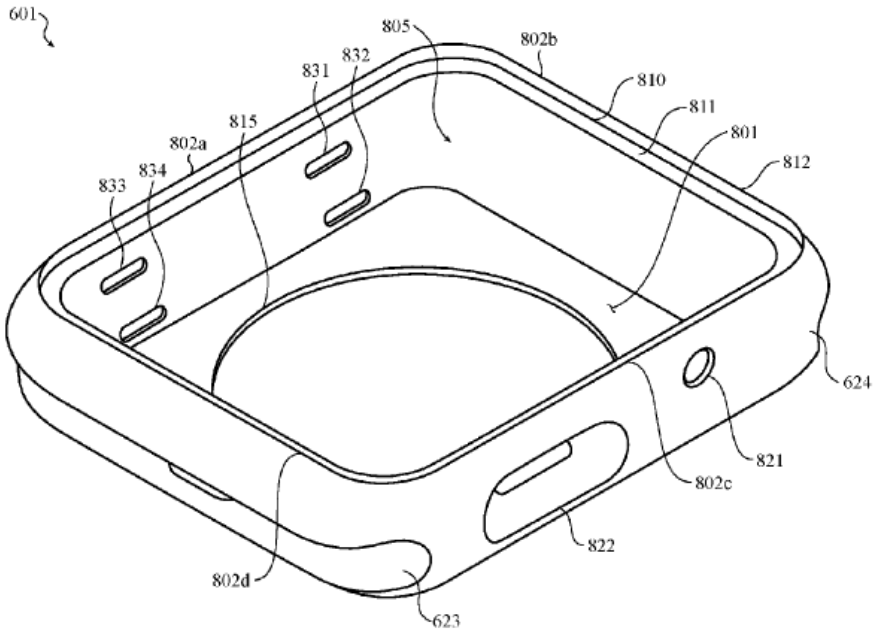


*FIG. 8*

Figure 8 “depicts an example housing for a wearable electronic device.” *Id.* at 6:11–12. As shown, an opening or aperture 815 is formed in bottom portion 801 of housing 601. *Id.* at 30:65–66

> In some example embodiments, the device includes a biosensor module that is disposed in an opening formed in the flat bottom portion of the housing. The biosensor module may include a chassis positioned in the opening of the housing and defining an array of windows. An array of light sources may be attached to the chassis and configured to emit light into the user through the array of windows. The biosensor module may also include an optically transparent rear cover disposed over the chassis and over the array of windows and operative to pass light emitted from the array of light sources into the user.

*Id.* at 2:44–54.

Figure 16 of the ’783 patent is reproduced below.

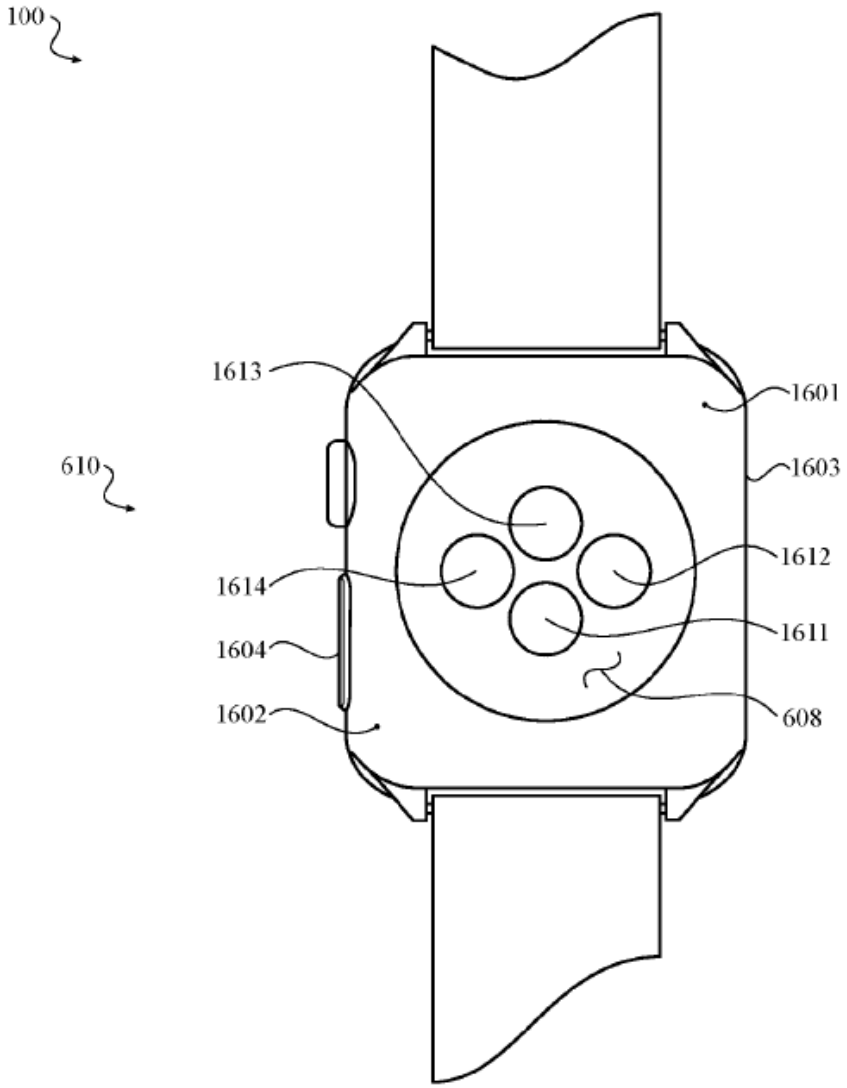


***FIG. 16***

Figure 16 “depicts an example device having biosensors.” *Id.* at 6:25. Shown is an array of light sources 1611–1613 and detector 1614 that, together, may be configured to function as an optical sensor such as a photoplethysmography (PPG) sensor, which may be used to compute, for example, heart rate. *Id.* at 38:23–26, 38:37–41, 38:65–39:2. Also shown are first electrode 1601 and second electrode 1602 disposed on the rear face of the device 100 and that may be configured to make contact with the skin of

the user's wrist when the device is being worn. *Id.* at 39:40–46. "[T]he electrodes may be configured to detect electrical activity produced by the heart of the user to measure heart function or produce an electrocardiograph (ECG)." *Id.* at 39:67–40:3.

> The device may also include a receive coil within the housing configured to inductively couple with an external transmit coil. A power conditioning circuit may be configured to recharge the rechargeable battery using power received by the receive coil. . . . The device may also include a first alignment magnet positioned within the receive coil and configured to align the device with respect to a second alignment magnet positioned within the external transmit coil.

*Id.* at 5:31–40.

Figure 18 of the '783 patent is reproduced below.

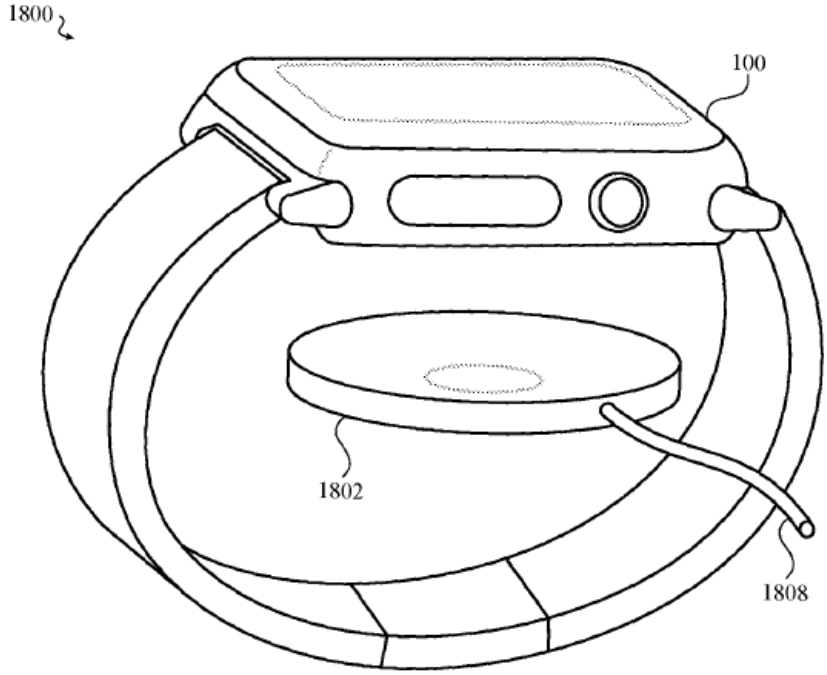


***FIG. 18***

Figure 18 "depicts a front perspective view of an example wireless power transfer system 1800 in an unmated configuration" and "shows an inductive

power transmitter dock 1802 that is configured to couple to and wirelessly transmit power to an inductive power receiver accessory, in this case device 100." *Id.* at 43:5–10.

Figure 19 of the '783 patent is reproduced below.

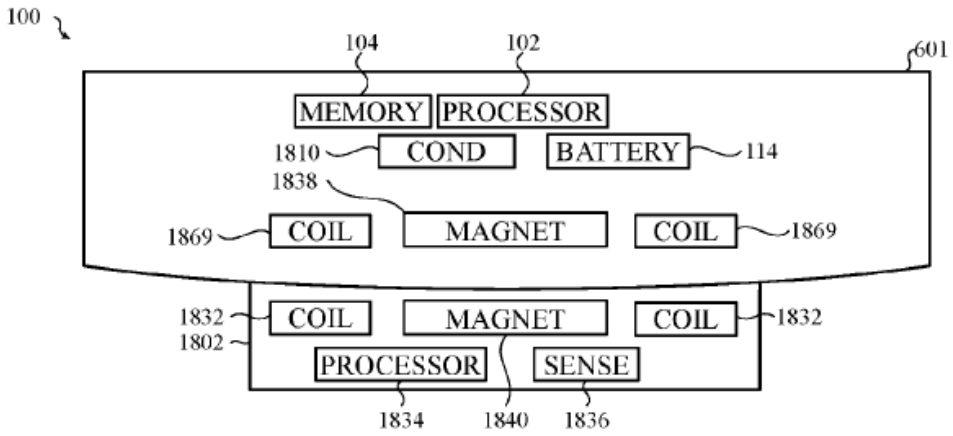


***FIG. 19***

Figure 19 "depicts a block diagram of an example inductive charging system." *Id.* at 6:30–31. "[T]he device 100 includes a receive coil 1869 having one or more windings for inductively coupling with a transmit coil 1832 of the dock 1802." *Id.* at 44:41–43. "The receive coil 1869 may receive power wirelessly from the dock 1802 and may pass the received power to a battery 114 within the device 100 via power conditioning circuit 1810." *Id.* at 44:43–46.

*D. Illustrative Claim*

Of the challenged claims of the '783 patent, claims 1, 9, and 15 are independent claims. Claim 9 reproduced below with Petitioner's annotations[3] inserted is illustrative.

---

[3] We utilize Petitioner's annotations for claim 9 but have retained the paragraph formatting from the issued patent.

9. [9a] A wearable electronic device, comprising:
a housing comprising a bottom portion defining an opening;
[9b] a biosensor module aligned with the opening;
[9c] a wireless charging receive coil positioned within the housing and aligned with the opening;
[9d] a battery operably coupled to the wireless charging receive coil; and
[9e] a cover disposed over the biosensor module; wherein:
the cover is configured to pass optical signals to and from the biosensor module; and
[9f] the cover is configured to pass wireless power to the wireless charging receive coil.

Ex. 1001, 58:62–59:7.

*E. Evidence*

Petitioner relies on the following references:

| Name | Reference | Exhibit(s) |
|---|---|---|
| Kotanagi | WO 2005/092182 A1, published Oct. 6, 2005 | 1005 |
| Honda | US 6,265,789 B1, issued July 24, 2001 | 1006 |
| Park | US 2015/0214749 A1, published July 30, 2015 | 1012 |
| Kateraas | US 2012/0221254 A1, published Aug. 30, 2012 | 1014 |
| Jabori | WO 2015/116111 A1, published Aug. 6, 2015 | 1017 |
| Fraser | US 2015/0355604 A1, published Dec. 10, 2015 | 1041 |

Petitioner also relies on the declarations of R. James Duckworth, Ph.D. (Exs. 1003, 1060) in support of its arguments, and Patent Owner relies on the declaration of Brian Anthony, Ph.D. (Ex. 2019) in support of its arguments. The parties also rely on other exhibits as discussed below.

*F. Asserted Grounds of Unpatentability*

Petitioner asserts that the challenged claims are unpatentable on the following grounds:

| Claim(s) Challenged | 35 U.S.C. §[4] | Reference(s)/Basis |
|---|---|---|
| 9–11, 15, 19, 20 | 103 | Kotanagi, Honda |
| 16 | 103 | Kotanagi, Honda, Park |
| 1–7, 14 | 103 | Kotanagi, Honda, Kateraas |
| 12, 13, 17, 18 | 103 | Kotanagi, Honda, Jabori, Park |
| 3, 14 | 103 | Kotanagi, Honda, Kateraas, Fraser |
| 8 | 103 | Kotanagi, Honda, Jabori, Kateraas, Park |

## II. ANALYSIS

### *A. Principles of Law*

Petitioner bears the burden of persuasion to prove unpatentability of the claims challenged in the Petition, and that burden never shifts to Patent Owner. *Dynamic Drinkware, LLC v. Nat'l Graphics, Inc.*, 800 F.3d 1375, 1378 (Fed. Cir. 2015). To prevail, Petitioner must establish by a preponderance of the evidence that the challenged claims are unpatentable. 35 U.S.C. § 316(e); 37 C.F.R. § 42.1(d).

A patent claim is unpatentable under 35 U.S.C. § 103 "if the differences between the claimed invention and the prior art are such that the claimed invention as a whole would have been obvious before the effective filing date of the claimed invention to a person having ordinary skill in the art to which the claimed invention pertains." 35 U.S.C. 103; *KSR Int'l Co. v. Teleflex Inc.*, 550 U.S. 398, 406 (2007). The question of obviousness is

[4] The Leahy-Smith America Invents Act ("AIA") includes revisions to 35 U.S.C. §§ 102 and 103 that became effective on March 16, 2013. Because the earliest filed application identified in the '783 patent has a filing date of September 2, 2014 (Ex. 1001, codes (60), (63), 1:3–14), we apply the AIA-version of 35 U.S.C. § 103.

resolved on the basis of underlying factual determinations including: (1) the scope and content of the prior art; (2) any differences between the claimed subject matter and the prior art; (3) the level of skill in the art; and (4) if present, any objective evidence of obviousness or non-obviousness.[5] *Graham v. John Deere Co.*, 383 U.S. 1, 17–18 (1966).

*B. The Level of Ordinary Skill in the Art*

In determining the level of ordinary skill in the art, various factors may be considered, including the "type of problems encountered in the art; prior art solutions to those problems; rapidity with which innovations are made; sophistication of the technology; and educational level of active workers in the field." *In re GPAC Inc.*, 57 F.3d 1573, 1579 (Fed. Cir. 1995) (quoting *Custom Accessories, Inc. v. Jeffrey–Allan Indus., Inc.*, 807 F.2d 955, 962 (Fed. Cir. 1986)).

Petitioner contends that:

> A POSITA [(person of ordinary skill in the art)] of the '783 patent would have had at least a bachelor's degree in a discipline related to electrical engineering, mechanical engineering, physics, industrial design, or equivalent, and at least three years of experience working with or developing electronic medical or consumer devices.

Pet. 12 (citing Ex. 1003 ¶¶ 39–42).

Patent Owner contends that:

> a person of ordinary skill in the art . . . would have had at least a bachelor's degree in electrical engineering, mechanical engineering, biomedical engineering, computer engineering, physics, or a related field, and would have had at least two years of relevant work experience with capture and processing

[5] The parties have not directed our attention to any objective evidence of obviousness or non-obviousness.

> of data or information, including but not limited to physiological information, or equivalents thereof. EX-2019, ¶¶39-41. Less work experience may be compensated by a higher level of education and vice versa. *Id.*

PO Resp. 15–16.

We discern no material difference between the parties' definitions. *Cf.* PO Resp. 16 (Patent Owner stating that "[t]he analysis presented [in the Response] remains unchanged even if [Petitioner's proposed] skill level is applied."). Petitioner's definition is consistent with the level of ordinary skill reflected in the prior art references of record. *See Okajima v. Bourdeau*, 261 F.3d 1350, 1355 (Fed. Cir. 2001) (recognizing that the prior art itself may reflect an appropriate level of skill in the art). For purposes of this decision, we apply Petitioner's definition of the person of ordinary skill in the art. We note, however, that were we to adopt Patent Owner's assessment, the outcome of this Decision would be the same.

### *C. Claim Construction*

We apply the same claim construction standard used in district court actions under 35 U.S.C. § 282(b), namely that articulated in *Phillips v. AWH Corp.*, 415 F.3d 1303 (Fed. Cir. 2005) (en banc). *See* 37 C.F.R. § 42.100(b). In applying that standard, claim terms generally are given their ordinary and customary meaning as would have been understood by a person of ordinary skill in the art at the time of the invention and in the context of the entire patent disclosure. *Phillips*, 415 F.3d at 1312–13. "In determining the meaning of the disputed claim limitation, we look principally to the intrinsic evidence of record, examining the claim language itself, the written description, and the prosecution history, if in evidence." *DePuy Spine, Inc. v. Medtronic Sofamor Danek, Inc.*, 469 F.3d 1005, 1014 (Fed. Cir. 2006)

(citing *Phillips*, 415 F.3d at 1312–17). "[W]hile extrinsic evidence can shed useful light on the relevant art, . . . it is less significant than the intrinsic record in determining the legally operative meaning of claim language." *Phillips*, 415 F.3d at 1317 (internal quotation marks omitted).

We discuss here two claim construction issues. On this record and for purposes of this decision, we determine that no other claim terms require express construction.

*1. Biosensor Module*

Several challenged claims recite a "biosensor module." For the most part, there is no dispute as to the meaning of that term in comparing the prior art to the claims. However, a dispute does arise with regard to dependent claim 11. Claim 11, as discussed further below in the context of Petitioner's Ground 1, calls for the charging coil to have a diameter less than that of the biosensor module. Ex. 1001, 59:12–13. The disputed issue is whether, in claim 11, the cover (that passes the wireless and optical signals) is part of the biosensor module.

The parties agree that the "biosensor module," within the meaning of the claimed invention, is the portion of the electronic device/watch that includes physiological sensor components such as a light source and a light detector. *See* Pet. 14; PO Resp. 17 (asserting that the Specification indicates that the term, standing alone, also can encompass non-optical sensor components such as electrodes).

As Petitioner notes, Pet. 14, the Specification of the '783 patent states that "*[i]n some embodiments*, the biosensor module 710 includes the rear cover 608." Ex. 1001, 28:9–10 (emphasis added). As Petitioner also notes, Pet. 14, the Specification additionally states that "*in some embodiments*, the biosensors are disposed relative to or attached to a rear cover 608."

Ex. 1001, 40:46–48) (emphasis added). Petitioner, in the claim construction section of the Petition, proposes a construction of "biosensor module" as "a portion of the device that includes one or more sensors and *optionally includes a cover*." Pet. 14 (citing Ex. 1003 ¶¶ 50–53) (emphasis added). However, in comparing dependent claim 11 to the relied-on prior art, Petitioner omits the aspect of the cover being optional, asserting that, "in the '783 patent[,] the 'biosensor module' includes both biosensors and a cover glass." *Id.* at 36–37 (contending that "Kotanagi's cover glass, LED 5, and PD [(Photodetector)] 6 teach the claimed biosensor module").

Patent Owner argues that "the express language of the claims precludes a cover from being part of the claim biosensor module." PO Resp. 17. Specifically, Patent Owner argues that "the express language of claim 9 [from which claim 11 depends] confirms that the claimed 'cover' is different and separate from the claimed 'biosensor module.'" *Id.* at 57.

Independent apparatus claim 9 recites several structures including "a biosensor module aligned with the opening" and "a cover disposed over the biosensor module," with the cover "configured to pass optical signals to and from the biosensor module." Ex. 1001, 58:65–59:5. Patent Owner argues, that, "[p]er the claim then, the 'cover' cannot be 'disposed over the biosensor module' if that 'cover' is itself part of the biosensor module," and, "[t]herefore, the plain language of this limitation demands that the claimed 'biosensor module' and 'cover' be physically separate and distinct elements, with the latter being 'disposed over' the former." PO Resp. 58 (citing, *inter alia*, *Becton, Dickinson & Co. v. Tyco Healthcare Grp., LP*, 616 F.3d 1249, 1254 (Fed. Cir. 2010) ("Where a claim lists elements separately, 'the clear

implication of the claim language' is that those elements are 'distinct component[s]' of the patented invention." (alteration in original))).

We find Patent Owner's position to be persuasive. Not only are the cover and biosensor module recited separately in the list of components of the device of claim 9, we also agree that the "disposed over" claim language establishes the configuration of two separate components relative to each other. Additionally, the claim language that requires the cover to be "configured to pass optical signals to and from the biosensor module" supports an interpretation where the cover is separate from the biosensor module, otherwise it seemingly would be passing signals to and from itself. The understanding that the cover is separate from the biosensor module in claim 9 is consistent with the Specification's description of an embodiment that tracks the language of claim 9 and speaks of the two elements as separate, individual components, namely the statement that "[a] biosensor module may be disposed within the opening of the housing" and "[a] rear cover may be disposed over the biosensor module." Ex. 1001, 2:59–62; *see also id.* at 2:56 (the same paragraph beginning with "Some embodiments . . .").

Petitioner asserts that its proposed construction is consistent with the claim language, arguing that "the word 'cover' naturally suggests that its role is to be 'disposed over,'" and that "[a] cover can be part of a module just as a clear plastic lid can be both disposed over, and part of, a container, allowing a view of its contents." Pet. Reply 4. We disagree with Petitioner's analogy. Although a clear lid may be over a *jar*, it cannot be said to be "disposed over" the container consisting of both the jar and the lid because it then would be disposed over itself.

Petitioner, in the Reply, points to certain statements in the Specification and figures purportedly describing and depicting embodiments where the biosensor module includes the cover. Pet. Reply 3–4 (citing Ex. 1001, 2:50–51, 29:9–10, Figs. 7, 16); *see* Ex. 1001, 2:50–54 (the Specification, using the permissive term "may," stating that "[t]he biosensor module *may* also include an optically transparent rear cover." (emphasis added). However, Petitioner does not identify any disclosure in the Specification (or other intrinsic evidence) that requires the cover, in every embodiment of the invention, to be part of the biosensor module. Rather, Petitioner, at most, shows that the Specification indicates that the biosensor module, in some embodiments, may include the cover. *See, e.g.*, *id.* 5 (Petitioner asserting: "Here, the specification explains the biosensor module can include a cover."). Claims 9 and 11 reasonably are regarded as being directed to embodiments contemplated by the '783 patent in which the biosensor module does not include the cover.

We determine that, in independent claim 9 and, by extension, its dependent claim 11, the "biosensor module" and "cover" are two separate components.

*2. Magnetically Couple*

Claim 16 depends directly from independent claim 15 and recites: "the wireless charging receive coil is configured to receive power from an external inductive power transmitter dock; and the electronic watch is configured to magnetically couple with the external inductive power transmitter dock." Ex. 1001, 60:8–13. Pertinent to the parties' dispute is the recitation of the magnetic coupling between the watch and the charging dock.

The parties agree that inductive charging of a device by a dock necessarily involves magnetically coupling the two components' coils together. *See* Pet. 54 (citing Ex. 1006, 6:38–39); PO Resp. 61–62 (citing Ex. 2019 ¶¶ 191–192).

As discussed below, Petitioner offers alternative contentions as to how the relied-on prior art teaches magnetic coupling. *See* Pet. 54–55. The first alternative is where the magnetically coupling limitation is satisfied by the inductive charging. *See id.* The second alternative is "if 'configured to magnetically couple' is construed to require, in addition to the magnetic coupling of induction, magnetic coupling for alignment." Pet. 55.

Patent Owner argues that "claims 15 and 16 taken together recite wireless charging/power signals received by the wireless charging receive coil and from an external inductive power transmitter dock, inherent in these recited features is electromagnetic coupling." PO Resp. 61–62 (citing Ex. 2019 ¶¶ 191–192); *but see* Pet. Reply 29 ("However, Claim 15 does not recite any magnetic coupling with a dock. Claim 16 adds the external dock."). According to Patent Owner, "when claim 16 ***additionally*** recites that the 'watch is configured to ***magnetically couple*** with the . . . dock,' this feature would necessitate a separate or additional magnetic coupling." PO Resp. 62 (citing Ex. 2019 ¶ 193). Patent Owner asserts that this position is consistent with Specification of the '783 patent because it "explains use of magnets in the watch device to facilitate such additional magnetic coupling and alignment of the watch device with the underlying dock." *Id.* (citing Ex. 1001, 5:37–40, 43:36–41, 45:29–51). Petitioner, for its second alternative, agrees that the same cited portions of the Specification, along with Figure 19, "refer[] to magnetic alignment." Pet. 55.

We agree that a person of ordinary skill in the art, reading dependent claim 16 in light of the Specification, would understand the claim to require the device to be "configured to" have something more than merely coupling due to the inductive charging.

Dependent claim 16 contains two phrases. The first calls for "the wireless charging receive coil [to be] configured to receive power from an external inductive power transmitter dock." Ex. 1001, 60:9–11. A person of ordinary skill in the art would recognize that this is calling for an inductive charging configuration and therefore magnetic coupling via that charging. *See, e.g.*, Ex. 2019 ¶ 192. The second phrase then calls for the watch to be "configured to magnetically couple" with the dock. Ex. 1001, 60:12–13. A person of ordinary skill in the art would understand that this second phrase requires something in addition to the inductive charging configuration of the first phrase, otherwise the second phrase would be unnecessary. This understanding is particularly so because the ordinary artisan would be reading the claim in light of the Specification, which describes the use of something more for the coupling.

The Specification states, for example, that "[t]he device may also include a first alignment magnet positioned within the receive coil and configured to align the device with respect to a second alignment magnet positioned within the external transmit coil." Ex. 1001, 5:37–40. And, the Specification explains that "[a]lignment assistance can also be provided with one or more magnetic field sources[, for example, permanent magnets]." *Id.* at 43:36–41. Figure 19 depicts magnets in addition to the charging coils. *See id.* at 45:29–51 (describing the figure).

We determine that claim 16 requires a configuration for magnetic coupling in addition to that of the charging coils. We do not reach the issue of whether that additional configuration also requires it to be for the purpose of alignment.

### *D. The Alleged Obviousness of Claims 9–11, 15, 19, and 20 Over Kotanagi and Honda (Ground 1)*

Petitioner alleges that claims 9–11, 15, 19, and 20 of the '783 patent would have been obvious over Kotanagi and Honda. *See* Pet. 21–32 (addressing independent claim 9). Of those challenged claims, claims 9 and 15 are independent. Petitioner contends, *inter alia*, that Kotanagi discloses much of the subject of independent claim 9, and that Honda discloses wireless charging teachings and structure, including the alignment of the charging coil with an opening in the rear of the housing. *See id.*

Patent Owner argues, *inter alia*, that a person of ordinary skill in the art would not implement the proposed combination because, due to size restrictions of Kotanagi, the size and positioning of charging coil in the proposed combination would result in slow and inefficient charging. *See, e.g.*, PO Response 30–31. Patent Owner also argues that an ordinary artisan would not choose the proposed combination because there were more desirable known alternatives. *See id.* at 31.

#### *1. Kotanagi (Ex. 1005)*

Kotanagi discloses a biological information measuring device in the form of "a wristwatch-type device which detects pulse rate as a type of biological information while mounted to the wrist." Ex. 1005 ¶ 44. "[B]iological sensor part 8 . . . includes an LED (Light Emitting Diode) (light-emitting part) 5 for emitting light toward the living body while in contact with the living body surface" and "a PD (Photodetector) (light-

receiving part) 6 for receiving reflected light from the living body out of the light emitted by the LED 5 and generating a pulse signal (biological information signal) corresponding to the amount of received light." *Id.* ¶ 46.

Kotanagi's Figure 7 is reproduced below.

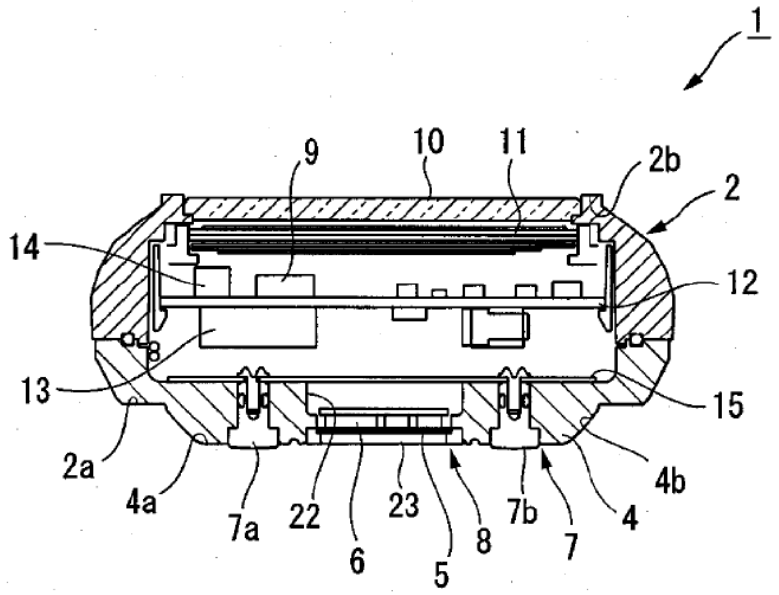


Figure 7 is FIG. 7 is a cross-sectional view of a biological information measuring device." *Id.* ¶ 41.

> [A] through-hole 22 passing through the outside and the inside of the housing 2 is formed in the center of the lower surface 4a of the protruding part 4, and a cover glass 23 is fixed to the housing 2 so as to block the through-hole 22. The LED 5 and the PD [photodetector] 6 are disposed adjacent to one another in a direction orthogonal to the longitudinal direction of the housing so as to touch the inside of the glass cover 23. That is, the LED 5 and the PD 6 are configured so as to be dropped into the protruding part 4. As a result, the LED 5 and the PD 6 are as close to the living body surface B as possible.

*Id.* ¶ 55. "The pair of electrodes 7a and 7b have a function of detecting whether there is contact with the living body surface B based on the potential difference between the electrodes." *Id.* ¶ 59.

Kotanagi discloses that a connection terminal for recharging the battery by an external device is located on the side surface of the housing. *Id.* ¶ 53. "In addition, rather than the external connection terminal 21, a transformer or the like for supplying power to a recharger and to the inside of the housing 2 may be provided so as to recharge the rechargeable battery 13 in a contactless state." *Id.*

*2. Honda (Ex. 1006)*

Honda "relates to an electronic apparatus in which one of two devices charges the other in a non-contact fashion." Ex. 1006, 1:4–6. Honda, in describing Figure 1, discloses that "the electronic watch 200 detects biological information including the pulse rate or the heart rate of the body through an unshown sensor and stores it." *Id.* at 6:17–20.

Honda's Figure 2 is reproduced below.

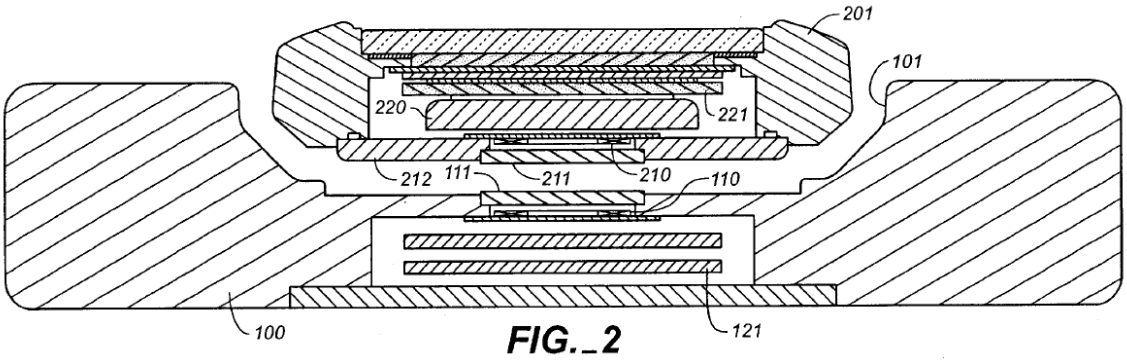

FIG._2

Figure 2 is a sectional view showing the construction of a station and an electronic watch. *Id.* at 5:20–21. "As shown, a watch-side coil 210 for the data transmission and the battery charging is arranged in a case back 212 of the watch body 201 and is covered with a cover glass 211." *Id.* at 6:22–25. "The watch body 201 includes a circuit board 221, connected to a secondary battery 220 and a watch-side coil 210." *Id.* at 6:25–27. "A station-side coil 110 is arranged in the portion of the socket 101 of the station 100,

facing the watch-side coil 210, and is covered with a cover glass 111." *Id.* at 6:28–30.

Honda discloses measured data that compares device housing materials and transmission efficiencies. *Id.* at 13:33–34, Fig. 15. Honda states that "the use of an insulating material [such as glass] for the external housing results in a transmission efficiency ten times as high as the one achieved by a stainless [steel] product." *Id.* at 13:45–48, Fig. 15 (depicting transmission efficiency for stainless steel and glass materials); *see also id.* at 2:44–50 (explaining that eddy currents that take place in the electrically conductive stainless steel material of a device weakens the electromagnetic coupling).

*3. Independent Claim 9*

*a. [9a] A wearable electronic device, comprising:*
*a housing comprising a bottom portion defining an opening;*
*[9b] a biosensor module aligned with the opening;*

Petitioner contends that Kotanagi teaches a wearable electronic device, specifically a biological information measuring device, having a housing with an opening in the bottom. *See* Pet. 21–22 (citing Ex. 1003 ¶ 116; Ex. 1005 ¶¶ 45, 55, Figs. 5, 7). Petitioner also contends that "Kotanagi teaches a 'biological sensor part' aligned with the opening," and that the Kotanagi's biological sensor part is a "a biosensor module" within the meaning of the '783 patent. *See* Pet. 22 (citing Ex. 1003 ¶ 117; Ex. 1005 ¶ 55, Figs. 5, 7); *see also id.* at 14 (Petitioner's proposed construction for "biosensor module"). Petitioner provides an annotated version of Kotanagi's Figure 5, which is reproduced below.

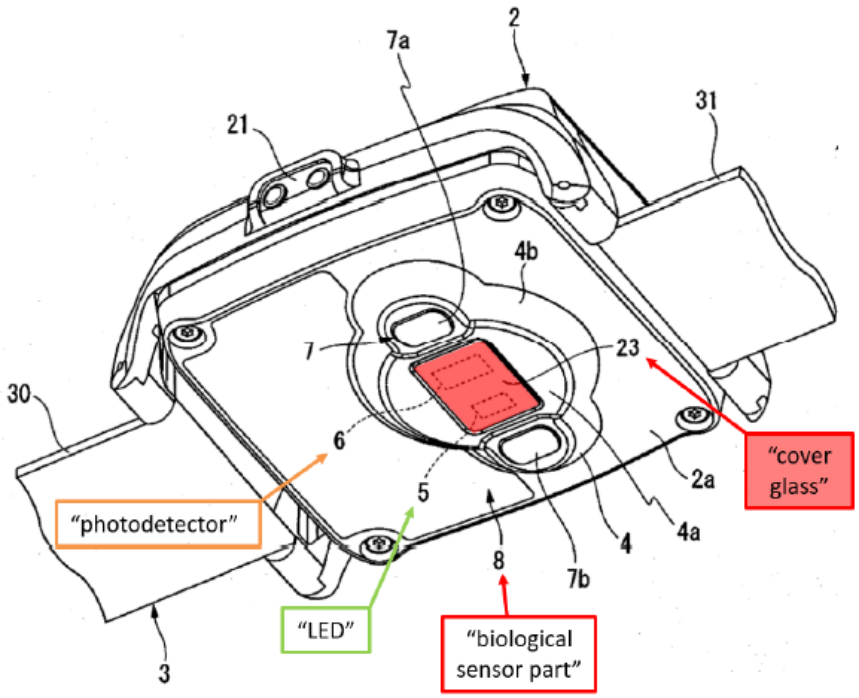


Pet. 22. Above, is Petitioner's annotated version of Kotanagi's Figure 5, which is a perspective view of a biological information measuring device. Ex. 1005 ¶ 41. Shown are Petitioner's annotations for biological sensor part 8, which includes LED (Light Emitting Diode) 5 and PD (photodetector) 6, and cover glass 23 (shaded red). *See id.* ¶¶ 46, 55.

Petitioner also provides an annotated version of Kotanagi's Figure 7, which is reproduced below.

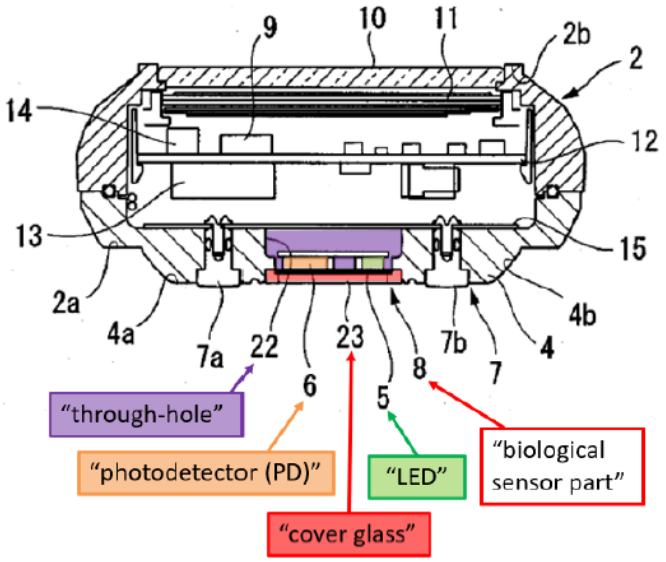


Pet. 22. Above, is Petitioner's annotated version of Kotanagi's Figure 7, which is a cross-sectional view of a biological information measuring device. Ex. 1005 ¶ 41. Shown are Petitioner's annotations for biological sensor part 8, LED 5 (green), photodetector 6 (orange), cover glass 23 (red), and through-hole 22 (purple). *See id.* ¶¶ 46, 55.

Patent Owner does not raise any arguments regarding these contentions. *See* PO Resp. 27–56; *cf.* Paper 13, 4 (Patent Owner's pre-institution sur-reply asserting: "Petitioner concedes that, like Kotanagi, Yuen—a reference that was applied in a rejection—discloses a wrist-worn device with rear biosensors that facilitate transmission of optical signals via device's rear cover/opening.").

b. *[9c] a wireless charging receive coil positioned within the housing and aligned with the opening;*

*[9e] a cover disposed over the biosensor module; wherein:*

*the cover is configured to pass optical signals to and from the biosensor module; and*

*[9f] the cover is configured to pass wireless power to the wireless charging receive coil.*

Petitioner contends that the proposed combination of Kotanagi and Honda teaches the recited position and alignment of a wireless charging receive coil relative to the opening in the device housing. Pet. 22–25. Relatedly, Petitioner contends that the proposed combination will result in the recited cover configured to pass optical signals and wireless power. *Id.* at 26–31.

Petitioner first contends that Kotanagi discloses the use of a wireless charging receive coil. Specifically, Petitioner notes that "Kotanagi teaches that 'a transformer or the like for supplying power to a recharger and to the inside of the housing 2 may be provided so as to recharge the rechargeable battery 13 in a contactless state.'" *Id.* at 22 (quoting Ex. 1005 ¶ 53). Petitioner contends that a person of ordinary skill in the art would have known "that transformers use coils and that contactless charging uses a wireless charging receive coil." *Id.* at 22–23 (citing Ex. 1003 ¶ 118).

For the recited coil position and alignment with the housing opening, Petitioner turns to Honda. Petitioner contends that Honda is like Kotanagi in that Honda discloses a contactless charging system for an electronic watch with a biosensor, and that Honda discloses a contactless charging system for that watch. *Id.* at 23–24 (citing Ex. 1006, 6:17–19, Figs. 1, 2). Petitioner asserts that, "[l]ike Kotanagi, the Honda watch has a cover glass that spans an opening in the bottom surface of the watch." *Id.* at 24. Petitioner further

asserts that, "[w]ithin its housing and behind its cover glass, Honda illustrates a 'wireless charging receive coil' 'aligned with the opening,' as claimed." *Id.* (citing Ex. 1006, Fig. 2).

One of Petitioner's annotated versions of Honda's Figure 2 is reproduced below.

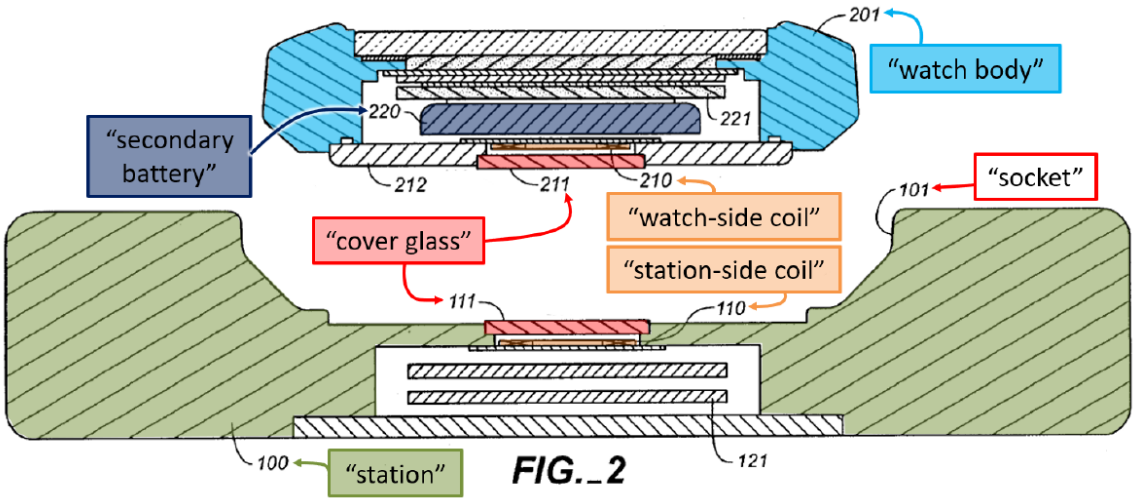


*Id.* at 30. Above, is Petitioner's annotated version of Honda's Figure 2, which is a sectional view showing the construction of a station and an electronic watch. Ex. 1006, 5:20–21. Shown is watch-side coil 210 (orange) arranged in case back 212 of watch body 201 (light blue) and covered with cover glass 211 (red). *Id.* at 6:22–25. Secondary battery 220 (dark blue) is inside watch body 201. *See id.* at 6:25–27. Also shown is station-side coil 110 (orange) arranged in the portion of socket 101 of station 100 (green), facing watch-side coil 210 (orange), and covered with cover glass 111 (red). *Id.* at 6:28–30.

Petitioner's proposed combination modifies Kotanagi to have a charging receive coil in the housing and aligned behind the cover glass. *See* Pet. 30. Petitioner contends that:

> A person of ordinary skill in the relevant field or "art" at the time of the '783 patent (a "POSITA") would have been motivated to combine Honda and Kotanagi (e.g., to apply Honda's wireless charging teachings and structure to the Kotanagi device) based at least on Kotanagi's own statement that its rechargeable battery can be recharged "in a contactless state." EX1005 ¶(0053). A POSITA seeking to charge this way would have looked to Honda—assigned to another subsidiary of the same Seiko parent company and providing compatible disclosure—to implement Kotanagi's stated goal. Honda's watch structure is similar in size and purpose to the watch of Kotanagi and Honda teaches incorporating a sensor for "pulse rate" or "heart rate". EX1006 6:17–19. Thus, a POSITA would have had a reasonable expectation of success in fitting Honda's wireless charging receive coil within Kotanagi's housing (e.g., in its "through-hole 22") for Kotanagi's expressed purpose of contactless recharging. EX1003 ¶121.

Pet. 24–25; *see also id.* at 31 (contending that, because the two references teach biosensor watches with wireless charging, each reference would have motivated a POSITA to look to the other).

Petitioner contends that Kotanagi's cover glass 23, with the photodetector 6 and LED 5 behind it, is the recited cover disposed over the biosensor module as well as the recited cover configured to pass optical signals to and from the biosensor module. Pet. 26–27; *id.* at 27 ("A POSITA would have understood from this context that because Kotanagi's 'cover glass 23 is fixed to the housing 2 so as to block the through-hole 22' (EX1005 ¶(0055)), its LED and photodetector work by passing optical signals *through* the cover glass.").

As for the limitation calling for the cover to be configured to pass wireless power to the receive coil, Petitioner contends that Honda's charging station "passes wireless power to the receive coil through a rear cover glass (similar to that of Kotanagi), using the physics of induced currents and

magnetic flux," and that Honda teaches that the charging and receiving coils must be aligned and at an acceptable distance from each other. *Id.* at 28–30 (citing Ex. 1006, 6:28–40, Figs. 2, 10).

Petitioner, as to the proposed modification, additionally contends:

> Kotanagi's cover glass is already centrally located at the base of the device consistent with Honda's wireless charging design. A POSITA would have known to modify Kotanagi's device based on Honda's teachings to align a charging receive coil behind this cover glass (in a similar position and with a similar size to that taught in Honda). With this straightforward modification (motivated, for example, by Kotanagi's own reference to "contactless" charging and Honda's teaching of how to do so in a watch-style device), the cover would be "configured to pass wireless power" in the claimed manner.

*Id.* at 30 (citing Ex. 1003 ¶¶ 127–129). Petitioner also asserts that Honda teaches that metal covers are inferior for power transmission due to eddy currents and, therefore, a person of ordinary skill in the art would have aligned the receive coil with Kotanagi's opening such that power could pass through the glass cover. *See id.* at 32 (citing Ex. 1003 ¶ 132; Ex. 1006, 2:48–50, Fig. 15).

Petitioner asserts that, "[g]iven Honda's teaching of a wireless receive coil near a rear opening similar to that taught in Kotanagi (where both Honda's and Kotanagi's openings have a cover glass), a POSITA would have noticed the available space near Kotanagi's opening and been motivated to use that space for such a coil, with a reasonable expectation of success." *Id.* at 31–32 (citing Ex. 1003 ¶ 131; Ex. 1005, Fig. 7). In that regard, Petitioner provides an annotated version of Kotanagi's Figure 7, which is reproduced below.

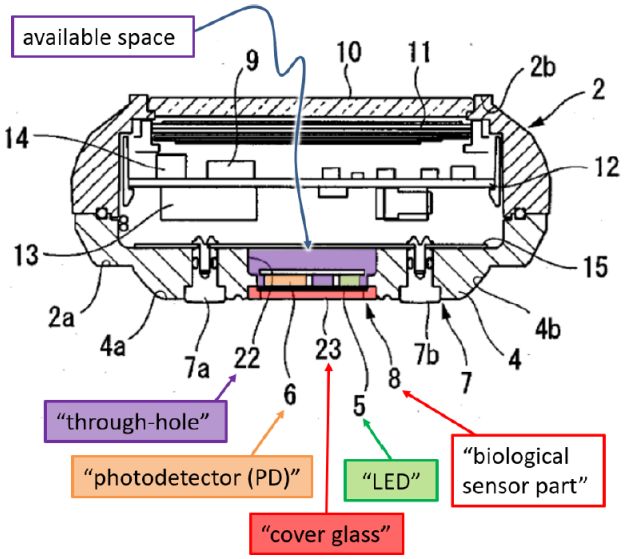


Pet. 32. Above, is Petitioner's annotated version of Kotanagi's Figure 7 (a cross-sectional view of a biological information measuring device), labeling "available space" (purple) in through-hole 22 and around LED 5 (green) and photodetector 6 (orange), and above cover glass 23 (red). *See* Ex. 1005 ¶¶ 41, 55. Further, Dr. Duckworth testified that Honda teaches that metal covers are inferior for power transmission and, therefore, "[a] POSITA would thus have aligned Honda's coil with Kotanagi's opening such that power could pass through the [glass] cover." Ex. 1003 ¶ 132 (citing Ex. 1006, 2:48–50, Fig. 15). Dr. Duckworth also testified that a person of ordinary skill in the art would have had a reasonable expectation of success in making the proposed combination. *Id.* ¶ 133.

Petitioner, noting that Kotanagi teaches placing the biological sensor part against the glass cover, further contends that:

> [A] POSITA would have used Honda's teachings to either: 1) modify Kotanagi to position a wireless charging coil behind Kotanagi's cover glass, LED, and PD; or 2) enlarge Kotanagi's

> opening and cover glass to make room for a coil behind the cover glass, surrounding the LED and PD.

Pet. 39[6] (citing Ex. 1005 ¶ 55).

Patent Owner argues that the proposed combination would not have been obvious and that a person of ordinary skill in the art would not have had a reasonable expectation of success in combining the teachings of the references because Kotanagi imposes size restrictions that would result in a coil sized and positioned such that the charging would not be quick and efficient. *See* PO Resp. 30–31. Patent Owner further argues that a person of ordinary skill in the art would not have configured the device as proposed by Petitioner but, rather, would have chosen an existing alternative configuration, namely one that does not meet the claim limitations. *See id.*

To appropriately evaluate Patent Owner's argument, we must place it in the proper context. Independent claim 9, in pertinent part, calls for a device having both a biosensor and a wireless charging coil, with both of those aligned with an opening in the device and with that opening having a cover configured to pass both biosensor optical signals and wireless power. *See* Ex. 1001, 58:65–59:7. It is undisputed that Kotanagi discloses an

---

[6] We acknowledge that this block-quoted contention was made in the context of claim 11, which depends directly from independent claim 9. Although Patent Owner characterizes this as a new theory, it was made in the Petition and Patent Owner availed itself of the opportunity to address it during the trial. *See, e.g.*, PO Sur-reply 5, 11–12; Tr. 57:17–22, 60:7–62:2; *cf.* Ex. 2020, 46:21–47:10 (Patent Owner eliciting, during cross-examination prior to filing the Response, Dr. Duckworth's testimony that: "All I am saying is in Paragraph 149, a POSITA would view Honda's teachings to either modify Kotanagi to position wireless charging coil behind Kotanagi's cover glass or enlarge the Kotanagi's opening and cover glass to make room for a coil behind the cover glass.").

electronic wristwatch-type device having a biosensor aligned with an opening having a cover that can pass optical signals. *See* PO Resp. 18–19, 21. Although Kotanagi depicts an embodiment that utilizes wired charging (via a connection on the side of the device), Kotanagi teaches that wireless (or "contactless") charging also may be utilized. Ex. 1005 ¶ 53 ("[R]ather than the external connection terminal 21, a transformer or the like for supplying power to a recharger and to the inside of the housing 2 may be provided so as to recharge the rechargeable battery 13 in a contactless state."). Kotanagi, however, does not describe the details of such wireless charging. It is undisputed that, as of the pertinent timeframe, wireless charging of, for example, wrist-worn devices having biometric sensing, was well-known. *See, e.g.*, PO Resp. 31 (Patent Owner admitting that "the POSITA would have been aware of other well-known and actually functioning configurations of biometric sensing and wireless charging devices."). We find, and it appears to be undisputed, that the level of skill specifically as to wireless charging was high as of that point in time. *See, e.g.*, Ex. 1006, 6:28–58 (Honda discussing coil testing and comparisons); PO Resp. 54–55 (Patent Owner asserting that a person of ordinary skill in the art would have modeled and compared coil configurations). Honda discloses an example of an electronic watch that has both biosensors (unshown pulse rate or the heart rate sensors) and wireless charging, and discloses certain wireless charging details that were not included in Kotangi's disclosure. *See, e.g.*, Ex. 1006, 6:12–49. Importantly, Honda teaches aligning the wireless charging coil with an opening and corresponding glass cover, and teaches the benefit of charging through, e.g., a glass cover rather than metal. *See* Ex. 1006, 6:22–25, 13:33–52, Fig. 2 (depicting watch-side coil 210

behind cover glass 211); Fig. 15 (chart comparing transmission efficiency for certain materials). Dr. Duckworth persuasively opines that "Honda's Figure 15 and related text teach metal covers are inferior for power transmission due to, e.g., eddy currents," and "[a] POSITA would thus have aligned Honda's coil with Kotanagi's opening such that power could pass through the cover." Ex. 1003 ¶ 132 (citing Ex. 1006, 2:48–50, Fig. 15 (page 14 of the exhibit)); *see also* Ex. 2019 ¶¶ 131–132 (Dr. Anthony similarly testifying that "Honda teaches that presence of metal materials between the transmitting and receiving coils, gives rise to eddy currents, which reduce charging efficiency. . . . This is also why Honda provides glass for its rear cover.").

Patent Owner argues that the proposed combination will result in a configuration "that is contrary to Honda's teachings and its stated goals and purpose of achieving quick and efficient wireless charging." PO Resp. 30–31. Patent Owner's focus on these properties is misplaced. We agree with Petitioner that characteristics such as charging speed and efficiency are not claimed. *See* Pet. Reply 1 ("[T]he '783 patent does not disclose, let alone claim, sizing or other details [Patent Owner] Apple asserts are necessary for successful wireless charging."); *id.* at 6 ("[C]harging speed [is] not claimed."). Rather, the claim drafter utilized broad language to encompass a biosensor device having the capability to wireless charge through a cover—both good configurations and those that Patent Owner argues are inferior. And, even if the proposed combination does not yield a commercially viable product, as Patent Owner implies, the broad claim scope would hinder an innovating competitor's ability to utilize and test that purported less desirable combination on the way to development of a better device.

Patent Owner argues that a person of ordinary skill in the art would not have been motivated to make the proposed combination and would not have had a reasonable expectation of success in making that combination. *See, e.g.*, PO Resp. 31. These arguments are not persuasive at least because Patent Owner's motivation requirement and implied definition of success are not sufficiently tied to the claimed invention. *See, e.g.*, *Elekta Ltd. v. ZAP Surgical Sys., Inc.*, 81 F.4th 1368, 1375 (Fed. Cir. 2023) ("Reasonable expectation of success refers to the likelihood of success in combining references to meet the limitations of the claimed invention."). Patent Owner would require a successful outcome to be "quick and efficient wireless charging." *See* PO Resp. 31. In making these arguments, Patent Owner is improperly superimposing the purported goals and purpose of Honda, the secondary reference, onto the ordinary artisan. *See, e.g.*, *id.* at 37–41. However, the intended purpose of a prior art reference does not control the obviousness inquiry. *Intel Corp. v. Qualcomm Inc.*, 21 F.4th 784, 800 (Fed. Cir. 2021). Our reviewing court recently explained:

> The [motivation-to-combine] inquiry is not whether a relevant artisan would combine a first reference's feature with a second reference's feature to meet requirements of the first reference that are not requirements of the claims at issue. A contrary view would run counter to established principles, including that the claim defines the invention whose obviousness is being assessed and that a skilled artisan may be motivated to combine particular features of different references, *e.g.*, to secure some benefits at the expense of others, even when bodily incorporation would be impossible or inadvisable.

*Axonics, Inc. v. Medtronic, Inc.*, 73 F.4th 950, 957 (Fed. Cir. 2023). Petitioner's combination yields the benefit of the addition of wireless charging capability to a biosensor device. A person of ordinary skill in the art would find that benefit to be a motivating reason to make the

combination. *See, e.g.*, Ex. 1003 ¶ 121 (Dr. Duckworth's motivation opinion based, in part, on "Kotanagi's own statement that its rechargeable battery can be recharged 'in a contactless state.'"); *id.* ¶ 127 (Dr. Duckworth's describing a motivating factor in Honda's explanation "that this [charging] station passes wireless power to the wireless charging receiving coil through a rear cover glass (similar to that of Kotanagi), using the physics of induced currents and magnetic flux."); *see also* Ex. 1052, 45:16–46:2 (Dr. Anthony, on cross-examination and after being asked whether wireless charging is an improvement over wired charging for a consumer watch, responding that "in some instances it could be, and in others it may not be."). And, as to a reasonable expectation of success, Patent Owner admits that "Petitioner has presented a device configuration in which a wireless charging coil ***could*** be provided in Kotanagi's through hole 22." PO Resp. 56; *see also id.* at 3 (Patent Owner arguing that "the size of coil that could be provided in this allegedly available space would be small and would significantly limit the amount of wireless power signal transmission," but not arguing that even Patent Owner's purported size-limited configuration would be inoperative); *see, e.g.*, Ex. 1003 ¶¶ 130–133 (Dr. Duckworth credibly testifying that a person of ordinary skill in the art would have had a reasonable expectation of success in combining the teachings of Kotanagi and Honda).

Patent Owner argues that Kotanagi's device has size constraints that would limit the size and positioning of a charging coil, and that the purported combination, as characterized by Patent Owner, would result in a "significantly degrading wireless charging efficiency" of Honda's coil. PO Resp. 38; *see id.* at 32–41. Patent Owner further argues that the combination

would have to be configured a certain way "so as not to frustrate Kotanagi's goal" and that the resulting configuration would "would frustrate Honda's goals and intended purpose." *Id.* at 35, 37; *see also, e.g.*, *id.* at 39–40 (Patent Owner arguing that the combination, as characterized by Patent Owner, would inject noise and interference that are contrary to Honda's goals of quick and efficient power transmission). We do not agree with this line of argument. "The test for obviousness is not whether the features of a secondary reference may be bodily incorporated into the structure of the primary reference; nor is it that the claimed invention must be expressly suggested in any one or all of the references." *In re Keller*, 642 F.2d 413, 425 (CCPA 1981). The person of ordinary skill in the art is not compelled to blindly follow the teaching of one prior art reference over the other without the exercise of independent judgment. *See Lear Siegler, Inc. v. Aeroquip Corp.*, 733 F.2d 881, 889 (Fed. Cir. 1984). As the Supreme Court recognized in *KSR Int'l Co. v. Teleflex Inc.*, "[a] person of ordinary skill is also a person of ordinary creativity, not an automaton." 550 U.S. 398, 421 (2007).

Dr. Duckworth persuasively testifies that, "if, under the relevant engineering trade-offs, a POSITA wanted to increase charging speed, consistent with Honda's teachings, Honda would have provided the motivation and information to either re-size or reshape Kotanagi's protrusion and/or cover glass to provide for a larger coil." Ex. 1060 ¶ 321; *see also* Ex. 1003 ¶ 148 ("In view of the knowledge and teachings above, a POSITA would have been motivated *to configure the coil diamete*r to receive wireless power through an opening in Kotanagi's metal cover to achieve the wireless charging goal expressed in Kotanagi."); Ex. 2020, 47:5–10 ("[A] POSITA

would view Honda's teachings to either modify Kotanagi to position wireless charging coil behind Kotanagi's cover glass or enlarge the Kotanagi's opening and cover glass to make room for a coil behind the cover glass."); PO Resp. 40 (Patent Owner admitting that Honda teaches that metal is inferior for power transmission and "[t]his is precisely why Honda seeks to provide glass for its rear cover."). And, although the references express certain goals, Patent Owner does not adequately identify any disclosure in either reference that disparages Petitioner's articulated combination. *DePuy Spine, Inc. v. Medtronic Sofamor Danek, Inc.*, 567 F.3d 1314, 1327 (Fed. Cir. 2009) ("A reference does not teach away, however, if it merely expresses a general preference for an alternative invention but does not 'criticize, discredit, or otherwise discourage' investigation into the invention claimed.").

Even if, as Patent Owner argues, the proposed combination would not quickly charge the device, this is not dispositive. Dr. Anthony agrees that "[d]evices, depending on their use and their function, can benefit from either fast charge or trickle charge or a little bit of charge." Ex. 1052, 19:3–6. "It's not necessary to show that a combination is 'the *best* option, only that it be a *suitable* option.'" *Intel Corp. v. Qualcomm Inc.*, 21 F.4th 784, 800 (Fed. Cir. 2021) (quoting *PAR Pharm., Inc. v. TWI Pharms., Inc.*, 773 F.3d 1186, 1197–98 (Fed. Cir. 2014)); *see also In re Mouttet*, 686 F.3d 1322, 1334 (Fed. Cir. 2012) ("[J]ust because better alternatives exist in the prior art does not mean that an inferior combination is inapt for obviousness purposes."); *Medichem, S.A. v. Rolabo, S.L.*, 437 F.3d 1157, 1165 (Fed. Cir. 2006) ("[A] given course of action often has simultaneous advantages and disadvantages, and this does not necessarily obviate motivation to

combine."). Based upon the final record before us, we find that a person of ordinary skill in the art would consider even a slow charging configuration to be a suitable option.

Relatedly, Patent Owner argues that another prior art reference, Fraser, discloses a biosensor watch "that implements a larger wireless charging receive coil covering a substantial portion of the rear watch surface and in doing so, counteracts the signal degradations that come from interposing materials and/or spacing between the wireless charging receive and transmit coils (as Petitioner's proposed configuration demands)." PO Resp. 42 (citing Ex. 2019 ¶ 137). Patent Owner then proposes and analyzes its own combination where Kotanagi is modified by Fraser. *See id.* at 42–56. Patent Owner argues that a person of ordinary skill in the art would have compared Petitioner's proposed combination (as characterized by Patent Owner as being severely space-constrained) against Patent Owner's proposed Kotanagi-Fraser combination. *See, e.g.*, *id.* at 54–55 ("[W]hen modeling such a coil relative to a Fraser-like larger coil, a POSITA would have observed . . . ."). Based on this comparison, Patent Owner argues that a person of ordinary skill in the art, being aware of such alternatives, "would simply not contemplate or concoct Petitioner's proposed configuration." *Id.* at 42 (citing Ex. 2019 ¶ 136).

This argument is not persuasive because the existence of alternatives, even if better than Petitioner's proposed combination, does not obviate the motivation to make the combination. *See, e.g.*, *In re Mouttet*, 686 F.3d at 1334 ("[T]he mere disclosure of alternative designs does not teach away," and "just because better alternatives exist in the prior art does not mean that an inferior combination is inapt for obviousness purposes." (internal

quotations omitted)); *KSR*, 550 U.S. at 421 ("A person of ordinary skill is also a person of ordinary creativity, not an automaton.").

Additionally, Patent Owner, in detailing this comparison analysis that allegedly would have been conducted by a person of ordinary skill in the art, implicitly concedes that such a person had a very high level of skill, which further supports a conclusion of obviousness. *See, e.g.*, PO Resp. 49 (arguing that "a POSITA would have recognized that positioning the coil in the allegedly available space behind the optical elements would limit the size of the coil, and by extension, reduce the device's wireless power transmission rate and efficiency," but not going so far as to argue that it would have been inoperable) (citing Ex 2019 ¶ 157)); *id.* at 54–55 (arguing that an ordinary artisan would model the two combinations and observe that Petitioner's purportedly constrained combination would charge a device in 10 hours versus 1 hour for Patent Owner's alternative combination). And, Patent Owner's arguments as to how a person of ordinary skill in the art purportedly would compare and contrast the placement behind the cover glass (the claimed alternative) versus another configuration requires the person of ordinary skill to be thinking of the claimed configuration in order to make such a comparison. In other words, for a person of ordinary skill in the art to consider the configuration, weigh the pros and cons of that configuration, and then decline to actually build a device having that particular configuration, the artisan would have to recognize that configuration. *See, e.g.*, PO Resp. 49 (Patent Owner arguing that "a POSITA would have recognized that positioning the coil in the allegedly available space behind the optical elements would limit the size of the coil, and by extension, reduce the device's wireless power transmission rate and

efficiency."). Patent Owner's argument, if correct, is that a particular alternative combination would have been preferred by a person of ordinary skill in the art, but does not undermine Petitioner's showing that the claimed and purportedly less desirable combination would have been obvious. After performing the comparison that purportedly indicates the undesirability of the proposed combination, that combination would not vanish from the artisan's mind and suddenly become non-obvious.

We determine that Petitioner has demonstrated by a preponderance of the evidence that Kotanagi in combination with Honda discloses or suggests a wireless charging receive coil positioned within the housing and aligned with the opening and a cover over the biosensor module that is configured to pass both optical signals and wireless power. We also determine that Petitioner has shown that a person of ordinary skill in the art would have been motivated to make the combination proposed by Petitioner and would have had a reasonable expectation of success in doing so.

*c. [9d] a battery operably coupled to the wireless charging receive coil*

Petitioner contends that "Kotanagi teaches a 'rechargeable battery 13,' which can be connected for 'contactless,' or wireless, charging." Pet. 25 (citing Ex. 1005 ¶ 53). Petitioner further contends that "Honda specifically teaches a rechargeable battery coupled to a wireless charging coil." *Id.* (citing Ex. 1006, 6:25–27 (Honda stating: "The watch body 201 includes a circuit board 221, connected to a secondary battery 220 and a watch-side coil 210.")). Petitioner additionally contends that, "[t]o obtain power, a POSITA would have included a coil in the Kotanagi device and connected it to Kotanagi's battery, as taught by Honda's battery connection from coil to battery." *Id.* at 26 (citing Ex. 1003 ¶¶ 122–123). Patent Owner does not

raise any arguments regarding these contentions beyond those addressed above (e.g., that there is no motivation to make the proposed combination).

*d. Conclusion as to Independent Claim 9*

Having considered the parties' arguments and evidence, we determine that Petitioner has shown by a preponderance of the evidence that the subject matter of independent claim 9 would have been obvious over Kotanagi and Honda.

*4. Independent Claim 15*

Petitioner contends that independent claim 15 would have been obvious over Kotanagi and Honda. Pet. 41–50. Independent claim 15 recites a watch that is similar to the electronic device of independent claim 9. *See* Ex. 1001, 59:32–60:7. One difference is that claim 15 recites, rather than a cover configured to pass signals and power, the biosensor module and wireless charging receive coil positioned and configured to receive signals and wireless power, respectively, "through the opening of the housing." *Id.* at 60:1–7. Petitioner's contentions for claim 15 are similar to those of claim 9. *See, e.g.*, Pet. 44–50 (addressing the "opening" limitations). Patent Owner does not raise any arguments regarding Petitioner's contentions for claim 15 beyond those addressed above for independent claim 9. *See* PO Resp. 59–61; PO Sur-reply 17.

Having considered the parties' arguments and evidence, we determine that Petitioner has shown by a preponderance of the evidence that the subject matter of independent claim 15 would have been obvious over Kotanagi and Honda.

*5. Dependent Claim 11*

Claim 11 depends directly from independent claim 9 and recites that "the wireless charging receive coil has a coil diameter that is less than a

diameter of the biosensor module; and the wireless charging receive coil is configured to receive the wireless power through the biosensor module." Ex. 1001, 59:12–13. The pertinent aspect for purposes of this decision is the relative sizes of the charging coil and the biosensor module.

Petitioner contends that the claimed "biosensor" includes both the cover and the biosensor elements (i.e., LEDs and photodetector). Pet. 36; Pet. Reply 28 ("Apple's argument [for claim 11] fails because the biosensor module may include a cover."). Although, in claim 11, the pertinent relative relationship is between the diameters of a *biosensor module* and the charging coil, Petitioner purports to compare the sizes of Kotanagi's *cover glass* and the coil of the proposed combination. *See* Pet. at 36–40; *see also id.* at 37 (asserting that "Honda teaches that the wireless charging receive coil has a diameter smaller than that of its cover glass[.]").

For the reasons discussed above in the claim construction section, we do not agree with Petitioner's claim interpretation position and determine that, in independent claim 9 and, by extension, its dependent claim 11, the "biosensor module" and "cover" are two separate components. *See supra* Section II.C.1. Petitioner's challenge to claim 11 is based on this rejected interpretation. Petitioner does not identify a component in the proposed combination that it contends is a biosensor module absent the cover, and does not explain adequately how the coil would have a smaller diameter than that of a coverless biosensor module. *See, e.g.*, Pet. 39 (proposing an alternative modification placing "a coil behind the cover glass, surrounding the LED and PD").

We determine that Petitioner has not shown by a preponderance of the evidence that claim 11 of the '783 patent is unpatentable.

*6. Dependent Claims 10, 19, and 20*

The remaining claims challenged in Ground 1 are all dependent claims. Petitioner identifies teachings in the prior art references that teach or suggest the limitations of dependent claims 10, 19, and 20, and provides persuasive reasoning as to why the claimed subject matter would have been obvious to one of ordinary skill in the art. Pet. 33–36, 50–52. For these claims, Patent Owner does not present arguments beyond those regarding the independent claims and discussed above. *See* PO Resp. 75 ("Claims 2–5, 7–8, 10, 13–14, and 17–20 are not rendered obvious by the presented combination for at least the reasons described above with reference to independent claims from which these claims depend."); PO Sur-reply 36.

Having considered Petitioner's arguments and evidence, we determine that Petitioner has demonstrated that the combination of Kotanagi and Honda renders obvious claims 10, 19, and 20.

*E. The Alleged Obviousness of Claim 16 Over Kotanagi, Honda, and optionally in further combination with Park (Ground 2)*

Petitioner alleges that dependent claim 16 would have been obvious over Kotanagi and Honda or, in the alternative, Kotanagi and Honda and Park. *See* Pet. 53–57.

Claim 16 depends directly from independent claim 15 and recites, in pertinent part, that "the electronic watch is configured to magnetically couple with the external inductive power transmitter dock." Ex. 1001, 60:12–13.

Petitioner offers two alternative contentions as to how the relied-on prior art teaches magnetic coupling. *See* Pet. 54–55. The first alternative is where the "magnetically couple" limitation is satisfied by the inductive charging. *See id.* Specifically, Petitioner contends that Honda's charging

coils are magnetically coupled with each other. *Id.* (citing Ex. 1006, 6:36–40, Figs. 4, 10). For the reasons discussed above in the claim construction section, we determine that claim 16 requires something more than coupling due to charging. *See supra* Section II.C.2. Accordingly, Petitioner's first alternative is not persuasive.

Petitioner offers a second alternative "if 'configured to magnetically couple' is construed to require, in addition to the magnetic coupling of induction, magnetic coupling for alignment." Pet. 55. Petitioner contends that, if the claim requires something in addition to the magnetic coupling of induction, "a POSITA would have been motivated by Honda (EX1006 1:48–59) to look to Park, which teaches using magnets to align devices in wireless charging stations." Pet. 55 (citing Ex. 1015, Fig. 14; Ex. 1012, Fig. 14; Ex. 1003 ¶ 175). According to Petitioner, "Park explains that 'attractive force may be generated between the first magnet 12 and the second magnet 30' to optimize 'wireless power transfer efficiency.'" *Id.* at 55–56 (citing Ex. 1015, 34; Ex. 1012 ¶ 204). Petitioner maintains that "[a] POSITA would have used Park's solution: permanent magnets to reduce the distance, 'thereby improving wireless power transfer efficiency.'" *Id.* at 56 (citing Ex. 1012 ¶ 192; Ex. 1015, 32; Ex. 1003 ¶¶ 177–178). Petitioner contends that there are two motivations to combine the references' teachings. *See id.* at 56. First, Petitioner reasons that "[a] POSITA would have been motivated to combine [Honda and Park] based at least on Honda's description of a 'socket' where the watch body is 'seated in alignment' in Honda's station." *Id.* (citing Ex. 1006, 6:4–11). Second, Petitioner contends that "[m]otivation also stems from Park, which teaches disadvantages of existing wireless

charging schemes ('limited distance . . . efficiency is somewhat low.')." *Id.* (citing Ex. 1012 ¶ 8; Ex. 1015, 5; Ex. 1003 ¶¶ 177–178).

Patent Owner argues that Petitioner has failed to demonstrate an adequate reason to combine the references' teachings. PO Resp. 62–66. We agree.

Petitioner's first statement of motivation is, in effect, that Honda, without being modified by Park, has addressed the alignment issue by the use of a socket, i.e., the nesting of the watch in the charging station. *See* Pet. 54 (reproducing Honda's Figures 1 and 2); *id.* at 56. In the Reply brief, Petitioner confirms that its proposed combination retains Honda's socket solution and adds Park's magnet solution to address the same issue.[7] Pet. Reply 31. Park, unlike Honda's nesting configuration, depicts, in the figure relied on by Petitioner, the watch and charging station having flat mating surfaces, thus indicating why Park needed magnets to align and pull together the two components. *See id.* at 30 (relying on an annotated version of Park's Figure 14); Ex. 1012 ¶ 204 (Park addressing the situation where "a user may incorrectly place the terminal on the cradle 10 such that a change width α of the flux density sensed by the hall sensor 16 is less than a predetermined

---

[7] Petitioner, in its challenge to the underlying independent claim relies on Honda's socket and the physical similarity of Kotanagi's and Honda's systems (impliedly because both references are assigned to the same parent company). *See* Pet. 25, 28–30; Ex. 1063, 22 (Petitioner's demonstrative exhibit reproducing a figure originally included on page 94 of the Petition and depicting Kotanagi's watch superimposed over Honda's docking station in support of the argument that "Kotanagi's watch profile fits intimately into Honda's charging station profile."); *see also* Pet. 50 (for independent claim 15, relying on the same motivation arguments made for independent claim 1).

critical value."). Dr. Anthony credibly testifies that, "[i]n contrast [to Park's magnet solution to the incorrect-placement problem], Honda provides a particular alignment mechanism—a socket that avoids incorrect device placement therein and helps align the device with the charging station, and "[t]herefore, the problem that Park seeks to solve with its magnets is already solved by Honda's device." Ex. 2019 ¶¶ 201–202 (citing Ex. 1006, 6:8–11, Figs. 1, 2; Ex. 1012 ¶ 204).

Petitioner, in the Reply, argues that there would be "wiggle room" when Honda's watch is seating in its socket, and asserts that Park's "alignment system can perform further alignment." Pet. Reply 30–31. We find this "wiggle room" contention and Dr. Duckworth's corresponding opinion to be unduly speculative and not credible as Petitioner and Dr. Duckworth rely on an unscaled drawing of an unseated watch and of something other than the proposed combination, namely, Honda's watch and cradle (with the watch floating above the cradle) whereas the proposed combination utilizes Kotanagi's watch modified to have a charging coil in addition to a biosensor. *See id.* at 30 (Petitioner's annotated figure of Honda's Figure 2); Ex. 1060 ¶ 371. Further, this argument is contradicted by Honda's indication that it addresses the "need [prior to Honda] for an arrangement which is intrinsically less affected from a modest degree of displacement between the two coils" by having "the socket 101 . . . shaped to be slightly larger than a body 201 . . . and a band 202 of the electronic watch 200, [such that] the watch body 201 is seated in alignment in the station 100." Ex. 1006, 1:57–59, 6:8–11; *cf.* Pet. Reply 29 (citing this column 1 "Background Art" statement as if Honda was explaining that the need remained after Honda's disclosure of a solution). We are not

persuaded by Petitioner's belated and self-serving characterization of Honda's configuration as sloppy and Park's as "elegant" and extremely precise. *See* Pet. Reply 29–31 (citing, inter alia, Ex. 1060 ¶¶ 369–372); *cf.* PO Sur-reply 17–18 ("[The Reply revises the combination by advancing new theories and evidence under the guise of addressing the POR's arguments. . . . These new theories/evidence should be rejected as untimely and improper.").

Petitioner's second statement of motivation is based on the argument that Park teaches that then-existing wireless charging schemes have disadvantages, and Petitioner then includes the parenthetical quote, "limited distance . . . efficiency is somewhat low." Pet. 56 (citing Ex. 1012 ¶ 8; Ex. 1015, 5. According to Petitioner, this would have motivated a person of ordinary skill in the art to use Park's solutions of "permanent magnets to reduce the distance, 'thereby improving wireless power transfer efficiency.'" *Id.* (citing Ex. 1012 ¶ 192; Ex. 1015, 32; Ex. 1003 ¶¶ 177–178). This argument is not persuasive at least because Petitioner's declarant, Dr. Duckworth, agreed on cross-examination that Honda's unmodified configuration would have the glass components covering the watch coil and charging coil directly adjacent to each other. Ex. 2043, 36:5–17. Thus, adding Park's magnets could not pull those devices closer together.

In the Reply, Petitioner presents a new motivation argument, contending, counterintuitively, that "Honda [as unmodified] recognizes and addresses misalignment regardless of the socket." Pet. Reply 31 (citing Ex. 1006, code (57) (Abstract)). The referenced solution in Honda's Abstract is making the diameter of one coil larger than its mate so as to reduce the detrimental effects of any displacement. Ex. 1006, code (57); *see*

*also* Pet. Reply 29–30 ("Honda provides one solution of modifying the inner diameter of one of the coils to counter misalignment" (citing Ex. 1006, Fig. 10)). Thus, Honda again indicates that its solutions are adequate, and Petitioner has not explained adequately or persuasively why Honda's disclosure of a solution would motivate a person of ordinary skill in the art to add yet another solution to an issue resolved in the unmodified Honda configuration.

We determine that Petitioner has not explained adequately in the Petition why a person of ordinary skill in the art would have utilized two alternative solutions in the same watch and charging station pair, particularly where Honda socket solution—which more closely matches the proposed combination as opposed to Park's flat surface situation—is so effective. Accordingly, we determine that Petitioner has not shown by a preponderance of the evidence that claim 16 of the '783 patent is unpatentable.

### *F. The Alleged Obviousness of Independent Claims 1–7 and 14 Over Kotanagi and Honda and, Alternatively, Over Kotanagi, Honda, and Kateraas (Ground 3)*

Petitioner alleges that claims 1–7 and 14 of the '783 patent would have been obvious over Kotanagi and Honda or, in the alternative, over Kotanagi, Honda, and Kateraas. *See* Pet. 57–69 (addressing independent claim 1). Of those challenged claims, claim 1 is independent.

#### *1. Independent Claim 1*

Independent claim 1 is similar to independent claims 9 and 15. Claim 1, generally speaking, recites an electronic device having housing with a band to secure the device to a user, and with the housing having two openings on opposite sides. *See* Ex. 1001, 58:2–7. A display is in the first opening and a ceramic cover is over the second opening (i.e., in the back of

an electronic watch). *See id.* at 58:7–10. A biosensor is in the second opening and below the ceramic cover, and a wireless charging receive coil is aligned with that same opening and is below the ceramic cover. *See id.* at 58:11–15. The ceramic cover is configured to pass both optical signals of the biosensor module and wireless power from an external charging device to the receive coil. *See id.* at 58:17–21.

Petitioner contends that a person of ordinary skill in the art would understand that the claim term "ceramic" encompasses glass as well as sapphire. Pet. 13 (claim construction section; citing, *inter alia*, Ex. 1001, 26:16–19 ("the rear cover 608 may be formed from a sapphire sheet . . . ."); Ex. 1003 ¶¶ 45–49; Ex. 1044, 11; Ex. 1045, 12; Ex. 1042, 8, 10). Petitioner further contends that Kotanagi's cover glass 23 satisfies the "ceramic cover" limitation. Pet. 60 (citing Ex. 1003 ¶ 187). In the alternative, Petitioner asserts that Kateraas (Ex. 1014) teaches using a ceramic, namely sapphire, as a window for infrared sensors in a biosensor watch, and asserts that the combination of Kotanagi, Honda, and Kateraas renders obvious claimed subject matter having a ceramic cover. Pet. 60–64 (citing, *inter alia*, Ex. 1003 ¶¶ 46, 189).

Patent Owner does not raise any arguments regarding Petitioner's contentions for claim 1 beyond those addressed above for independent claim 9. *See* PO Resp. 66–68; PO Sur-reply 17.

Having considered the parties' arguments and evidence, we determine that Petitioner has demonstrated that the combination of Kotanagi and Honda and the alternative combination of Kotanagi, Honda, and Kateraas renders obvious independent claim 1.

*2. Dependent Claim 6*

Claim 6 depends directly from independent claim 1 and recites: "the ceramic cover is a disk having a disk diameter that is greater than an opening diameter of the second opening; and the ceramic cover forms a water-tight seal with the housing along a perimeter of the ceramic cover." Ex. 1001, 58:44–49.

For the round disk of dependent claim 6, Petitioner contends that "Kotanagi teaches a protruding disk in its Figure 8, for example: 'For example, as illustrated in FIG. 8, the protruding part 4 may be formed so that the outer periphery is circular.'" Pet. 77 (citing Ex. 1005 ¶ 76). Petitioner, after reproducing an annotated version of Kotanagi's Figure 8, further contends:

> This disk covers the opening and therefore has at least the same diameter, if not a larger diameter, than the opening. However, Kotanagi does not specifically state that this disk is a ceramic cover forming a water-tight seal.

*Id.* at 78. Petitioner then turns to Honda, asserting that "Honda teaches a cover with a diameter that is 'greater than an opening diameter of the second opening,'" *id.* at 78, and further asserts that Honda teaches the water-tight seal aspect of the claim, *id.* at 79–80. Petitioner's contention as to a motivation to combine the references' teachings is directed to the water-tight seal. *See id.* at 80.

Patent Owner argues that Petitioner is improperly using Kotanagi's different embodiments for claims having the same limitations. *See, e.g.*, PO Resp. 71, 73; *see also* PO Sur-reply 22–23 ("Notably, the Petition's claim 1 analysis did not reference Kotanagi's FIG. 8. . . . Then, for claim 6, the Petition exclusively focused on FIG. 8's embodiment. Masimo thus failed to

reconcile how its claim 1 mappings based on FIG. 5's embodiment would apply in the context of FIG. 8's embodiment relied upon for claim 6.").

As a dependent claim, claim 6 includes all of the limitations of the underlying independent claim 1. 35 U.S.C. § 112(d) ("A claim in dependent form shall be construed to incorporate by reference all the limitations of the claim to which it refers."). For independent claim 1, Petitioner relied on Kotanagi's embodiment depicted in Figures 5 and 7. *See, e.g.*, Pet. 60, 64–65; *cf. id.* at 71 (for dependent claim 3, utilizing the locations of the biosensor elements relative to the cover glass as depicted in Figures 5 and 7). That embodiment has a protruding part 4 with "a keyhole-like shape formed by combining, with a central circle, two circles having a smaller diameter than the central circle so as to sandwich the central circle from the left and right sides," and a rectangular cover glass 23. Ex. 1005 ¶¶ 54–55, Fig. 5.

However, for the disc (circular cover) limitation of dependent claim 6, Petitioner relies on the round protruding part 4 of the embodiment of Figure 8. Pet. 77–78; *see also* Tr. 27:5–18 (Petitioner confirming that the proposed combination relies on Kotanagi's Figure 8 circular component, and then turns to Honda to make that circular component a watertight, glass cover). Petitioner's challenge does not include a modification of the keyhole-shaped protruding part and rectangular cover embodiment to have a circular protruding part and cover of Figure 8. *See id.*; *see also* Tr. 27:5–9 ("Our combination is to take the circular shape from figure eight . . . . And so, there's no intermediate step of removing any rectangular cover. We're starting with figure eight's circular shape . . . ."); *id.* at 28:15–18 ("The petition in claim six never relies on the rectangular cover for the petition. So

we're not taking the rectangular cover and changing its shape. We're taking the circular portion . . . of Kotanagi's figure eight embodiment, which shows the circular portion."). Petitioner's challenge to dependent claim 6 also does not demonstrate how all the limitations of the underlying independent claim 1 are satisfied by the circular Figure 8 embodiment. *See* Pet. 77–80.

Accordingly, even if Petitioner has shown that the disc limitation of dependent claim 6 is disclosed or taught by Kotanagi Figure 8 embodiment in combination with Honda, Petitioner has not shown adequately that the remaining limitations of claim 6, namely those recited in the underlying independent claim 1, are disclosed or taught by that same Figure 8 (round protruding part) combination. We determine that Petitioner has not shown by a preponderance of the evidence that claim 6 of the '783 patent is unpatentable.

*3. Dependent Claim 7*

Claim 7 depends from independent claim 1 and recites, *inter alia*, "the second opening has an opening diameter; the wireless charging receive coil has a coil diameter that is less than the opening diameter." Ex. 1001, 58:51–53. Petitioner's challenge to dependent claim 7 is similar to that discussed above for dependent claim 6, which calls for the ceramic cover for the opening to be a disc, i.e., circular. *See* Pet. 80–83; *see also* Ex. 1001, 58:8 (claim 1 reciting, "a ceramic cover disposed over the second opening").

Petitioner initially relies on the rectangular cover of Kotanagi's Figure 5. *See* Pet. 81 (reproducing an annotated version showing the rectangular cover glass in red and asserting that, "[i]n some figures, Kotanagi illustrates the opening and cover with a roughly rectangular shape, with rounded corners."). And, like its challenge to dependent claim 6, Petitioner notes that Kotanagi has another embodiment with a circular

component. *Id.* In that regard, Petitioner states: "Although the 'cover glass' in the Kotanagi figures above is not circular, Kotanagi also teaches a protruding disk in its Figure 8: 'the protruding part 4 may be formed so that the outer periphery is circular' and Kotanagi describes its diameter: 'the diameter of the protruding part 4 illustrated in FIG. 8 is set to 20 mm.'" *Id.* (citing Ex. 1005 ¶ 76). After asserting that the "underlying opening" of the Figure 8 embodiment has the recited "opening diameter," Petitioner turns to Honda for the coil-to-opening relative diameter aspect of the claim. *See id.* at 82–83. Petitioner does not articulate a modification of Kotanagi's rectangular component to have the circular configuration of Figure 8, and does not set forth contentions as to how the Figure 8 embodiment teaches all the limitations of the underlying independent claim 1. *See id.* at 80–83. Accordingly, we determine that Petitioner has not shown by a preponderance of the evidence that claim 7 of the '783 patent is unpatentable.

*4. Dependent Claims 2–5 and 14*

The remaining claims challenged in Ground 3 are all dependent claims. Petitioner identifies teachings in the prior art references that teach or suggest the limitations of dependent claims 2–5 and 14, and provides persuasive reasoning as to why the claimed subject matter would have been obvious to one of ordinary skill in the art. Pet. 69–77, 83–86. For these claims, Patent Owner does not present arguments beyond those regarding the independent claims and discussed above. *See* PO Resp. 75; PO Sur-reply 36.

Having considered Petitioner's arguments and evidence, we determine that Petitioner has demonstrated that the combination of Kotanagi and Honda and the alternative combination of Kotanagi, Honda, and Kateraas renders obvious claims 2–5 and 14.

### *G. The Alleged Obviousness of Dependent Claims 12, 13, 17, and 18 Over Kotanagi, Honda, and Jabori, and, Optionally, in Further Combination with Park (Ground 4)*

Petitioner alleges that dependent claims 12, 13, 17, and 18 would have been obvious over Kotanagi, Honda, and Jabori, and, optionally, in further combination with Park. Pet. 87–99.

#### *1. Dependent Claims 12 and 13*

Claim 12 depends directly from independent claim 9, and recites, *inter alia*, "the cover is a disk having a convex shape," thus calling for a circular component. Ex. 1001, 59:17. Claim 13 depends from claim 12 and, therefore, also contains the "disk" limitation. Patent Owner argues that, as argued for dependent claim 6 (discussed above), Petitioner's proposed combination does not disclose the cover being a disk. PO Resp. 73–74; PO Sur-reply 28.

Petitioner asserts that "Kotanagi's Figure 10 shows a disk-shaped protruding part with a convex shape that protrudes away from the housing." Pet. 87 (citing Ex 1005 ¶ 80; reproducing an annotated version of Kotanagi's Figure 10). The Figure 10 embodiment is similar to the Figure 8 embodiment discussed above in the context of dependent claim 6. *See id.*; Ex. 1005, Figs. 8, 10. Similar to its challenge to dependent claim 6, Petitioner does not explain adequately how or why the proposed combination used for the underlying independent claim would be modified by the Figure 10 embodiment. *See* Pet. 87–92. Petitioner also does not explain how a combination based on Kotanagi's Figure 10 embodiment (as opposed to the articulated combination based on the Figure 5 rectangular glass embodiment) teaches all the limitations of the underlying independent

claim 9. *See id.* Petitioner's challenge to dependent claim 13 does not cure the defect regarding claim 12, from which claim 13 depends. *See id.* at 93.

Accordingly, we determine that Petitioner has not shown by a preponderance of the evidence that claims 12 and 13 of the '783 patent are unpatentable.

*2. Dependent Claims 17 and 18*

Claims 17 and 18 depend from independent claim 15 and, generally speaking, call for the watch to have a convex bottom and the charging dock to have a corresponding concave mating surface. Ex. 1001, 60:14–25. Petitioner identifies teachings in the prior art references that teach or suggest the limitations of dependent claims 17 and 18, and provides persuasive reasoning as to why the claimed subject matter would have been obvious to one of ordinary skill in the art. Pet. 94–99. For these claims, Patent Owner does not present arguments beyond those regarding the independent claims and discussed above. *See* PO Resp. 75; PO Sur-reply 36.

Petitioner relies, in part, on Honda's disclosure of a socket-type mating scheme and contends that the watch of Honda's examples and the bottom of the Kotanagi watch have convex or nearly-convex profiles, and that the Kotanagi watch would seat in a correspondingly concave-shaped Honda dock. *See* Pet. 94–97; *see also id.* at 99 (Petitioner, for the limitation of claim 18 calling for convex contoured surface configured to protrude toward the user's skin when the watch is worn, similarly asserts that Kotanagi's watch has a convex surface). We find these contentions adequate and do not rely on Petitioner's contentions and reasoning using Kotanagi's Figure 10 embodiment (as opposed to the embodiment of Figures 5 and 7 used in the combination for the independent claims). *See, e.g.*, *id.* at 96–97, 99.

Having considered Petitioner's arguments and evidence, we determine that Petitioner has demonstrated that the combination of Kotanagi, Honda, and Jabori, and, optionally, in further combination with Park renders obvious claims 17 and 18.

*H. The Alleged Obviousness of Dependent Claims 3 and 14 Over Kotanagi, Honda, Kateraas, and Fraser (Ground 5)*

Petitioner identifies teachings in the prior art references that teach or suggest the limitations of dependent claims 3 and 14, and provides persuasive reasoning as to why the claimed subject matter would have been obvious to one of ordinary skill in the art. Pet. 100–104. For these claims, Patent Owner does not present arguments beyond those regarding the independent claims and discussed above. *See* PO Resp. 75; PO Sur-reply 36.

Having considered Petitioner's arguments and evidence, we determine that Petitioner has demonstrated that the combination of Kotanagi, Honda, Kateraas, and Fraser renders obvious claims 3 and 14.

*I. The Alleged Obviousness of Dependent Claim 8 Over Kotanagi, Honda, and Jabori, and, Optionally, in Further Combination with Kateraas and/or Park (Ground 6)*

Claim 8 depends from independent claim 1 and recites, in pertinent part, "the ceramic cover has a convex contoured shape that protrudes toward the user." Ex. 1001, 58:57–58.

Petitioner, as it did for dependent claim 12 ("the cover is a disk having a convex shape"), relies on Kotanagi's Figure 10 circular embodiment for the convex cover, whereas the combination for the underlying independent claim was based on a distinct rectangular cover embodiment. Pet. 105–106; *see id.* at 105 (incorrectly citing the reproduced figure as Figure 8). For the

reasons discussed above for dependent claim 12 and the similarly argued dependent claim 6 ("the ceramic cover is a disk")—namely, that Petitioner does not explain adequately how the rectangular glass base combination would be modified by Figure 10 and does not explain adequately how the now-relied-on Figure 10 embodiment teaches the limitations of the underlying independent claim—we determine that Petitioner has not met its burden. *See supra* Sections II.G.1, II.F.2.

We determine that Petitioner has not shown by a preponderance of the evidence that claim 8 of the '783 patent would have been obvious in view of the combination of Kotanagi, Honda, and Jabori, or in further combination with Kateraas and/or Park.

## III. CONCLUSION[8]

Petitioner has shown by a preponderance of the evidence that claims 1–5, 9, 10, 14, 15, and 17–20 of the '783 patent are unpatentable. Petitioner has *not* shown by a preponderance of the evidence that claims 6–8, 11–13, and 16 of the '783 patent are unpatentable.

---

[8] Should Patent Owner wish to pursue amendment of the challenged claims in a reissue or reexamination proceeding subsequent to the issuance of this decision, we draw Patent Owner's attention to the April 2019 *Notice Regarding Options for Amendments by Patent Owner Through Reissue or Reexamination During a Pending AIA Trial Proceeding*. *See* 84 Fed. Reg. 16,654 (Apr. 22, 2019). If Patent Owner chooses to file a reissue application or a request for reexamination of the challenged patent, we remind Patent Owner of its continuing obligation to notify the Board of any such related matters in updated mandatory notices. *See* 37 C.F.R. § 42.8(a)(3), (b)(2).

In summary:

| Claim(s) | 35 U.S.C. § | Reference(s)/Basis | Claim(s) Shown Unpatentable | Claim(s) Not Shown Unpatentable |
|---|---|---|---|---|
| 9–11, 15, 19, 20 | 103 | Kotanagi, Honda | 9, 10, 15, 19, 20 | 11 |
| 16 | 103 | Kotanagi, Honda, Park | | 16 |
| 1–7, 14 | 103 | Kotanagi, Honda, Kateraas | 1–5, 14 | 6, 7 |
| 12, 13, 17, 18 | 103 | Kotanagi, Honda, Jabori, Park | 17, 18 | 12, 13 |
| 3, 14 | 103 | Kotanagi, Honda, Kateraas, Fraser | 3, 14 | |
| 8 | 103 | Kotanagi, Honda, Jabori, Kateraas, Park | | 8 |
| **Overall Outcome** | | | 1–5, 9, 10, 14, 15, 17–20 | 6–8, 11–13, 16 |

## IV. ORDER

For the foregoing reasons, it is

ORDERED that claims 1–5, 9, 10, 14, 15, and 17–20 of the ’783 patent have been proven to be unpatentable;

FURTHER ORDERED claims 6–8, 11–13, and 16 of the ’783 patent have *not* been proven to be unpatentable; and

FURTHER ORDERED that, because this is a Final Written Decision, parties to the proceeding seeking judicial review of the decision must comply with the notice and service requirements of 37 C.F.R. § 90.2.

PETITIONER:

Philip M. Nelson
Jarom D. Kesler
Ted M. Cannon
KNOBBE, MARTENS, OLSON & BEAR, LLP
2pmn@knobbe.com
2jzk@knobbe.com
2tmc@knobbe.com

PATENT OWNER:

W. Karl Renner
Roberto J. Devoto
Craig A. Deutsch
Grace Kim
Andrew Patrick
Karan Jhurani
FISH & RICHARDSON P.C.
axf-ptab@fr.com
devoto@fr.com
deutsch@fr.com
gkim@fr.com
patrick@fr.com
jhurani@fr.com