US008630234B2

(12) **United States Patent**
Bjorsell et al.

(10) **Patent No.: US 8,630,234 B2**
(45) **Date of Patent: Jan. 14, 2014**

(54) **MOBILE GATEWAY**

(75) Inventors: **Johan Emil Viktor Bjorsell**, Vancouver (CA); **Maksym Sobolyev**, New Westminster (CA); **Pentti Kalevi Huttunen**, Vancouver (CA); **Emil Malak**, Vancouver (CA)

(73) Assignee: **Digifonica (International) Limited**, Vancouver (CA)

(*) Notice: Subject to any disclaimer, the term of this patent is extended or adjusted under 35 U.S.C. 154(b) by 338 days.

(21) Appl. No.: **13/056,277**

(22) PCT Filed: **Jul. 28, 2009**

(86) PCT No.: **PCT/CA2009/001062**

§ 371 (c)(1),
(2), (4) Date: **Jan. 27, 2011**

(87) PCT Pub. No.: **WO2010/012090**

PCT Pub. Date: **Feb. 4, 2010**

(65) **Prior Publication Data**

US 2011/0122827 A1 May 26, 2011

Related U.S. Application Data

(60) Provisional application No. 61/129,898, filed on Jul. 28, 2008.

(51) **Int. Cl.**
H04W 4/00 (2009.01)

(52) **U.S. Cl.**
USPC **370/328**; 455/432.1

(58) **Field of Classification Search**
USPC 370/310–338
See application file for complete search history.

(56) **References Cited**

U.S. PATENT DOCUMENTS

4,916,491	A	4/1990	Katoh
4,992,971	A	2/1991	Hayashi
5,146,491	A	9/1992	Silver et al.

(Continued)

FOREIGN PATENT DOCUMENTS

CA	2249668	4/1999
EP	1 389 862 A1	2/2004

(Continued)

OTHER PUBLICATIONS

The International Search Report and Written Opinion mailed on Mar. 12, 2010 for corresponding PCT Application No. PCT/CA2009/001062.

(Continued)

Primary Examiner — Xavier S Wong
Assistant Examiner — M Mostazir Rahman
(74) *Attorney, Agent, or Firm* — Knobbe, Martens, Olson & Bear LLP

(57) **ABSTRACT**

A method of initiating a call to a callee using a mobile telephone involves: receiving, from a user of the mobile telephone, a callee identifier associated with the callee; transmitting an access code request message to an access server, said access code request message including said callee identifier; receiving an access code reply message from the access server in response to said access code request message, said access code reply message including an access code different from said callee identifier and associated with said callee identifier; and initiating a call with the mobile telephone using said access code to identify the callee.

78 Claims, 17 Drawing Sheets

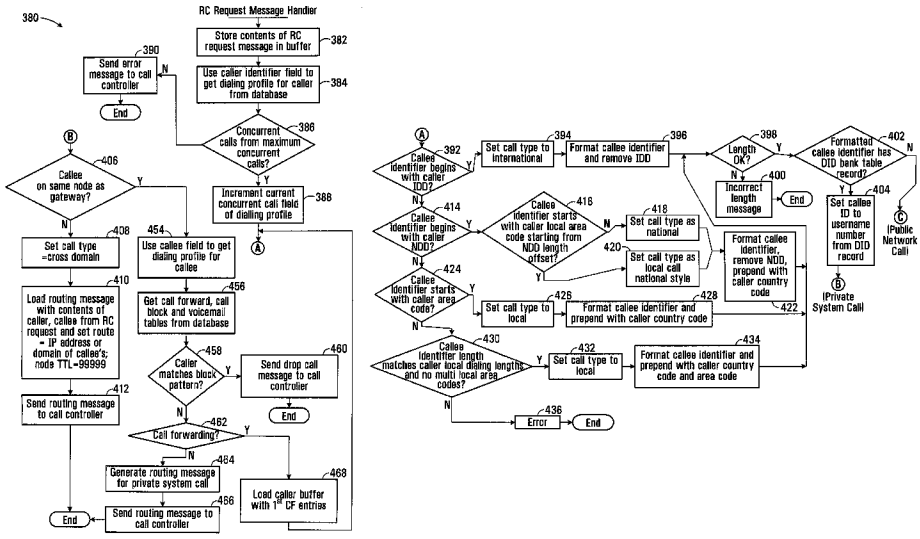

T-Mobile Exhibit 1001

(56) **References Cited**

U.S. PATENT DOCUMENTS

5,247,571	A	9/1993	Kay et al.	
5,303,297	A	4/1994	Hillis	
5,359,642	A	10/1994	Castro	
5,425,085	A	6/1995	Weinberger et al.	
5,440,621	A	8/1995	Castro	
5,454,030	A *	9/1995	de Oliveira et al.	379/100.08
5,469,497	A	11/1995	Pierce et al.	
5,506,893	A	4/1996	Buscher et al.	
5,519,769	A	5/1996	Weinberger et al.	
5,559,871	A	9/1996	Smith	
5,590,133	A	12/1996	Billstrom et al.	
5,608,786	A	3/1997	Gordon	
5,621,787	A	4/1997	McKoy et al.	
5,633,913	A	5/1997	Talarmo	
5,661,790	A	8/1997	Hsu	
5,712,907	A	1/1998	Wegner et al.	
5,724,355	A	3/1998	Bruno et al.	
5,726,984	A	3/1998	Kubler et al.	
5,737,414	A	4/1998	Walker et al.	
5,751,961	A	5/1998	Smyk	
5,793,762	A	8/1998	Penners et al.	
5,799,072	A	8/1998	Vulcan et al.	
5,802,502	A	9/1998	Gell et al.	
5,825,863	A	10/1998	Walker	
5,828,740	A	10/1998	Khuc et al.	
5,838,682	A	11/1998	Dekelbaum et al.	
5,845,267	A	12/1998	Ronen	
5,850,433	A	12/1998	Rondeau	
5,864,610	A	1/1999	Ronen	
5,867,495	A	2/1999	Elliott et al.	
5,883,891	A	3/1999	Williams et al.	
5,889,774	A	3/1999	Mirashrafi et al.	
5,905,736	A	5/1999	Ronen et al.	
5,907,547	A	5/1999	Foladare et al.	
5,910,946	A	6/1999	Csapo	
5,915,005	A	6/1999	He	
5,923,659	A	7/1999	Curry et al.	
5,930,343	A	7/1999	Vasquez	
5,937,045	A	8/1999	Yaoya et al.	
5,940,598	A	8/1999	Strauss et al.	
5,953,504	A	9/1999	Sokal et al.	
5,956,391	A	9/1999	Melen et al.	
5,970,477	A	10/1999	Roden	
5,974,043	A	10/1999	Solomon	
5,991,291	A	11/1999	Asai et al.	
6,005,926	A	12/1999	Mashinsky	
6,014,379	A	1/2000	White et al.	
6,021,126	A	2/2000	White et al.	
6,052,445	A	4/2000	Bashoura et al.	
6,058,300	A	5/2000	Hanson	
6,069,890	A	5/2000	White et al.	
6,073,013	A	6/2000	Agre et al.	
6,078,647	A	6/2000	D'Eletto	
6,104,704	A	8/2000	Buhler et al.	
6,104,711	A	8/2000	Voit	
6,115,737	A	9/2000	Ely et al.	
6,128,304	A	10/2000	Gardell et al.	
6,137,869	A	10/2000	Voit et al.	
6,141,404	A	10/2000	Westerlage et al.	
6,151,385	A	11/2000	Reich et al.	
6,188,752	B1	2/2001	Lesley	
6,282,574	B1	8/2001	Voit	
6,298,062	B1	10/2001	Gardell et al.	
6,351,464	B1	2/2002	Galvin et al.	
6,359,880	B1	3/2002	Curry et al.	
6,430,275	B1	8/2002	Voit et al.	
6,507,644	B1	1/2003	Henderson et al.	
6,597,686	B1	7/2003	Smyk	
6,674,745	B1 *	1/2004	Schuster et al.	370/352
6,724,860	B2	4/2004	Stumer et al.	
6,744,858	B1	6/2004	Ryan et al.	
6,766,159	B2	7/2004	Lindholm	
6,798,767	B1	9/2004	Alexander et al.	
6,819,929	B2	11/2004	Antonucci et al.	
6,954,453	B1	10/2005	Schindler	
6,963,557	B2	11/2005	Knox	
7,046,658	B1	5/2006	Kundaje	
7,055,174	B1	5/2006	Cope et al.	
7,068,772	B1	6/2006	Widger et al.	
7,079,526	B1 *	7/2006	Wipliez et al.	370/352
7,120,682	B1	10/2006	Salama	
7,212,522	B1	5/2007	Shankar et al.	
7,454,510	B2	11/2008	Kleyman et al.	
7,950,046	B2	5/2011	Kropivny	
8,116,307	B1	2/2012	Thesayi et al.	
2002/0051518	A1	5/2002	Bondy et al.	
2002/0116464	A1	8/2002	Mak	
2002/0122391	A1 *	9/2002	Shalit	370/260
2003/0200311	A1	10/2003	Baum	
2003/0219103	A1	11/2003	Rao et al.	
2004/0022237	A1 *	2/2004	Elliott et al.	370/356
2004/0157629	A1	8/2004	Kallio et al.	
2004/0165709	A1	8/2004	Pence et al.	
2004/0181599	A1	9/2004	Kreusch et al.	
2004/0202295	A1	10/2004	Shen et al.	
2004/0240439	A1	12/2004	Castleberry et al.	
2004/0255126	A1	12/2004	Reith	
2005/0025043	A1	2/2005	Mussman et al.	
2005/0083911	A1	4/2005	Grabelsky et al.	
2005/0094651	A1	5/2005	Lutz et al.	
2005/0169248	A1	8/2005	Truesdale et al.	
2005/0174937	A1	8/2005	Scoggins et al.	
2005/0177843	A1	8/2005	Williams	
2006/0072547	A1	4/2006	Florkey et al.	
2006/0072550	A1	4/2006	Davis et al.	
2006/0093135	A1	5/2006	Fiatal et al.	
2006/0111116	A1	5/2006	Palmer et al.	
2006/0153342	A1	7/2006	Sasaki	
2006/0160565	A1	7/2006	Singh et al.	
2006/0177035	A1	8/2006	Cope et al.	
2006/0209768	A1	9/2006	Yan et al.	
2006/0258328	A1	11/2006	Godoy	
2006/0264200	A1	11/2006	Laiho et al.	
2007/0036143	A1	2/2007	Alt et al.	
2007/0112964	A1 *	5/2007	Guedalia et al.	709/227
2007/0127676	A1	6/2007	Khadri	
2007/0253418	A1	11/2007	Shiri et al.	
2008/0037715	A1	2/2008	Prozeniuk et al.	
2008/0056235	A1 *	3/2008	Albina et al.	370/352
2008/0063153	A1	3/2008	Krivorot et al.	
2009/0028146	A1	1/2009	Kleyman et al.	
2009/0292539	A1	11/2009	Jaroker	
2009/0325558	A1	12/2009	Pridmore et al.	
2010/0086119	A1	4/2010	De Luca et al.	

FOREIGN PATENT DOCUMENTS

EP	1 389 862	B1	11/2004
WO	WO 01/89145	A2	11/2001
WO	WO 2007/044454	A2	4/2007
WO	WO 2008/052340	A1	5/2008
WO	WO 2008/064481	A1	6/2008
WO	WO 2008/116296	A1	10/2008

OTHER PUBLICATIONS

The International Preliminary Report on Patentability and Written Opinion of the International Searching Authority mailed Feb. 10, 2011 for related PCT Application No. PCT/CA2009/001062., Feb. 10, 2011.

The International Preliminary Report on Patentability mailed Feb. 13, 2009 for corresponding PCT/CA2007/002150.

The International Preliminary Report on Patentability mailed May 14, 2009 for related PCT/CA2007/001956.

The International Search Report and Written Opinion of the International Searching Authority completed Feb. 6, 2008 for corresponding PCT/CA2007/001956.

The International Search Report and Written Opinion of the International Searching Authority completed Jun. 6, 2008 for corresponding PCT/CA2008/000545.

The International Search Report completed on Mar. 3, 2008 for corresponding PCT/CA2007/002150.

T-Mobile Exhibit 1001

(56) **References Cited**

OTHER PUBLICATIONS

The Written Opinion and International Search Report completed on Jun. 17, 2010 for related PCT Application No. PCT/CA2009/001317.
Cisco. "Lawful Intercept Requirements Summary." http://www.faqs.org/rfcs/rfc3924.html. Nov. 8, 2006.
ETSI Technical Specification. "Lawful Interception (LI); Handover Interface and Service-Specific Details (SSD) for IP delivery; Part 5: Service-specific details for IP Multimedia Services." Apr. 2008, 25 pgs, v.2.3.1, France.
F. Baker et al. "RFC 3924—Cisco Architecture for Lawful Intercept in IP Networks." Oct. 2004.
M. Handley et al. "RFC 2543—SIP: Session Initiation Protocol." Mar. 1999.
Sippy SIP B2BUA. "About Sippy RTPproxy." http://www.rtpproxy.org. Jul. 15, 2009.
The International Preliminary Report on Patentability issued on Sep. 29, 2009 for PCT/CA2008/000545.
The International Preliminary Report on Patentability issued on Mar. 20, 2012 for PCT/CA2009/001317.
Townsley, et al.; "RFC 2661—Layer Two Tunneling Protocol 'L2TP'", Aug. 1999.
IP2Location, http://www.ip2location.com/; printed Jun. 20, 2012.
DOTS IP Address Validation, "Overview", http://www.serviceobjects.com/products/dots_ipgeo.asp; printed Jun. 21, 2012.
List of North American Numbering Plan area codes, http://en.wikipedia.org/wiki/List_of_NANP_area_codes; printed Jun. 20, 2012.
DOTS Phone Exchange, "Overview", http://www.serviceobjects.com/demos/PhoneExchangeDemo.asp (URL no longer valid, current URL is http://www.serviceobjects.com/products/phone/phone-exchange); printed Jun. 21, 2012.
Rosenberg, et al.; "RFC 3261—SIP: Session Initiation Protocol", Jun. 2002.
Lind AT&T S: "ENUM Call Flows for VoIP Interworking; draft-lind-enum-callflows-03.txt", Feb. 1, 2002, No. 3, pp. 1-17.
IETF ENUM WG R STASTNY OEFEG Informational Numbering for VoIP and Other IP Communications: "Numbering for VoIP and other IP Communications, draft-stastny-enum-numbering-voip-00.txt", Oct. 1, 2003, pp. 1-43.
Supplementary European Search Report for European Application No. 07816106 dated Jun. 18, 2012.
EPO, Supplementary European Search Report, dated Nov. 2, 2012, Application No. 07855436.7, corresponds to U.S. Appl. No. 12/517,026.
Wikipedia, "International mobile subscriber identity (IMSI)," http://en.wikipedia.org/wiki/IMSI, Jul. 16, 2013.
Wikipedia, "Roaming," http://en.wikipedia.org/wiki/Roaming, Jul. 16, 2013.

* cited by examiner

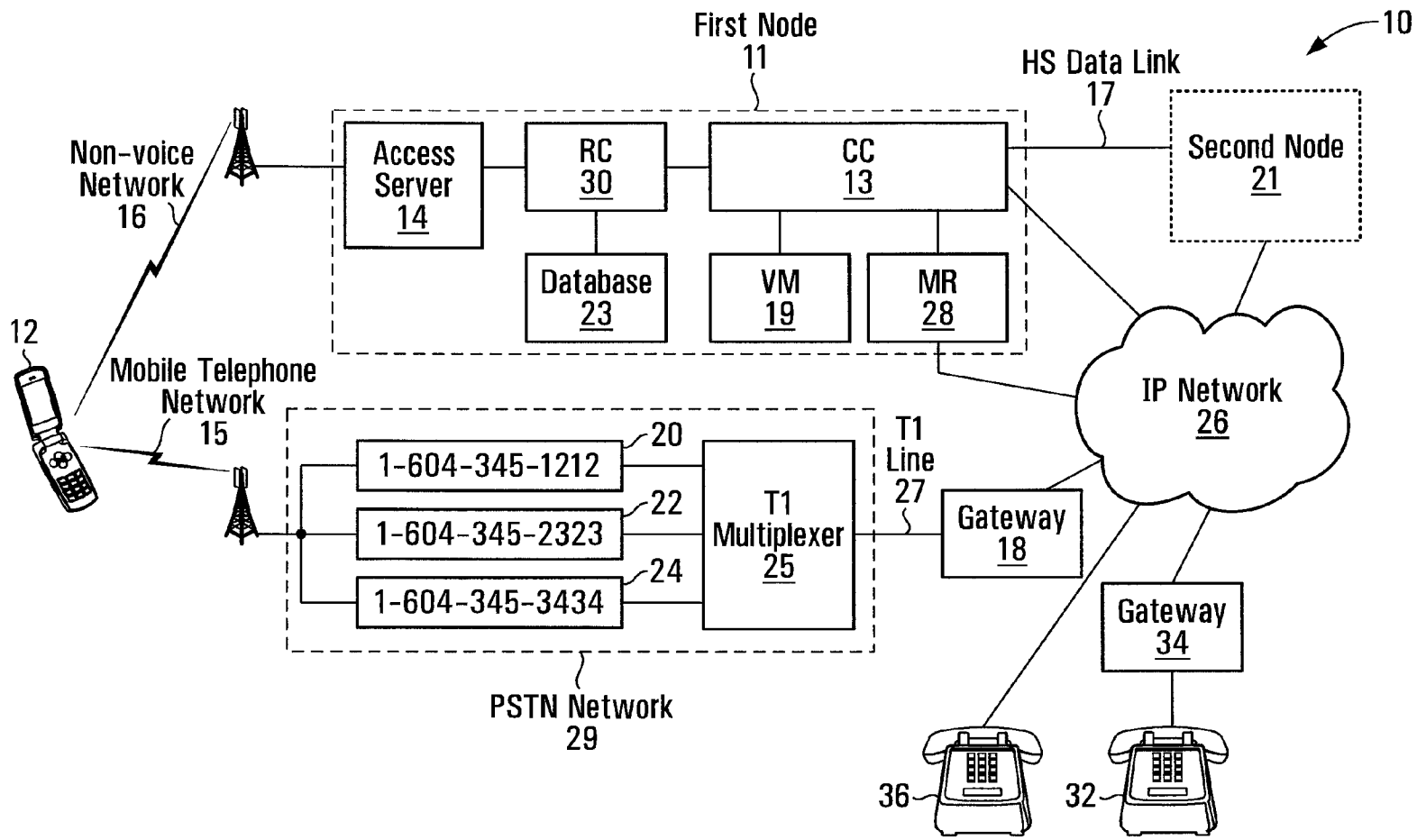
10
First Node
11
HS Data Link
17
Second Node
21
Non-voice
Network
16
Access
Server
14
RC
30
CC
13
Database
23
VM
19
MR
28
12
Mobile Telephone
Network
15
IP Network
26
1-604-345-1212
20
1-604-345-2323
22
1-604-345-3434
24
T1
Multiplexer
25
T1
Line
27
Gateway
18
Gateway
34
PSTN Network
29
36
32

FIG. 1

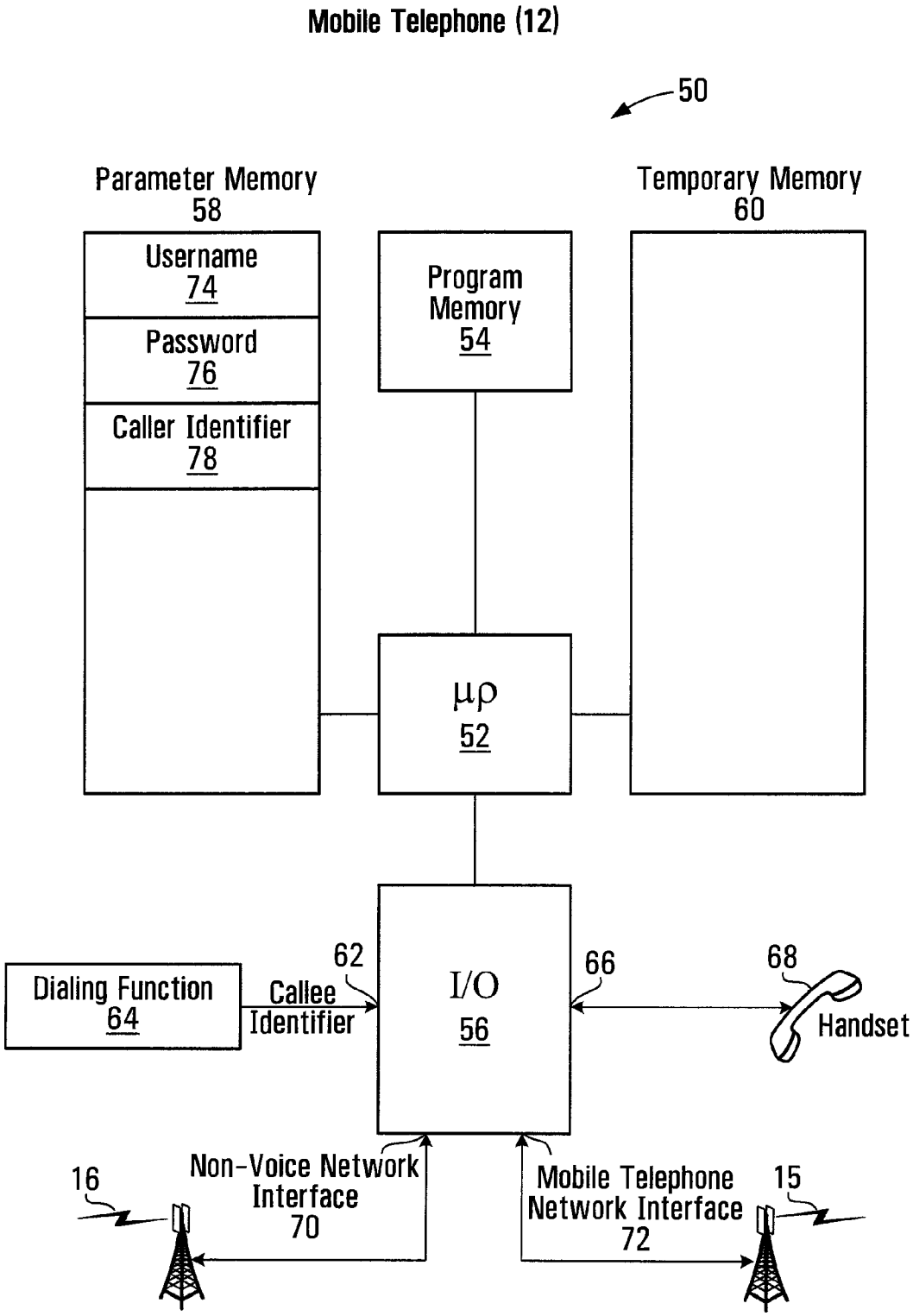
Mobile Telephone (12)
50
Parameter Memory
58
Username
74
Password
76
Caller Identifier
78
Program
Memory
54
Temporary Memory
60
μρ
52
I/O
56
Dialing Function
64
62
Callee
Identifier
66
68
Handset
16
Non-Voice Network
Interface
70
Mobile Telephone
Network Interface
72
15

FIG. 2

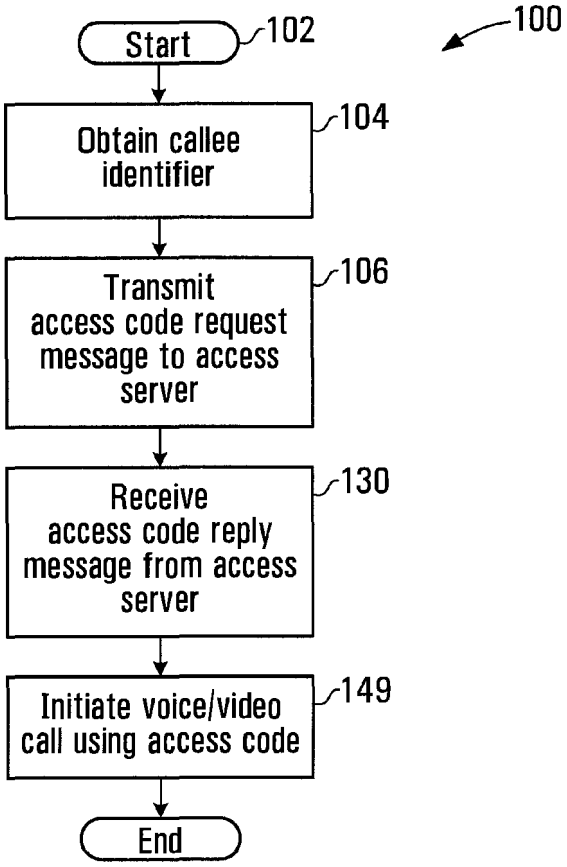

FIG. 3

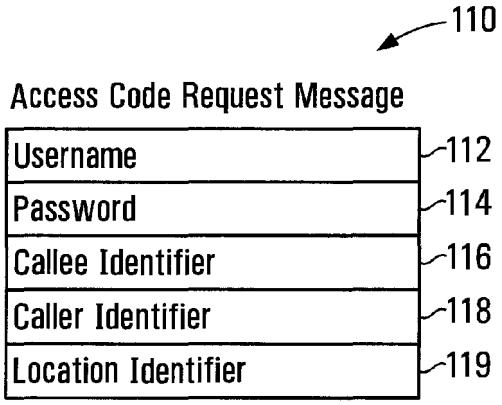

FIG. 4

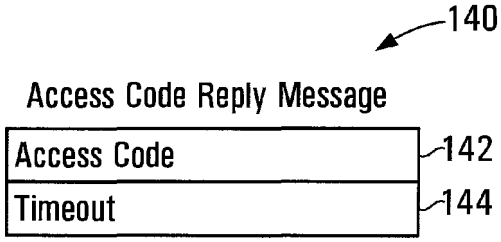

FIG. 5

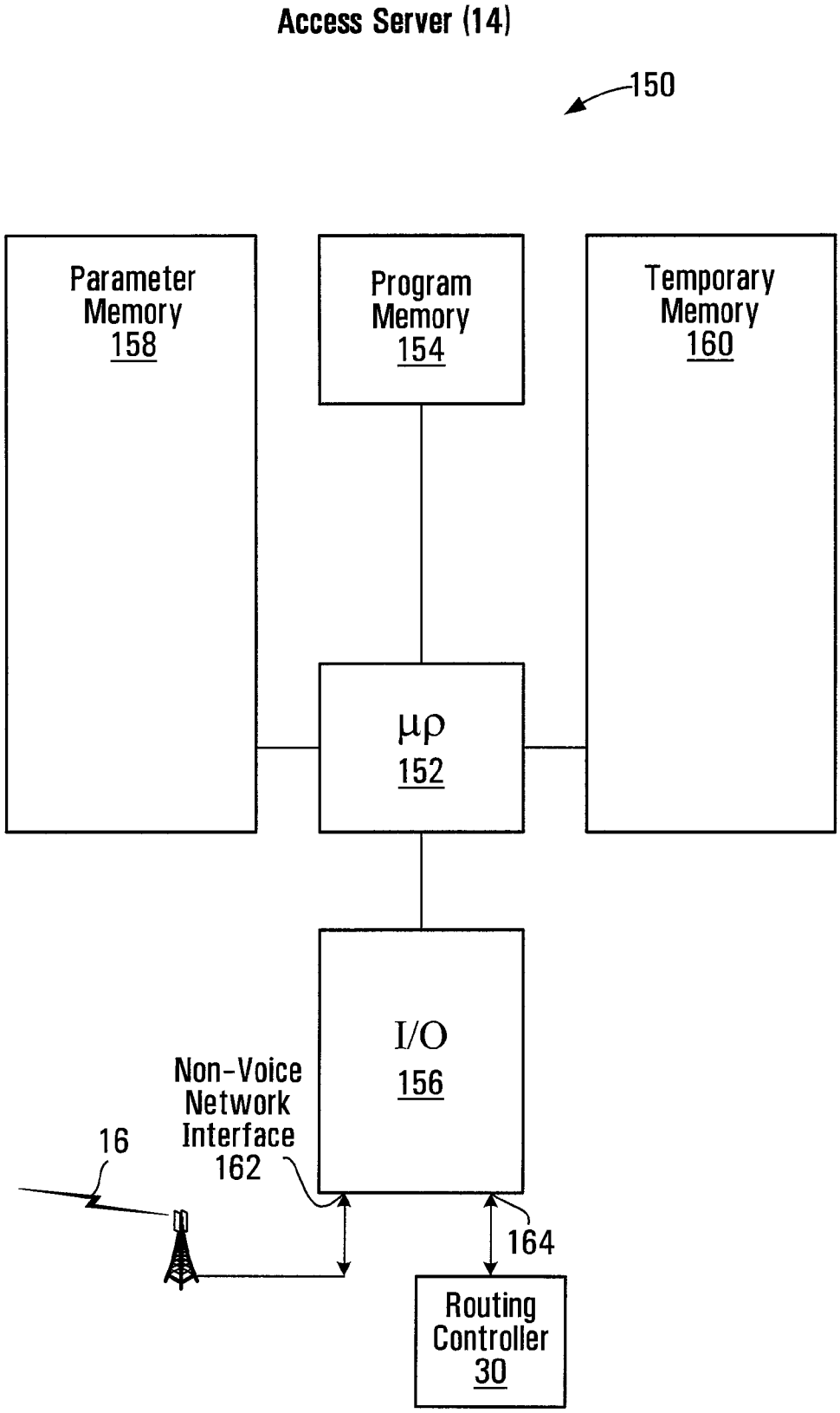
Access Server (14)
150
Parameter Memory 158
Program Memory 154
Temporary Memory 160
μρ 152
I/O 156
Non-Voice Network Interface 162
16
164
Routing Controller 30

FIG. 6

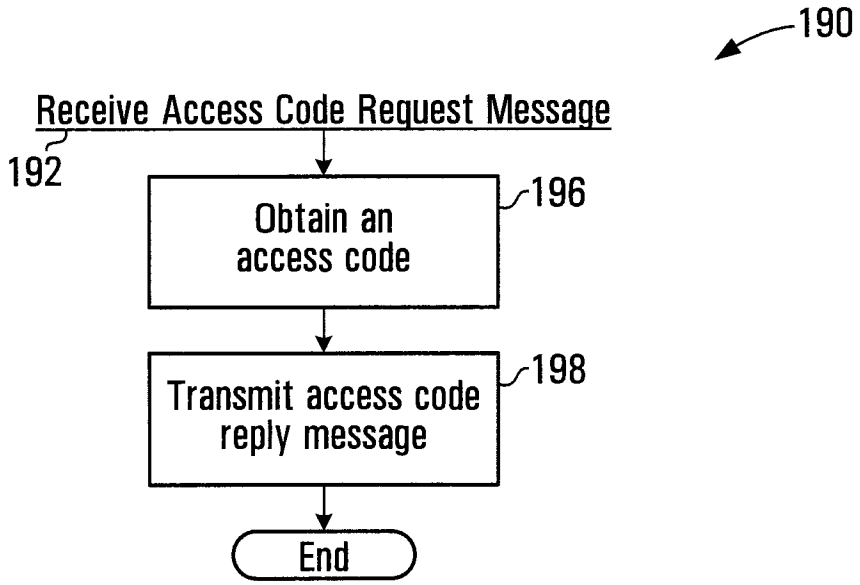
190
Receive Access Code Request Message
192
Obtain an access code
196
Transmit access code reply message
198
End

FIG. 7

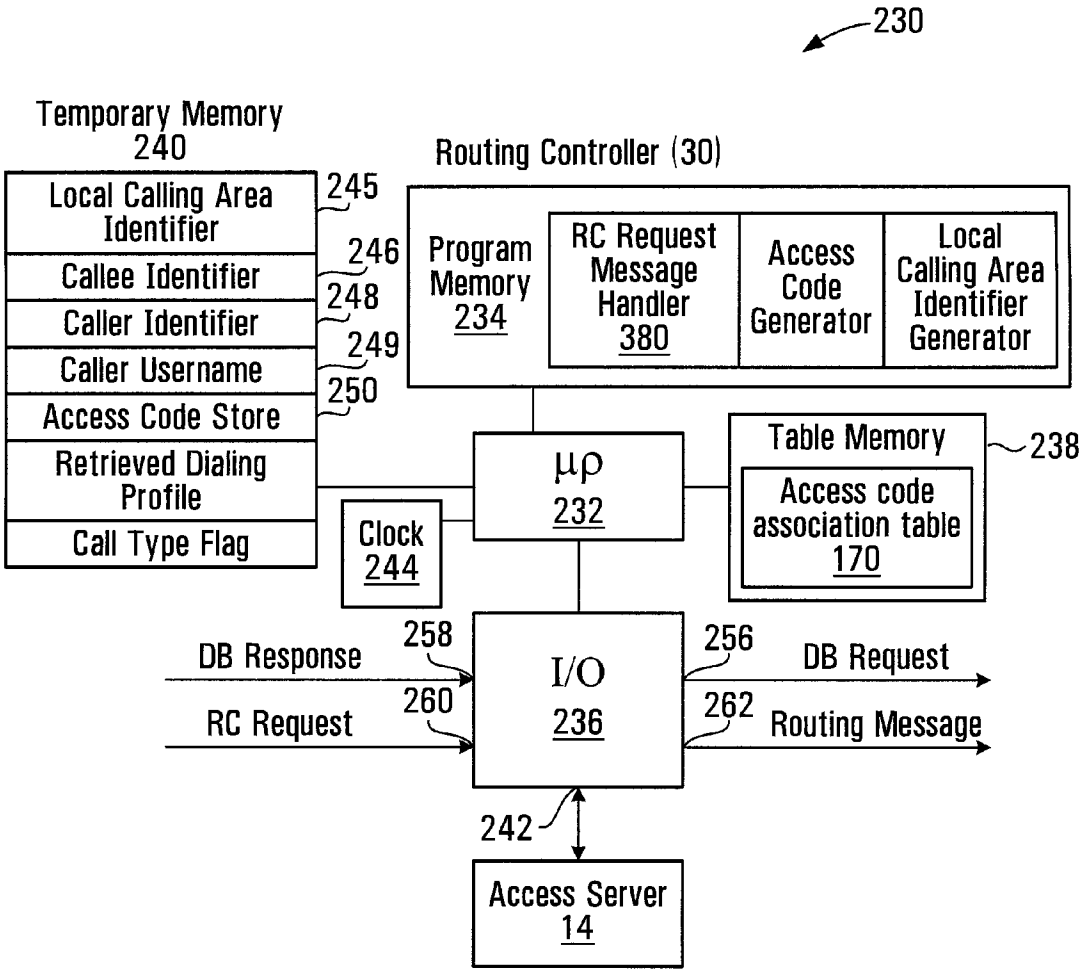
230
Temporary Memory
240
Local Calling Area Identifier
Callee Identifier
Caller Identifier
Caller Username
Access Code Store
Retrieved Dialing Profile
Call Type Flag
245
246
248
249
250
Routing Controller (30)
Program Memory
234
RC Request Message Handler
380
Access Code Generator
Local Calling Area Identifier Generator
μρ
232
Table Memory
238
Access code association table
170
Clock
244
DB Response
258
RC Request
260
I/O
236
256
DB Request
262
Routing Message
242
Access Server
14

FIG. 8

200

Dialing Profile for a User

202 Username	Assigned on Subscription
204 Domain	Domain Associated with User
206 NDD	1
208 IDD	011
210 Country Code	1
212 Local Area Codes	604;778
214 Caller Minimum Local # Length	10
216 Caller Maximum Local # Length	10
218 Reseller	Retailer
220 Maximum # of concurrent calls	Assigned on Subscription
222 Current # of concurrent calls	Assigned on Subscription
224 Default Local Calling Area Identifier	Assigned on Subscription

FIG. 9

170

	171 Local Calling Area Identifier	173 Access Code	175 Channel Identifier	177 Callee Identifier	179 Caller Identifier	183 Caller Username
172	XXXX	1-604-345-1212	20			
174	XXXX	1-604-345-2323	22	1-403-789-1234	1-416-444-1441	2001 1050 8667
176	XXXX	1-604-345-3434	24			
178	XXXX	1-416-234-4646	XX	1-604-321-1234	1-416-444-1234	2001 1050 4141
180	XXXX	1-416-234-6868	XY			

181 Timeout	182 Timestamp
10	06-15-2008 10:31
10	06-15-2008 14:21

FIG. 10

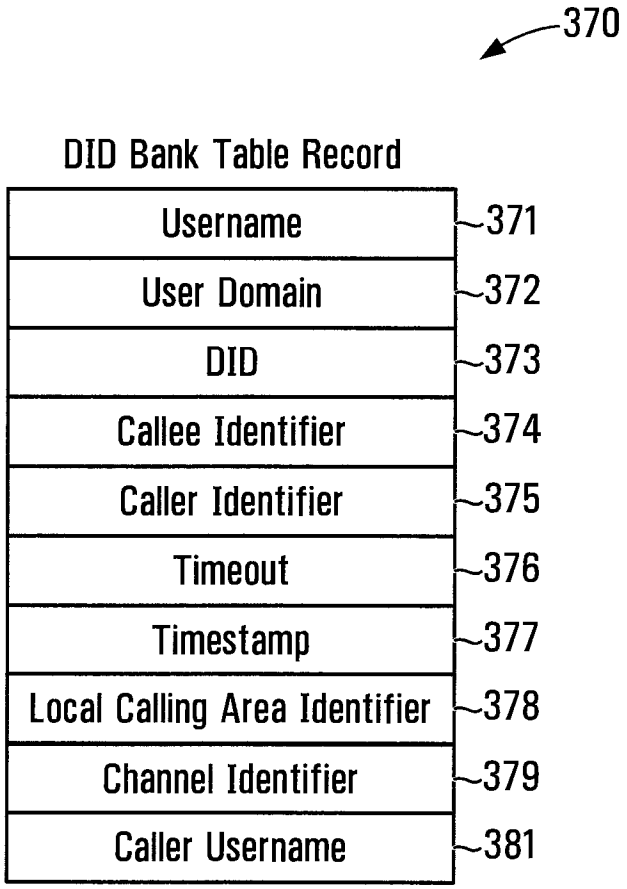
370
DID Bank Table Record
Username
371
User Domain
372
DID
373
Callee Identifier
374
Caller Identifier
375
Timeout
376
Timestamp
377
Local Calling Area Identifier
378
Channel Identifier
379
Caller Username
381

FIG. 11

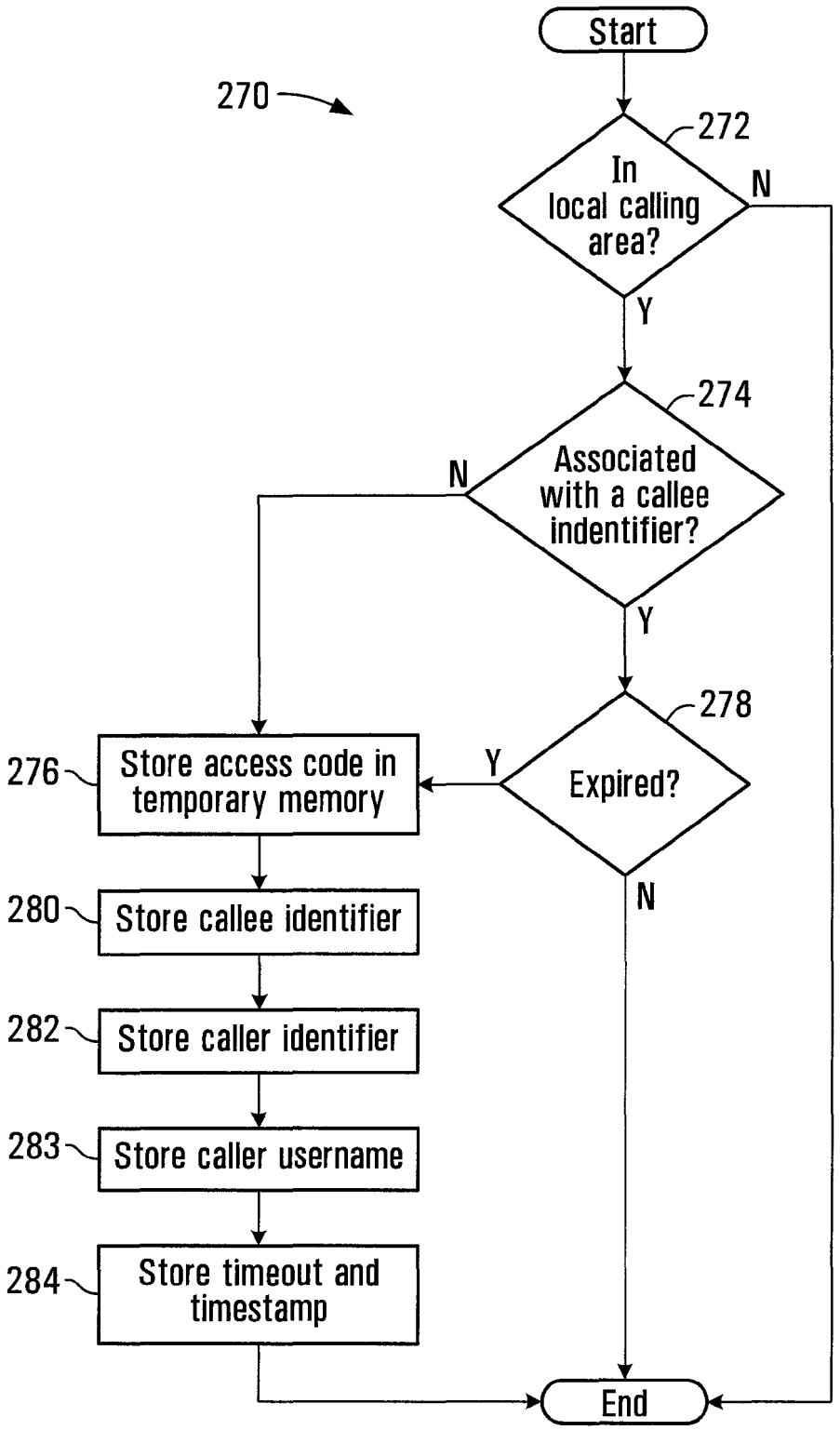
Start
270
272
In local calling area?
N
Y
274
Associated with a callee indentifier?
N
Y
278
Expired?
Y
N
276
Store access code in temporary memory
280
Store callee identifier
282
Store caller identifier
283
Store caller username
284
Store timeout and timestamp
End

FIG. 12

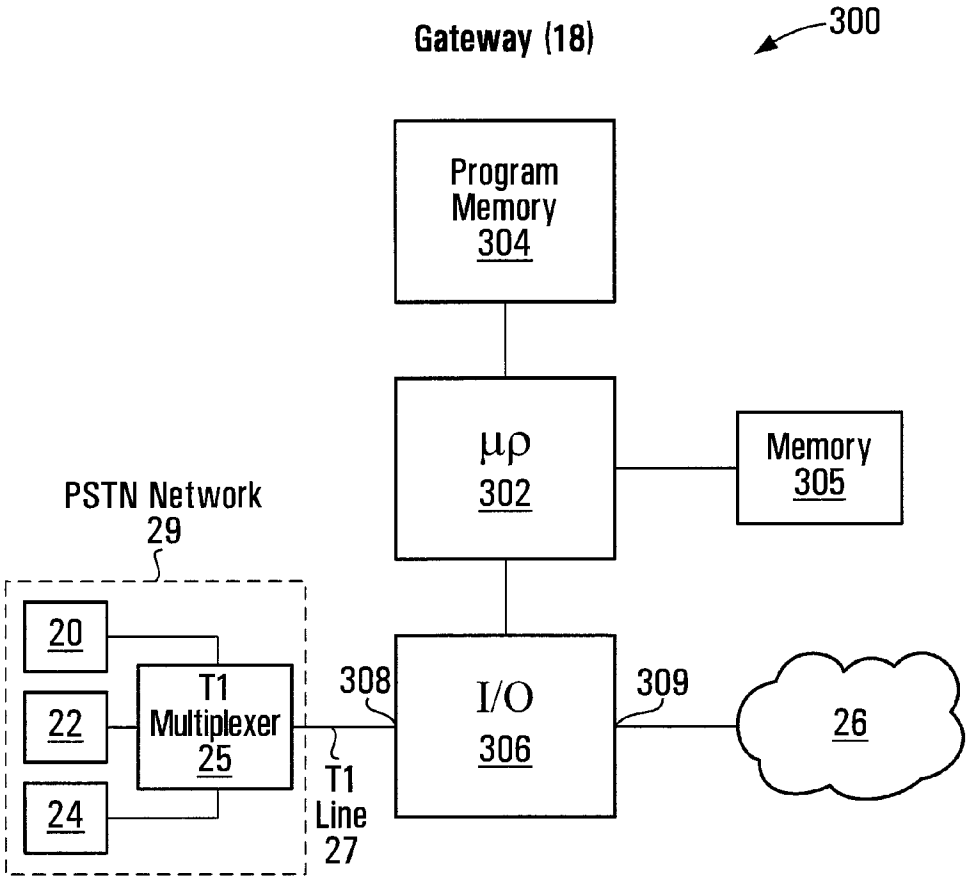

FIG. 13

310

SIP Invite Message

312	Caller Identifier	1-604-678-1234@20.14.102.5
314	Callee Identifier	1-604-345-1212
315	Digest Parameter	XXXXXXX
316	Call Identifer	FF10@20.14.102.5
317	IP Address	20.14.102.5
318	Gateway UDP Port	12378

FIG. 14

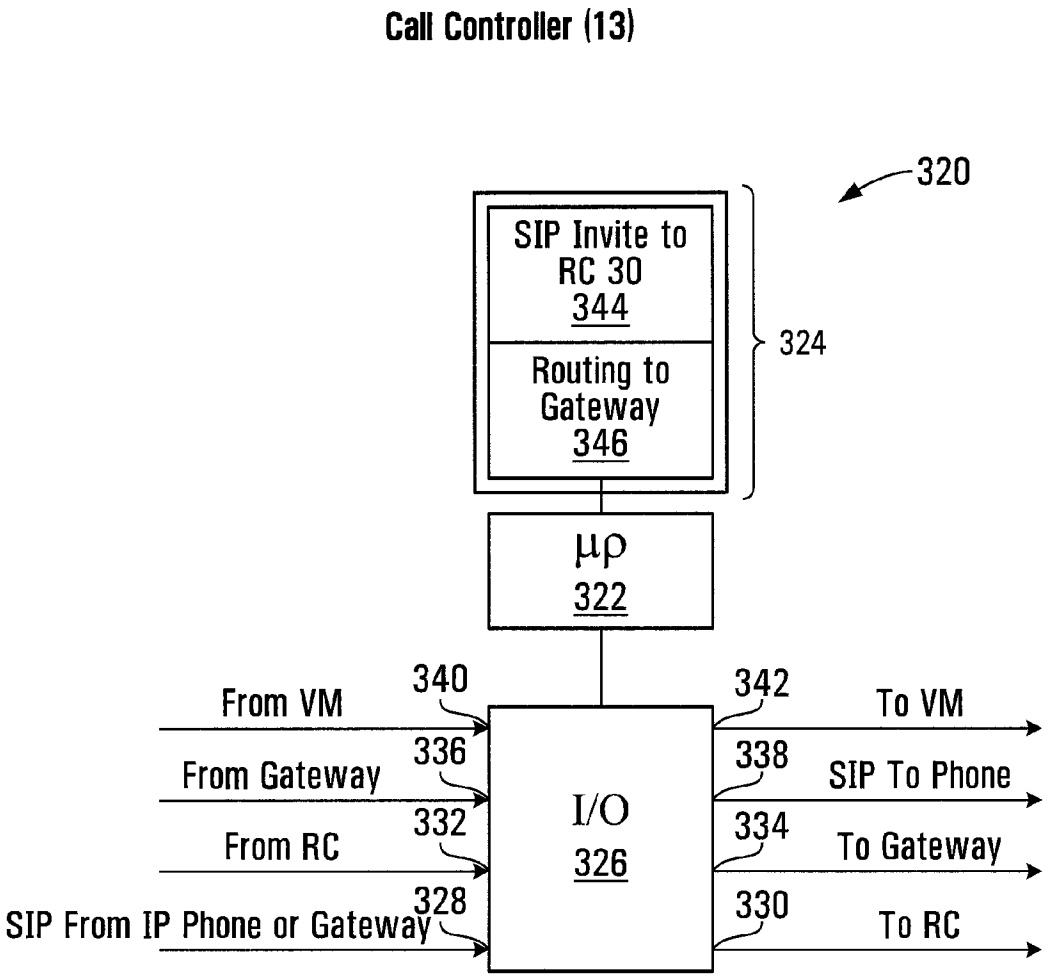
Call Controller (13)
320
SIP Invite to RC 30
344
Routing to Gateway
346
324
μρ
322
340
From VM
336
From Gateway
332
From RC
328
SIP From IP Phone or Gateway
I/O
326
342
To VM
338
SIP To Phone
334
To Gateway
330
To RC

FIG. 15

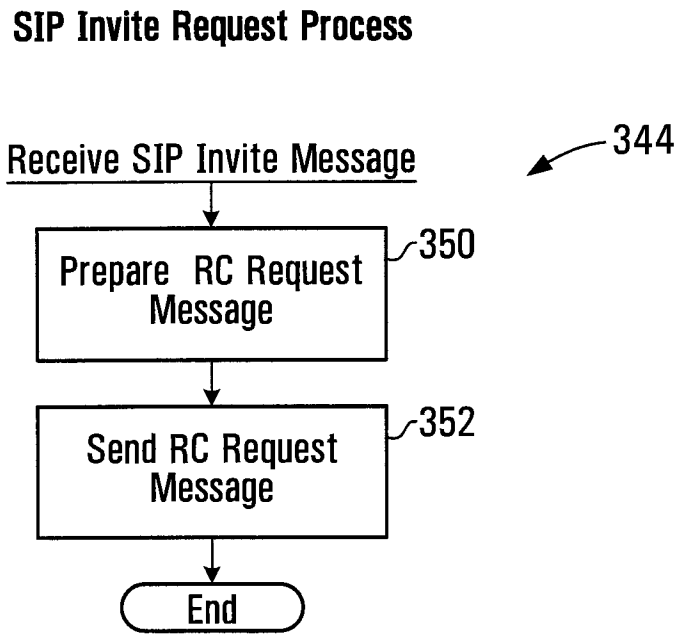

FIG. 16

360

RC Request Message

362	Caller	1-604-678-1234@20.14.102.5
364	Callee	1-604-345-1212
366	Digest	XXXXXXX
368	Call ID	FF10@20.14.102.5

FIG. 17

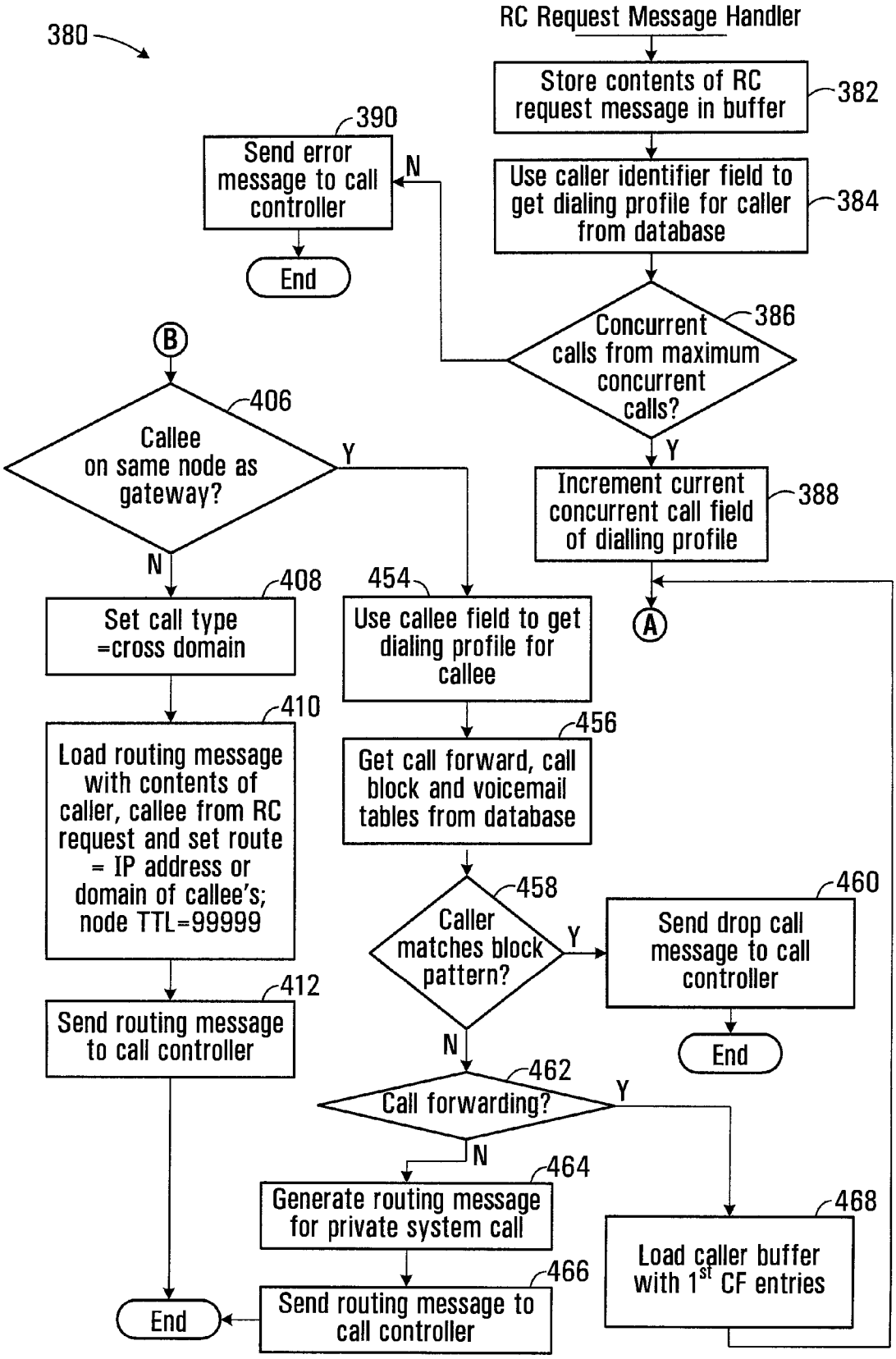
380
RC Request Message Handler
Store contents of RC request message in buffer
382
Use caller identifier field to get dialing profile for caller from database
384
Concurrent calls from maximum concurrent calls?
386
N
Y
Send error message to call controller
390
End
Increment current concurrent call field of dialling profile
388
A
B
Callee on same node as gateway?
406
Y
N
Set call type =cross domain
408
Load routing message with contents of caller, callee from RC request and set route = IP address or domain of callee's; node TTL=99999
410
Send routing message to call controller
412
End
Use callee field to get dialing profile for callee
454
Get call forward, call block and voicemail tables from database
456
Caller matches block pattern?
458
Y
N
Send drop call message to call controller
460
End
Call forwarding?
462
Y
N
Generate routing message for private system call
464
Send routing message to call controller
466
End
Load caller buffer with 1st CF entries
468

FIG. 18A

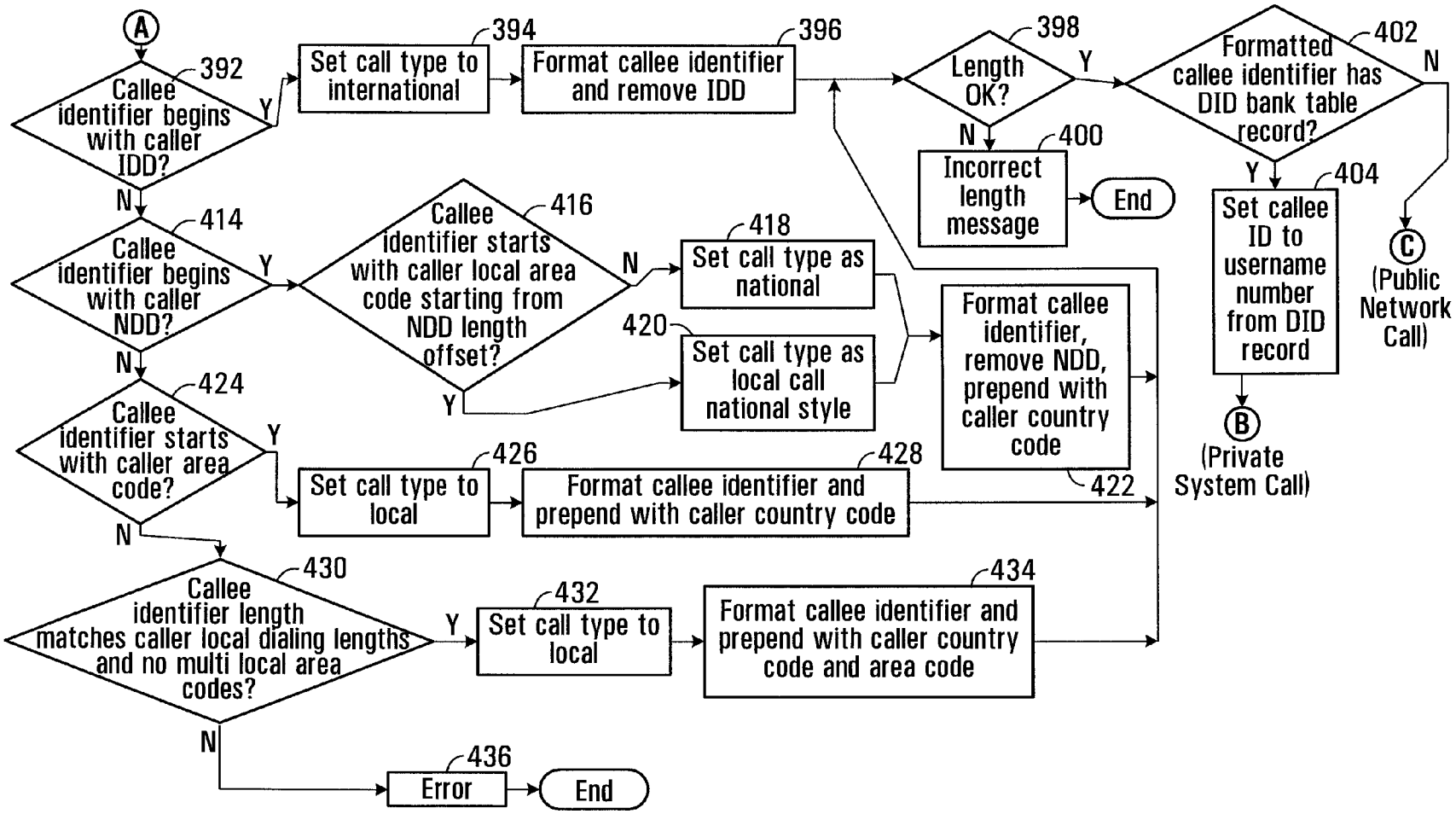
A
392
Callee identifier begins with caller IDD?
Y
N
394
Set call type to international
396
Format callee identifier and remove IDD
398
Length OK?
Y
N
400
Incorrect length message
End
402
Formatted callee identifier has DID bank table record?
N
Y
404
Set callee ID to username number from DID record
B
(Private System Call)
C
(Public Network Call)
414
Callee identifier begins with caller NDD?
Y
N
416
Callee identifier starts with caller local area code starting from NDD length offset?
N
Y
418
Set call type as national
420
Set call type as local call national style
Format callee identifier, remove NDD, prepend with caller country code
422
424
Callee identifier starts with caller area code?
Y
N
426
Set call type to local
428
Format callee identifier and prepend with caller country code
430
Callee identifier length matches caller local dialing lengths and no multi local area codes?
Y
N
432
Set call type to local
434
Format callee identifier and prepend with caller country code and area code
436
Error
End

FIG. 18B

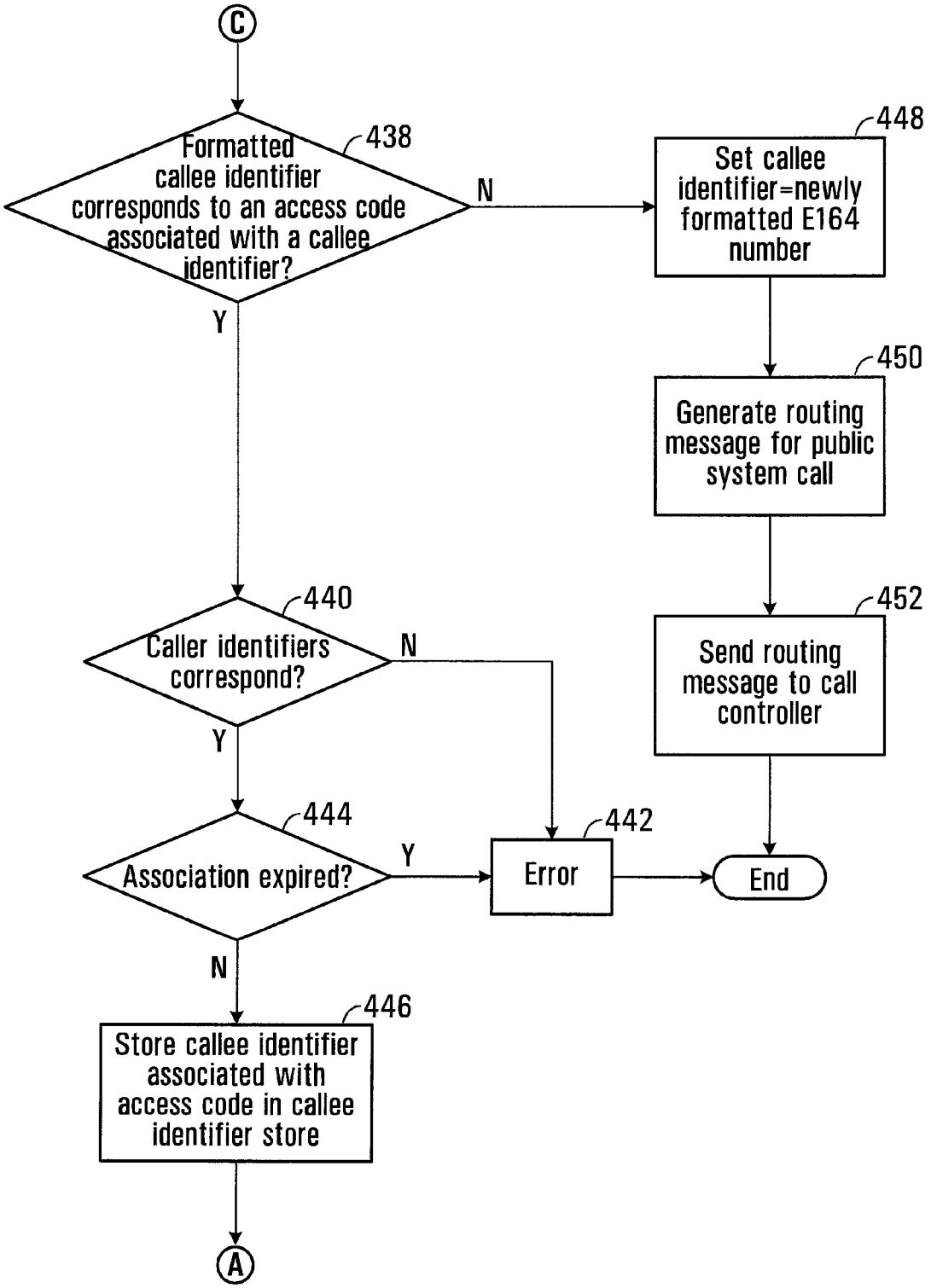
C
Formatted callee identifier corresponds to an access code associated with a callee identifier?
438
N
Y
Set callee identifier=newly formatted E164 number
448
Generate routing message for public system call
450
Send routing message to call controller
452
Caller identifiers correspond?
440
N
Y
Association expired?
444
Y
N
Error
442
End
Store callee identifier associated with access code in callee identifier store
446
A

FIG. 18C

480

Gateway Node Association Table

	486 Gateway IP Address	488 Node Identifier
482	20.14.102.5	2
484	104.12.131.12	5

FIG. 19

MOBILE GATEWAY

This application is a national phase entry of PCT/CA2009/001062, filed Jul. 28, 2009, which claims priority to U.S. Provisional Application No. 61/129,898, filed Jul. 28, 2008, both of which are incorporated by reference in their entirety.

BACKGROUND OF THE INVENTION

1. Field of Invention

This invention relates generally to telecommunication, and more particularly to methods, systems, apparatuses, and computer readable media for initiating or enabling a call with a mobile telephone to a callee.

2. Description of Related Art

Mobile telephone service providers often charge significant fees for long distance telephone calls, particularly when the mobile telephone is roaming in another mobile telephone service provider's network.

One known technique for avoiding the long distance charges of mobile telephone service providers is to use a "calling card". A "calling card" may permit the user of the mobile telephone to place a call to a local telephone number or to a less-expensive telephone number (such as a toll-free number, for example) instead of placing the call directly to the callee. The user may thus avoid the long distance charges of the mobile telephone service provider, which may be higher than the charges for using the "calling card". However, this technique can be cumbersome and undesirable, because it may require the user of the mobile telephone to follow a number of complicated or cumbersome steps in order to initiate a call to the callee, for example.

SUMMARY OF THE INVENTION

In accordance with one aspect of the invention there is provided a method of initiating a call to a callee using a mobile telephone. The method involves receiving, from a user of the mobile telephone, a callee identifier associated with the callee; transmitting an access code request message to an access server, the access code request message including the callee identifier; receiving an access code reply message from the access server in response to the access code request message, the access code reply message including an access code different from the callee identifier and associated with the callee identifier; and initiating a call with the mobile telephone using the access code to identify the callee.

Transmitting may involve transmitting the access code request message to the access server on a non-voice network.

Transmitting may involve transmitting a location identifier of a location associated with the mobile telephone to the access server.

Transmitting the location identifier may involve transmitting an IP address of the mobile telephone in a wireless IP network.

Transmitting the location identifier may involve transmitting an identifier of a wireless voice signal station in wireless communication with the mobile telephone.

Transmitting the location identifier may involve transmitting a user-configured identifier of a location associated with the mobile telephone.

Receiving the access code reply message may involve receiving the access code reply message from the access server on a non-voice network.

Receiving the access code reply message may involve receiving, in the access code reply message, an access code temporarily associated with the callee identifier.

Receiving the access code reply message may involve receiving, in the access code reply message, a telephone number identifying a channel operably configured to cooperate with an IP network to cause a call involving the mobile telephone and the callee to be routed through the IP network.

Initiating the call may involve engaging a routing controller to route the call on the IP network to the callee.

The method may further involve: receiving from the mobile telephone the access code request message; communicating with a routing controller to obtain from the routing controller the access code wherein the access code identifies a channel and is useable by the mobile telephone to cause the routing controller to establish a call to the callee using the channel; and transmitting the access code reply message to the mobile telephone.

In accordance with another aspect of the invention, there is provided a mobile telephone. The mobile telephone includes: provisions for receiving, from a user of the mobile telephone, a callee identifier associated with the callee; transmitting provisions for transmitting an access code request message to an access server, the access code request message including the callee identifier; provisions for receiving an access code reply message from the access server in response to the access code request message, the access code reply message including an access code different from the callee identifier and associated with the callee identifier; and provisions for initiating a call using the access code to identify the callee.

The transmitting provisions may include a non-voice network interface for transmitting the access code request message to the access server on a non-voice network.

The access code request message may further include a location identifier of a location associated with the mobile telephone.

The location identifier may include an IP address of the mobile telephone in a wireless IP network.

The location identifier may include an identifier of a wireless voice signal station in wireless communication with the mobile telephone.

The location identifier may include a user-configured identifier of a location associated with the mobile telephone.

The provisions for receiving an access code reply message may include a non-voice network interface for receiving the access code reply message on a non-voice network.

The access code may include a telephone number.

The means for initiating may involve a mobile telephone network interface.

In accordance with another aspect of the invention, there is provided a system for initiating a call to a callee. The system includes the mobile telephone, a routing controller, and an access server. The access server includes: provisions for receiving from the mobile telephone the access code request message; provisions for communicating with the routing controller to obtain from the routing controller the access code wherein the access code identifies a channel and is useable by the mobile telephone to cause the routing controller to establish a call to the callee using the channel; and provisions for transmitting the access code reply message including the access code to the mobile telephone.

In accordance with another aspect of the invention, there is provided a mobile telephone. The mobile telephone includes a processor circuit, a network interface in communication with the processor circuit, and a computer readable medium in communication with the processor circuit and encoded with codes for directing the processor circuit to: receive, from a user of the mobile telephone, a callee identifier associated with the callee; cause an access code request message to be transmitted to an access server, the access code request mes-

T-Mobile Exhibit 1001

sage including the callee identifier; receive an access code reply message from the access server in response to the access code request message, the access code reply message including an access code different from the callee identifier and associated with the callee identifier; and initiate a call using the access code to identify the callee.

The network interface may include a non-voice network interface, and the codes for directing the processor circuit to cause the access code request message to be transmitted may include codes for directing the processor circuit to cause the access code request message to be transmitted to the access server using the non-voice network interface on a non-voice network.

The access code request message may further include a location identifier of a location associated with the mobile telephone.

The location identifier may include an IP address of the mobile telephone in a wireless IP network.

The location identifier may include an identifier of a wireless voice signal station in wireless communication with the mobile telephone.

The location identifier may include a user-configured identifier of a location associated with the mobile telephone.

The network interface may include a non-voice network interface, and the codes for directing the processor circuit to receive an access code reply message may include codes for directing the processor circuit to cause the access code reply message to be received from the access server using the non-voice network interface on a non-voice network.

The access code may include a telephone number identifying a channel operably configured to cooperate with an IP network to cause a call involving the mobile telephone and the callee to be routed through the IP network.

The network interface may include a mobile telephone network interface, and the codes for directing the processor circuit to initiate may include codes for directing the processor circuit to cause a call to be initiated using the mobile telephone network interface on a mobile telephone network.

In accordance with another aspect of the invention, there is provided a system for initiating a call to a callee. The system includes: the mobile telephone; a routing controller; and an access server comprising a processor circuit and a computer readable medium in communication with the processor circuit. The computer readable medium is encoded with codes for directing the processor circuit to: receive from the mobile telephone the access code request message; communicate with the routing controller to obtain from the routing controller the access code wherein the access code identifies a channel and is useable by the mobile telephone to cause the routing controller to establish a call to the callee using the channel; and transmit the access code reply message to the mobile telephone.

In accordance with another aspect of the invention, there is provided a computer readable medium encoded with codes for directing a processor circuit to: receive, from a user of a mobile telephone, a callee identifier associated with a callee; transmit an access code request message to an access server, the access code request message including the callee identifier; receive an access code reply message from the access server in response to the access code request message, the access code reply message including an access code different from the callee identifier and associated with the callee identifier; and initiate a call using the access code to identify the callee.

In accordance with another aspect of the invention, there is provided a method for enabling a mobile telephone to initiate a call to a callee through a channel. The method involves: receiving from the mobile telephone an access code request message including a callee identifier associated with the callee; communicating with a routing controller to obtain from the routing controller an access code identifying the channel, the access code being different from the callee identifier and useable by the mobile telephone to initiate a call to the callee using the channel; and transmitting an access code reply message including the access code to the mobile telephone.

Receiving may involve receiving the access code request message on a non-voice network.

The method may further involve causing the routing controller to produce the access code.

Producing may involve selecting the access code from a pool of access codes, where each access code in the pool of access codes identifies a respective telephone number.

The method may further involve determining a local calling area associated with the mobile telephone.

Determining may involve accessing a dialing profile associated with the caller, the dialing profile including a location field having contents identifying at least a default location of the caller.

Determining may involve receiving an IP address of the mobile telephone in a wireless IP network.

Determining may involve receiving an identifier of a wireless voice signal station in wireless communication with the mobile telephone.

Determining may involve receiving a user-configured identifier of a location associated with the mobile telephone.

Selecting may involve selecting an access code in the local calling area associated with the mobile telephone.

Each access code in the pool of access codes may further identify a respective channel operably configured to cooperate with an IP network to cause a call involving the mobile telephone and the callee to be routed through the IP network.

The method may further involve causing the routing controller to establish communication through the IP network in response to a call received on the channel.

Producing may further involve storing a caller identifier associated with the mobile telephone in association with the access code.

Causing the routing controller to establish communication may involve causing the routing controller to establish communication only if the caller identifier associated with the access code identifies the mobile telephone.

Producing may further involve storing the callee identifier in association with the access code.

Producing may further involve searching the pool of access codes for an access code associated with the callee identifier to identify the channel usable by the mobile telephone to initiate a call to the callee.

Producing may further involve storing, in association with the access code, a timestamp for use in determining when the usability of the access code to initiate a call to the callee will expire.

Causing the routing controller to establish communication may involve causing the routing controller to establish communication only if the usability of the access code to initiate a call to the callee has not expired.

Transmitting may involve transmitting the access code reply message on a non-voice network.

In accordance with another aspect of the invention, there is provided a system for enabling a mobile telephone to initiate a call to a callee through a channel. The system includes: provisions for receiving from the mobile telephone an access code request message including a callee identifier associated with the callee; provisions for communicating with the rout-

ing controller to obtain from the routing controller an access code identifying the channel, the access code being different from the callee identifier and useable by the mobile telephone to initiate a call to the callee using the channel; and provisions for transmitting an access code reply message including the access code to the mobile telephone.

The provisions for receiving may include a non-voice network interface for receiving the access code request message on a non-voice network.

The system may further include provisions for producing the access code.

The provisions for producing may include a processor circuit operably configured to select the access code from a pool of access codes, where each access code in the pool of access codes identifies a respective telephone number.

The processor circuit may be operably configured to determine a local calling area associated with the mobile telephone.

The processor circuit may be operably configured to determine a local calling area associated with the mobile telephone using a dialing profile associated with the caller, the dialing profile including a location field having contents identifying at least a default location of the caller.

The processor circuit may be operably configured to determine a local calling area associated with the mobile telephone using an IP address of the mobile telephone in a wireless IP network.

The processor circuit may be operably configured to determine a local calling area associated with the mobile telephone using an identifier of a wireless voice signal station in wireless communication with the mobile telephone.

The processor circuit may be operably configured to determine a local calling area associated with the mobile telephone using a user-configured identifier of a location associated with the mobile telephone.

The processor circuit may be operably configured to select an access code in the local calling area associated with the mobile telephone.

Each access code in the pool of access codes may further identify a respective channel operably configured to cooperate with an IP network to cause a call involving the mobile telephone and the callee to be routed through the IP network.

The processor circuit may be operably configured to establish communication through the IP network in response to a call received on the channel.

The processor circuit may be operably configured to store a caller identifier associated with the mobile telephone in association with the access code.

The processor circuit may be operably configured to cause the routing controller to establish communication only if the caller identifier associated with the access code identifies the mobile telephone.

The processor circuit may be operably configured to store the callee identifier in association with the access code.

The processor circuit may be operably configured to search the pool of access codes for an access code associated with the callee identifier to identify the channel usable by the mobile telephone to initiate a call to the callee.

The processor circuit may be operably configured to store, in association with the access code, a timestamp for use in determining when the usability of the access code to initiate a call to the callee will expire.

The processor circuit may operably configured to establish communication only if the usability of the access code to initiate a call to the callee has not expired.

The provisions for transmitting may include a non-voice network interface for transmitting the access code reply message on a non-voice network.

In accordance with another aspect of the invention, there is provided a system for enabling a mobile telephone to initiate a call to a callee through a channel. The system includes a processor circuit, a network interface in communication with the processor circuit, and a computer readable medium in communication with the processor circuit and encoded with codes for directing the processor circuit to: receive from the mobile telephone an access code request message including a callee identifier associated with the callee; communicate with the routing controller to obtain from the routing controller an access code identifying the channel, the access code being different from the callee identifier and useable by the mobile telephone to initiate a call to the callee using the channel; and cause an access code reply message including the access code to be transmitted to the mobile telephone.

The network interface may include a non-voice network interface, and the codes for directing the processor circuit to receive may include codes for directing the processor circuit to cause the access code request message to be received using the non-voice network interface on a non-voice network.

The computer readable medium may be further encoded with codes for directing the processor circuit to cause the access code to be produced.

The codes for directing the processor circuit to cause the access code to be produced may cause the access code to be selected from a pool of access codes, where each access code in the pool of access codes identifies a respective telephone number.

The computer readable medium may be further encoded with codes for directing the processor circuit to cause to be determined a local calling area associated with the mobile telephone.

The codes for directing the processor circuit to cause to be determined may cause a dialing profile associated with the caller to be accessed, the dialing profile including a location field having contents identifying at least a default location of the caller.

The codes for directing the processor circuit to cause to be determined may cause to be received an IP address of the mobile telephone in a wireless IP network.

The codes for directing the processor circuit to cause to be determined may cause to be received an identifier of a wireless voice signal station in wireless communication with the mobile telephone.

The codes for directing the processor circuit to cause to be determined may cause to be received a user-configured identifier of a location associated with the mobile telephone.

The codes for directing the processor circuit to cause the access code to be produced may further cause to be selected an access code in the local calling area associated with the mobile telephone.

Each access code in the pool of access codes may further identify a respective channel operably configured to cooperate with an IP network to cause a call involving the mobile telephone and the callee to be routed through the IP network.

The computer readable medium may be further encoded with codes for directing the processor circuit to cause communication through the IP network to be established in response to a call received on the channel.

The codes for directing the processor circuit to cause the access code to be produced may cause a caller identifier associated with the mobile telephone to be stored in association with the access code.

The codes for directing the processor circuit to cause communication to be established may cause communication to be established only if the caller identifier associated with the access code identifies the mobile telephone.

The codes for directing the processor circuit to cause the access code to be produced may cause the callee identifier to be stored in association with the access code.

The codes for directing the processor circuit to cause the access code to be produced may cause the pool of access codes to be searched for an access code associated with the callee identifier to identify the channel usable by the mobile telephone to initiate a call to the callee.

The codes for directing the processor circuit to cause the access code to be produced may cause a timestamp for use in determining when the usability of the access code to initiate a call to the callee will expire, to be stored in association with the access code.

The codes for directing the processor circuit to cause communication to be established may cause communication to be established only if the usability of the access code to initiate a call to the callee has not expired.

The network interface may include a non-voice network interface, and the codes for directing the processor circuit to transmit include codes for directing the processor circuit to cause the access code reply message to be transmitted using the non-voice network interface on a non-voice network.

In accordance with another aspect of the invention, there is provided a computer readable medium encoded with codes for directing a processor circuit to: receive from the mobile telephone an access code request message including a callee identifier associated with the callee; communicate with the routing controller to obtain from the routing controller an access code identifying the channel, the access code being different from the callee identifier and useable by the mobile telephone to initiate a call to the callee using the channel; and cause an access code reply message including the access code to be transmitted to the mobile telephone.

Other aspects and features of the present invention will become apparent to those ordinarily skilled in the art upon review of the following description of specific embodiments of the invention in conjunction with the accompanying figures.

BRIEF DESCRIPTION OF THE DRAWINGS

In drawings which illustrate embodiments of the invention,

FIG. **1** is a block diagram of a system for enabling a mobile telephone to initiate a call through a channel to a callee in accordance with a first embodiment in the invention;

FIG. **2** is a block diagram of mobile telephone shown in FIG. **1**;

FIG. **3** is a flow chart of a process executed by the mobile telephone shown in FIG. **1**;

FIG. **4** is a schematic representation of an access code request message transmitted between the mobile telephone and an access server shown in FIG. **1**;

FIG. **5** is a schematic representation of an access code reply message transmitted between the mobile telephone and the access server shown in FIG. **1**;

FIG. **6** is a block diagram of the access server shown in FIG. **1**;

FIG. **7** is a flow chart of a process executed by the access server shown in FIG. **1**;

FIG. **8** is a block diagram of a routing controller shown in FIG. **1**;

FIG. **9** is a tabular representation of a dialing profile stored in a database accessible by the routing controller illustrated in FIG. **1**;

FIG. **10** is a tabular representation of an access code association table stored in memory accessible by the routing controller shown in FIG. **1**;

FIG. **11** is a schematic representation of a DID bank table record stored in a database shown in FIG. **1**;

FIG. **12** is a flow chart of a process executed by the routing controller illustrated in FIG. **1**;

FIG. **13** is a block diagram of a gateway shown in FIG. **1**;

FIG. **14** is a tabular representation of an SIP invite message transmitted between the gateway and a call controller illustrated in FIG. **1**;

FIG. **15** is a block diagram of the call controller illustrated in FIG. **1**;

FIG. **16** is a flow chart of a process executed by the call controller illustrated in FIG. **1**;

FIG. **17** is a tabular representation of an RC request message transmitted between the call controller and the routing controller illustrated in FIG. **1**

FIGS. **18**A-**18**C are a flow chart of a process executed by the routing controller illustrated in FIG. **1**; and

FIG. **19** is a tabular representation of a gateway node association table stored in the database illustrated in FIG. **1**.

DETAILED DESCRIPTION

Referring to FIG. **1**, a system for enabling a mobile telephone to initiate a call to a callee is shown generally at **10**. The system **10** includes a first node **11**, a second node **21**, and a mobile telephone **12**.

The first and second nodes **11** and **21** in the illustrated embodiment may support "voice-over-IP" (VoIP) calls between telephones and/or videophones using the Internet protocol (IP), as described in PCT Publication No. WO 2008/052340, which is hereby incorporated by reference in its entirety herein. In the embodiment shown, the first node **11** is located in a geographical area, such as Vancouver, British Columbia, Canada, for example, and the second node **21** is located in London, England, for example. Different nodes may be located in different geographical regions throughout the world to provide telephone/videophone service to subscribers in respective regions. These nodes may be in communication with each other by high speed/high data throughput links including optical fiber, satellite, and/or cable links illustrated generally at **17**, forming a backbone to the system. These nodes may alternatively, or in addition, be in communication with each other through conventional internet services.

In the embodiment shown, the first node **11** provides telephone/videophone service to western Canadian customers from Vancouver Island to Ontario. Another node (not shown) may be located in Eastern Canada to provide services to subscribers in that area, for example.

Other nodes of the type shown may also be employed within the geographical area serviced by a node to provide for call load sharing, for example, within a region of the geographical area serviced by the node. However, in general, all nodes may be similar and have the properties described in connection with the first node **11**.

In this embodiment, the first node **11** includes a call controller (CC) **13**, an access server **14**, a routing controller (RC) **30**, a database **23**, a voicemail server **19**, and a media relay **28**. Each of these may be implemented as separate modules on a common computer system or by separate computers, for example. The voicemail server **19** need not be included in the

T-Mobile Exhibit 1001

node and can be provided by a third party service provider. Although the access server **14** is illustrated as being part of the first node **11**, access servers in alternative embodiments may be separate from the node and may be in communication with one or more nodes, for example.

The mobile telephone **12** is configured to place calls over a mobile telephone network, illustrated generally at **15**, in a manner well-known in the art. Furthermore, the mobile telephone **12** and the access server **14** are configured to communicate with each other, preferably on a non-voice network illustrated generally at **16**, such as a "WiFi" wireless IP network or a General Packet Radio Service (GPRS) network, for example. However, in alternative embodiments, the mobile telephone **12** and the access server **14** may communicate with each other over other networks, such as a mobile telephone network using Short Message Service (SMS) messages, for example.

The system **10** further includes a gateway **18** in communication with at least one, and preferably a plurality of, channels, which are illustrated schematically at **20**, **22**, and **24**, to which the mobile telephone **12** may initiate a call over the mobile telephone network **15**. The channels **20**, **22**, and **24** maybe telephone lines in a Public Switched Telephone Network (PSTN) **29**. The channels **20**, **22**, and **24** maybe associated with PSTN telephone numbers in a local calling area associated with the mobile telephone **12**, and thus these channels preferably depend on a geographical location of the mobile telephone. The expression "local calling area" herein refers generally to a set of telephone numbers, typically defined by a geographical region, to which telephone calls may be placed by callers within the local calling area at either no additional charge or at a lower additional charge than would be required for calls to numbers that are outside of the local calling area. However, it will be appreciated that in other embodiments, the gateway **18** may be in communication with any number of channels, which need not be PSTN telephone lines. Also, in the illustrated embodiment, the channels **20**, **22**, and **24** are associated with telephone numbers for Vancouver, British Columbia, Canada and the surrounding area, although it will be appreciated that these channels may include PSTN telephone lines associated with other areas, for example, which may not necessarily be in a local calling area associated with the mobile telephone **12**.

In the illustrated embodiment, each of the channels **20**, **22**, and **24** is configured by a PSTN service provider (which, in Canada, may be Bell Canada or Telus, for example) to direct calls that are received on the channels to the gateway **18**. In the illustrated embodiment, the PSTN service provider has configured the channels **20**, **22**, and **24** to communicate with a T1 multiplexer **25**, which multiplexes the channels **20**, **22**, and **24** in a manner known in the art onto one or more T1 lines **27** that are in communication with the gateway **18**. The gateway **18** is in communication with an IP network shown generally at **26**. The channels **20**, **22**, and **24** are thus configured to cooperate with the IP network **26** (via the gateway **18** in the illustrated embodiment) to cause a call involving the mobile telephone **12** and the callee to be routed through the IP network in response to a call received at one of the channels.

Also, in the illustrated embodiment, the access server **14** is in communication with the routing controller **30** of the first node **11**, and the routing controller **30** is configurable to associate a callee identifier with one of the channels **20**, **22**, and **24**, as described below. A callee identifier associated with one of the channels **20**, **22**, and **24** may be a telephone number of a PSTN telephone **32** that is in communication with the IP network **26** through a gateway **34**, or it may be a telephone number of a VoIP telephone **36** that is directly in communication with the IP network **26**, for example. Other routing controllers **30** of other nodes, such as the second node **21**, for example, may also associate callee identifiers with other channels that are in communication with other gateways (not shown).

Mobile Telephone

Referring to FIG. **2**, in this embodiment, the mobile telephone (**12**) includes a processor circuit shown generally at **50**. The processor circuit **50** includes a microprocessor **52**, a program memory **54**, an input/output (I/O) port **56**, parameter memory **58**, and temporary memory **60**. The program memory **54**, I/O port **56**, parameter memory **58**, and temporary memory **60** are all in communication with the microprocessor **52**. The processor circuit **50** may alternatively include a plurality of processors, a plurality of program memories, a plurality of temporary memories, and/or a plurality of I/O ports, or these components may alternatively be combined into a single device. However, for simplicity, the components of the processor circuit **50** are illustrated as shown in the example of FIG. **2**.

In the illustrated embodiment, the I/O port **56** includes a dialing input **62** for receiving a callee identifier from a key pad, for example, or from a voice recognition unit, or from pre-stored callee identifiers stored in the parameter memory **58**, for example. For illustration purposes only, a myriad of possible dialing functions for providing a callee identifier are represented by the block entitled dialing function **64**. A callee identifier may be a telephone number of a callee, for example.

The I/O port **56** also includes a handset interface **66** for receiving and producing signals to and from a handset **68** that may be placed close to the user's ear and mouth, for producing and receiving audible signals for and from the user. It will be appreciated that alternatively, the handset **68** may include a camera and video screen, for example, and that video or other types of signals may be transmitted additionally or alternatively to audible signals.

The I/O port **56** also includes a non-voice network interface **70** for transmitting information to, and receiving information from, the non-voice network **16** illustrated in FIG. **1**, for example, and preferably interfaces with a high-speed internet connection.

The I/O port **56** in the illustrated embodiment further includes a mobile telephone network interface **72** for transmitting signals to and receiving signals from a mobile telephone service provider over a network such as a Global System for Mobile communications (GSM) or a Code Division Multiple Access (CDMA) network, such as the mobile telephone network **15** illustrated in FIG. **1**, for example. Again, for simplicity, a mobile telephone network interface is illustrated, although it will be appreciated that video signals or other signals may be handled similarly when the mobile telephone (**12**) is facilitating communication of one or more of these types of signals. It will also be appreciated that alternatively, the non-voice network interface **70** and mobile telephone network interface **72** need not be distinct, but may be a single interface for communication over a single network, for example, or may be configured to communicate over a plurality of different networks, for example.

In the illustrated embodiment, the parameter memory **58** includes a username field **74** and a password field **76**, although it will be appreciated that the username and password may not be necessary, or may be input by the user as required, for example. The parameter memory **58** in the illustrated embodiment also includes a caller identifier field **78** for storing a caller identifier, which may be a telephone number associated with the mobile telephone (**12**) for identifying a "channel" such as a telephone line assigned to the mobile

T-Mobile Exhibit 1001

telephone that may be used to call back to the mobile telephone, for example. Generally, the contents of the username field **74**, the password field **76**, and the caller identifier field **78** are set once when the user first subscribes to the system.

The usernames referred to herein, such as the username in the username field **74**, preferably include a twelve digit number such as 2001 1050 8667, for example, wherein the left-most digit is a continent code (such as "2" to indicate North America, for example), followed by a three-digit country code (such as "001" to indicate Canada and the United States, for example), a four-digit dealer code (such as "1050", for example), and a unique four-digit number code (such as "8667", for example), as discussed more generally in PCT Publication No. 2008/052340. Therefore, a prefix of a username referred to herein preferably indicates a geographical region associated with the user, or with the access code, and more preferably indicates a node associated with the user or access code.

The program memory **54** stores blocks of codes for directing the microprocessor **52** to carry out the functions of the mobile telephone (**12**), which are illustrated by example below.

Referring to FIGS. **2** and **3**, a flow chart representing functions performed by blocks of code that direct the microprocessor **52** to initiate a call with the mobile telephone **12** to a callee is shown generally at **100**. The blocks shown in FIG. **3** generally represent codes that may be stored in the program memory **54** for example, for directing the microprocessor **52** to perform various functions relating to initiating a call with the mobile telephone (**12**) to a callee. The actual code to implement each block may be written in any suitable programming language, such as Java, C, and/or C++, for example.

The process **100** begins at **102**, in response to an interrupt produced at or for the microprocessor **52** by the dialing function **64**. Upon initiation of the process **100**, block **104** directs the microprocessor **52** to obtain a callee identifier from the dialing function **64** at the dialing input **62** of the I/O port **56** in the illustrated embodiment. The callee identifier is associated with a desired callee, and may be a telephone number of the callee, for example. The microprocessor **52** thus receives, from a user of the mobile telephone (**12**), a callee identifier associated with a callee.

Block **106** directs the microprocessor **52** to transmit, using the non-voice network interface **70** in the illustrated embodiment, an access code request message, the access code request message including the callee identifier obtained at block **104**, to the access server **14** (illustrated in FIG. **1**). In general, preferably block **106** directs the microprocessor **52** to cause an access code request message to be transmitted to the access server **14** over a non-voice network, such as an internet, using WiFi or GPRS technology for example. However, it will be appreciated that block **106** may direct the microprocessor **52** to transmit an access code request message to the access server **14** using any suitable technique, which may alternatively include a voice network, for example.

Referring to FIG. **4**, an exemplary access code request message is shown generally at **110**. The access code request message **110** includes a username field **112**, a password field **114**, a callee identifier field **116**, and a caller identifier field **118**. In the illustrated embodiment, values for the username, password, and caller identifier fields **112**, **114**, and **118** are retrieved from the username, password, and caller identifier fields **74**, **76**, and **78** respectively in the parameter memory **58** of the processor circuit **50** (illustrated in FIG. **2**), and a value for the callee identifier field **116** is obtained from the dialing function **64** in block **104**, and may be stored in the temporary memory (**60**), for example. It will be appreciated that the username field **112**, password field **114**, and caller identifier field **118** are not essential, although these fields are preferable in order to identify the user of the mobile telephone for billing purposes, for example.

Referring to FIGS. **1** and **4**, it will be appreciated that in order to minimize charges from the mobile telephone service provider of the mobile telephone **12**, the channels **20**, **22**, **24** will preferably be local or relatively inexpensive telephone lines associated with a geographical location, more particularly a pre-defined local calling area, associated with the mobile telephone **12**. Therefore, the exemplary access code request message **110** further includes a location identifier field **119**. The location identifier stored in the location identifier field **119** preferably identifies a location of the mobile telephone **12** for use in determining a local calling area associated with the mobile telephone **12**.

For example, the location identifier in the location identifier field **119** may include an IP address of the mobile telephone **12** in a wireless IP network, such as the non-voice network **16** to which the non-voice network interface **70** shown in FIG. **2** is connected, because this IP address may be an indicator of a geographical location of the mobile telephone **12**. The location identifier may also or alternatively include an identifier of a wireless voice signal station in wireless communication with the mobile telephone. In the illustrated embodiment, the wireless voice signal station is part of the mobile telephone network **15** that is in communication with the mobile telephone **12** through the mobile telephone network interface **72** illustrated in FIG. **2**. In still other embodiments, the location identifier may include a user-configured identifier of a geographical location or local calling area where the mobile telephone **12** is or may be situated. The location identifier may thus be pre-determined and stored in the parameter memory **58** shown in FIG. **2** or may be acquired from non-voice network or wireless voice signal station or from user input, for example. Therefore, in summary, the location identifier in the location identifier field **119** may include one or more of an IP address of the mobile telephone **12** in a wireless IP network, an identifier of a wireless voice signal station in wireless communication with the mobile telephone, and a user-configured identifier.

As described below, the location identifier in the location identifier field **119** may be used to determine a local calling area associated with the mobile telephone **12**, within which local calling area channels (illustrated as **20**, **22**, and **24** in FIG. **1**) are available to the mobile telephone **12** for the lowest cost to the user. However, it will be appreciated that the location identifier may only approximately identify a local calling area, and may not necessarily identify the lowest cost channel (illustrated as **20**, **22**, and **24** in FIG. **1**) for the mobile telephone **12**. It will also be appreciated that in other embodiments, the location identifier field **119** may be omitted.

Referring back to FIG. **3**, the process **100** continues at block **130**, which directs the microprocessor (**52**) to receive an access code reply message from the access server (**14**) in response to the access code request message that was transmitted at block **106**.

Referring to FIG. **5**, an exemplary access code reply message is shown generally at **140**. The access code reply message **140** includes an access code field **142** and a timeout field **144**. In the illustrated embodiment, the access code field **142** stores an access code which is a telephone number associated with a telephone line associated with one of the channels **20**, **22**, or **24** in FIG. **1**. It will be appreciated that the access code is different from the callee identifier in the callee identifier

field **116** shown in FIG. **4**, in that the access code identifies a channel, other than that provided by the callee identifier provided by the dialing function **64** in FIG. **2**, that the mobile telephone (**12**) can use to initiate a call to the callee. It will be appreciated that use of the access code facilitates avoidance of long distance or roaming charges that a mobile telephone service provider would charge for a call placed directly using the callee identifier using conventional calling processes, for example.

Still referring to FIG. **5**, the timeout field **144** in the illustrated embodiment stores a value that indicates a period of time, for example a number of minutes, during which the access code in the access code field **142** is associated with the callee identifier in the callee identifier field **116** of the exemplary access code request message **110** illustrated in FIG. **4**, such that the access code is only temporarily associated with the callee identifier. In one embodiment, the value stored in the timeout field **144** indicates 10 minutes, for example. It will be appreciated that in other embodiments, the timeout field **144** may not be necessary, but preferably it is included.

In the illustrated embodiment, the program codes in block **130** direct the microprocessor **52** to receive the access code reply message over a non-voice network, such as a WiFi or GPRS network (illustrated at **16** in FIG. **1**) via the non-voice network interface **70** shown in FIG. **2**. However, it will be appreciated that the access code reply message may be received on any suitable network, even a voice network, for example.

Referring back to FIGS. **2** and **3**, block **149** directs the microprocessor **52** to initiate a call with the mobile telephone (**12**) on the mobile telephone network **15** (illustrated in FIG. **1**) using the access code received in the access code field **142** of the access code reply message **140** (shown in FIG. **5**) to identify the callee. In the illustrated embodiment, the codes in block **149** direct the microprocessor **52** to initiate a call to the channel (**20**, **22**, or **24**) identified by the access code, using the mobile telephone network interface **72** of the I/O port **56** of the mobile telephone (**12**), to engage the mobile telephone network (**15**).

Referring to FIG. **1**, in the embodiment shown, the access code in the access code field (**142**) is a telephone number identifying a channel **20**, **22**, or **24** that is in communication with the gateway **18** to the IP network **26**. Through the gateway **18**, the channel **20**, **22**, or **24** is thus operably configured to cooperate with the IP network **26** to cause a call from the mobile telephone **12** to the callee to be routed through the IP network. Routing the call through the IP network may involve engaging the routing controller **30** to route the call on the IP network **26** to the callee, as described below. However, it will be appreciated that in other embodiments, the access code need not be a telephone number, but may be any code identifying a channel through which the mobile telephone **12** can initiate a call. Alternatively, if the mobile telephone is capable of voice over IP communications, the access code may be used to identify an IP address in the IP network to which the call is routed. In this embodiment, the IP address may act as the access code. The process **100** shown in FIG. **3** is then ended.

Access Server

Referring to FIG. **6**, the access server (**14**) includes a processor circuit shown generally at **150**. The processor circuit **150** includes a microprocessor **152**, program memory **154**, an I/O port **156**, parameter memory **158**, and temporary memory **160**. The program memory **154**, I/O port **156**, parameter memory **158**, and temporary memory **160** are all in communication with the microprocessor **152**. The processor circuit **150** may alternatively include a plurality of microprocessors or I/O ports, for example, and the components of the illustrated processor circuit **150** may also alternatively be combined into a single device.

The program memory **154** stores blocks of codes for directing the microprocessor **152** to carry out the functions of the access server **14**. The I/O port **156** includes a non-voice network interface **162** for communicating with the non-voice network **16** illustrated in FIG. **1**. The I/O port **156** also includes a routing controller interface **164** for interfacing with the routing controller **30** illustrated in FIG. **1**.

Referring to FIGS. **6** and **7**, a flow chart of blocks of code for directing the microprocessor **152** of the access server (**14**) to provide an access code to the mobile telephone (**12**) is shown generally at **190**. The blocks **190** in FIG. **7** generally represent codes that may be stored in the program memory **154** for directing the microprocessor **152** to perform various functions to provide the access to the mobile telephone (**12**) to enable the mobile telephone to place a call through a channel (**20**, **22**, or **24**).

The process **190** begins at **192**, in response to an interrupt created by or for the microprocessor **152** when it receives an access code request message **110** (as illustrated in FIG. **4**) from the mobile telephone (**12**). In the illustrated embodiment, the access code request message (**110**) is received via the non-voice network interface **162** through a non-voice network (**16**) such as a WiFi or GPRS network, for example. However, it will be appreciated that other embodiments may use different techniques for receiving the access code request message (**110**) from the mobile telephone (**12**).

The process **190** continues at block **196**, which directs the microprocessor **152** to communicate with the routing controller **30** to obtain from the routing controller an access code identifying a channel (illustrated as **20**, **22**, or **24** in FIG. **1**) in communication with the gateway (**18**), wherein the access code is different from the callee identifier in the callee identifier field **116** (shown in FIG. **4**) and is usable by the mobile telephone (**12**) to initiate a call to the callee using the channel, as further described below. Therefore, block **196** preferably causes an access code to be produced by retransmitting the access code request message **110** illustrated in FIG. **4** that was received at **192** from the mobile telephone (**12**), to the routing controller **30** through the routing controller interface **164** of the I/O port **156**.

The process **190** continues at block **198**, which directs the microprocessor **152** to transmit an access code reply message (**140**), including the access code obtained by block **196**, to the mobile telephone (**12**). An exemplary access code reply message is shown in FIG. **5**. In the illustrated embodiment, an access code reply message (**140**) is produced by the routing controller **30** in a manner described below in response to the access code request message (**110**) that was transmitted to the routing controller at block **196**, and the access code reply message (**140**) is received from the routing controller through the routing controller interface **164** of the I/O port **156**. Block **198** then causes the access code reply message that was received from the routing controller to be retransmitted to the mobile telephone (**12**). In the illustrated embodiment, the codes in block **198** direct the microprocessor **152** to transmit the access code reply message (**140**) using the non-voice network interface **162** to the non-voice network **16**, which may be a WiFi or GPRS network, for example. However, it will be appreciated that other embodiments may employ other types of networks for communicating the access code reply message (**140**) to the mobile telephone (**12**). The process **190** is then ended.

In summary, referring to FIG. **1**, the access server **14** generally acts as an interface to the routing controller **30** for

T-Mobile Exhibit 1001

relaying access code request messages and access code reply messages between the mobile telephone **12** and the routing controller. Therefore, it will be appreciated that in alternative embodiments, the access server **14** and the routing controller **30** need not be separate, but may, for example, be combined in a single component.

Routing Controller (RC)

Referring to FIG. **1**, generally, the routing controller **30** executes a process to facilitate communication between callers and callees. The function of a routing controller generally in a VoIP system is described in PCT Publication No. WO 2008/052340.

Referring to FIG. **8**, the routing controller (**30**) includes a processor circuit shown generally at **230**. The processor circuit **230** includes a microprocessor (or more generally a processor) **232**, program memory **234**, an I/O port **236**, table memory **238**, temporary memory **240**, and a clock **244**. The program memory **234**, I/O port **236**, table memory **238**, temporary memory **240**, and clock **244** are all in communication with the processor **232**. The processor circuit **230** may include a plurality of microprocessors, for example, and the aforementioned components of the processor circuit **230** may be combined, for example. The program memory **234** includes blocks of code for directing the processor **232** to carry out the functions of the routing controller (**30**), and the I/O port **236** includes an access server interface **242** for communicating with the access server **14**.

In the illustrated embodiment as described above, the access server (**14**) transmits (at block **196** illustrated in FIG. **7**) an access code request message (**110**) to the routing controller (**30**) in order to obtain from the routing controller (**30**) an access code. When an access code request message (**110**) is received at the access server interface **242**, the processor **232** preferably stores certain values from the access code request message in stores in the temporary memory **240** for ease of retrieval. In particular, the temporary memory **240** includes a callee identifier store **246** for storing the callee identifier from the callee identifier field **116** in the access code request message **110** illustrated in FIG. **4**, a caller identifier store **248** for storing the caller identifier that was stored in the caller identifier field **118** of the access code request message **110** illustrated in FIG. **4**, a caller username store **249** for storing the caller username that was stored in the caller username field **112** of the access code request message **110** illustrated in FIG. **4**, and an access code store **250** for storing an access code that is selected when the routing controller (**30**) receives an access code request message (**110**). The temporary memory **240** also includes a local calling area identifier store **245** for storing an identifier of a local calling area associated with the mobile telephone (**12**). The clock **244** generally maintains and stores a representation of a current date and time.

The I/O port **236** further includes a database request port **256** through which a request to the database (**23** in FIG. **1**) can be made, and also includes a database response port **258** for receiving a reply from the database (**23**). The I/O port **236** further includes a routing controller (RC) request message input **260** for receiving an RC request message (illustrated in FIG. **17**) from the call controller (**13** in FIG. **1**) and includes a routing message output **262** for sending a routing message back to the call controller **13**. The I/O port **236** thus acts to receive a caller identifier and a callee identifier contained in an RC request message from the call controller, the RC request message being received in response to initiation of a call by a subscriber of the system, as described below.

The program memory **234** includes blocks of codes for directing the processor **232** to carry out various functions of the routing controller (**30**). One of these blocks includes an RC request message handler **380** which directs the routing controller (**30**) to produce a routing message in response to a received RC request message, an example of which is illustrated in FIG. **17**. The RC request message handler process is shown in greater detail at **380** in FIGS. **18**A through **18**C. Another of these blocks in the program memory **234** includes an access code generator, which is described at **270** in FIG. **12**, and which directs the routing controller (**30**) to produce an access code as directed by the program codes in block **196** shown in FIG. **7**. Yet another of these blocks in the program memory **234** includes a local calling area identifier generator, which directs the routing controller (**30**) to produce a local calling area identifier using the location identifier from the location identifier field **119** of the access code request message **110** illustrated in FIG. **4**.

Local Calling Area Identifier Generator

Referring to FIG. **1**, it will be appreciated that preferably, a call made by the mobile telephone **12** using the access code obtained from the access server **14** will be a local call for the mobile telephone **12**, based on a geographical location of the mobile telephone. Therefore, blocks in the program memory **234** include a local calling area identifier generator, which directs the routing controller **30** to produce a local calling area identifier.

For example, the local calling area identifier generator may direct the microprocessor **152** to access a dialing profile associated with the caller. The dialing profile may be identified using the username in the username field **112** in the access code request message **110** illustrated in FIG. **4**, and to store in the local calling area identifier field **245** a default location of the caller retrieved from the dialing profile associated with the caller.

Referring to FIG. **9**, an exemplary dialing profile is illustrated generally at **200** and includes a username field **202**, a domain field **204**, and calling attributes comprising a national dialing digits (NDD) field **206**, an international dialing digits (IDD) field **208**, a country code field **210**, a local area codes field **212**, a caller minimum local number length field **214**, a caller maximum local number length field **216**, a reseller field **218**, a maximum number of concurrent calls field **220**, a current number of concurrent calls field **222**, and a default local calling area identifier field **224**. Therefore, in some embodiments, the local calling area identifier generator directs the microprocessor **152** to determine a local calling area associated with the mobile telephone (**12**) by retrieving the default local calling area identifier from the default local calling area identifier field **224** of the dialing profile **200**.

Effectively, the dialing profile **200** is a record identifying calling attributes of the caller identified by the username in the username field **202**. More generally, dialing profiles **200** represent calling attributes of respective users, and are discussed in more detail in PCT publication No. WO 2008/052340. As described in PCT publication No. WO 2008/052340, a dialing profile of the type shown in FIG. **9**, and also other records such as direct-in-dial (DID) records, call blocking records, call forwarding records, and voicemail records, may be created whenever a user registers with the system or agrees to become a subscriber to the system.

Alternatively, the local calling area identifier generator may generate a local calling area identifier to be stored in the local calling area identifier store **245** using the location identifier from the location identifier field **119** of the access code request message **110** illustrated in FIG. **4**. As described above, the location identifier field (**119**) may store one or more of an IP address of the mobile telephone (**12**) in a wireless IP network, an identifier of a wireless voice signal

T-Mobile Exhibit 1001

station in wireless communication with the mobile telephone, and a user-configured identifier. One or more of these values may be used to identify a local calling area that is or is likely to be associated with the mobile telephone (**12**) in order to generate a local calling area identifier to be stored in the local calling area identifier store **245**.

For example, it has been found that services available from web sites such as http://www.ip2location.com/ and http://www.serviceobjects.com/products/dots_ipgeo.asp, for example, can produce a name of a location, and also latitude and longitude values, associated with an IP address. Using this information derived from an IP address, or other information from the location identifier field (**119**), a local calling area may be identified by hierarchical jurisdictional designations (such as country, province, and city in Canada or country, state, and city in the United States) and encoded as codes identifying the local calling area. These codes may then be stored in the local calling area identifier store **245**.

Access Code Association Table

In the illustrated embodiment, the table memory **238** (shown in FIG. **8**) includes an access code association table **170**, an example of which is illustrated in FIG. **10**, for associating access codes with callee identifiers, caller identifiers, caller usernames, timeouts, and timestamps. Although the routing controller (**30**) is illustrated in this embodiment as a separate component from the access server (**14**), it will be appreciated that in other embodiments, the routing controller (**30**) may be part of or integrated with the access server (**14**), and in these other embodiments, the access code association table **170** may be part of or integrated with the access server.

Referring to FIGS. **1** and **10**, the access code association table **170** generally includes a plurality of records, each having an access code field **173** storing an access code. The access codes in the access code association table **170** may thus form a pool of access codes, where each access code may identify a respective telephone number. In the illustrated embodiment, the access codes in the access code fields **173** of records of the access code association table **170** identify respective channels (illustrated by example only as **20**, **22**, and **24**) that are operably configured to cooperate with the IP network **26** via the gateway **18** to cause a call involving the mobile telephone **12** to be routed through the IP network.

Referring to FIG. **10**, the exemplary access code association table **170** includes records **172**, **174**, **176**, **178**, and **180**, each having respective fields for storing a local calling area identifier **171**, an access code **173**, a channel identifier **175**, a callee identifier **177**, a caller identifier **179**, a caller username **183**, a timeout **181**, and a timestamp **182**. Generally, a record in the access code association table **170** will be created for each access code that identifies a channel (such as the channels **20**, **22**, and **24** illustrated in FIG. **1**) that is configured or configurable to establish communication through a gateway (such as the gateway **18** illustrated in FIG. **1**) to an IP network (**26** in FIG. **1**) in response to a call received at the channel. When a record is created in respect of a channel, the local calling area identifier field **171** is preferably initialized with an identifier of a local calling area associated with the channel, the access code field **173** is preferably initialized with an access code associated with the channel, and the channel identifier field **175** is preferably initialized with an identifier of the channel. The remaining fields (for storing a callee identifier **177**, a caller identifier **179**, a caller username **183**, a timeout **181**, and a timestamp **182**) are preferably initialized with default "null" values when a record is created. The fields for storing a local calling area identifier **171**, an access code **173**, a channel identifier **175** preferably remain generally constant during ordinary operation of the access code association table **170**, although the values stored in the fields for storing a callee identifier **177**, a caller identifier **179**, a caller username **183**, a timeout **181**, and a timestamp **182** may vary as described below. It will be appreciated that in some embodiments, one or more of the fields for storing a local calling area identifier **171**, a channel identifier **175**, a caller identifier **179**, a caller username **183**, a timeout **181**, and a timestamp **182** may not be required and be omitted.

As noted above, the local calling area identifier field **171** is preferably initialized with an identifier of a local calling area associated with the channel. The local calling area identifier field **171** preferably stores codes that are encoded in the same manner as the codes in the local calling area identifier store **245**, as described above, so that an access code in the local calling area identified by the codes in the local calling area identifier store **245** may be identified by searching the access code association table **170** for an access code associated with a local calling area identifier in the associated local calling area identifier field **171** that matches the local calling area identifier in the local calling area identifier store **245**. It has been found that information available from web sites such as http://en.wikipedia.org/wiki/List_of_NANP_area_codes, and services available from web sites such as http://www.serviceobjects.com/demos/PhoneExchangeDemo.asp, for example, may be used to determine a local calling area identifier associated with a given access code where, for example, the access code is a PSTN telephone number.

In the exemplary access code association table **170**, the access codes in the access code fields **173** are telephone numbers for PSTN lines, three of which are in the 604 area code in Vancouver, British Columbia, Canada, and two of which are in the 416 area code in Toronto, Ontario, Canada. It will be appreciated that the access code association table **170** is an example only, and other access code association tables may include any number of access codes, which need not be PSTN telephone numbers, and which need not be limited to particular geographical areas.

In the exemplary access code association table **170**, the access code field **173** in the record **174** stores an access code 1-604-345-2323, which may be a local telephone number for Vancouver, British Columbia, Canada, and the callee identifier field **177** of the record **174** stores a callee identifier 1-403-789-1234, which may be a telephone number for a callee in Calgary, Alberta, Canada for example, thereby associating the callee identifier 1-403-789-1234 with the access code 1-604-345-2323. Furthermore, the caller identifier field **179** of the record **174** stores a caller identifier 1-416-444-1441 and the caller username field **183** stores a caller username 2001 1050 8667, thereby associating the caller identifier 1-416-444-1441 and caller username 2001 1050 8667 with the aforementioned access code and callee identifier. The caller identifier 1-416-444-1441 may be associated with a mobile telephone normally geographically located in Toronto, Ontario, Canada, but which may be in Vancouver and is therefore using a Vancouver-based access code to place a call to a Calgary-based number, for example. In the example record **174**, the timestamp field **182** indicates that the callee identifier 1-403-789-1234, the caller identifier 1-416-444-1441, and the caller username 2001 1050 8667 were associated with the access code 1-604-345-2323 on Jun. 15, 2008 at 10:31 am, and the timeout field **181** indicates that this association is to expire 10 minutes after the time indicated in the timestamp field.

Likewise, the exemplary record **178** indicates that the callee identifier 1-604-321-1234, the caller identifier 1-416-444-1234, and the caller username 2001 1050 4141 were associated with the access code 1-416-234-4646 on Jun. 15,

T-Mobile Exhibit 1001

2008 at 2:21 pm, and the timeout field **181** of the record **178** indicates that this association is to expire within 10 minutes of the time in the timestamp field **182**.

It will also be appreciated that the access code association table **170** may, in other embodiments, be substituted with other data structures or storage media. For example, in alternative embodiments, as described below, a DID record of the type shown at **370** in FIG. **11** may associate an access code with a callee identifier and with other information such as a caller identifier, a timeout value, and a timestamp value, additionally or alternatively to the access code association table **170**.

DID Bank Table Records

As described in PCT Publication No. 2008/052340, a DID bank table record may be created and stored in a DID bank table in the database (**23** in FIG. **1**) when a user registers with the system, to associate the username of the user and a host name of the node with which the user is associated, with a number on the PSTN network formatted in compliance with the E.164 standard set by the International Telecommunication Union (ITU). However, as explained below, DID records may, in some embodiments, also associate usernames and host names with respective access codes, and may also associate access codes with respective callee identifiers and with other information such as caller identifiers, timeout values, and timestamp values.

Referring to FIG. **11**, an exemplary DID bank table record is shown generally at **370**, and includes a username field **371**, a user domain field **372**, and a DID field **373**. The username field **371** may store a username of a user of the system, in which case the user domain field **372** stores a host name of the node with which the user is associated, and the DID field **373** stores an E.164 number on the PSTN network associated with the user. Exemplary host names stored in the user domain field **372** include sp.yvr.digifonica.com for Vancouver, British Columbia, Canada and sp.lhr.digifonica.com for London England, for example, as described in PCT Publication No. 2008/052340. If the user has multiple telephone numbers, then multiple records of the type shown at **370** would be included in the DID bank table, each having the same username and user domain, but different DID field **373** contents reflecting the different telephone numbers associated with that user.

However, DID fields **373** of DID bank table records **370** may also store access codes, in which case the username field **371** may store a username associated with the access code. In these DID bank table records **370**, the user domain field **372** stores a host name of the node with which the access code is associated. Therefore, DID bank table records **370** may, in some embodiments, associate usernames and host names with respective access codes.

The exemplary DID bank table record **370** further includes a callee identifier field **374**, a caller identifier field **375**, a timeout field **376**, a timestamp field **377**, a local calling area identifier field **378**, a channel identifier field **379**, and a caller username field **381**, which may be used in an analogous manner to the callee identifier field **177**, the caller identifier field **179**, the timeout field **181**, the timestamp field **182**, the local calling area identifier field **171**, the channel identifier field **175**, and the caller username field **183** respectively of the access code association table **170** illustrated in FIG. **10**. The DID bank table records **370** may thus associate access codes with respective local calling area identifiers, callee identifiers, caller identifiers, caller usernames, timeouts, and timestamps, although the caller identifier field **375**, timeout field **376**, timestamp field **377**, local calling area identifier field **378**, channel identifier field **379**, and caller username field **381** may not be necessary, and one or more of these fields may be omitted in some embodiments.

Furthermore, it will be appreciated that the callee identifier field **374**, caller identifier field **375**, timeout field **376**, and timestamp field **377** of the DID bank table record **370** may be omitted for DID table records that are not in respect of access codes, but rather are in respect of telephone numbers of users of the system, for example, as described in PCT Publication No. 2008/052340. The callee identifier field **374**, caller identifier field **375**, timeout field **376**, and timestamp field **377** of the DID bank table record **370** may also be omitted in embodiments where the access code association table **170** includes records with these types of fields.

For simplicity, the following description is directed to embodiments wherein an access code association table **170** associates access codes with respective callee identifiers, caller identifiers, timeout values, and timestamp values. However, it will be appreciated that the processes described herein for records in the access code association table **170** may additionally or alternatively be applied to DID bank table records **370** in an analogous manner.

Access Code Generator

Referring back to FIGS. **1**, **4**, and **8** in the illustrated embodiment as described above, the access server **14** transmits (at block **196** illustrated in FIG. **7**) an access code request message **110** to the routing controller **30** in order to obtain from the routing controller **30** an access code. When an access code request message **110** is received at the access server interface **242**, the processor **232** preferably authenticates the user by making various enquiries of databases to which it has access, to determine whether or not the password in the password field **114** of the access code request message **110** matches a password stored in the database in association with the username in the username field **112**. Various functions may be used to pass encryption keys or hash codes back and forth to ensure that the transmittal of passwords is secure. If the user is successfully authenticated, the processor **232** then preferably produces an access code.

Referring to FIGS. **8** and **12**, a process for producing an access code is shown generally at **270**. Essentially the process **270** determines whether the access code in a given record (referred to below as the "currently addressed record") in the access code association table shown at **170** in FIG. **10** is within the local calling area identified by the local calling area identifier store **245**, and whether the access code is currently available for association with a callee identifier. In order to produce an access code in response to receiving an access code request message (**110**) from the access server (**14**), the processor **232** of the routing controller (**30**) preferably searches the pool of access codes in the access code association table (**170**) to identify an access code identifying a channel usable by the mobile telephone (**12**) to initiate a call to the callee, using the process **270** until an available access code in the local calling area identified by the local calling area identifier store **245** is identified. The access code generator thus preferably selects an access code from the pool of access codes in the access code association table (**170**), and preferably selects an access code in a local calling area associated with the mobile telephone (**12**).

Starting with the first record in the access code association table, the process **270** begins at block **272**, which directs the processor **232** of the routing controller (**30**) to determine whether the access code in the currently addressed record of the access code association table **170** is associated with the same local calling area as the mobile telephone (**12**) as identified by the contents of the local calling area identifier store **245**. If at block **272** the access code of the currently addressed

T-Mobile Exhibit 1001

record is not associated with the same local calling area as the mobile telephone (**12**), the process **270** ends, the next record in the access code association table **170** is addressed, and the process is repeated for the next record in the access code association table.

However, if at block **272** the access code of the currently addressed record is associated with the same local calling area as the mobile telephone (**12**), or if the access code request message **110** (illustrated in FIG. **4**) did not include a local calling area identifier, then the process **270** continues at block **274**, which directs the processor **232** to determine whether the access code of the currently addressed record is associated with a callee identifier. To do this, the processor **232** determines whether the callee identifier field (**177**) of the currently addressed record stores a "null" value that was assigned to it on initialization, or whether the callee identifier field instead stores a callee identifier. In other words the processor checks to see whether the currently addressed record has already been in use.

If at block **274** the callee identifier field (**177**) of the currently addressed record in the access code association table (**170**) does store a callee identifier and not the "null" value that was assigned to the callee identifier field on initialization (for example, records **174** and **178** in FIG. **10**), then the access code of that record is associated with a callee identifier, and the process **270** continues at block **278**, which directs the processor **232** to determine whether the association of the callee identifier with the access code has expired. In the illustrated embodiment, the codes at block **278** direct the processor **232** to determine whether the sum of the contents of the timestamp field (**182**) and of the timeout field (**181**) in the currently addressed record of the access code association table **170** (shown in FIG. **10**) is less than the current time represented by the clock **244**. If at block **278** the sum of the timeout and timestamp fields in the currently addressed record of the access code association table **170** is less than the time represented by the clock **244**, then the association of the callee identifier with the access code is not expired and the process **270** ends, the next record in the access code association table (**170**) is addressed, and the process **270** is repeated for the next record in the access code association table.

However, if at block **278** the sum of the contents of the timeout and timestamp fields (**181** and **182**) in the currently addressed record of the access code association table (**170**) is not less than the time represented by the clock **244**, then the association of the callee identifier with the access code has expired, and the process **270** continues at block **276** which directs the processor **232** to store the contents of the access code field **173** of the currently addressed record in the access code store **250** of the temporary memory **240** of the routing controller **30**.

Referring to FIGS. **8**, **10**, and **12**, if at block **274** the callee identifier field in the currently addressed record does not store a callee identifier but stores instead the "null" value that was assigned to the callee identifier field on initialization (for example, records **172**, **176**, and **180**), then the access code of that record is not associated with a callee identifier, and the process **270** continues at block **276**, which directs the processor **232** to store the access code from the access code field **173** of the currently addressed record, in the access code store **250** in the temporary memory **240**.

After the selected access code is stored in the access code store **250** at block **276**, the process **270** continues at block **280**, which directs the processor **232** to store the callee identifier from the callee identifier store **246** in the callee identifier field **177** of the currently addressed record, thereby creating an association of the callee identifier with the selected access code.

The process **270** then continues at block **282**, which directs the processor **232** to store the caller identifier from the caller identifier store **248** (which identifies the mobile telephone **12** shown in FIG. **1**) in the caller identifier field **179** of the currently addressed record of the access code association table **170**, thereby also storing the caller identifier in association with the selected access code.

The process **270** then continues at block **283**, which directs the processor **232** to store the caller username from the caller username store **249** in the caller username field **183** of the currently addressed record of the access code association table **170**, thereby also storing the caller username in association with the selected access code.

The process **270** then continues at block **284**, which directs the processor **232** to store timeout and timestamp values in the timeout and timestamp fields **181** and **182** of the currently addressed record of the access code association table **170**, thus further storing, in association with the selected access code, a timestamp for use in determining when the usability of the access code to initiate a call to the callee will expire. A default value, such as 10 minutes, for example may be stored in the timeout field **181** of the currently addressed record. Also, the current time indicated by the clock **244** is preferably stored in the timestamp field **182** of the currently addressed record.

In alternative embodiments, the access code association table (**170**) might not include fields for a caller identifier, caller username, a timeout, or a timestamp. In these embodiments, one or more of blocks **282**, **283**, and **284** described above are not necessary, and one or more of the caller identifier store **248** and the caller username store **249** may be omitted.

In summary, the access code generator in the illustrated embodiment responds to receiving an access code request message **110** illustrated in FIG. **4** from the access server (**14**) by first authenticating the user, and then by searching through a pool of access codes, using the process **270** shown in FIG. **12**, to identify an access code that is associated with the local calling area identified by the local calling area identifier store (**245**) and that is not previously and validly associated with another callee identifier. It will be appreciated that in alternative embodiments, different data structures and algorithms may be preferable for identifying an access code that meets the aforementioned criteria. For example, in accordance with conventional database design that is well-known in the art, the records illustrated in the access code association table **170** illustrated in FIG. **10** may alternatively be organized in a binary tree according to the value in the local calling area identifier field **171**, or in separate tables for respective local calling area identifiers, for example, in order to enable a more efficient search of the access code association table for an access code that satisfies the aforementioned criteria. Therefore, the access code association table (**170**) and the process **270** illustrated in FIG. **12** are examples only, and one of ordinary skill in the art will readily appreciate numerous alternative data structures and algorithms.

Gateway

Referring to FIG. **13**, in this embodiment, the gateway (**18**) includes a processor circuit shown generally at **300**, which includes a microprocessor **302**. The processor circuit **300** also includes a program memory **304**, a memory **305**, and an I/O port **306**, all of which are in communication with the microprocessor **302**. The processor circuit **300** may include mul-

T-Mobile Exhibit 1001

tiple processors etc., and the aforementioned components of the processor circuit **300** may alternatively be combined.

The I/O port **306** includes a channel interface **308**, which, in the illustrated embodiment, is in communication with the channels **20**, **22**, and **24** that were also illustrated in FIG. **1**. Where, as in the illustrated embodiment, the channels **20**, **22**, and **24** are PSTN telephone lines in the PSTN network **29**, the channel interface **308** may, for example, be a T1 port for communication with one or more T1 lines (illustrated at **27** in FIG. **1**) of a PSTN service provider, in a manner well-known in the art. The I/O port in the illustrated embodiment also includes an internet interface **309** for interfacing with the IP network **26** illustrated in FIG. **1**. The program memory **304** stores blocks of codes for directing the microprocessor **302** to carry out the functions of the gateway (**18**). It has been found that the AS5350 Universal Gateway available from Cisco Systems, Inc. of San Jose, Calif. may, for example, be suitable as the gateway (**18**).

Referring back to FIG. **1**, and also still to FIG. **13**, when a call is received on one of the channels **20**, **22**, or **24**, the microprocessor **302** causes the I/O port **306** to use the internet interface **309** to send a Session Initiation Protocol (SIP) Invite message to a pre-determined node with which the gateway **18** is associated, which in the illustrated embodiment is the first node **11**. Generally, the gateway **18** will be associated with a node that is geographically closest to the gateway, in order to minimize transmission times over the IP network **26**. In response to the SIP Invite message, the call controller **13** sends an RC request message to the routing controller **30** which makes various enquiries of the database **23** to produce a routing message that is sent back to the call controller **13**. The call controller **13** then communicates with the media relay **28** to cause a communications link including an audio path (and a videopath if a videophone call) to be established through the media relay to the same node, a different node, or to a communications supplier gateway as shown generally at **34** to carry audio, and where applicable, video traffic to the call recipient or callee.

Referring to FIG. **14**, an exemplary SIP Invite message is shown generally at **310** and includes a caller identifier field **312**, a callee identifier field **314**, a digest parameter field **315**, a call identifier field **316**, an IP address field **317**, and a gateway UDP port field **318**. Examples of values for the fields in the SIP Invite message **310** are shown for illustration purposes only in FIG. **14**. The caller identifier in the caller identifier field **312** is preferably in the form of the telephone number of the caller followed by the "@" symbol, which in turn is followed by the IP address of the gateway (**18**) in the IP network (**26**). The caller identifier may be determined by retrieving calling line identification (CLID) information from the signal provided by the PSTN network (**29**) to the gateway (**18**) for example. Where the caller identification information is not available to the gateway (**18**), the caller identifier in the caller identifier field **312** preferably includes a pre-assigned number (such as 11111, for example) indicating that the caller identification information was not available, followed by the "@" symbol and then by the IP address of the gateway (**18**).

The callee identifier in the callee identifier field **314** is the access code identifying the channel (**20**, **22**, or **24** in the example of FIG. **1**) on which the call was placed, and which was received from the access server (**14**). In the illustrated example, the access code is the PSTN telephone number 1-604-345-1212 corresponding to the channel **20** illustrated in FIG. **1**, and to the access code stored in the access code field **173** of the record **172** in the exemplary access code association table **170** illustrated in FIG. **10**.

The digest parameter in the digest parameter field **315** is generated by the gateway (**18**) and may uniquely identify the SIP session that is initiated with the SIP Invite message **310**.

The call identifier in the call identifier field **316** is, in the illustrated embodiment, a four-digit hexadecimal number generated by the gateway (**18**) to identify the call, followed by the "@" symbol, which in turn is followed by the IP address of the gateway.

The IP address in the IP address field **317** is the IP address of the gateway (**18**) in the IP network (**26**), and the gateway UDP port number in the gateway UDP port field **318** includes a UDP port identifier identifying a UDP port at which the audio/video path will be terminated at the gateway (**18**).

It should be noted that throughout the description of the embodiments of this invention, the IP/UDP addresses of all elements such as the gateway (**18**) will be assumed to be valid IP/UDP addresses directly accessible via the Internet or a private IP network, for example, depending on the specific implementation of the system. As such, it will be assumed, for example, that the gateway (**18**) will have an IP/UDP address directly accessible by the call controllers and the media relays on their respective nodes, and those addresses will not be obscured by Network Address Translation (NAT) or similar mechanisms. In other words, the IP/UDP information contained in SIP messages (for example the SIP Invite message or the RC Request message which will be described below) will match the IP/UDP addresses of the IP packets carrying these SIP messages.

It will be appreciated that in many situations, the IP addresses assigned to various elements of the system may be in a private IP address space, and thus not directly accessible from other elements. Furthermore, it will also be appreciated that NAT is commonly used to share a "public" IP address between multiple devices, for example between home PCs and IP telephones sharing a single Internet connection. For example, the gateway (**18**) may be assigned an IP address such as 192.168.0.5. This address is located in so called "non-routable" (IP) address space and cannot be accessed directly from the Internet. In order for this device to communicate with other computers located on the Internet, the IP address has to be converted into a "public" IP address, for example 24.14.102.5 assigned by the Internet Service Provider, by a device performing NAT, typically a router. In addition to translating the IP address, NAT typically also translates UDP port numbers, for example an audio path originating at the gateway (**18**) and using a UDP port **12378** at its private IP address, may have be translated to a UDP port **23465** associated with the public IP address of the NAT device. In other words, when a packet originating from the gateway (**18**) arrives at an Internet-based node, the source IP/UDP address contained in the IP packet header will be 24.14.102.5:23465, whereas the source IP/UDP address information contained in the SIP message inside this IP packet will be 192.168.0.5:12378. The mismatch in the IP/UDP addresses may cause a problem for SIP-based VoIP systems because, for example, a node will attempt to send messages to a private address but the messages will never get there.

Call Controller

Referring to FIG. **15**, the call controller (**13**) includes a processor circuit shown generally at **320**. The processor circuit **320** includes a microprocessor **322**, program memory **324**, and an I/O port **326**. The program memory **324** and the I/O port **326** are in communication with the microprocessor **322**. The processor circuit **320** may include a plurality of microprocessors, a plurality of program memories, and a plurality of I/O ports to be able to handle a large volume of

T-Mobile Exhibit 1001

calls. However, for simplicity, the processor circuit **320** will be described as having only one microprocessor **322**, program memory **324**, and I/O port **326**, it being understood that there may be more.

Generally, the I/O port **326** includes an input **328** for receiving messages such as the SIP Invite message from the gateway (**18**) or from a VoIP telephone (**36** in FIG. **1**, for example). The I/O port **326** also has an RC request message output **330** for transmitting an RC request message to the routing controller **30** of FIG. **1**, an RC message input **332** for receiving routing messages from the routing controller **30**, a gateway output **334** for transmitting messages to the gateway **18** and/or **34** shown in FIG. **1** to advise the gateway **18** and/or **34** to establish an audio path, for example, and a gateway input **336** for receiving messages from the gateway **18** and/or **34**. The I/O port **326** further includes a SIP output **338** for transmitting messages to the gateway (**18** and/or **34**) or VoIP telephone (**36**, for example) to advise the gateway **18** and/or **34** or IP telephone of the IP addresses of the gateways which will establish the audio/video path. The I/O port **326** further includes a voicemail server input and output **340** and **342** respectively for communicating with the voicemail server **19** shown in FIG. **1**.

While certain inputs and outputs have been shown as separate, it will be appreciated that some may be a single IP address and IP port. For example, the messages sent to the routing controller (**30**) and received from the routing controller (**30**) may be transmitted and received on the same single IP port.

The program memory **324** includes blocks of code for directing the microprocessor **322** to carry out various functions of the call controller (**13**). For example, these blocks of code include a first block **344** for causing the processor circuit **320** to execute a SIP Invite to RC Request process to produce an RC Request Message in response to a received SIP Invite message. In addition, there is a Routing Message to Gateway message block **346** which causes the processor circuit **320** of the call controller to produce a gateway query message in response to a received routing message from the routing controller (**30**).

Referring to FIGS. **15** and **16**, the SIP Invite to RC Request process is shown in more detail at **344**. On receipt of a SIP Invite message of the type shown in FIG. **14**, block **350** directs the processor circuit **320** to produce an RC Request Message. Block **352** then directs the processor circuit **320** to cause the RC Request Message to be sent to the routing controller **30** illustrated in FIG. **1**.

Referring to FIG. **17**, an exemplary RC request message is shown generally at **360** and includes a caller identifier field **362**, a callee identifier field **364**, a digest parameters field **366**, and a call identifier field **368**. These fields may be populated with the contents of the caller identifier field **312**, callee identifier field **314**, digest parameter field **315**, and call identifier field **316** respectively of the SIP Invite message **310** illustrated in FIG. **14**. In other embodiments, the RC request message may further include a type field (not shown) containing a type code to indicate whether the call is from a third party or from a system subscriber. Other variations of an RC request message are explained in PCT Publication No. WO 2008/052340. A type field (not shown) in the RC request message **360** may be advantageous in embodiments where SIP Invite messages may also be received from an IP telephone that is using VoIP software to make a voice call. However, in the embodiments that are illustrated herein, SIP Invite messages originate from the gateway (**18**), and therefore a type designation is not necessary and may be omitted from the RC request message **360**. In embodiments where a SIP Invite message may be received from an IP telephone, the SIP invite to RC request process shown in FIG. **16** may require additional steps, as illustrated in FIG. 5 of PCT Publication No. WO 2008/052340.

RC Request Message Handler

As illustrated in FIG. **8**, the program memory **234** includes an RC request message handler **380** which directs the routing controller (**30**) to produce a routing message in response to a received RC request message (**360**). Referring to FIG. **18**A, the RC request message handler **380** begins with a first block **382** that directs the RC processor circuit (**230**) to separately store the contents of the callee identifier field **364** and caller identifier field **362** of the RC request message (**360**) in the callee identifier store **246** and the caller identifier store **248** respectively of FIG. **8**.

Block **384** then directs the RC processor circuit (**230**) to use the contents of the caller username store **249** to locate and retrieve from the database (**23**) a dialing profile **200** associated with the caller, as described above and illustrated in FIG. **9**, for example. The retrieved dialing profile may then be stored in the temporary memory **240**, for example.

The RC request message handler **380** continues at block **386**, which directs the processor circuit (**230**) of the routing controller to determine whether the contents of the current number of concurrent calls field **222** of the dialing profile **200** shown in FIG. **9** are less than the contents of the maximum number of concurrent calls field **220** of the dialing profile for the caller and, if so, block **388** directs the processor circuit to increment the contents of the current number of concurrent calls field **222** and the processor circuit (**230**) is directed to point A in FIG. **18**B. If the contents of the current number of concurrent calls field **222** are equal to or greater than the contents of the maximum number of concurrent calls field **220**, then block **390** directs the processor circuit (**230**) to send an error message back to the call controller (**13**) to cause the call controller to notify the caller that the maximum number of concurrent calls has been reached and no further calls can exist concurrently, including the presently requested call.

Assuming that block **386** allows the call to proceed, the RC processor circuit (**230**) is directed to perform certain checks on the callee identifier in the callee identifier field **246** in FIG. **8**. These checks are shown in greater detail in FIG. **18**B.

Referring to FIG. **18**B, the RC processor circuit (**230**) is directed to a first block **392** that causes it to determine whether a digit pattern of the callee identifier includes a pattern that matches the contents of the international dialing digits (IDD) field **208** in the dialing profile **200** (shown in FIG. **9**) associated with the caller. If so, then block **394** directs the RC processor circuit (**230**) to set a call type code identifier variable maintained by the processor to indicate that the call is an international call, and block **396** directs the processor to produce a reformatted callee identifier by reformatting the callee identifier into a predefined digit format. In this embodiment, this is done by removing the pattern of digits matching the IDD field contents (**208**) of the caller dialing profile **200** to effectively shorten the callee identifier. Then, block **398** directs the RC processor circuit (**230**) to determine whether or not the callee identifier has a length which meets criteria establishing it as a number compliant with the E.164 Standard set by the ITU. If the length does not meet these criteria, then block **400** directs RC processor circuit (**230**) to send back to the call controller (**13**) a message indicating the length is not correct. The process **380** is then ended. At the call controller **13**, routines (not shown) stored in the program memory **324** may direct the processor circuit (**320** of FIG. **15**) to respond to the incorrect length message by transmitting a message back

T-Mobile Exhibit 1001

to the mobile telephone (**12** shown in FIG. **1**) to indicate that an invalid number has been dialed.

If the length of the amended callee identifier meets the criteria set forth at block **398**, then block **402** directs the RC processor circuit (**230**) to make a database request to the database (**23**) to determine whether or not the amended callee identifier is found in the DID field (**373**) of a record such as shown in FIG. **11** in the DID bank table. If at block **402** the RC processor circuit (**230**) receives a response from the database (**23**) indicating that the reformatted callee identifier produced at block **396** is found in the DID field (**373**) of a record in the DID bank table, then the callee is a subscriber to the system and the call is classified as a private network call by directing the processor to block **404**, which directs the RC processor circuit (**230**) to copy the contents of the corresponding username field (**371** in FIG. **11**) from the callee DID bank table record (**370** in FIG. **11**) into the callee identifier store (**246** in FIG. **8**). Thus, the RC processor circuit (**230**) locates a subscriber username associated with the reformatted callee identifier. The processor (**232**) is then directed to point B in FIG. **18**A.

Calls to Subscribers in Different Nodes

Referring back to FIG. **1**, as noted above, the gateway **18** is preferably associated with a pre-determined node, which in the illustrated embodiment is the first node **11**. Referring back to FIG. **18**A, block **406** directs the processor (**232** of FIG. **8**) to execute a process to determine whether or not the node associated with the reformatted callee identifier in the callee identifier store (**246** in FIG. **8**, which, at block **404**, was set to be a username of the callee) is the same node that is associated with the gateway **18** illustrated in FIG. **1**.

To do this, the processor (**232**) may, for example, identify a node associated with the gateway (**18**) by using an IP address associated with the gateway to determine a node identifier of the gateway. An IP address associated with the gateway (**18**) may, for example, be obtained from either the caller identifier field **362** or the call identifier field **368** of the RC request message **360** illustrated in FIG. **17**, as each of these fields includes a portion following an "@" symbol that indicates an IP address of the gateway. In order to determine a node identifier associated with the gateway (**18**) using the IP address associated with gateway (**18**), the processor **232** (illustrated in FIG. **8**) may access a gateway node association table stored in the database **23** (illustrated in FIG. **1**).

Referring to FIG. **19**, an exemplary gateway node association table is shown generally at **480**. The exemplary gateway node association table **480** includes first and second records **482** and **484**, each having a respective gateway IP address field **486** and a respective node identifier field **488**. It will be appreciated that the exemplary gateway node association table **480** is an example for illustration purposes only. The values in the gateway IP address fields **486** are preferably initialized when a gateway (such as the gateway **18** illustrated in FIG. **1**) is installed as part of the system (**10**), and are preferably updated as the IP addresses of the respective gateways may change from time to time. The values in the node identifier fields **488** are also preferably initialized when a gateway (such as the gateway **18** illustrated in FIG. **1**) is installed as part of the system (**10**).

As indicated above, the reformatted callee identifier in the callee identifier store (**246** in FIG. **8**) was set at block **404** in FIG. **18**B to be a username of the callee from the username field **371** (illustrated in FIG. **11**), and in this embodiment, a prefix of the username of the callee preferably indicates a node associated with the callee. In the illustrated embodiment, the left-most digit in the username of the callee is a continent code, which is a sufficient prefix to identify a node associated with the callee. However, it will be appreciated that in other embodiments, other prefixes or other information may identify the associated node. Preferably, the values in the node identifier fields **488** correspond to the prefixes of the usernames in the username fields **371** (illustrated in FIG. **11**), so that the node associated with the callee is the same node that is associated with the gateway **18** illustrated in FIG. **1** if the prefix of the username of the callee matches the node identifier associated with the gateway (**18**). Therefore, in the illustrated embodiment, if the reformatted callee identifier in the callee identifier store (**246** in FIG. **8**) is 2001 1050 8667, for example, then in the example of FIG. **19**, the node associated with the callee is the same node as the node identified by the continent code "2" that is associated with the gateway associated with the IP address 20.14.102.5 in the record **482**, but is not the same node as the node identified by the continent code "5" that is associated with the gateway associated with the IP address 104.12.131.12 in the record **484**.

Referring back to FIG. **18**A, if at block **406** the prefix of the username of the callee does not match the node identifier associated with the gateway (**18**), then the call is a "cross-domain" call, and block **408** in FIG. **18**A directs the processor (**232** in FIG. **8**) to set a call type flag in the temporary memory (**240** in FIG. **8**) to indicate the call is a cross-domain call. Then, block **410** of FIG. **18**A directs the processor (**232** of FIG. **8**) to produce a routing message identifying an address on the private network with which the callee identified by the contents of the callee ID buffer is associated and to set a time to live for the call at a maximum value of 99999, for example. Routing messages and time to live values, and also a method of determining the node in the system with which the callee is associated, are further described in PCT Publication No. WO 2008/052340. Once a routing message is produced at block **410**, block **412** directs the processor (**232** in FIG. **8**) to cause the routing message to be sent to the call controller **13** shown in FIG. **1**, and the process ends.

Referring back to FIG. **18**B, if at block **392**, the callee identifier stored in the callee identifier store (**246** in FIG. **8**) does not begin with an international dialing digit, then block **414** directs the processor (**232**) to determine whether or not the callee identifier begins with the same national dial digit code as assigned to the caller. To do this, the processor (**232**) is directed to refer to the retrieved caller dialing profile as shown in FIG. **9**. In FIG. **9**, the national dialing digit code **206** is the number 1. Thus, if the callee identifier begins with the number 1, then the processor (**232**) is directed to block **416** in FIG. **18**B.

Block **416** directs the processor (**232** of FIG. **8**) to examine the callee identifier to determine whether or not the digits following the NDD digit identify an area code that is the same as any of the area codes identified in the local area codes field **212** of the caller dialing profile **200** shown in FIG. **9**. If not, block **418** of FIG. **18**B directs the processor (**232**) to set the call type flag to indicate that the call is a national call. If the digits following the NDD digit identify an area code that is the same as a local area code associated with the caller as indicated by the caller dialing profile, block **420** directs the processor (**232**) to set the call type flag to indicate a local call, national style. After executing block **418** or **420**, block **422** directs the processor (**232**) to format the callee identifier into a pre-defined digit format to produce a re-formatted callee identifier by removing the national dialed digit and prepending a caller country code identified by the country code field **210** of the caller dialing profile shown in FIG. **9**. The processor (**232**) is then directed to block **398** of FIG. **18**B to perform other processing as already described above.

T-Mobile Exhibit 1001

If at block **414**, the callee identifier does not begin with a national dialed digit, block **424** directs the processor (**232**) to determine whether the callee identifier begins with digits that identify the same area code as the caller. Again, the reference for this is the retrieved caller dialing profile shown in FIG. **9**. The processor (**232**) determines whether or not the first few digits of the callee identifier identify an area code corresponding to the contents of any area code identifier stored in the local area code field **212** of the retrieved caller dialing profile **200** (illustrated in FIG. **9**). If so, then block **426** directs the processor (**232**) to set the call type flag to indicate that the call is a local call. It should be noted that the call will not necessarily be a local call in every case where the first few digits of the callee identifier identify an area code corresponding to the contents of an area code identifier stored in the local area code field **212** (illustrated in FIG. **9**), and other determinations of when a call is to be considered local may be appropriate. However, it has been found that the determination described above for block **424** is satisfactory for some purposes. Next, block **428** directs the processor (**232**) to format the callee identifier into a pre-defined digit format to produce a reformatted callee identifier by prepending the caller country code to the callee identifier, the caller country code being determined from the country code field **210** of the retrieved caller dialing profile **200** shown in FIG. **9**. The processor (**232**) is then directed to block **398** for further processing as described above.

If at block **424**, the callee identifier does not start with the same area code as the caller, block **430** directs the processor (**232** of FIG. **8**) to determine whether the number of digits in the callee identifier, i.e. the length of the callee identifier, is within the range of digits indicated by the caller minimum local number length field **214** and the caller maximum local number length field **216** of the retrieved caller dialing profile **200** shown in FIG. **9**, and whether there is more than one area code identifier stored in the local area code field **212** of the retrieved caller dialing profile. If the number of digits in the callee identifier is within the aforementioned range and there is only one area code identifier stored in the local area code field (**212**), then block **432** directs the processor (**232**) to set the call type flag to indicate a local call and block **434** directs the processor (**232**) to format the callee identifier into a pre-defined digit format to produce a reformatted callee identifier by prepending to the callee identifier the caller country code (as indicated by the country code field **210** of the retrieved caller dialing profile **200** shown in FIG. **9**) followed by the caller area code as indicated by the local area code stored in the local area code field **212** of the caller dialing profile **200** shown in FIG. **9**. The processor (**232**) is then directed to block **398** of FIG. **18**B for further processing as described above.

If at block **430**, the callee identifier has a length that does not fall within the range specified by the caller minimum local number length field (**214** in FIG. **9**) and the caller maximum local number length field (**216** in FIG. **9**), or if there is more than one area code identifier stored in the local area code field **212** of the retrieved caller dialing profile **200** illustrated in FIG. **9**, then block **436** directs the processor (**232**) to send an error message back to the call controller (**13**), and the process ends.

In alternative embodiments, such as those illustrated in PCT Publication No. WO 2008/052340, an additional block (**402** in FIG. **8**B of PCT Publication No. WO 2008/052340) may determine whether the callee identifier is a valid username. However, in the embodiment disclosed herein, the callee identifier is assumed to be a telephone number of the callee, and not a username.

From FIG. **18**B, it will be appreciated that there are certain groups of blocks of codes that direct the processor **232** in FIG. **8** to determine whether the callee identifier has certain features such as an international dialing digit, a national dialing digit, an area code and a length that meet certain criteria, and cause the processor **232** to reformat the callee identifier stored in the callee identifier store **246** in FIG. **8**, as necessary into a predetermined target format including only a country code, area code, and a normal telephone number, for example, to cause the callee identifier to be compatible with the E.164 number plan standard in this embodiment. This enables block **402** in FIG. **18**B to have a consistent format of callee identifiers for use in searching through the DID bank table records **370** of the type shown in FIG. **11** to determine how to route calls to subscribers on the same system. Effectively, therefore blocks **392**, **414**, **424**, and **430** establish call classification criteria for classifying the call as a public network call or a private network call. Block **402** classifies the call, depending on whether or not the formatted callee identifier has a DID bank table record, and this depends on how the call classification criteria are met.

Calls to Non-Subscribers

Not all calls will be to subscribers, and this will be detected by the processor **232** of FIG. **8** when it executes block **402** in FIG. **18**B, and does not find a DID bank table record (**370** illustrated in FIG. **11**) that is associated with the callee, in the DID bank table. When this occurs, the call is classified as a public network call, by directing the processor (**232**) to point C in FIG. **18**C.

Referring to FIG. **18**C, block **438** directs the processor (**232**) to determine whether the formatted callee identifier in the callee identifier store **246** in FIG. **8** corresponds to an access code in the access code field **173** of a record in the access code association table **170** illustrated in FIG. **10** that is associated with a callee identifier. Because the callee identifier in the callee identifier store **246** in FIG. **8** has been formatted as described above with reference to FIG. **18**B, block **438** may involve determining whether an access code in the access code field **173** of a record of the access code association table **170** (illustrated in FIG. **10**) matches the formatted callee identifier in the callee identifier store **246** in FIG. **8**, and also whether a callee identifier (as opposed to the "null" value assigned on initialization) is stored in the callee identifier field **177** in association with the access code. As noted above, for simplicity, this description is directed to embodiments wherein an access code association table **170** associates access codes with respective callee identifiers, caller identifiers, timeout values, and timestamp values, although it will be appreciated that the processes described herein for records in the access code association table **170** may additionally or alternatively be applied to DID bank table records **370** in an analogous manner.

If at block **438** the formatted callee identifier in the callee identifier store **246** in FIG. **8** is the same as an access code in the access code field (**173**) of a record of the access code association table **170** illustrated in FIG. **10** that is associated with a callee identifier, then block **440** directs the processor (**232**) to determine whether the caller identifier in the caller identifier store **248** (illustrated in FIG. **8**) is the same as the caller identifier in the caller identifier field (**179**) of the record of the access code association table (**170**), and thus whether the caller identifier in the caller identifier field (**179**) of the record of the access code association table (**170**) identifies the mobile telephone identified by the caller identifier in the caller identifier store **248**. If not, then block **442** directs the processor (**232**) to send an error message to the call controller (**13**), and the process ends.

T-Mobile Exhibit 1001

But if at block **440** the caller identifier in the caller identifier store **248** (illustrated in FIG. **8**) corresponds to the caller identifier in the caller identifier field (**179**) of the record of the access code association table (**170**), then the routing controller (**30**) will produce a routing message that will cause the call controller to establish communication through the IP network (**26**) to the callee in response to a call received at a channel (**20**, **22**, or **24**). Preferably, block **444** includes codes that direct the processor (**232**) to determine whether the association of the access code with the callee identifier has expired, and thus whether the usability of the access code to initiate a call to the callee has expired, in the manner described above for block **278** in FIG. **12**. If at block **444** the association of the access code with the callee identifier has expired, then block **442** directs the processor (**232**) to send an error message to the call controller (**13**), and the process ends. Thus the routing controller produces a routing message that causes the call controller to establish the call only when the association of the access code with the callee identifier has not expired.

It will be appreciated that in alternative embodiments, one or more of the caller identifier, timeout, and timestamp fields **179**, **181**, and **182** may be omitted from the access code association table **170** illustrated in FIG. **10**, and in these embodiments, one or more of the blocks **440**, **442**, and **444** may also be omitted.

If at block **444** the association of the access code with the callee identifier has not expired, or if one or both of blocks **440** and **444** is omitted, then block **446** directs the processor (**232**) to store the callee identifier from the callee identifier field **177** of the record of the access code association table (**170**) in the callee identifier store **246** illustrated in FIG. **8**. The processor (**232**) is then directed to point A in FIG. **18**B to repeat the steps illustrated in FIG. **18**B using the callee identifier retrieved from the callee identifier field (**177**) in the record of the access code association table (**170**).

However, if at block **438** the formatted callee identifier in the callee identifier store **246** in FIG. **8** does not correspond to an access code in a record of the access code association table **170** illustrated in FIG. **10** that is associated with a callee identifier, then block **448** of FIG. **18**B causes the processor (**232**) to set the contents of the callee identifier store **246** of FIG. **8** to be the newly formatted callee identifier, i.e., a number compatible with the E.164 standard. Then, block **450** of FIG. **18**B directs the processor (**232**) to generate a routing message identifying a gateway to the public network usable by the call controller (**13**) to establish a "public system" call. In one embodiment, block **450** includes codes that, for example, direct the processor (**232**) to search a database of route or master list records and to search a database of supplier records to identify at least one supplier operable to supply a communications link for the call, and to load a routing message buffer with supplier information, time to live values, and timeout values. An example of an implementation of these steps is described with reference to blocks **410**, **412**, **560**, **562**, **563**, **564**, **566**, and **571** in FIGS. **8**B and **8**D in PCT Publication No. WO 2008/052340. Next, block **452** directs the processor **232** of FIG. **10** to send the routing message to the call controller **13** in FIG. **1**, and the process ends.

Calls to Subscribers within the Same Node

Referring back to FIG. **18**A, if at block **406**, the prefix of the username of the callee matches the node identifier associated with the gateway (**18**), then the call is on one domain, and block **454** directs the processor (**232**) to use the callee identifier in the callee identifier store **246** illustrated in FIG. **8** (which, at block **404**, was set to be a username of the callee) to locate and retrieve a dialing profile for the callee. The dialing profile may be of the type shown in FIG. **9**, for example. Block **456** of FIG. **18**A then directs the processor **232** of FIG. **8** to get call block, call forward, and voicemail records from the database **23** of FIG. **1**, based on the username identified in the callee dialing profile retrieved by the processor at block **454**. Exemplary call block, call forward, and voicemail records are described in PCT Publication No. WO 2008/052340.

Then block **458** directs the processor **232** of FIG. **8** to determine whether or not the caller identifier received in the RC request message matches a block pattern stored in the call block record associated with the callee and retrieved at block **454**. If the caller identifier matches a block pattern, then block **460** directs the processor to send a drop call or non-completion message to the call controller (**13**) and the process is ended. If the caller identifier does not match a block pattern associated with the callee, then block **462** directs the processor (**232**) to determine whether or not call forwarding is required, as described in PCT Publication No. WO 2008/052340.

If at block **462**, the call forwarding record for the callee indicates that no call forwarding is required, then the processor (**232**) is directed to block **464**, which directs the processor (**232**) to generate a routing message identifying an address on the private network, associated with the callee for a "private system" call. In one embodiment, block **464** includes codes that, for example, direct the processor (**232**) to store, in a routing message buffer, a username and domain of the callee, time to live values, and an IP address of the current node, to determine whether or not the user identified by the callee identifier has paid for voicemail service and if so, to store voicemail information in the routing message buffer. An example of an implementation of these steps is described with reference to blocks **609**, **620**, **640**, **642**, and **644** in FIGS. **8**A and **8**C in PCT Publication No. WO 2008/052340, which is incorporated herein by reference. Next, block **466** directs the processor **232** of FIG. **8** to cause the routing message to be sent to the call controller **13** in FIG. **1**, and the process ends.

But if at block **462**, the call forwarding record for the callee indicates that call forwarding is required, then block **468** directs the processor (**232**) to search a dialing profile table to find a dialing profile record as shown in FIG. **9**, for the user identified by the destination number field of the call forward record, as illustrated in PCT Publication No. WO 2008/052340. The processor (**232**) is further directed to store the username and domain for that user and a time to live value in a routing message buffer, an example of which is described in PCT Publication No. WO 2008/052340. This process is repeated for each call forwarding record associated with the callee identified by the callee identifier store **246** in FIG. **8** to add to the routing message buffer all call forwarding usernames and domains associated with the callee.

Referring to FIGS. **1**, **18**A, and **18**C, the routing message sent at one of blocks **412**, **452**, and **466** is received at the call controller **13** and the call controller interprets the receipt of the routing message as a request to establish a call. Referring to FIG. **15**, the program memory **324** of the call controller **13** includes a routing to gateway routine depicted generally at **346**.

Where a routing message received at the call controller **13** is of the type produced at block **464** shown in FIG. **18**A, indicating that the callee is a system subscriber on the same node as the gateway (**18**) (such as a user of the VoIP telephone **36** illustrated in FIG. **1**), the routing to gateway routine **346** may direct the microprocessor **322** to cause a message to be sent back through the IP network **26** shown in FIG. **1** to the VoIP telephone (**36**), using the IP address of the VoIP telephone (**36**) that is available from the callee username.

T-Mobile Exhibit 1001

Alternatively, if the routing message received at the call controller **13** is of the type produced at block **410** shown in FIG. **18**A, identifying a domain associated with another node in the system, the call controller **13** may send a SIP invite message along the high speed/high data throughput link **17** in communication with the other node. The other node may function as explained above and in PCT Publication No. WO 2008/052340, in response to receipt of a SIP invite message.

If the routing message received at the call controller **13** is of the type produced at block **450** shown in FIG. **18**C, indicating that the callee is not a subscriber to the system (such as a user of the PSTN telephone **32** that is in communication with the IP network **26** through the gateway **34** as illustrated in FIG. **1**), the call controller sends one or more SIP invite messages to the suppliers identified in the routing message to identify the IP address of a supplier that is able to carry the call, such as the IP address of the gateway **34** illustrated in the example of FIG. **1**. A process for identifying the IP address of a supplier that is able to carry the call is given in PCT Publication No. WO 2008/052340, which is incorporated herein by reference. In some cases, the gateway of the supplier that is able to carry the call will be the gateway **18** illustrated in FIG. **1**, that is, the same gateway through which the caller telephone (**12**) initiated the call. For simplicity, the following description assumes that the gateways **18** and **34** are distinct gateways. It will be understood that in some cases, they may be the same gateway, but in these cases, the following steps may still be applied.

Referring to FIG. **1**, the IP address of the gateway **34** is sent in a message from the call controller **13** to the media relay **28**, which responds with a message indicating an IP address to which the gateway **18** should send its audio/video traffic, and an IP address to which the gateway **34** should send its audio/video for the call. The call controller conveys the IP address at which the media relay **28** expects to receive audio/video from the gateways **18** and **34**, to the gateways **18** and **34** in one or more messages. The gateway **18** replies to the call controller **13** with an IP address at which it would like to receive audio/video, and the call controller conveys that IP address to the media relay **28**. The call may then be conducted between the caller and callee through the media relay **28** and the gateways **18** and **34**.

If the call controller **13** receives a routing message of the type produced at block **464** shown in FIG. **18**A, indicating that the callee is a system subscriber on the same node as the gateway (**18**) (such as a user of the VoIP telephone **36** illustrated in FIG. **1**), and which has at least one call forwarding number and/or a voicemail number, the call controller attempts to establish a call to the callee VoIP telephone **36** by seeking from the callee telephone a message indicating an IP address to which the media relay **28** should send audio/video. If no such message is received from the callee telephone, no call is established. If no call is established within a predetermined time, the call controller **13** attempts to establish a call with the next user identified in the call routing message in the same manner. This process is repeated until all call forwarding possibilities have been exhausted, in which case the call controller communicates with the voicemail server **19** identified in the routing message to obtain an IP address to which the media relay **28** should send audio/video and the remainder of the process mentioned above for establishing IP addresses at the media relay and the caller telephone is carried out to establish audio/video paths to allowing the caller to leave a voicemail message with the voicemail server.

When an audio/video path through the media relay **28** is established, a call timer maintained by the call controller **13** preferably logs the start date and time of the call and logs the call ID and an identification of the route (i.e., audio/video path IP address) for later use in billing.

Terminating the Call

Referring back to FIG. **1**, in the event that the caller terminates a call, the gateway **18** sends a SIP bye message to the call controller **13**. Similarly, in the event that the callee terminates the call, the gateway **34** or the VoIP telephone **36** of the callee sends a SIP bye message to the call controller **13**. Exemplary SIP bye messages are described in PCT Publication No. WO 2008/052340. The SIP bye message is received at the call controller **13**, and the call controller executes a process that involves decrementing the contents of the current number of concurrent calls field **222** dialing profile **200** of the caller as illustrated in FIG. **9**, generating an RC call stop message (not shown), sending the RC call stop message to the routing controller **30**, and sending a "bye" message to the party that did not terminate the call. An exemplary RC call stop message, and an example of how these steps may be implemented, are described in PCT Publication No. WO 2008/052340, which is incorporated herein by reference.

When the routing controller **30** receives the RC call stop message from the call controller **13**, the routing controller executes an RC call stop message process that involves making various updates to subscriber, reseller, and supplier account records (not shown) following the call. Examples of subscriber, reseller, and supplier account records, and of updates to subscriber, reseller, and supplier account records, are described in PCT Publication No. WO 2008/052340, which is incorporated herein by reference.

While specific embodiments of the invention have been described and illustrated, such embodiments should be considered illustrative of the invention only and not as limiting the invention.

What is claimed is:

1. A method of roaming with a mobile telephone, the method comprising:

receiving, from a user of the mobile telephone, a callee identifier associated with the callee;

transmitting an access code request message to an access server to seek an access code from a pool of access codes wherein each access code in said pool of access codes identifies a respective telephone number or Internet Protocol (IP) network address that enables a local call to be made to call the callee identified by the callee identifier, said access code request message including said callee identifier and a location identifier separate and distinctive from said callee identifier, said location identifier identifying a location of the mobile telephone;

receiving an access code reply message from the access server in response to said access code request message, said access code reply message including an access code different from said callee identifier and associated with said location identifier and/or associated with a location pre-associated with the mobile telephone and wherein said access code expires after a period of time; and

initiating a call with the mobile telephone using said access code to identify the callee.

2. The method of claim **1** wherein transmitting comprises transmitting said access code request message to said access server on a non-voice network.

3. The method of claim **1** wherein transmitting said location identifier comprises transmitting an IP address of the mobile telephone in a wireless IP network.

4. The method of claim **1** wherein transmitting said location identifier comprises transmitting an identifier of a wireless voice signal station in wireless communication with the mobile telephone.

T-Mobile Exhibit 1001

5. The method of claim 1 wherein transmitting said location identifier comprises transmitting a user-configured identifier of a location associated with the mobile telephone.

6. The method of claim 1 wherein receiving said access code reply message comprises receiving said access code reply message from said access server on a non-voice network.

7. The method of claim 1 wherein receiving said access code reply message comprises receiving, in said access code reply message, an access code temporarily associated with said callee identifier.

8. The method of claim 1 wherein receiving said access code reply message comprises receiving, in said access code reply message, a telephone number identifying a channel operably configured to cooperate with an IP network to cause a call involving the mobile telephone and the callee to be routed through the IP network.

9. The method of claim 8 wherein initiating said call comprises engaging a routing controller to route said call on said IP network to the callee.

10. The method of claim 1 further comprising:

receiving from the mobile telephone said access code request message;

communicating with a routing controller to obtain from the routing controller said access code wherein said access code identifies a communications channel associated with said location identifier and wherein said access code is useable by the mobile telephone to cause the routing controller to establish a call to the callee using the channel; and

transmitting said access code reply message to the mobile telephone.

11. A mobile telephone apparatus comprising:

means for receiving, from a user of the mobile telephone, a callee identifier associated with the callee;

transmitting means for transmitting an access code request message to an access server to seek an access code from a pool of access codes wherein each access code in said pool of access codes identifies a respective telephone number or Internet Protocol (IP) network address that enables a local call to be made to call the callee identified by the callee identifier, said access code request message including said callee identifier and a location identifier separate and distinctive from said callee identifier, said location identifier identifying a location of the mobile telephone;

means for receiving an access code reply message from the access server in response to said access code request message, said access code reply message including an access code different from said callee identifier and associated with said location identifier and/or associated with a location pre-associated with the mobile telephone and wherein said access code expires after a period of time; and

means for initiating a call using said access code to identify the callee.

12. The mobile telephone apparatus of claim 11 wherein said transmitting means comprises a non-voice network interface for transmitting said access code request message to said access server on a non-voice network.

13. The mobile telephone apparatus of claim 11 wherein said location identifier comprises an IP address of the mobile telephone in a wireless IP network.

14. The mobile telephone apparatus of claim 11 wherein said location identifier comprises an identifier of a wireless voice signal station in wireless communication with the mobile telephone.

15. The mobile telephone apparatus of claim 11 wherein said location identifier comprises a user-configured identifier of a location associated with the mobile telephone.

16. The mobile telephone apparatus of claim 11 wherein said means for receiving an access code reply message comprises a non-voice network interface for receiving said access code reply message on a non-voice network.

17. The mobile telephone apparatus of claim 11 wherein said access code includes a telephone number.

18. The mobile telephone apparatus of claim 11 wherein said means for initiating comprises a mobile telephone network interface.

19. A system for enabling roaming by a mobile telephone, the system comprising the mobile telephone apparatus of claim 11 and further comprising:

a routing controller; and

an access server comprising:

means for receiving from the mobile telephone said access code request message;

means for communicating with said routing controller to obtain from said routing controller said access code wherein said access code identifies a channel associated with said location identifier and wherein said access code is useable by the mobile telephone to cause the routing controller to establish a call to the callee using the channel; and

means for transmitting said access code reply message including said access code to the mobile telephone.

20. A mobile telephone apparatus comprising:

a processor circuit;

a network interface in communication with said processor circuit; and

a computer readable medium in communication with said processor circuit and encoded with codes for directing said processor circuit to:

receive, from a user of the mobile telephone, a callee identifier associated with the callee;

cause an access code request message to be transmitted to an access server to seek an access code from a pool of access codes wherein each access code in said pool of access codes identifies a respective telephone number or Internet Protocol (IP) network address that enables a local call to be made to call the callee identified by the callee identifier, said access code request message including said callee identifier and a location identifier separate and distinctive from said callee identifier, said location identifier identifying a location of the mobile telephone;

receive an access code reply message from the access server in response to said access code request message, said access code reply message including an access code different from said callee identifier and associated with said location identifier and/or associated with a location pre-associated with the mobile telephone and wherein said access code expires after a period of time; and

initiate a call using said access code to identify the callee.

21. The mobile telephone apparatus of claim 20 wherein said network interface comprises a non-voice network interface, and wherein said codes for directing said processor circuit to cause said access code request message to be transmitted include codes for directing said processor circuit to cause said access code request message to be transmitted to said access server using said non-voice network interface on a non-voice network.

22. The mobile telephone apparatus of claim 20 wherein said location identifier comprises an IP address of the mobile telephone in a wireless IP network.

T-Mobile Exhibit 1001

23. The mobile telephone apparatus of claim **20** wherein said location identifier comprises an identifier of a wireless voice signal station in wireless communication with the mobile telephone.

24. The mobile telephone apparatus of claim **20** wherein said location identifier comprises a user-configured identifier of a location associated with the mobile telephone.

25. The mobile telephone apparatus of claim **20** wherein said network interface comprises a non-voice network interface, and wherein said codes for directing said processor circuit to receive an access code reply message include codes for directing said processor circuit to cause said access code reply message to be received from said access server using said non-voice network interface on a non-voice network.

26. The mobile telephone apparatus of claim **20** wherein said access code includes a telephone number identifying a channel operably configured to cooperate with an IP network to cause a call involving the mobile telephone and the callee to be routed through the IP network.

27. The mobile telephone apparatus of claim **20** wherein said network interface comprises a mobile telephone network interface, and wherein said codes for directing said processor circuit to initiate include codes for directing said processor circuit to cause a call to be initiated using said mobile telephone network interface on a mobile telephone network.

28. A system for enabling roaming by a mobile telephone, the system comprising the mobile telephone of claim **20** and further comprising:

a routing controller; and

an access server comprising a processor circuit and a computer readable medium in communication with the processor circuit, the computer readable medium encoded with codes for directing said processor circuit to:

receive from the mobile telephone said access code request message;

communicate with said routing controller to obtain from said routing controller said access code wherein said access code identifies a channel associated with said location identifier and wherein said access code is useable by the mobile telephone to cause the routing controller to establish a call to the callee using the channel; and

transmit said access code reply message to the mobile telephone.

29. A non-transitory computer readable medium encoded with codes for directing a processor circuit to enable mobile telephone roaming, said codes being operable to direct the processor circuit to:

receive, from a user of a mobile telephone, a callee identifier associated with a callee;

transmit an access code request message to an access server to seek an access code from a pool of access codes telephone wherein each access code in said pool of access codes identifies a respective telephone number or Internet Protocol (IP) network address to enable a local call to be made to call the callee identified by the callee identifier, said access code request message including said callee identifier and a location identifier separate and distinctive from said callee identifier, said location identifier identifying a location of the mobile telephone;

receive an access code reply message from the access server in response to said access code request message, said access code reply message including an access code different from said callee identifier and associated with said callee location identifier and/or associated with a location pre-associated with the mobile telephone and wherein said access code expires after a period of time; and

initiate a call using said access code to identify the callee.

30. A method for enabling mobile telephone roaming, the method comprising:

receiving from the mobile telephone an access code request message including a callee identifier associated with the callee and a location identifier separate and distinctive from said callee identifier, identifying a location of the mobile telephone;

producing an access code identifying a communication channel based on said location identifier and/or based on a location pre-associated with the mobile telephone, said access code being different from the callee identifier and useable by the mobile telephone to initiate a call to the callee using the channel, and wherein said access code expires after a period of time and wherein producing said access code comprises selecting said access code from a pool of access codes, wherein each access code in said pool of access codes identifies a respective telephone number or Internet Protocol (IP) network address; and

transmitting an access code reply message including said access code, to the mobile telephone.

31. The method of claim **30** wherein receiving comprises receiving said access code request message on a non-voice network.

32. The method of claim **30** wherein producing said access code comprises causing a routing controller operably configured to route a call between said caller and said callee to produce said access code.

33. The method of claim **30** further comprising determining from said location identifier a local calling area associated with the mobile telephone and selecting an access code associated with a calling area matching said local calling area associated with the mobile telephone.

34. The method of claim **33** further comprising accessing a location field of a dialing profile associated with the caller when a local calling area cannot be determined from the contents of said location identifier and determining a local calling area associated with the mobile telephone from the contents of said location field and selecting an access code associated with a calling area matching the local calling area associated with the mobile telephone.

35. The method of claim **30** wherein said location identifier comprises an IP address of the mobile telephone in a wireless IP network.

36. The method of claim **30** wherein said location identifier comprises an identifier of a wireless voice signal station in wireless communication with the mobile telephone.

37. The method of claim **30** wherein said location identifier comprises a user-configured identifier of a location associated with the mobile telephone.

38. The method of claim **30** wherein at least one of said access codes in said pool of access codes identifies an IP network address as a possible channel through which said call can be conducted.

39. The method of claim **38** further comprising enabling communications between said caller and said callee to be established through an IP network in response to a call received at said IP network address.

40. The method of claim **30** wherein said access code request message includes a caller identifier and wherein the method further comprises associating said caller identifier included in said access code request message with the selected access code.

T-Mobile Exhibit 1001

41. The method of claim **40** further comprising associating said callee identifier included in said access code request message with the selected access code.

42. The method of claim **41** wherein said associating said caller identifier and said callee identifier with the selected access code occurs only when:

a) the access code is not already associated with a callee id; or

b) the access code is already associated with a callee id, and a timeout value associated with that callee id has expired.

43. The method of claim **30** wherein producing further comprises associating a timestamp with said access code, for use in determining when the usability of said access code to initiate a call to the callee will expire, and causing said timestamp to be included in said access code reply message transmitted to the mobile telephone.

44. The method of claim **43** further comprising enabling communications to be established between said caller and said callee when the mobile telephone seeks to establish a call to said callee using the access code transmitted in the access code reply message when said timestamp associated with said access code indicates the usability of said access code has not expired and not enabling said communications to be established when said timestamp indicates the usability of said access code has expired.

45. The method of claim **30** wherein transmitting comprises transmitting said access code reply message on a non-voice network.

46. A system for enabling mobile telephone roaming, the system comprising:

means for receiving from the mobile telephone an access code request message including a callee identifier associated with the callee and a location identifier separate and distinctive from said callee identifier, identifying a location of the mobile telephone;

means for producing an access code identifying a communication channel based on said location identifier and/or based on a location pre-associated with the mobile telephone, said access code being different from the callee identifier and useable by the mobile telephone to initiate a call to the callee using the channel and wherein said access code expires after a period of time and wherein said means for producing said access code comprises means for selecting said access code from a pool of access codes wherein each access code in said pool of access codes identifies a respective telephone number or Internet Protocol (IP) network address; and

means for transmitting an access code reply message including said access code to the mobile telephone.

47. The system of claim **46** wherein said means for receiving comprises a non-voice network interface for receiving said access code request message on a non-voice network.

48. The system of claim **46** wherein said means for producing said access code comprises a routing controller operably configured to route a call between said caller and said callee.

49. The system of claim **46** wherein said processor circuit is operably configured to determine a local calling area associated with the mobile telephone from said location identifier and to select an access code associated with a calling area matching said local calling area associated with the mobile telephone.

50. The system of claim **49** further comprising:

a dialing profile associated with the caller, said dialing profile including a location field; and

wherein said processor circuit is operably configured to determine a local calling area associated with the mobile telephone from the contents of said location field and to select an access code associated with a calling area matching the local calling area associated with the mobile telephone, when a local calling area associated with the mobile telephone cannot be determined from said location identifier.

51. The system of claim **46** wherein said location identifier includes an IP address of the mobile telephone in a wireless IP network.

52. The system of claim **46** wherein said location identifier includes an identifier of a wireless voice signal station in wireless communication with the mobile telephone.

53. The system of claim **46** wherein said location identifier includes a user-configured identifier of a location associated with the mobile telephone.

54. The system of claim **46** wherein at least one of said access codes in said pool of access codes identifies an IP network address as a possible channel through which said call can be conducted.

55. The system of claim **46** wherein said processor circuit is operably configured to enable communications between said caller and said callee to be established through an IP network in response to a call received at said IP network address.

56. The system of claim **46** wherein said access code request message includes a caller identifier and wherein said processor circuit is operably configured to associate said caller identifier with the selected access code.

57. The system of claim **56** wherein said processor circuit is operably configured to associate said callee identifier included in said access code request message with the selected access code.

58. The system of claim **57** wherein said processor circuit is operably configured to associate said caller identifier and said callee identifier with the selected access code only when:

a) the access code is not already associated with a callee id; or

b) the access code is already associated with a callee id, and a timeout value associated with that callee id has expired.

59. The system of claim **46** wherein said processor circuit is operably configured to associate a timestamp with said access code, for use in determining when the usability of said access code to initiate a call to the callee will expire, and to cause said timestamp to be included in said access code reply message transmitted to the mobile telephone.

60. The system of claim **59** wherein said processor circuit is operably configured to enable communications to be established between said caller and said callee when the mobile telephone seeks to establish a call to said callee using the access code transmitted in the access code reply message when said timestamp associated with said access code indicates the usability of said access code has not expired and to prevent said communications from being established when said timestamp indicates the usability of said access code has expired.

61. The system of claim **46** wherein said means for transmitting comprises a non-voice network interface for transmitting said access code reply message on a non-voice network.

62. A system for enabling mobile telephone roaming, the system comprising:

a processor circuit;

a network interface in communication with said processor circuit; and

a computer readable medium in communication with said processor circuit and encoded with codes for directing said processor circuit to:

receive from the mobile telephone an access code request message including a callee identifier associated with the callee and a location identifier separate and distinctive from said callee identifier, identifying a location of the mobile telephone;

communicate with a routing controller to obtain from said routing controller an access code identifying a communication channel, said access code being determined from said location identifier and/or based on a location pre-associated with the mobile telephone and said access code being different from the callee identifier and useable by the mobile telephone to initiate a call to the callee using the channel, and wherein said access code expires after a period of time and wherein said access code is selected from a pool of access codes and wherein each access code in said pool of access codes identifies a respective telephone number or Internet Protocol (IP) network address; and

cause an access code reply message including said access code to be transmitted to the mobile telephone.

63. The system of claim **62** wherein said network interface comprises a non-voice network interface, and wherein said codes for directing said processor circuit to receive include codes for directing said processor circuit to cause said access code request message to be received using said non-voice network interface on a non-voice network.

64. The system of claim **62** wherein said codes for directing said processor circuit include codes for directing said processor circuit to cause a routing controller to produce said access code.

65. The system of claim **62** wherein said codes for directing said processor circuit include codes for directing said processor circuit to determine from said location identifier a local calling area associated with the mobile telephone and to select an access code associated with a calling area matching said local calling area associated with the mobile telephone.

66. The system of claim **65** wherein said codes for directing said processor circuit include codes for directing said processor circuit to access a location field of a dialing profile associated with the caller when a local calling area cannot be determined from the contents of said location identifier and determine a local calling area associated with the mobile telephone from the contents of said location field and select an access code associated with a calling area matching the local calling area associated with the mobile telephone.

67. The system of claim **62** wherein said location identifier comprises an IP address of the mobile telephone in a wireless IP network.

68. The system of claim **62** wherein said location identifier comprises an identifier of a wireless voice signal station in wireless communication with the mobile telephone.

69. The system of claim **62** wherein said location identifier comprises a user-configured identifier of a location associated with the mobile telephone.

70. The system of claim **62** wherein at least one of said access codes in said pool of access codes identifies an IP network address as a possible channel through which said call can be conducted.

71. The system of claim **70** wherein said codes for directing said processor circuit include codes for directing said processor circuit to enable communications between said caller and said callee to be established through an IP network in response to a call received at said IP network address.

72. The system of claim **62** wherein said access code request message includes a caller identifier and wherein said codes for directing said processor circuit include codes for directing said processor circuit to associate said caller identifier included in said access code request message with the selected access code.

73. The system of claim **72** wherein said codes for directing said processor circuit include codes for directing said processor circuit to associate said callee identifier included in said access code request message with the selected access code.

74. The system of claim **73** wherein said codes for directing said processor circuit include codes for directing said processor circuit to associate said caller identifier and said callee identifier with the selected access code only when:

a) the access code is not already associated with a callee id; or

b) the access code is already associated with a callee id, and a timeout value associated with that callee id has expired.

75. The system of claim **62** wherein said codes for directing said processor circuit include codes for directing said processor circuit to associate a timestamp with said access code, for use in determining when the usability of said access code to initiate a call to the callee will expire, and to cause said timestamp to be included in said access code reply message.

76. The system of claim **75** wherein said codes for directing said processor circuit include codes for directing said processor circuit to enable communications to be established between said caller and said callee when the mobile telephone seeks to establish a call to said callee using the access code transmitted in the access code reply message when said timestamp associated with said access code indicates the usability of said access code has not expired and to prevent said communications from being established when said timestamp indicates the usability of said access code has expired.

77. The system of claim **62** wherein said network interface comprises a non-voice network interface, and wherein codes for directing said processor circuit to transmit include codes for directing said processor circuit to cause said access code reply message to be transmitted using said non-voice network interface on a non-voice network.

78. A non-transitory computer readable medium encoded with codes for directing a processor circuit to enable mobile telephone roaming, the codes being operable to direct the processor circuit to:

receive from the mobile telephone an access code request message including a callee identifier associated with the callee and a location identifier separate and distinctive from said callee identifier, identifying a location of the mobile telephone;

communicate with a routing controller to obtain from said routing controller an access code identifying a communication channel, based on said location identifier and/or based on a location pre-associated with the mobile telephone, said access code being different from the callee identifier and useable by the mobile telephone to initiate a call to the callee using the channel, and wherein said access code expires after a period of time and wherein said access code is selected from a pool of access codes, wherein each access code in said pool of access codes identifies a respective telephone number or Internet Protocol (IP) network address; and

cause an access code reply message including said access code to be transmitted to the mobile telephone.

* * * * *

UNITED STATES PATENT AND TRADEMARK OFFICE

CERTIFICATE OF CORRECTION

PATENT NO. : 8,630,234 B2
APPLICATION NO. : 13/056277
DATED : January 14, 2014
INVENTOR(S) : Bjorsell et al.

It is certified that error appears in the above-identified patent and that said Letters Patent is hereby corrected as shown below:

In the Drawings

Sheet 10 of 17 (Reference Numeral 274, Fig. 12) at line 3, Change "indentifier?" to --identifier?--.

Sheet 11 of 17 (Reference Numeral 316, Fig. 14) at line 1, Change "Identifer" to --Identifier--.

In the Claims

Column 37 line 67, Claim 29, Change "said callee location" to --said location--.

Signed and Sealed this
Fourteenth Day of October, 2014

Michelle K. Lee

Michelle K. Lee
Deputy Director of the United States Patent and Trademark Office