UNITED STATES PATENT AND TRADEMARK OFFICE

BEFORE THE PATENT TRIAL AND APPEAL BOARD

META PLATFORMS, INC.,
Petitioner

v.

VOIP-PAL.COM, INC.,
(Alleged) Patent Owner

U.S. PATENT NO. 10,880,721

Case IPR2022-01235

DECLARATION OF DR. VIJAY MADISETTI IN SUPPORT OF PETITION FOR *INTER PARTES* REVIEW UNDER 35 U.S.C. §312 AND 37 C.F.R. §42.104

T-Mobile Exhibit 1003

TABLE OF CONTENTS

I. INTRODUCTION 6

II. QUALIFICATIONS 6

III. UNDERSTANDING OF PATENT LAW 13

IV. OVERVIEW OF OPINION 18

V. THE `721 PATENT 19

A. Priority Date 19

B. Technology Overview 20

C. Person of Ordinary Skill in the Art 24

VI. CLAIM CONSTRUCTION 26

A. Agreed Constructions 26

B. "gateway" (Claims 51, 77, 103, 133) 27

C. "means for causing a routing controller to produce an access code" (Claim 77) 29

D. Other Terms 29

VII. OVERVIEW OF THE PRIOR ART 30

A. Buckley 30

B. Bates 33

C. Ejzak 35

VIII. SPECIFIC GROUNDS OF OBVIOUSNESS 38

A. Ground I: Claims 51-52, 57, 60, 63, 65, 67, 73, 77, 103-104, 108-110, 124, 130, 133, and 138-139 Are Obvious Over Buckley. 38

1. Claim 51 38
2. Claim 52 54

3. Claim 57 56
4. Claim 60 57
5. Claim 63 58
6. Claim 65 61
7. Claim 67 61
8. Claim 73 62
9. Claim 77 62
10. Claim 103 66
11. Claim 104 68
12. Claim 108 68
13. Claim 109 68
14. Claim 110 69
15. Claim 124 71
16. Claim 130 72
17. Claim 133 75
18. Claim 138 76
19. Claim 139 77

B. Ground II: Claims 63, 109, 130, 133, and 138-139 Are Obvious Over Buckley in View of Ejzak. 77

1. Motivation to Combine.....77
2. Claim 63 82
3. Claim 109 83
4. Claim 130 84
5. Claim 133 85
6. Claim 138 86
7. Claim 139 86

C. Ground III: Claims 51-52, 57, 60, 63, 65, 67, 73, 77, 103-104, 108-110, 124, 130, 133, and 138-139 Are Obvious Over Buckley in view of Bates. 86

1. Motivation to Combine.....86
2. Claim 51 92
3. Claim 52 99
4. Claim 57 99
5. Claim 60 99
6. Claim 63 100
7. Claim 65 100
8. Claim 67 100

T-Mobile Exhibit 1003

9. Claim 73 101
10. Claim 77 101
11. Claim 103 102
12. Claim 104 103
13. Claim 108 103
14. Claim 109 103
15. Claim 110 103
16. Claim 124 104
17. Claim 130 104
18. Claim 133 104
19. Claim 138 105
20. Claim 139 105

D. Ground IV: Claims 63, 109, 130, 133, and 138-139 Are Obvious Over Buckley in View Bates, in Further View of Ejzak. 105

1. Motivation to Combine.....105
2. Claim 63 106
3. Claim 109 106
4. Claim 130 107
5. Claim 133 107
6. Claim 138 107
7. Claim 139 108

IX. SECONDARY CONSIDERATIONS.....108

X. CONCLUSION 108

T-Mobile Exhibit 1003

LIST OF EXHIBITS

Exhibit No.	Description
1001	U.S. Patent No. 10,880,721 (`721 Patent)
1002	File History of U.S. Patent No. 10,880,721(without NPL's and foreign references)
1003	Declaration of Dr. Vijay Madisetti
1004	Curriculum vitae of Dr. Vijay Madisetti
1005	U.S. Patent No. 7,668,159 ("Buckley")
1006	U.S. Patent No. 7,995,565
1007	U.S. Patent No. 6,954,654 ("Ejzak")
1008	U.S. Patent App. Pub. No. 2009/0047922
1009	U.S. Patent No. 8,731,163 ("Bates")
1010	RFC 3261
1011	U.S. Patent No. 7,245,609
1012	Claim Construction Order (Dkt. No. 67) in Case No. 6:21-cv-00668-ADA (W.D. Tex.)
1013	Joint Claim Construction Statement (Dkt. No. 59) in Case No. 3:22-CV-03202 (N.D. Cal)
1014	U.S. Patent Pub. No. 2008/0167039
1015	U.S. Patent Pub. No. 2002/0102973
1016	U.S. Patent No. 8,542,815
1017	Exhibit 2016 in *Apple, Inc. v. VoIP-Pal.com, Inc.*, IPR 2016-01201 (P.T.A.B. Feb. 10, 2017)
1018	Email with attachment from Counsel for Patent Owner Regarding Claim Construction, dated March 2, 2022
1019	"Convergence Technologies for 3G Networks IP, UMTS, EGPRS and ATM", by Jeffery Bannister et al., Wiley, England (2004)

Exhibit No.	Description
1020	IETF RFC 3986, *available at* https://datatracker.ietf.org/doc/html/rfc3986
1021	IETF RFC 2543, *available at* https://datatracker.ietf.org/doc/html/rfc2543
1022	U.S. Patent No. 7,283,507
1023	Excerpts from Microsoft Computer Dictionary, 5th ed. (2002)
1024	Excerpts from Wireless Encyclopedia, Althos Publishing (2007)
1025	International Patent Publication No. WO 01/89145 A2
1026	Excerpt from the File History of U.S. Patent No. 10,880,721 – "Roaming – Wikipedia" (submitted along with IDS on September 24, 2013)

I. INTRODUCTION

1. I have been retained by Meta Platforms, Inc. ("Meta" or "Petitioner") to provide my opinion regarding whether claims 51-52, 57, 60, 63, 65, 67, 73, 77, 103-104, 108-110, 124, 130, 133, and 138-139 ("Challenged Claims") of U.S. Patent No. 10,880,721 (EX1001, the "'721 Patent") would have been obvious to one of ordinary skill in the art, as part of the above-captioned petition of inter partes review (IPR) of the '721 Patent.

2. I am being compensated for my time at my standard hourly consulting rate of $600 per hour. My compensation does not depend on the outcome of this litigation or the opinions I form.

3. In forming my opinions expressed in this declaration, I have relied on my extensive knowledge, training, and experience, as well as all of the materials cited herein.

II. QUALIFICATIONS

4. My qualifications and publications can be found in my Curriculum Vitae, which is Exhibit 1004, along with a listing of the cases in which I have testified as an expert at trial or by deposition within the preceding five years. My background and experience qualify me to offer the opinions offered in this Declaration and are described below.

5. In 1984, I received my Bachelor of Technology (Honors) in Electronics and Electrical Communication Engineering at the Indian Institute of Technology (IIT) in Kharagpur, India. In 1989, I obtained my Ph.D. in Electrical Engineering and Computer Science at the University of California, Berkeley. That year, I also received the Demetri Angelakos Outstanding Graduate Student Award from the University of California, Berkeley, and the IEEE/ACM[1] Ira M. Kay Memorial Paper Prize. I authored several papers and proposals during this time, including "Multilevel Range/NEXT Performance in Digital Subscriber Loops", IEEE Proceedings on Communications, Speech and Vision, Vol 136, Issue 2, April 1989, and "Comparison of Line Codes and Proposal for Modified Duobinary", Contribution T1D1.3-85- 237, American National Standards Institute, November 1985.

6. In 1989, I joined the faculty at Georgia Tech. My first position was an assistant professor position. I became an associate professor in 1995. In 1997, I was awarded the VHSIC Hardware Description Language (or VHDL) International Best Ph.D. Dissertation Advisor for my contributions in the area of rapid prototyping. I became a full professor in 1998 and have maintained that title ever since. As a faculty member at Georgia Tech, I have been an

[1] IEEE is the Institute of Electrical and Electronics Engineers. ACM is the Association for Computing Machinery.

active contributor in several disciplines, including wireless networks, cellular communications, computer engineering, embedded systems, chip design, software systems, and image and video processing.

7. From 1999-2003, I consulted with a team of engineers to design an integrated Soft Switch & Media Server, the SNX 850/8500, that was being sold and installed in Asia. The SNX 8500 was a one-box solution to VOIP, LAN switching, and iPBX/PBX solutions for enterprise customers, and has been installed as part of BPL Telecom's then offerings in Asia. The PBX modules within SNX 850/8500 supported Analog Phones, Digital Feature Phones, E1/ISDN PRI Trunks, E1 or PRI at the PSTN gateway, VOIP (SIP) soft phones, SS7 interfaces, and operated via a browser-based console. It included a variety of features, such as Automatic Call Back, Busy Override, Do Not Disturb, etc., through support for 16 ISDN BRI circuits.

8. Since 1995, I have authored, co-authored, or edited several books in the areas of communications, signal processing, chip design, and software engineering, including VLSI Digital Signal Processors (1st ed. 1995), Quick-Turnaround ASIC Design in VHDL (1st ed. 1996), The Digital Signal Processing Handbook (2d. ed. 2010), Cloud Computing: A Hands-On Approach (1st ed. 2013), Internet of Things: A Hands-On Approach (1st ed. 2014), and Big Data Science & Analytics (1st ed. 2016).

9. Between 1998 and 2004, my students and I studied different codecs and published IETF draft standards[2] on audio and video streaming applications over the internet including: V. Madisetti and A. Argyriou: Voice and Video over Mobile IP Networks, IETF Draft, May 20, 2002; and V. Madisetti and A. Argyriou: A Transport Layer Technology for Improving QoS of Networked Multimedia Applications, IETF Draft July 25, 2002.

10. I have served on the paper-reviewing committees for many leading conferences in my field, and I have taken on editorial roles for leading technical journals in fields pertinent to my research. For example, I served as the Editor-in-Chief of the IEEE Press/CRC Press's three-volume Digital Signal Processing Handbook for Edition 1 (1998) and Edition 2 (2010). I have also authored over 100 articles, reports, and other publications pertaining to electrical engineering, and in the areas of communications, communications signal processing, and computer engineering.

11. Throughout my time at Georgia Tech, I have designed several specialized computer and communication systems for tasks such as wireless, audio, video, and protocol processing for portable platforms (like cell phones and PDAs). I

[2] IETF is the Internet Engineering Task Force.

have also been actively involved in the areas of wireless communication, software engineering, system design methodologies, and software systems.

12. Beyond my work in academia, I have worked in industries relating to speech, audio, and image processing since the early 1980s. I developed efficient algorithms for echo cancellers for speech and voice applications that reduce complexity and improve performance. This work resulted in a peer-reviewed publication called "Dynamically Reduced Complexity Implementation of Echo Cancellers," IEEE ICASSP 96, Tokyo.

13. From 2000-2001, I designed three Global System for Mobiles multiband mobile phones for a leading telecom equipment manufacturer in Asia.

14. From 2000-2007, I designed and provided optimized mobile speech to one of the leading mobile phone and base station manufacturers in the world. This implementation has been deployed on millions of 3G/4G mobile phones and numerous base stations.

15. During that same time frame, I also designed and provided several VOIP codecs to leading VOIP phone vendors that are now deployed in several generations of enterprise VOIP phone products in the USA and abroad. I designed and provided echo cancellers for VOIP applications.

16. From 2002-2007, I developed wireless baseband and protocol stack software and assembly code for a leading telecommunications handset vendor. The

software and code focused on efficient realization of speech codecs and echo-cancellation and optimization of 3G software stack. My work included creating software code and analyzing and revising existing software code.

17. I have also developed speech and video codecs that comply with 3GPP standards.[3] I developed software to implement the associated 3GPP standards and developed tests to verify compliance with these standards. I have also developed several speech and VOIP (voice over Internet Protocol) codecs that conform with the ITU (International Telecommunications Union) standards G.723.1, G.729 and Echo Cancellers conforming with the ITU G.168 standards.

18. The software and code I have developed and tested based on the ITU standards are now used by one of the leading suppliers of VOIP/Internet telephones in the world. This software is also part of commercially released soft switches for internet telephony used extensively in Asia.

19. In addition to my academic and industrial pursuits, I am also a long-standing member of several professional technical organizations. I was the Technical Program Chair for both the IEEE MASCOTS in 1994 and the IEEE Workshop on Parallel and Distributed Simulation in 1990. More recently, I was elected

[3] 3GPP stands for 3rd Generation Partnership Project, a collection of standards organizations that develop protocols for mobile telecommunications.

to the Fellowship of the IEEE because of my contributions to embedded computing systems. Fellows are in the highest tier of membership in the IEEE, a world professional body consisting of over 300,000 electrical and electronics engineers. Only 0.1% of the IEEE membership is elected to the Fellowship each year.

20. I also serve as the official representative from Georgia Tech to the 3GPP/ETSI[4] standards organization. As such, I am familiar with the standard processors for speech, audio and video applications in the context of mobile and wireless communications.

21. Through the past twenty years, I have been retained to test various commercial mobile and wireless products to determine if they comply with various technical standards. I have participated in and contributed to activities of Standards Setting Organizations ("SSOs") such as the IEEE, IETF, ETSI, and others, as part of my work as a teacher and researcher in advanced telecom, wireless, and computer technologies.

22. Over the past three decades, I have studied and designed wireless networking and image and video processing circuits for numerous applications, including

[4] ETSI stands for European Telecommunications Standards Institute.

digital and video cameras, mobile phones, and networking products for leading commercial firms.

III. UNDERSTANDING OF PATENT LAW

23. I am not an attorney, but I have been provided with an understanding of certain legal principles relevant to my analysis and opinions in this matter.

24. I understand that a person of ordinary skill in the art (a "POSITA") is a hypothetical person who is presumed to have known the relevant art at the time of the invention, and that the factors that may be considered in determining the level of ordinary skill in the art may include: (a) type of problems encountered in the art; (b) prior art solutions to those problems; (c) rapidity with which innovations are made; (d) sophistication of the technology; and (e) educational level of active workers in the field. In a given case, every factor may not be present, and one or more factors may predominate.

25. I have been informed that patent claims are construed or interpreted from the perspective of a POSITA at the time of the claimed invention. I understand that the most important evidence to consider in construing the claims is the "intrinsic" evidence. This includes the claim language, the patent's specification, and the prosecution history (including references cited in the prosecution history). I understand that the POSITA must read the claim terms

in the context of the claim and in the context of the entire patent specification. I understand that the patentee may explicitly define a claim term in a way that differs from the plain and ordinary meaning in the art.

26. I further understand that a POSITA may also consider "extrinsic" evidence when interpreting the meaning of claim terms, which are documents and testimony beyond the patent to ensure that a claim is construed consistently with the understanding of those of skill in the art at the time of the claimed invention. I also understand that extrinsic evidence may not be relied on if it deviates from the meaning of the claim provided by the intrinsic evidence.

27. I further understand that inventors may draft their claims as a means or step for performing a specified function, but that they must also disclose in the specification the structure that performs the function, or that claim is indefinite. I also understand that construing a means-plus-function claim requires identifying the claimed function and determining what structure, if any, disclosed in the specification corresponds to the claimed function. I further understand that a term with a computer-implemented function must have a clearly linked structure in the form of an algorithm. I understand that if I cannot identify such an algorithm, the term lacks a clearly linked structure and is therefore indefinite. I further understand that a general purpose

computer cannot be the structure for a computer-implemented function because this amounts to purely functional claiming.

28. I understand that a claim is invalid if it is anticipated or obvious. Anticipation of a claim requires that every element of a claim be disclosed expressly or inherently in a single prior art reference, arranged in the prior art reference as arranged in the claim.

29. It is my understanding that a patent claim is invalid for obviousness if the claimed invention would have been obvious at the time the invention was made to a person having ordinary skill in the art (POSITA).

30. I understand that the following factors are considered in an obviousness analysis: (1) the scope and content of the prior art; (2) the differences between the art and the claims at issue; (3) the level of ordinary skill in the art at the time the invention of the asserted patent was made; and (4) objective evidence of nonobviousness. In order to determine whether claim elements are found in the prior art, it is necessary to compare the properly construed claim language of the patent with the teachings of the prior art.

31. I understand that certain factors-often called “secondary considerations” may support or rebut an assertion of obviousness of a claim. I understand that such secondary considerations include, among other things, commercial success of the alleged invention, skepticism of those having ordinary skill in the art at

the time of the alleged invention, unexpected results of the alleged invention, any long-felt but unsolved need in the art that was satisfied by the alleged invention, the failure of others to make the alleged invention, praise of the alleged invention by those having ordinary skill in the art, and copying of the alleged invention by others in the field. I further understand that there must be a nexus—*i.e.*, a connection—between any such secondary considerations and the alleged.

32. I further understand that a claim can be found obvious if it unites old elements with no change to their respective functions, or alters prior art by mere substitution of one element for another known in the field, with that combination yielding predictable results. While it may be helpful to identify a reason for this combination, common sense should guide, and there is no rigid requirement for a teaching, suggestion, or motivation to combine. For example, design incentives and other market forces can prompt variations of a product, either in the same field or different one. If a person having ordinary skill in the relevant art can implement a predictable variation, obviousness can bar patentability. Similarly, if a technique has been used to improve one device, and a person having ordinary skill in the art would recognize that the technique would improve similar devices in the same way, use of the technique is obvious. I further understand that a claim may be obvious if

common sense directs one to combine multiple prior art references or add missing features to reproduce the alleged invention recited in the claims.

33. I also understand that any one or more of the following rationales may support a finding of obviousness:

- Combining prior art elements according to known methods to yield predictable results;
- Simple substitution of one known element for another to obtain predictable results;
- User of known technique to improve similar devices (methods, or products) in the same way;
- Applying a known technique to a known device (method, or product) ready for improvement to yield predictable results;
- "Obvious to try" - choosing from a finite number of identified, predictable solutions, with a reasonable expectation of success;
- Known work in one field of endeavor may prompt variations of it for use in either the same field or a different on based on design incentives or other market forces if the variations are predictable to one of ordinary skill in the art;
- Some teaching, suggestion, or motivation in the prior art that would have led one of ordinary skill to modify the prior art reference or to combine prior art reference teachings to arrive at the claimed invention.

34. I also understand that it is impermissible to use the claimed invention itself as a blueprint for piecing together elements in the art. In other words, it is impermissible to use hindsight reconstruction to pick and choose among disclosures in the prior art to reconstruct the claimed invention.

IV. OVERVIEW OF OPINION

35. I cite many documents in this declaration in support of my analysis, but my opinion regarding the obviousness of the Challenged Claims is fundamentally based on two references:

- **U.S. Patent No. 7,668,159 ("Buckley") (EX1005)**, filed on August 3, 2007 and granted on February 23, 2010. I understand that, based on Buckley's filing date, it is prior art to the '721 Patent.
- **U.S. Patent No. 6,954,654 ("Ejzak") (EX1007)**, filed on July 31, 2001 and granted on October 11, 2005. I understand that, based on Ejzak's filing date, it is prior art to the '721 Patent.
- **U.S. Patent No. 8,731,163 ("Bates") (EX1009)**, filed on May 9, 2007 and granted on May 20, 2014. I understand that, based on Bates's filing date, it is prior art to the '721 Patent.

36. In my opinion, claims 51-52, 57, 60, 63, 65, 67, 73, 77, 103-104, 108-110, 124, 130, 133, and 138-139 of the '721 Patent would have been obvious to a POSITA over prior art Buckley before February 4, 2008 (see paragraph 39). It is further my opinion that all of the Challenged Claims would have been obvious to a POSITA over prior art Buckley in view of Bates before February 4, 2008. My opinion is summarized in the following table:

Ground	Claims	Analysis
I	51-52, 57, 60, 63, 65, 67, 73, 77, 103-104, 108-110, 124, 130, 133, and 138-139	Obvious under §103 over Buckley
II	63, 130, 133, and 138-139	Obvious under §103 over Buckley in view of Ejzak
III	51-52, 57, 60, 63, 65, 67, 73, 77, 103-104, 108-110, 124, 130, 133, and 138-139	Obvious under §103 over Buckley in view of Bates
IV	63, 130, 133, and 138-139	Obvious under §103 over Buckley in view Bates and further in view of Ejzak

37. As noted above in the Introduction section, for the present assignment, I was only asked to analyze the obviousness of the Challenged Claims, and the scope of my analysis in this declaration is limited to those Challenged Claims. Accordingly, I do not address herein any other claims in the ’721 Patent. No inferences should be drawn from the limited scope of my analysis in this declaration. I have been asked to consider certain other claims in the ’721 Patent, and claims in another related patent, and my opinions with respect to those claims are addressed in separate declarations.

V. THE `721 PATENT

A. Priority Date

38. The `721 Patent issued on December 29, 2020, from U.S. Application No. 14/035,806, filed on September 24, 2013. It claims priority to Provisional

Application No. 61/129,898 (filed on July 28, 2008) and PCT Application No. PCT/CA2009/001062 (filed on July 28, 2009).

39. Although the earliest claimed priority date on the face of the '721 Patent is July 28, 2008, I understand that Patent Owner has contended that "the earliest corroborated date of invention for the '721 [P]atent is February 4, 2008." I have performed my analysis herein assuming that the priority date of the patent is February 4, 2008, although I have not seen any evidence suggesting the invention was in fact conceived at that earlier date, and my opinions herein would not change if the priority date were actually July 28, 2008 (*i.e.*, the earliest priority date appearing on the face of the patent).

B. Technology Overview

40. Traditional Public Switched Telephone Networks (PSTNs) route telephone calls over circuit-switched telephone networks, which are also called "voice" networks. *See* EX1007, 1:19-22. The '721 Patent uses a sequence of messages sent over a "non-voice" network (such as a packet-switched Internet Protocol (IP) network) to route voice calls over an IP network (aka Voice-over-IP or VoIP). EX1001 8:36-42, 9:9-16. As background, "circuit-switched" networks involve a particular, dedicated circuit connection to transmit data (in the form of electrical signals) between the caller and callee. "Packet-switched" networks such as the Internet, on the other hand, break data into small packets

that are separately routed over network connections to the recipient, which reassembles the packets once they are received.

41. The '721 Patent's call routing process begins when a mobile telephone (purple[5] element 12 in Figure 1 below) sends an "access code request message" to an access server (orange element 14) belonging to a telecommunications service provider (such as AT&T). EX1001, 11:51-55. The access code request message includes the intended callee's identifier, such as a telephone number, and the caller's "location identifier." *Id*. 11:66-12-2, 12:20-22. Based on that information in the access code request message, the access server responds with an "access code" in an "access code reply message." *Id*. 12:63-67. The "access code" is a temporary number, such as a local telephone number, used to route the call. *Id*. 13:7-7.

[5] All emphasis and color is added, unless indicated otherwise.

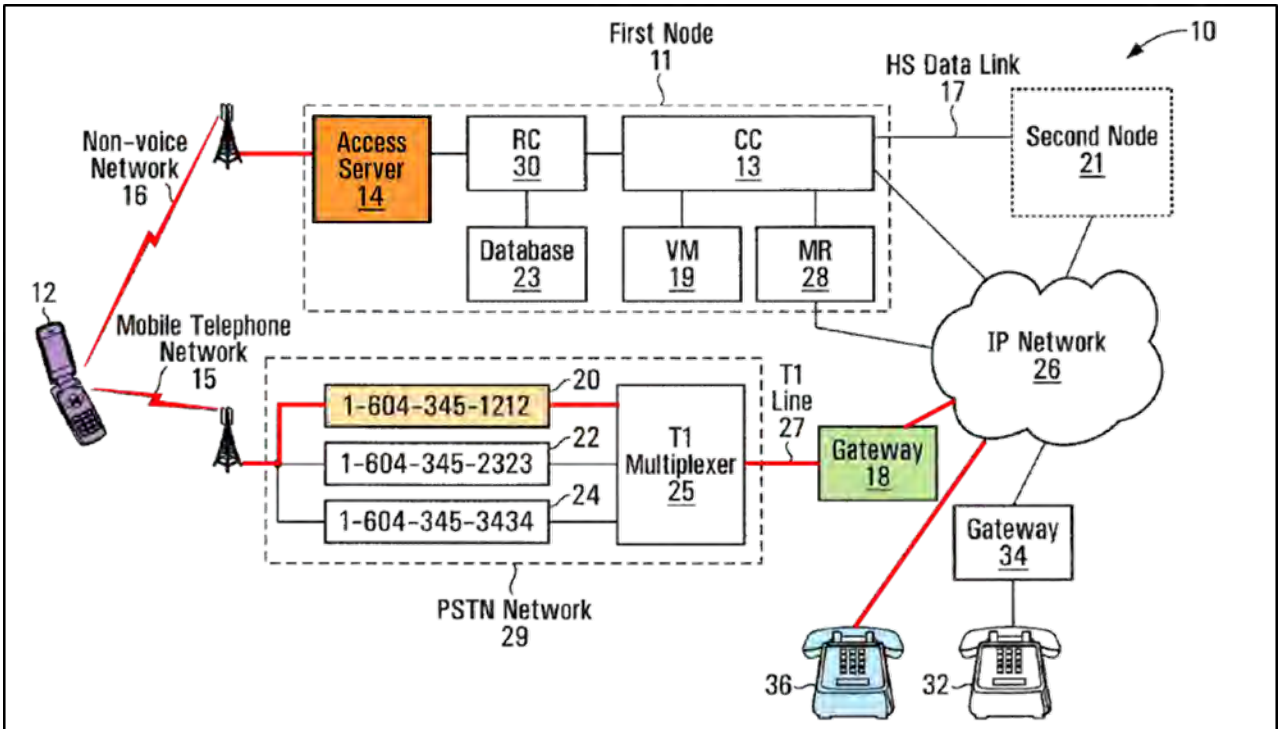

FIG. 1

42. In Figure 1, the "access code" is the temporary telephone number in yellow-highlighted element 20 (*i.e.*, 1-604-345-1212). This temporary number is used to route the call within the phone's home network towards a gateway (green element 18). The gateway bridges the PSTN (element 29) to an IP Network (element 26), so that calls originating or terminating on the PSTN (element 29) can be routed over IP network (element 26) to a callee's IP phone (blue element 36). *Id*. 13:49-56. As was well-known in the art, IP networks such as the Internet do not apply long-distance or roaming charges, so routing a call over such networks in the manner described above avoids such charges. *See, e.g.*, EX1011 (prior art) 1:7-19 ("By moving voice traffic to IP networks,

companies may reduce or eliminate certain toll charges associated with transporting calls over [PSTN]").

43. The access server (element 14) may receive the access code request message "over a non-voice network, such as an internet using WiFi or GPRS technology for example" EX1001 11:58-59. The mobile telephone's location identifier (which is included in the access code request message) may be "an IP address of the mobile telephone [] in a wireless IP network, such as the non-voice network…" *Id*. 12:26-29. The server's access code reply message, which includes the temporary number (access code), may be returned over the non-voice, IP network (element 16). The mobile telephone may then use the access code to initiate a call on the voice network (element 15) that is then routed over the IP Network (element 26).

44. The purported invention is summarized in Figure 3, which depicts the process from the telephone's perspective as found, for example, in claim 1:

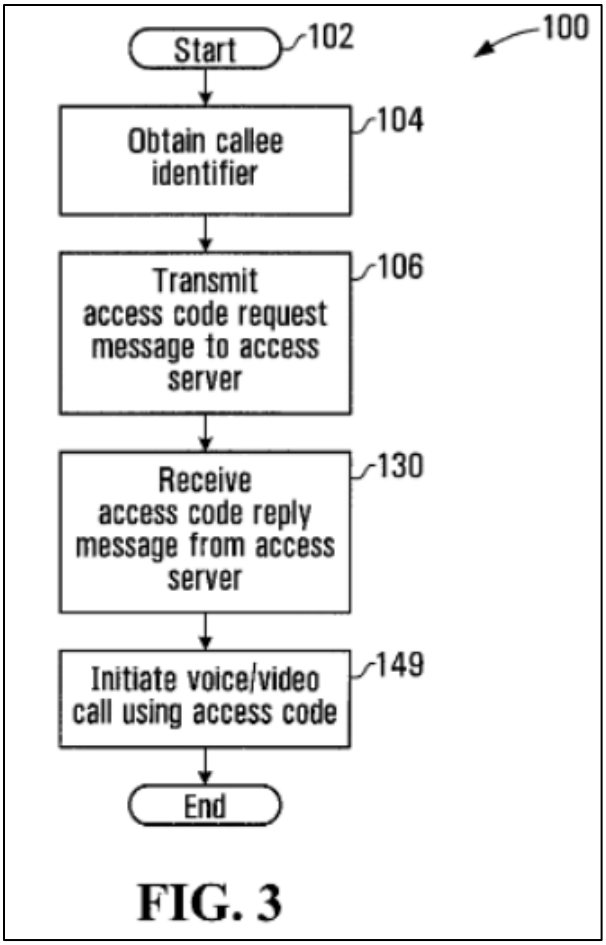

FIG. 3

45. The '721 Patent also contains symmetric claims from the access server's perspective, e.g., in claim 51.

C. Person of Ordinary Skill in the Art

46. In my opinion, a POSITA at the time of the alleged invention described in the Asserted Patent would have had a Bachelor's degree in Computer Science or Electrical Engineering, or an equivalent field, and approximately two years of experience working with networks. Additional education might compensate for less experience, and vice-versa.

47. This level of ordinary skill experience largely aligns with the level of ordinary skill that VoIP-Pal's expert set forth in his declaration in an *inter partes* review of U.S. Patent No. 8,542,815. *See* EX1017 ¶ 14 ("[I]t is my opinion that one of ordinary skill in the art as of the priority date would be someone with an undergraduate degree in either Computer Science, Computer Engineering, Electrical Engineering, or a closely related discipline. Furthermore, I believe that such a person would also have 2 years of experience in system-level software development. In my opinion a greater degree of professional experience could serve to replace some degree of formal education. I also believe that some greater degree of formal education could serve to replace some degree of professional work experience."). The '721 Patent's parent patent applications and the '815 Patent were both originally assigned to Digifonica (International) Limited (as indicated on the face of the patents), share an overlapping named inventor in Johan Emil Viktor Bjorsell, and are in the same field. *Compare* EX1001, 1:10-19 ("1. Field of Invention. This invention relates generally to telecommunication, and more particularly to methods, systems, apparatuses, and computer readable media for initiating or enabling a call with a mobile telephone to a callee. 2. Description of Related Art. Mobile telephone service providers often charge significant fees for long distance telephone calls, particularly when the mobile

telephone is roaming in another mobile telephone service provider's network."), *with* EX1016, 1:11-13 ("1. Field of Invention. This invention relates to voice over IP communications and methods and apparatus for routing and billing.").

48. Based on my education and experience, I am familiar with the level of knowledge that one of ordinary skill would have possessed during the relevant period of time. By the of the earliest possible priority date (February 4, 2008), I was at least a person of ordinary skill in the art, and I am familiar with how persons of ordinary skill in the art would have interpreted the '721 Patent.

VI. CLAIM CONSTRUCTION

A. Agreed Constructions

49. I understand that, in the parallel litigation between the parties, the parties have agreed to the following constructions for certain terms governed by 35 U.S.C. § 112 ¶ 6. I have applied these constructions in my analysis.

Claim Term	Agreed Construction
"means for receiving from the wireless [apparatus/device] [the/an] access code request message" (claims 77)	Function: receiving from the mobile telephone [said/an] access code request message Structure: a network interface

"means for transmitting the access code reply message including the access code to the wireless apparatus" (claims 77)	Function: transmitting [said/an/the] access code reply message including [said/the] access code to the [mobile telephone/wireless apparatus] Structure: a network interface

B. "gateway" (Claims 51, 77, 103, 133)

50. I understand that petitioner has contended the plain and ordinary meaning of "gateway" in the '721 Patent is a "device that connects networks that use different communication protocols." Gateway is defined in the dictionary as: "***A device that connects networks using different communications protocols*** so that information can be passed from one to the other." EX1023, 8 (Microsoft Computer Dictionary (5th ed. 2002)), *see also* EX1024, 9 (Wireless Encyclopedia (1st ed. 2007)), ("A gateway … can ***adjust the protocols and timing between two dissimilar computer systems or data networks***.").

51. Every "gateway" disclosed in the '721 patent specification acts to connect PSTN to IP networks, which use different protocols. *See, e.g.*, EX1001, 23:21-32 (disclosing how gateway's I/O ports interact with PSTN and IP networks). This relationship is depicted, for example, in FIG. 1 where two gateways (items 18 and 34) connect a PSTN (items 29 and 32) to a different IP network

(item 26). Unlike the PSTN telephone (item 32), the VoIP telephone (item 36) does ***not*** use a gateway because it is "directly in communication with the IP network." *Id*., 9:67-10:5 ("A callee identifier associated with one of the channels 20, 22, and 24 may be a telephone number of a ***PSTN telephone 32 that is in communication with the IP network 26 through a gateway 34***, or it may be a telephone number of a ***VoIP telephone 36 that is directly in communication with the IP network*** 26, for example."). Thus, a POSITA would understand the specification requires gateways to connect IP network calls to the Public Switched Telephone Network (PSTN) because those networks use different protocols. *Id*., 32:3-6 ("a gateway to the public network usable by the call controller (13) to establish a 'public system' call").

52. During prosecution, the applicant identified WO 01/89145 ("Foti") as prior art. *See* EX1002, 119-125 (Dec. 23, 2013 IDS). Foti states that "a ***gateway*** provides an ***interface between the circuit-switched network and the packet-switched IP network***," which as described above, are different protocols. EX1025, 11 (Foti), 1:14-15.

53. I further understand a court in W.D. Tex. construed the term substantially similarly to mean "[a] device that connects networks and can adjust a protocol of traffic moving between the connected networks." EX1012.

54. I understand that the Patent Owner has contended this term carries only an unspecified "plain and ordinary meaning," without clarifying what that "plain and ordinary" meaning is. EX1013, 8.

55. In my opinion, the asserted grounds satisfy all of these constructions, as explained below.

C. "means for causing a routing controller to produce an access code" (Claim 77)

56. In my opinion, this term as performing the function of "causing a routing control to produce an access code" and incorporating a structure of "an input/output port for transmitting the access code request message, as received from the wireless device, to the routing controller and for receiving, from the routing controller, the access code reply message" EX1001, 22:53-61, 20:57-22:20, Figs. 8, 10, 12.

57. I understand that Patent Owner has contended the term should instead be construed to incorporate the structure of "Access server 14 and/or routing controller 30." EX1012, 5.

D. Other Terms

58. No other claim terms require construction for purposes of resolving the issues raised in this Petition. The fact that I do not propose additional constructions for purposes of my analysis herein does not, however, imply that I agree that any other term should be construed according to some unspecified "plain and

ordinary" meaning; rather, it means only that no other claim term requires construction for purposes of evaluating the invalidity of the challenged claims in view of the prior art asserted herein.

VII. OVERVIEW OF THE PRIOR ART

A. Buckley

59. Buckley teaches routing PSTN calls over packet-switched networks. *See* EX1005, Abstract. Figure 1 in Buckley depicts example components that may be involved, including: mobile phones (*i.e.* User Equipment (UE) (element 102)); Circuit-Switched (CS) networks (*e.g.* PSTN (element 110)); and Packet-Switched (PS) networks (*e.g.* wireless Local Area Network (WLAN) Broadband Access (element 108) and Internet protocol Multimedia Subsystem (IMS) Core Network (element 112)). *Id*., 3:19-65. As explained below, Buckley teaches Application Servers (AS) (elements 114-1 to 114-N) and associated network entities that perform access code messaging, temporary access code selection, and call routing in the same way as the '234 Patent's access server. *Id*., 3:65-4:62.

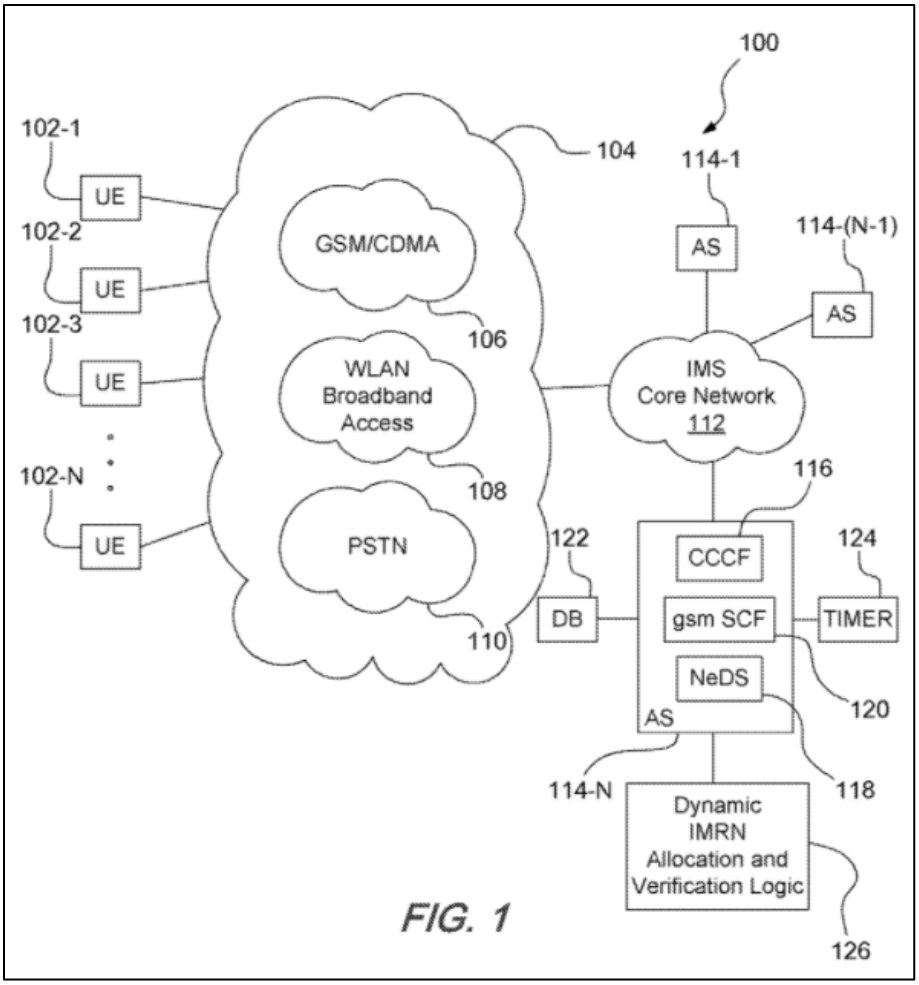

FIG. 1

PSTN, GSM/CDMA, and WLAN Broadband are technologies that allow the UE to access the network. The Public Switched Telephone Network (PSTN) is the technology behind telephony systems based on Circuit-Switched networks. GSM/CDMA are 2nd generation cellular technology that allows UE access to the network. WLAN Broadband is another access technology. *See* EX1019, 11.

60. The analog telephone was invented around 150 years ago and switched to digital telephony systems around 50 years ago. The Internet and TCP/IP

protocols enabled carrying voice and more advanced services over IP. Session Initiation Protocol (SIP) is the IETF's RFC 2543 (EX1021), which defines establishing VoIP connections. SIP defines a control protocol for creating, modifying, and terminating sessions with one or more users. Buckley's AS uses this well-known Session Initiation Protocol (SIP)[6] messaging (access code request and reply messages) to assign a temporary IP Multimedia Routing Number (IMRN) (access code) that allows CS-originated calls to be routed over IMS (IP) networks. *Id*. For example, Figure 3A (excerpted below) depicts this process at a high level, which begins when the calling mobile phone (UE, element 302) sends a SIP Invite message (element 312) to the home AS (network node 308). *Id*., 6:55-63. The AS selects a temporary IMRN from a pool and sends it back to the mobile telephone (UE) in a SIP Response message (element 316). *Id*., 4:31-40, 7:29-42. The UE then uses the IMRN to initiate a call (element 320) that an AS routes to the callee. *Id*., 4:15-40, 7:47-64. The SIP messaging includes caller and callee Uniform Resource Indicators (URI) that identify location. *Id*., 2:62-3:12, 5:18-58, Figures 3A, 3B.

[6] The '234 Patent also uses SIP messaging. EX1001, *e.g.*, 23:4-58, Fig. 14.

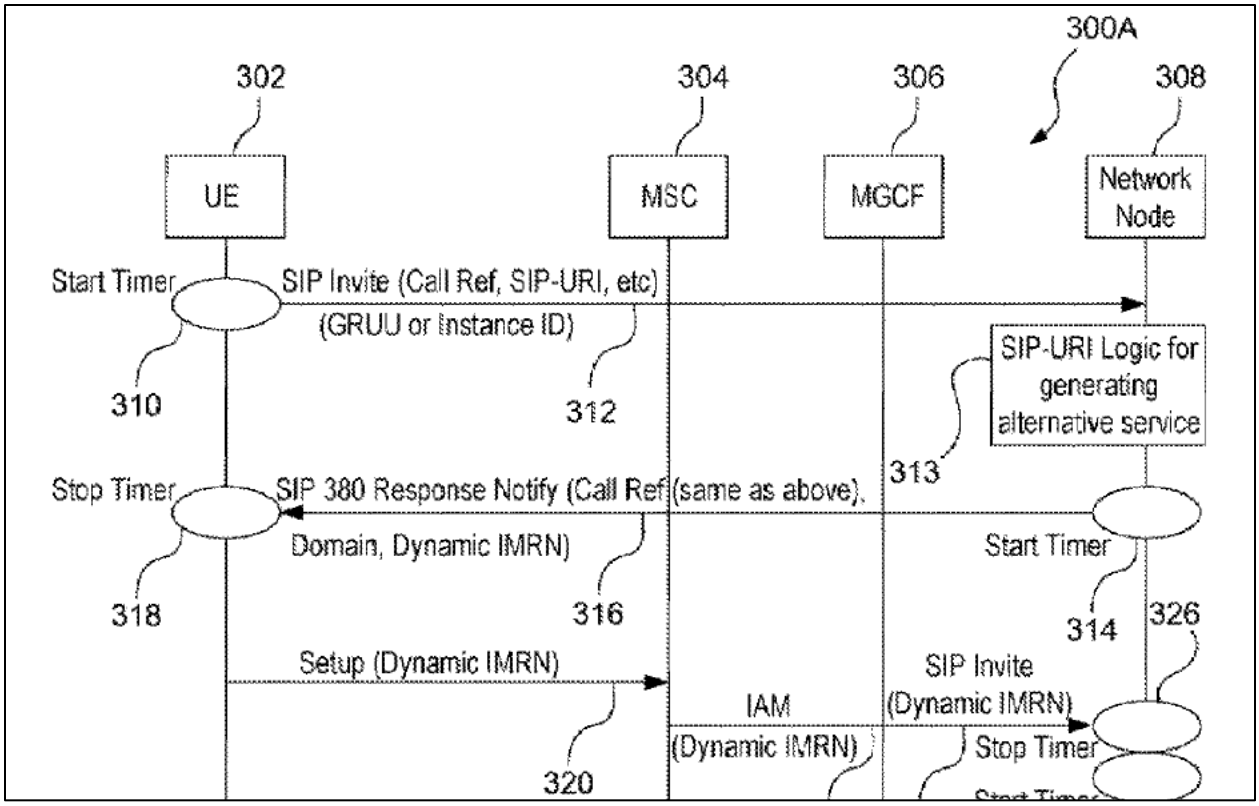

B. Bates

61. Bates teaches a highly similar process of selecting a temporary number for a call. *See* EX1009, Abstract. The temporary number can be used to improve emergency call routing, among other things. *See Id*., 12:25-31. Bates teaches that routing the call to the appropriate Public Safety Answering Point (PSAP) may require a "circuit-switched voice network, [or] a packet-switched data network," where "circuit-switched voice networks may include the PSTN, and packet-switched data networks may include networks based on the Internet protocol (IP)." *Id*. 6:32-38. Bates teaches how to improve such call routing decisions by selecting a temporary number for the call from a pool of

temporary numbers, where the selection is based on the geographic location of a call participant. EX1009, Abstract, 12:25-31, Fig. 7.

62. In Figure 7 of Bates, a mobile telephone initiates a call by sending an access code request message to a Service Provider's node. Based on the mobile telephone's location, a temporary number is selected from a pool of numbers that enable a local call to be made and routed.

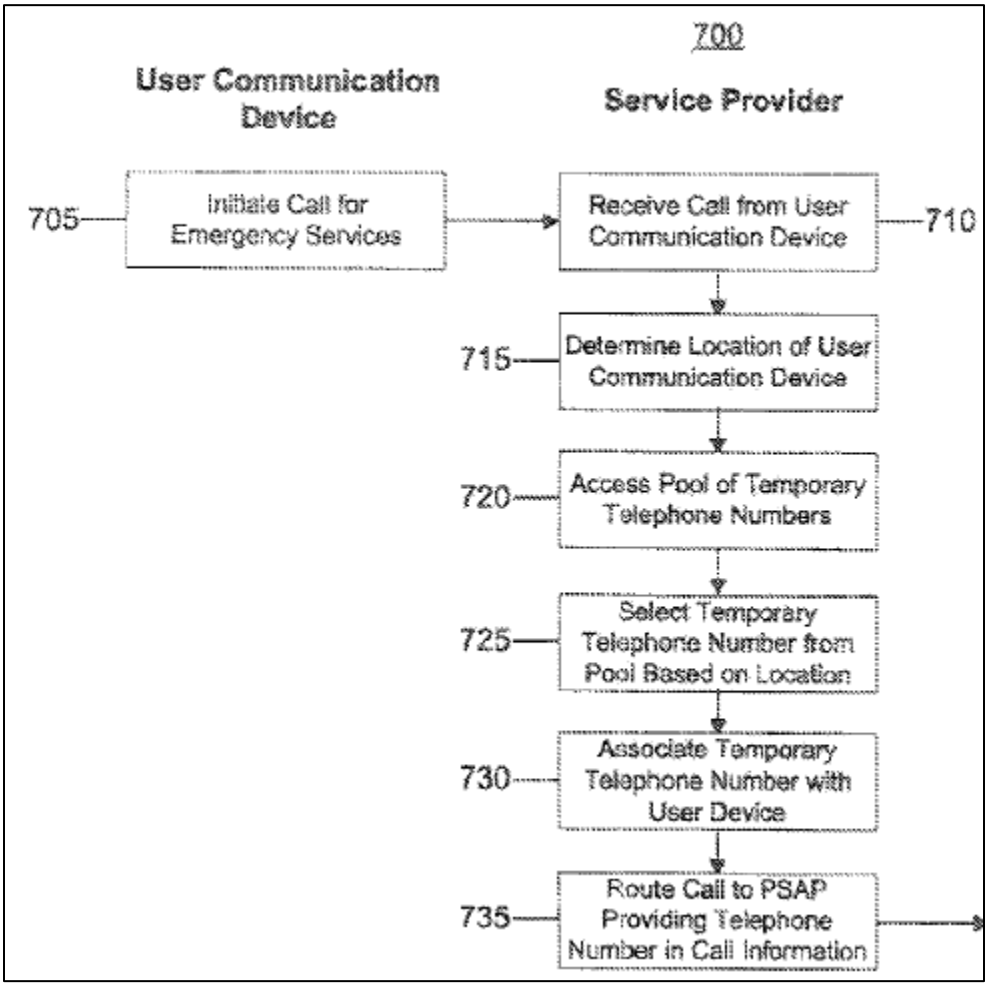

C. Ejzak

63. Ejzak teaches techniques for use in a communication system having many of the same network entities, and associated functionalities, taught in Buckley. *Compare* EX1005, Figure 3A *with* EX1007 Figure 1 (element 141) and Figure 3 (both including, e.g., IP Multimedia Subsystem (IMS), Mobile Switching Center (MSC), Mobile Gateway Control Functions (MGCF), Interrogating Call State Control Function (I-CSCF), and Serving Call State Control Functions (S-CSCF)). Like Buckley and Bates, Ejzak teaches PSTN and VoIP call interoperability such that calls can traverse packet-switched networks (like an IP network) and circuit-switched networks (like a PSTN). *See* EX1007, 2:36-40. Ejzak further teaches functionality to use access codes, such as E.164 numbers, to identify IP addresses that are used to route calls over IP networks. *Id.*, 8:43-48. It also teaches services to establish emergency service calls, and services that use a mobile phone's location to route call traffic over the least cost path. *Id.*, 7:28-36, 4:46-60.

64. Like Buckley, Ejzak further teaches using SIP messaging within this architecture. *Id.*, 8:58-66 For example, during Ejzak's call messaging and routing process, a callee identifier (such as an E.164 telephone number) is received in a SIP Invite message, and Ejzak's network entities are able to select from, and analyze, sets of attributes associated with that callee

identifier. *Id*. Ejzak's servers determine from those attributes whether the callee identifier is associated with a device that can receive calls routed over packet-switched networks (*e.g.*, IMS or IP) or circuit-switched networks (*e.g.*, PSTN). *Id*.

65. Specifically, Ejzak teaches querying a Domain Name System (DNS) using the callee identifier (E.164 number). *Id*. Ejzak's DNS "provides a standardized database and a standardized protocol to store and retrieve information about domain names from the database." *Id*., 8:29-36. As such, "[q]ueries are sent to DNS [], which responds with the associated resource records [e.g., IP addresses] for the requested input." *Id*. Thus, the DNS replies with the appropriate IP address, from a set of available IP addresses, to enable communications over an IP network or to route the call to a PSTN gateway for communication over a PSTN. *See id*. 8:63-9:6. Notably, even if the callee identifier is associated with a PSTN, the DNS can respond with attributes for SIP service for that callee, which would include an IP address that enables establishing communications through an IP network. *See id*. 9:8-12.

66. Ejzak's DNS further includes "the functionality of an ENUM Server," which maps PSTN numbers to IP addresses, and vice-versa, thus rendering them interchangeable for the purpose of identifying IP network communication channels for communication between a caller and callee, including using SIP

messaging (as in Buckley). EX1007, 8:29-36, 8:43-48 ("If a telephone number in DNS 165 contains SIP service attributes, the result of an ENUM translation from DNS 165 is a domain name of the SIP server for the user with that telephone number. A subsequent query to DNS 165 with that domain name determines the IP address of the SIP server."). The DNS server thus maps telephone numbers to a set of attributes, any of which can be selected and "used to contact a resource associated with that telephone." 8:36-43. And, the DNS/ENUM functionality allows network entities to map any E.164 number to an IP address that may be used to route a call to that E.164 number over an IP network.

67. Ejzak also teaches using a network entity called a "BGCF" for "call/session control." EX1007, 4:25-29. The BGCF selects the optimal gateway to route a call by determining "which network should be used to provide inter-working with PSTN," a determination that the BGCF can make by analyzing "the current location of the calling UE, [and] the location of the PSTN address," with "the desire to minimize path distance within the PSTN network, and a desire for the least-cost path." *Id*., 4:46-60.

VIII. SPECIFIC GROUNDS OF OBVIOUSNESS

A. Ground I: Claims 51-52, 57, 60, 63, 65, 67, 73, 77, 103-104, 108-110, 124, 130, 133, and 138-139 Are Obvious Over Buckley.[7]

1. Claim 51

a. Element 51[preamble][8]: "A method for enabling a wireless device to establish communications with a destination node, the method comprising:"

68. In my opinion, Buckley teaches this element.

---

[7] A POSITA would have understood that all of the disclosures relied upon in my analysis are part of a single embodiment as disclosed by Buckley, albeit a particular mode or implementation of that embodiment. For example, although Buckley states that "[i]n some embodiments, the IMRN may be mapped to all the received SIP call information" (EX1005, 6:1-3), a POSITA would have understood that the same structure and processes are used even where the IMRN is mapped to fewer than "all" the received SIP call information; thus, whether the IMRN is mapped to "all" or less than "all" the received call information represents merely specific implementations of the same overarching embodiment (notwithstanding Buckley's imprecise use of the term "embodiment"). In each case, my analysis relies on the embodiment of the SIP interaction between the UE and AS node taught by Buckley, as depicted at a high level in Figure 3A (for example). However, to the extent the disclosures I rely on from Buckley are not

considered to all be part of the same embodiment, a POSITA would have recognized that the disclosures are minor variations of each other, and that the disclosures are thus all compatible with each other. EX1005, 23:33-38 ("[T]he operation and construction of the embodiments of the present patent application will be apparent from the Detailed Description set forth above. While the exemplary embodiments shown and described may have been characterized as being preferred, it should be readily understood that various changes and modifications could be made therein without departing from the scope of the present disclosure…."). A POSITA would have been motivated to construct the particular embodiment of Buckley analyzed herein in order to efficiently route calls and avoid unnecessary long-distance and roaming charges, as was well-known in the art. See, e.g., EX1014 at Abstract (teaching "a method of providing a local access number"), [0036] ("[T]he subscriber may use the local access number to connect to a chosen long distance service provider."); EX1001 at 1:20-28 ("One known technique for avoiding the long distance charges of mobile telephone service providers is to use a 'calling card'. A 'calling card' may permit the user of the mobile telephone to place a call to a local telephone number…. The user may thus avoid the long distance charges of the mobile telephone service provider, which may be higher than the charges for using the 'calling

69. Buckley teaches methods for UEs (User Equipment), in particular "mobile communication device[s] (e.g. cellular phones …)." EX1005, 3:25-40. Buckley teaches methods wherein these UEs (wireless devices) communicate with a callee's communication device (destination node), such as a phone, via a communication network. EX1005, *e.g.*, cl. 1 ("A method for use in processing calls in a network environment"), 2:8-9 ("originating a SIP call … with … the called party").

b. **Element 51[a]**

70. In my opinion, Buckley teaches this element.

i. "receiving from the wireless device an access code request message,…"

---

card'."). A POSITA also would have had a reasonable expectation of success in constructing the particular embodiment of Buckley analyzed herein because all of the disclosures are applied within the context of the SIP interaction between the UE and AS node as taught in Buckley's single reference, and Buckley recognizes that any such "changes and modifications" would be "readily understood" by a POSITA. EX1005, 23:33-38.

[8] The complete text of the claims' corresponding portions is available in the claim listing attached hereto as Appendix A.

71. As shown, for example, in Figure 3A (cropped in relevant part below),[9] Buckley teaches that after a UE (mobile phone) 302 initiates a call, it transmits an SIP Invite (access code request) message 312 to a specific network node 308 called an Application Server (AS) (access server) that receives the SIP Invite message 312 (access code request message). EX1005 6:58-63 ("A Wireless UE device 302 … is operable to generate a SIP Invite message 312 towards an application server (AS) node 308 in response to detecting that a SIP call is being initiated from UE device 302").

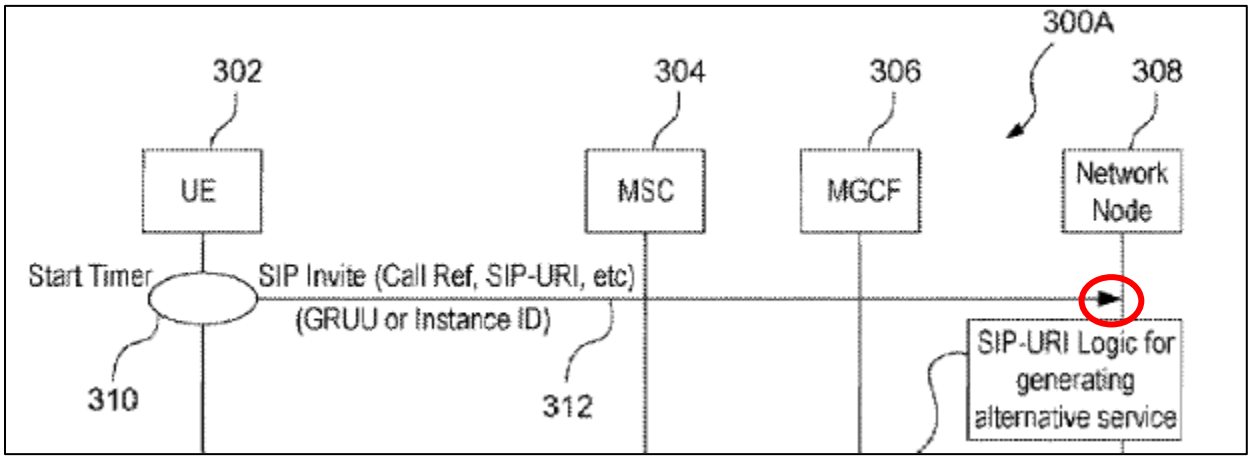

72. The SIP Invite message (access code request message) invites (*i.e.*, requests) the AS to provide an IP multimedia routing number (IMRN) (access code).

[9] References herein to Buckley Figure 3A also include the analogous portions of Figure 3B "wherein certain intermediary nodes in a home network 350 are exemplified." EX1005 8:22-26.

The IMRN identifies, for example, a telephone number known as an E.164 number. EX1005, 4:47 ("E.164 numbers [] are operable as IMRNs"), 4:63-67 ("E. 164 is indicative of the International Telecommunications Union (ITU) telephone numbering plan…."). The IMRN telephone numbers are access codes because they provide access to call the callee. EX1001, 2:44 ("The access code may include a telephone number."). For example, the IMRN is required for the UE to have access to a communication channel set up as a CS-network call. EX1005, 9:61-63 ("[T]he UE shall use the IMRN … as the E.164 number to set up a CS call"). Relatedly, the IMRN telephone number is a code of digits used by the wireless device in place of the original callee identifier (*i.e.* the URI provided by the caller) to connect to the AS node so that the AS node can complete the call to the callee's original URI, which is the AS node's purpose in providing the IMRN. EX1005, 6:38-40 ("[T]he UE sets up a call using the IMRN that terminates on the AS node. The IMRN is then interrogated against the record to retrieve the called party's URI"). Thus, the SIP Invite message that requests such an IMRN be provided is an access code request message.

ii. <u>"…including a destination node identifier associated with the destination node and a location identifier identifying a geographical location of the wireless device;"</u>

73. Buckley's SIP Invite message (access code request message) also includes a destination node identifier associated with the destination node. Buckley teaches that the communication device of a "called party" (destination node) can be "identified with a Uniform Resource Indicator (URI)" (destination node identifier, which is associated with the destination node). EX1005, 1:51-53. The SIP Invite (access code request message) includes the called party's URI (destination node identifier). EX1005, 6:63-65 ("[T]he SIP Invite message 312 includes applicable call information such as [the] called party's SIP URI….").

74. The SIP Invite (access code request message) also includes the UE's (wireless device's) geographic location information in the form of a P-Preferred-ID. EX1005, 8:67-9:20. "The P-Preferred-ID is set to the calling line identity (CLI) associated with the user or subscriber of the UE device for identification in the CS network"—in other words, a telephone number. *Id*., 9:3-6, 9:20 (example "P-Preferred-Identity: <tel: +1-555-1001>"). A POSITA would have recognized that the telephone number includes a geographic location identifier because each of the country, area code, and telephone prefix (*i.e.*, the three digits in a telephone number before the final four digits), are associated with the phone's geographic location. *See* EX1001, 12:39-42 "([T]he location identifier may include a … local calling area where the

mobile telephone is or may be situated."). The P-Preferred-ID is thus a geographic location identifier that identifies the geographical location of the caller's wireless device. *See id*.

75. As a further example, The SIP invite (access code request message) also includes the UE's (wireless device's) geographic location information by including the "calling party's SIP URI." *Id*. 5:25-27, 47-53. Buckley teaches that a "typical" form of "the URI (or SIP address)" is in "the form of sip:<username>@<hostname>" (EX1005, 5:25-27, 7:1-2), and provides an example showing that the hostname can be an IP address (EX1005, 9:27: "Contact: sip:alice@***192.0.2.1***"). Indeed, RFC 3261 (EX1010 at 149), which is cited in Buckley (EX1005, 5:29-33), teaches that the host name can contain an IP address. Thus, Buckley teaches that a "typical" calling party's SIP URI can be in the form of a network address that includes an IP address. A POSITA would have recognized the SIP URI is a geographic location identifier because it includes an IP address and IP addresses can be translated into geographic locations. EX1009, 9:6-9 (Teaching a "communications service provider may determine a current location of the user communication device based on an IP address the user communication device is using to connect to the data network."). In addition, dependent claim 60 depends on claim 51 and clarifies that the location identifier comprises an IP address. EX1001, cl. 6.

c. **Element 51[b]**

76. In my opinion, Buckley teaches this element.

i. "<u>in response to receiving the access code request message, causing a routing controller to produce an access code…</u>"

77. As the '721 Patent describes, "the access server 14 and the routing controller 30 need not be separate, but may, for example, be combined in a single component" and "the routing controller 30 executes a process to facilitate communication between callers and callees." EX1001, 15:14-20. Buckley teaches a network node (308 in Figs 3A and 3B) where an AS (access server) is "provided with appropriate logic/structure/software/firmware module(s)." EX1005, 4:42-45. A POSITA would have understood that these modules comprise a routing controller operably configured to route a call between the caller and callee because these modules execute the process to facilitate communication between callers and callees where, for example, an E.164 number is used as an IMRN (access code). EX1005, 4:31-40 ("IP multimedia ***routing*** numbers (IMRNs) from which a select IMRN may be dynamically-allocated or otherwise selected for purposes of SIP call ***routing***"). For example, the AS contains modules that: "maintain a pool of E.164 numbers that are operable as IMRNs which terminate on the AS node," select an E.164 number and map it a "called party's" URI (callee identifier), "provid[e] the

selected E.164 number to the originating UE device," and "verify[] that the selected E.164 number has not timed out when that selected E.164 number is returned" during CS call set up. *Id*., 4:46-58. These modules are AS components that establish a call to the callee by, *inter alia*, verifying the IMRN has not timed out and establishing a SIP session for carrying out the call based on the IMRN correlation. EX1005, 4:57-60 (The modules "verify [] that the selected E.164 number has not timed out when that selected E. 164 number is returned (via conventional CS call setup) to AS 114-N for effectuating a SIP call session with respect to the called party."); *id*. 8:2-4, ("If the IMRN has not timed out, the AS node [] may establish the SIP session based on the IMRN correlation."); *id*., 8:45-47 ("Regardless, once the IMRN is received at the AS node 308, appropriate call correlation is made to establish the SIP call between the UE and the called party.); *id*., 4:31-40 ("IP multimedia ***routing*** numbers (IMRNs) from which a select IMRN may be dynamically-allocated or otherwise selected for purposes of SIP call ***routing***"). Buckley also teaches that the "IMRN mapping" is used "for establishing the SIP session or call to the called party" and that it was "understood by those skilled in the art" to use further intermediate messaging and "resource allocation/reservation negotiations" such that a "bearer path is established between the UE device [] and the called party," which meets, or

at least renders obvious, the routing controller and channel functionality in this claim element. *Id.*, 7:53-64.

78. These modules that comprise the routing controller produce the access code by selecting it from the pool of IMRNs. EX1005, *e.g.*, 4:31-37 ("Appropriate database structures (e.g. DB 122), timer mechanisms (e.g. timer 124) and suitable logic 126 may be provided in association with AS [] for purposes of configuring and managing a pool of IP multimedia routing numbers (IMRNs) from which a select IMRN may be dynamically-allocated or otherwise selected for purposes of SIP call routing….").

ii. "…[the access code] identifying a communications channel on a gateway through which communications between the wireless device and the destination node can be conducted,…"

79. A POSITA would have understood that an E.164 telephone number (used in Buckley as an IMRN (access code) identifies a communications channel on a gateway. For example, the '721 Patent confirms that it was known that a telephone number identifies a communication channel. *See, e.g.*, EX1001 3:36-38 ("[t]he access code may include a telephone number identifying a channel operably configured to cooperate with an IP network.").

80. Further, Buckley's SIP messaging process described above creates a "SIP session" based on the IMRN (E.164 number), and a SIP session is a channel because it establishes the end-to-end communication pathway for the duration

of the communication "session." EX1005, 7:50-56 ("The IMRN is then interrogated against the record to retrieve the called party's URI for ***establishing a SIP session with the called party*** (i.e. between the calling party (UE device) identified by the A-party address and the called party identified by the B-party address"[10]); EX1010 (RFC 3261),[11] 1 ("This document describes Session Initiation Protocol (SIP), an application-layer control (signaling) protocol for creating, modifying, and terminating sessions with one or more participants. These sessions include Internet telephone calls, multimedia distribution, and multimedia conferences. … ***SIP makes use of elements called proxy servers to help route requests to the user's current location***, authenticate and authorize users for services, ***implement provider call-routing policies***, and provide features to users. SIP also provides a registration function that allows users to upload their current locations for use by proxy servers."). As part of establishing a SIP connection, the Real-Time Transport Protocol (RTP) carries the media stream (e.g., voice and video)

[10] Buckley occasionally refers to the two parties to a call as the "A-party" and "B-party." *See, e.g.*, EX1005, 6:41-43.

[11] RFC 3261 is expressly cited in Buckley. EX1005, 5:29-33.

along the SIP Channel. EX1005, 7:19-21 ("A cause value in the SIP Invite message will be set appropriately to indicate that a radio bearer channel for the session is to be established over the CS domain.").The IMRN is used by the wireless device in place of the destination node URI (destination node identifier) to connect to the AS (gateway) such that the AS node can complete the call to the original destination node URI; indeed, that is the AS node's purpose in providing the IMRN. *See* EX1005, 6:38-40 ("the UE sets up a call using the IMRN that terminates on the AS node. The IMRN is then interrogated against the record to retrieve the called party's URI").

81. The AS is a gateway because it converts the CS network call setup initiated by the UE (wireless device) to a SIP call setup on a PS network, which requires adjusting traffic between two different networks that use two different protocols (*e.g.* Internet Protocol (IP) used by the PS network, and PSTN protocol used by the CS network). EX1005, 6:14-23 ("[A]ppropriate call setup is then initiated by the UE device using the selected IMRN, whereby the accepted IMRN is returned to the AS node since it terminates thereat. Upon receipt of the IMRN at the AS node … the called party's SIP URI or Tel URI … is utilized by the AS node for effectuating the SIP session with the called party by producing and sending a SIP Invite message"). Indeed, teaching the transition of calls initiated on a CS network to a PS network

(which use two different protocols) is core to Buckley's invention. *See id*., 1:24-28 ("Disclosing "managing call routing in a network environment including a circuit-switched (CS) network and an IP multimedia subsystem (IMS) network, wherein a CS-originated IP call (e.g. based on the Session Initiation Protocol or SIP) is to be routed using the IMS network infrastructure."); 1:51-57 ("[I]f the called party happens to be an IP-only subscriber and is identified with a Uniform Resource Indicator (URI), the originating UE device may not be able to make the IP-based call since the UE device can effectuate only E.164 number-based calls while operating in the circuit-switched cellular network domain.").

iii. "… <u>the access code being based on the location identifier of the access code request message received from the wireless device,…</u>"

82. Buckley also teaches that the IMRN is based on the location identifier that was sent in the SIP Invite message (access code request message), which, as discussed above, is the P-Preferred ID and/or caller's URI. Specifically, Buckley teaches the IMRN can be constructed based on "some relationship(s) to one or more of the parameters received in a message … from the UE device" or "may be mapped to ***all the received SIP call information***" in the SIP Invite message. EX1005, 3:4-12, 4:41-49, 6:1-3. And, "all the received SIP call information" would include the P-Preferred-ID, and additionally, the

caller's SIP URI. *Id*., 6:63-66 ("[T]he SIP Invite message 312 includes applicable call information such as … the P-Preferred-Identity"); 5:47-53 ("The call information may include information such as … [the] calling party's SIP URI…."). Thus, this mapping to "***all*** the received SIP call information" bases the IMRN on the location identifier(s) (P-Preferred ID and/or caller's URI) in the SIP Invite message (access code request message). And a person of ordinary skill in the art would have found it obvious from Buckley's disclosure, and the known motivation to complete calls using local numbers to reduce or eliminate long distance or roaming charges, to select an IMRN based on a "relationship" to the location "parameters" received from the UE device.

iv. "… wherein the access code is useable by the wireless device to initiate communications with the destination node through the communications channel; and"

83. The SIP Response includes an IMRN (access code) that the UE uses to initiate a call to the callee using the channel identified by the IMRN. EX1005, 7:36-42 ("[T]he network node (in this example, the IMS AS node) dynamically allocates or otherwise identifies a selected IMRN mapped to the call information or parameters … and returns it back to UE device 302 via SIP 380 [Response] message 316."); EX1005, 6:37-43 ("Upon correlating the IMRN with the call reference number, the ***UE sets up a call using the IMRN***

that terminates on the AS node. The IMRN is then interrogated against the record to ***retrieve the called party's URI*** for establishing a SIP session with the called party") For example, Buckley teaches "dynamically allocating or otherwise selecting the E.164 number [IMRN] to a received called party's URI (e.g. SIP URI or Tel URI) and other received information; and providing the selected E.164 number to the originating UE device via a SIP 380 (Alternative Service) Response message" to provide access to reach the destination node. EX1005, 4:52-57.

d. **Element 51[c]**

84. In my opinion, Buckley teaches this element.

i. "<u>transmitting, to the wireless device, an access code reply message including the access code based on the location identifier, …</u>"

85. As shown, for example, in Figure 3A below (cropped in relevant part), Buckley teaches that AS network node 308 (access server) transmits a SIP Response 316 (access code reply) message back to the UE 302 (wireless device):

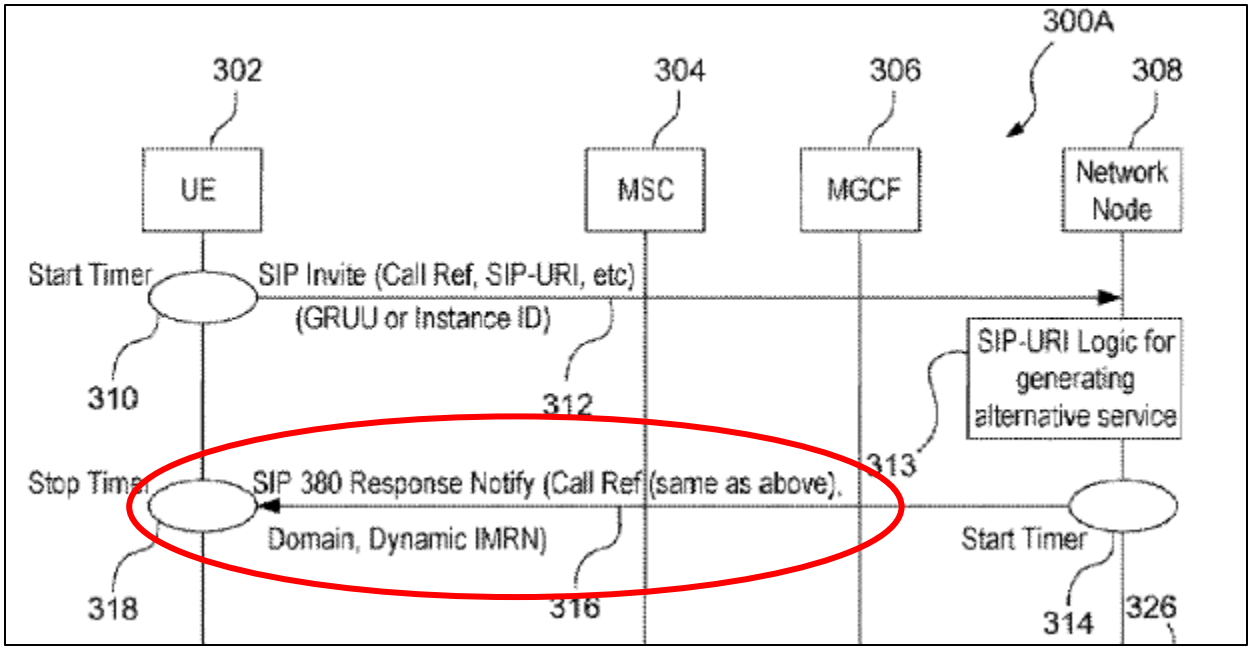

As shown within the circled portion of the figure above, the SIP Response message (access code reply message) includes an IMRN (access code). EX1005, 7:36-42 ("[T]he network node (in this example, the IMS AS node) dynamically allocates or otherwise identifies a selected IMRN mapped to the call information or parameters … and returns it back to UE device 302 via SIP 380 [Response] message 316.")

ii. <u>"…to cause the wireless device to use the access code to initiate communications with the destination node through the communications channel.</u>

86. Buckley teaches the UE (wireless device) initiating a call using the IMRN (access code) to identify the destination node, e.g., using "a call setup message 320 that includes the selected IMRN" resulting in messages "towards the AS node, which then uses the IMRN mapping for establishing the SIP session or

call to the called party." EX1005, 7:50-56, Figure 3A. The call is initiated through the AS, which associates the IMRN to the called party's URI (destination node identifier per Element 51[a]). EX1005, 6:37-43 ("Upon correlating the IMRN with the call reference number, the ***UE sets up a call using the IMRN*** that terminates on the AS node. The IMRN is then interrogated against the record to ***retrieve the called party's URI*** for establishing a SIP session with the called party"); EX1005, 8:37-39 ("A call setup message 368 having the IMRN is provided to MSC 304, which initiates a CS origination procedure 370.").

2. Claim 52: "The method of claim 51, wherein receiving comprises receiving the access code request message on a non-voice network."

87. In my opinion, Buckley teaches this claim.

88. For example, Figure 1 depicts a UE (wireless device) connected to an AS (114-N) (access server) via a non-voice, packet switched (PS) network including a WLAN Broadband Access network (108) and the IMS Core Network (112) as annotated in red. EX1005, 3:23-24 ("[A]ccess space 104 [is] comprised of a number of access technologies available to a plurality of UE devices"), 3:41-43 ("The access space 104 may be comprised of both CS and ***PS networks***, which may involve wireless technologies, wireline technologies, broadband access technologies, etc.").

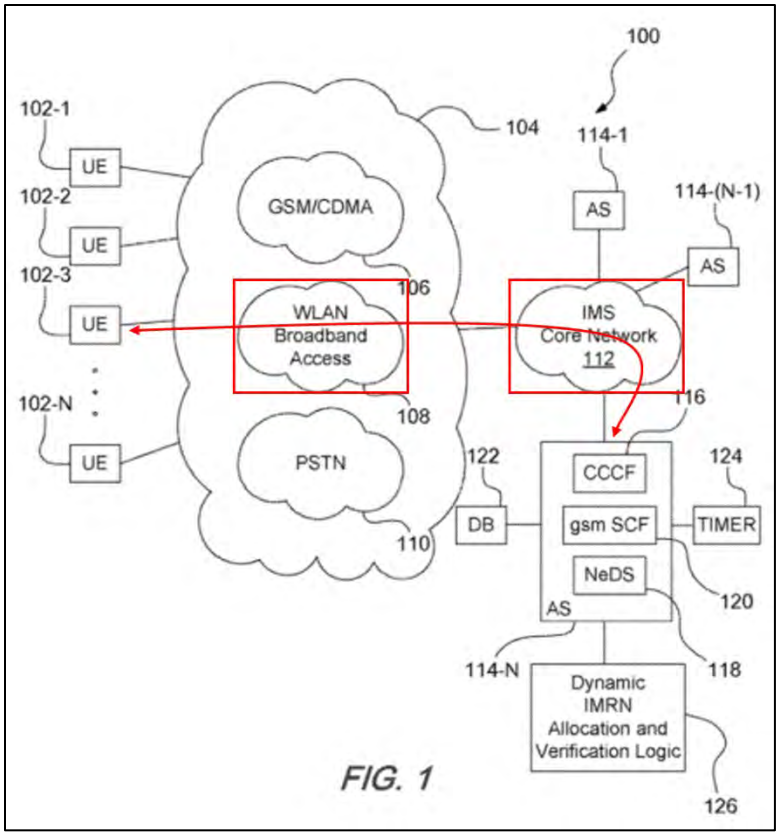

FIG. 1

89. The UE transmits its SIP Invite (access code request message) "to an application server (AS) node in the IMS network" through this WLAN Broadband Access network, and thus the AS receives the SIP Invite message (access code request message). *Id*. 14:33-36. PS networks, including the IMS and WLAN Broadband Access networks, are non-voice networks in the '721 Patent's parlance because they carry IP data packets, not voice signals. EX1001 at 11:58-59 ("non-voice network, such as an Internet, using WiFi or GPRS technology for example") A POSITA would also have found it obvious for the SIP Invite to be received through a non-voice network because the SIP Invite is not a voice signal, so there is no specific need for a voice network to

transmit the message, and a non-voice network would more efficiently handle such data communication. The SIP protocol is part of the TCP/IP protocol suite that is the foundation of the Internet and packet switching networks, which are non-voice networks, and thus it would be expected that the SIP Invite would be transmitted through a non-voice network because SIP was specifically designed for non-voice networks. For example, Buckley teaches that it was well-known that for IP networks, "IP is used to transport both bearer traffic [voice traffic] and SIP-based signaling traffic." EX1005, 3:58-62.

3. Claim 57: "The method of claim 51, wherein causing the routing controller to produce the access code comprises causing the access code to be selected from a pool of access codes."

90. In my opinion, Buckley teaches this claim.

91. Buckley's home AS node selects the IMRN (access code) from a pool of IMRNs (access codes). EX1005, 8:54-61 ("[W]hen the UE device detects that it needs to invoke CS call origination, it may produce and send a SIP Invite message. [T]he SIP Invite message is set to indicate that the call needs to be set up over CS."); *id*., 4:34-37 (AS node capable of "configuring and managing ***a pool of IP multimedia routing numbers (IMRNs)*** from which a select IMRN may be dynamically-allocated or otherwise selected for purposes of SIP call routing….").

92. Each IMRN in Buckley's pool of IMRNs identifies a respective telephone or Internet Protocol (IP) network address, specifically an E.164 telephone number. *See* EX1005, 4:46-47 ("maintaining a pool of E.164 numbers that are operable as IMRNs"). Additionally, a POSITA would at least find it obvious that each access code in Buckley's pool of access codes identifies a respective telephone number of IP network address because Buckley's system is operational even if the pool only comprised one of those two options (namely E.164 numbers, as discussed above), let alone both, so is there no need to include anything other than such types of access codes in order to enjoy the benefits of Buckley's teachings. Alternatively, another "pool" in this analysis is the subset of Buckley's IMRNs that each identify a respective telephone number or IP network address. EX1005, 5:5-7 ("[I]t may be desirable to provide for different pools of IMRNs").

4. Claim 60: "The method of claim 51, wherein the location identifier comprises an Internet Protocol (IP) address of the wireless device in a wireless IP network."

93. In my opinion, Buckley teaches this claim.

94. As discussed in Element 51[a], Buckley's SIP Invite message (access code requests message) includes the "calling party's SIP URI" (location identifier) which "may take on the form of sip: <username>@<***hostname***>." EX1005, 5:47-53, 5:25-27. A POSITA would have recognized that the hostname can

"contain [a] numeric IPv4 or IPv6 address." EX1010 (RFC 3261)[12], 148. Buckley teaches an exemplary SIP URI of "sip:alice@***192.0.2.1***," which includes an IP address as the hostname, namely "192.0.2.1". EX1005, 9:27. Thus, Buckley teaches transmitting the wireless device's IP address (as the hostname) when transmitting the location identifier in the SIP invite message.

95. As discussed in Claim 52, Buckley teaches that the SIP Invite message (access code request message) is sent through a WLAN Broadband Access network, which includes "wireless local area networks" and a POSITA would have understood this to include a wireless IP network to enable wireless capabilities at "broadband" speeds. EX1005, 3:51.

5. Claim 63: "The method of claim 57, wherein at least one of the access codes in the pool of access codes identifies an IP network address as a possible communications channel through which the communications can be conducted."

96. In my opinion, Buckley teaches this element. *See* Element 51[b].

97. Buckley teaches that the IMRN (access code) identifies an IP address of the called party such that the AS (access server) can set up a SIP session (channel) for the call. The IMRN (access code) is mapped to the called party's URI (destination node identifier), which allows the AS (access server) to translate

[12] RFC 3261 is cited in relevant part in Buckley. EX1005, 5:29-33.

the IMRN to called party's URI when the UE sets up the call. EX1005, 6:38-40 ("[T]he UE sets up a call using the IMRN that terminates on the AS node. The IMRN is then interrogated against the record to retrieve the called party's URI"). The called party's URI can be a SIP URI, which Buckley teaches "typically" includes an IP network address. *See id*., 6:63-65 ("[T]he SIP Invite message 312 includes applicable call information such as [the] called party's SIP URI…."); *id*., 5:25-27 ("As is well known, a typical SIP address may take on the form of sip:<username>@<hostname>...."); *id*., 9:27 (Buckley teaching an exemplary SIP URI of "sip:alice@***192.0.2.1***," which includes an IP address in the hostname field). In these situations, the AS establishes a SIP session (channel, as discussed in Element 51[b]) using the IMRN to identify the called party's SIP URI. EX1005, 7:50-56, Figure 3A ("The IMRN is then interrogated against the record to retrieve the called party's URI for ***establishing a SIP session with the called party*** (i.e. between the calling party (UE device) … and the called party….").

98. Also, it would have been obvious to alternatively use an IP address of the AS node as the access code (IMRN) (in addition to, or instead of, an E.164 telephone number) because an IMRN is an "***IP*** multimedia routing number" and hence is ordinarily expected to carry an IP address. EX1005, 4:31-38. Buckley teaches that E.164 numbers are just one example of what an IMRN

may comprise. EX1005, 15:56 ("a pool of IMRNs, (***e.g.***, the E.164 numbers)"). Moreover, Buckley's system has as its core an "***IP*** multimedia subsystem (IMS) core network" that "is coupled to the various access networks … including any CS-based networks." EX1005, 3:56-58. As was "well known, the IMS standard defined by the 3GPP is designed to allow service providers [to] manage a variety of services that can be delivered via IP over any network type, wherein IP is used to transport both bearer [voice] traffic and SIP-based signaling traffic." *Id*., 3:58-62.

99. Further, Buckley's UE (wireless device) was preferably able to operate over both PSTN (CS) and IP (PS) networks to "transition from one mode of communications to another mode of communications without loss of continuity." *Id*., 3:35-40. "Furthermore, in order to effectuate call control of a SIP call using CS as the voice bearer," Buckley's IMS application server element in the home IMS network includes functionality that "tracks all call sessions and related mobile Voice-over-IP (VoIP) bearer traffic, between CS and IMS domains." EX1005, 4:18-25. It would have been obvious that Buckley's AS should provide an IMRN (access code) that included, or at least identified, an appropriate IP address to take advantage of Buckley's UE's ability to transition from a PSTN (circuit-switched) to an IP (packet-switched) communication mode to reach the callee over Buckley's IMS network.

6. Claim 65: "The method of claim 57, wherein at least one of the access codes identifies a telephone number as a possible communications channel through which the communications can be conducted."

100. In my opinion, Buckley teaches this claim. *See* Claim 57.

101. Each IMRN in Buckley's pool of IMRNs identifies a respective telephone or Internet Protocol (IP) network address, specifically a E.164 telephone number. *See* EX1005, 4:46-47 ("maintaining a pool of E.164 numbers that are operable as IMRNs").

7. Claim 67: "The method of claim 51, wherein the access code request message includes a caller identifier and wherein the method further comprises associating the caller identifier included in the access code request message with the access code produced by the routing controller."

102. In my opinion, Buckley teaches this claim.

103. Buckley teaches that the SIP Invite message (access code request message) includes the caller identifier, namely the caller's SIP URI. EX1005, 5:47-52 ("[T]he call information may include information such as … [the] calling party's SIP URI…."). Buckley further teaches the IMRN "may be ***mapped to all the received SIP call information***," which includes the caller's SIP URI, and thus the caller's SIP URI (caller identifier) included within the SIP Invite message (access code request message) is associated with the IMRN (access code) via a mapping. *Id*., 3:10-12.

8. Claim 73: "The method of claim 51, wherein transmitting comprises transmitting the access code reply message on a non-voice network."

104. In my opinion, Buckley teaches this claim.

105. Buckley teaches a UE and AS (access server) connect via a non-voice, packet-switched network. *See* Claim 52.

106. Buckley teaches the IMRN is transmitted from the network node via a packet-based SIP 380 Response (access code reply message) over a non-voice PS network. *See id.*, 30:23-34 (The mobile communication device "receive[s] a SIP 380 (Alternative Service) Response message from the IMS [***IP*** Multimedia Subsystem] network"). A POSITA would also have found it obvious that the access code reply message could be transmitted through another type of non-voice network because the access code reply message is not a voice signal, so there is no specific need for a voice network to transmit the message, as a non-voice network could efficiently handle such data communication.

9. Claim 77

a. **Element 77[preamble]: "An apparatus for enabling a wireless device to establish communications with a destination node, the apparatus comprising:"**

107. In my opinion, Buckley teaches this element. *See* Element 51[preamble].

b. **Element 77[a]: "means for receiving from the wireless device an access code request message including a destination node identifier associated with the**

destination node and a location identifier identifying a geographical location of the wireless device;"

108. In my opinion, Buckley teaches this element.

109. Buckley teaches means for receiving, which the parties agree incorporates the structure of "a network interface." Buckley teaches the application server or AS node has a network interface that allows communication with the UE via the IMS core network, as depicted, for example, in Figure 1. And, Figure 1 depicts network "infrastructure," which a POSITA would have understood to include the hardware and software interfaces necessary to send and receive network messages as described throughout Buckley's disclosure. EX1005, 1:65-67.; *see also id*. 3:56-58 (describing that the networks are "coupled'); Id. 4:41-43 (describing that the AS node as "appropriate logic/structure/software/firmware module(s)… ."); *id*. 6:44-50 (confirming that POSITA would recognize that the message flow "may be mediated through a number of other appropriate network infrastructure elements" as appropriate to the device capabilities, network features, and network protocols being used). A POSITA would have understood that the AS node depicted in Figure 1 contains a network interface in order to connect to the "IMS Core Network" and ultimately to the UE, as annotated in red. Without such a network interface, it is unclear what the lines in the diagram would be intended to convey or how Buckley would be operable.

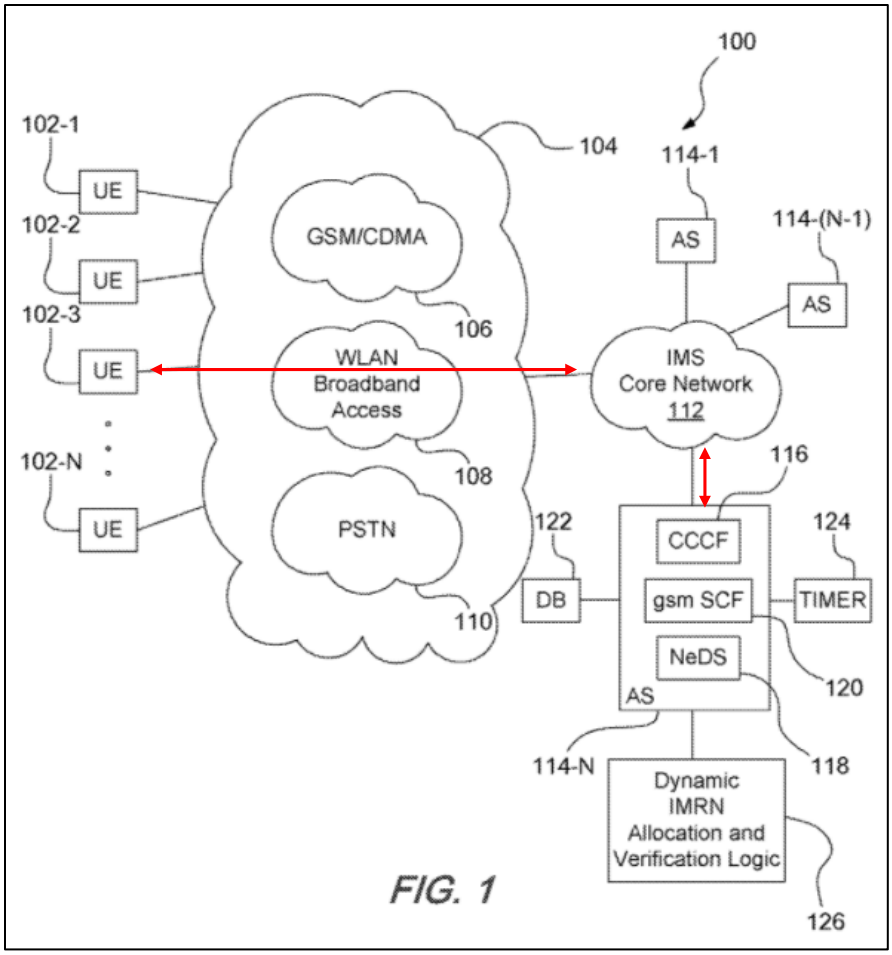

FIG. 1

110. In my opinion, Buckley teaches the element's remainder. *See* Element 51[a].

c. **Element 77[b]: "means for causing a routing controller to produce an access code identifying a communications channel on a gateway through which communications between the wireless device and the destination node can be conducted, in response to receiving the access code request message, such that the access code is produced based on the location identifier of the access code request message received from the wireless device and such that the access code is useable by the wireless device to initiate communications with the destination node through the communications channel; and"**

111. In my opinion, Buckley teaches this element

112. Buckley teaches an access server in the form of its AS node. *See* Element 30[b]. Moreover, the application server has "one or more ***processors***" (EX1005, cl. 34) and is "provided with ***appropriate logic/structure/software/firmware module(s)***" (*id.*, 4:2-3) that act as a routing controller (*see* Element 51[b]). The AS node and associated routing controller produce an IMRN (access code) that identifies a communication channel based on the location identifier (caller's SIP URI and/or P-Preferred ID), where the IMRN (access code) is different from the destination node identifier and useable by the wireless device to initiate a communication with the destination node using the channel. *See* Element 51[b]. This is performed by the AS node with its associated "appropriate logic/structure/software/firmware module(s)" (routing controller) that has a processor that perform the algorithm of Figure 7 of the '721 Patent. *See* Elements 51[a]-[c]. The AS has an I/O port or network interface. *See* Element 77[a].

d. **Element 77[c]: "means for transmitting an access code reply message including the access code to the wireless device, wherein the access code in the access code reply message is based on the location identifier and is used by the wireless device to initiate communications with the destination node through the communications channel on the gateway."**

113. In my opinion, Buckley teaches this element. *See* Element 51[c]; 77[a].

10. Claim 103

a. Element 103[preamble]: "An apparatus for enabling a wireless device to establish communications with a destination node, the apparatus comprising:"

114. In my opinion, Buckley teaches this element. *See* Element 51[preamble].

b. Element 103[a]: "a processor circuit including at least one processor;"

115. In my opinion, Buckley teaches this element. *See* Element 77[b].

c. Element 103[b]: "a network interface in communication with the processor circuit; and"

116. In my opinion, Buckley teaches this element. *See* Element 77[a]-[c]. Moreover, Buckley teaches the processors are "adapted to process the CS call by being further adapted to: receive a SIP Invite message," which requires a network interface in order to receive. EX1005, 28:43-46. A POSITA would have understood that that network interface would be in communication with a processor to make network communications, because the network interface by itself is not sufficient to "process the CS call"—a processor is needed to process calls. EX1005, 18:33-38 ("When the network node receives the SIP Invite message from the UE device, it correlates it with the additional SIP Invite message from the network based on the stored mapping, the identification of the UE device, and the assigned E.164, for further ***processing*** of the SIP call.").

d. **Element 103[c]: "a non-transitory computer readable medium having stored thereon computer executable codes for directing the at least one processor to:"**

117. In my opinion, Buckley teaches this element. *See* 77[b].

118. Buckley's AS is an access server that AS has "one or more ***processors***," EX1005, cl. 34, and is "provided with ***appropriate logic/structure/software/firmware module(s)***." *Id*., 4:2-3. A POSITA would recognize that computer readable medium in the form of memory is necessarily required in order to store software and firmware modules capable of performing the logic and operations ascribed to the AS. There must be some place to store the "software/firmware module(s)" that Buckley teaches is provided on the AS, and that is the purpose of memory, which is a computer-readable medium that is encoded with software and firmware codes with "logic/structure" for performing that actions performed by the AS as discussed above.

e. **Element 103[d]: "receive from the wireless device an access code request message including a destination node identifier associated with the destination node and a location identifier identifying a geographical location of the wireless device;"**

119. In my opinion, Buckley teaches this element. *See* Element 51[a].

f. **Element 103[e]: "cause a routing controller to produce an access code identifying a communications channel on a gateway through which communications between the wireless device and the destination node can be**

conducted, in response to receiving the access code request message, such that the access code is produced based on the location identifier of the access code request message received from the wireless device and such that the access code is useable by the wireless device to initiate communications with the destination node through the communications channel; and"

120. In my opinion, Buckley teaches this element. *See* Element 51[b].

g. **Element 103[f]: "transmit an access code reply message including the access code to the wireless device, wherein the access code in the access code reply message is based on the location identifier and is used by the wireless device to initiate communications with the destination node through the communication channel."**

121. In my opinion, Buckley teaches this element. *See* Element 51[c].

11. Claim 104: "The apparatus of claim 103, wherein the network interface comprises a non-voice network interface, and wherein the codes for directing the processor circuit to receive include codes for directing the processor circuit to cause the access code request message to be received using the non-voice network interface on a non-voice network."

122. In my opinion, Buckley teaches this claim. *See* Claim 52; Element 77[a].

12. Claim 108: "The apparatus of claim 103 further comprising the routing controller."

123. In my opinion, Buckley teaches this claim. *See* Element 51[b].

13. Claim 109: "The apparatus of claim 108, wherein the routing controller is operably configured to cause the access code to be selected from a pool of access codes, wherein none of the access codes in the pool of access codes identifies a respective telephone number."

124. In my opinion, Buckley teaches this claim. *See* Claim 57; Claim 63.

125. In this instance, the access code is the IP address of the AS node, as explained in Claim 63, and the asserted pool is Buckley's pool comprised of those IP addresses. EX1005, 5:6-7 ("[I]t may be desirable to provide for different pools of IMRNs").

14. Claim 110: "The apparatus of claim 109, wherein the routing controller is operably configured to determine from the location identifier a local calling area associated with the wireless device and to select an access code associated with a calling area matching the local calling area associated with the wireless device."

126. In my opinion, Buckley teaches this claim.

127. The IMRN "terminate[s] on the AS node" (EX1005, 4:46-47), which is "disposed in the user's ***home*** IMS network" and thus enables a local call, because routing a call to the "home" node is inherently different from routing a call to something other than the "home" node. *Id*., 7:29-34, 6:44-54 (teaching "message flow between the UE device ***and the home IMS network's AS node***" such that "the UE device and its ***home IMS AS node [are] operable to facilitate CS-originated SIP calls***"), 8:22-47. The benefit of using a local number to avoid such charges was well known in the art. *See, e.g.*, EX1014 at Abstract (teaching "a method of providing a local access number"), [0036] ("[T]he subscriber may use the local access number to connect to a chosen long distance service provider."); EX1001 at 1:20-28 ("One known technique for avoiding the long distance charges of mobile

telephone service providers is to use a 'calling card'. A 'calling card' may permit the user of the mobile telephone to place a call to a local telephone number…. The user may thus avoid the long distance charges of the mobile telephone service provider, which may be higher than the charges for using the 'calling card'."). Relatedly, a POSITA would recognize that enabling such a local call is one reason to "map[]" the IMRN to "***all*** of the received SIP call information," as Buckley teaches, given that the SIP invite message includes location information. *See* EX1005, 6:2-3. A POSITA would at least have found it obvious that the selected IMRN would enable a local call to be made to achieve these benefits, (i.e., avoiding unnecessary long-distance charges), by using the location information that Buckley already required in an IMRN selection process. EX1005, 6:2-3. The IMRN (access code) is associated with a calling area matching the local calling area associated with the wireless device, which is how the IMRN enables a local call as discussed above.

128. As discussed above in Element 50[a][ii], the location identifier (the SIP URI and/or P-Preferred ID) identifies the location of the wireless device, so in Buckley's process of selecting an IMRN that enables a local call as discussed above, the local calling area associated with the wireless device must be determined from the location identifier, otherwise a local call would not be enabled.

15. Claim 124: "The apparatus of claim 103, wherein the routing controller is operably configured to enable communications to be established between the wireless device and the destination node when the wireless device seeks to establish a call to the destination node using the access code transmitted in the access code reply message when a timestamp associated with the access code indicates that usability of the access code has not expired and to prevent the communications from being established when the timestamp indicates that the usability of the access code has expired."

129. In my opinion, Buckley teaches this claim. *See* Element 51[b].

130. Buckley teaches that the IMRN (E.164 number) (access code) expires after a period of time, using the "Timer" mechanisms identified, for example, in Figure 3A (elements 314, 326, 328, and 330). EX1005, 2:51-59 ("If the timer has expired, the mobile device may refrain from utilizing the E.164 number [access code] (now deassigned due to timer expiration) in the CS call setup message and alternatively obtain and utilize a new E.164 number…."); *see also id.*, 21:18-21.

131. Buckley also teaches that the AS can send a timestamp associated with the IMRN (access code) to the wireless device, where such timestamp can be used to determine when the access code expires. *See* EX1005, 20:21-25 ("[N]etwork node sends UE device a SIP 200 OK message which has the selected E.164 number contained within it. A time or timer value which defines a time period for which the selected E.164 number remains assigned to UE device may also be included."); *id.*, 21:18-21 ("[A]fter assignment of

the E.164 number to the UE device, the network node and/or UE device initializes a timer with the timer value and runs the timer. If the timer expires, the E.164 number becomes deassigned"). Buckley teaches including the timestamp in the SIP Response message (access code reply message) because the UE needs the timestamp in order for the "UE device [to] initialize[] a timer with the timer value" (EX1005, 21:18-21), and Buckley teaches that timer information is "normal[ly]" included in SIP Response messages. EX1005, 7:25-28 ("It should be appreciated that this timer may be provided in addition to normal SIP timers as this operation is known to provide a SIP 380 Response with specific information within a certain timeframe."). At a minimum, a POSITA would find it obvious to include such timer information in the SIP Response message (access code reply message) in order to provide the UE (mobile phone) with the time information Buckley teaches the UE needs in order to initialize a timer, and because time information is already included in the SIP Response message such that it would be efficient to additionally include similar time information.

16. Claim 130

a. Element 130[preamble]: "A method of operating an apparatus for enabling a wireless device to establish communications with a destination node, the method comprising:"

132. In my opinion, Buckley teaches this element. *See* Element 51[preamble].

b. **Element 130[a]: "receiving from the wireless device a request message including a destination node identifier associated with the destination node and a location identifier associated with a geographical location of the wireless device, wherein the location identifier comprises a first Internet Protocol (IP) address associated with the wireless device;"**

133. In my opinion, Buckley teaches this element. *See* Element 51[a], Claim 60.

c. **Element 130[b]: "in response to receiving the request message, producing an access code identifying a second Internet Protocol (IP) address associated with an IP network communication device through which communications between the wireless device and the destination node can be conducted, wherein the access code is produced based on the location identifier received from the wireless device, wherein the access code is useable by the wireless device to initiate communications with the destination node through the IP network communication device; and"**

134. In my opinion, Buckley teaches this element. *See* Element 51[b].

135. Buckley teaches, or at least renders obvious, that the IMRN (access code) identifies a second IP address associated with the AS (IP network communication device). Claim 63. (The "first" IP address comprises the location identifier of the caller's wireless device, as discussed in Element 130[a].) A POSITA would have recognized the AS is an IP network communication devices because it can connect to IP networks. EX1005, Fig. 1 (depicting the AS connects to the "IMS [***IP*** Multimedia Subsystem] Core Network"); Claim 52. Buckley also teaches that the IMRN (access code)

terminates on the AS that connects the wireless device and the destination node. Element 51[b][ii]. It would have been obvious for the access code communicated back to the mobile telephone to be an IP address (as the IMRN or in addition to it), as discussed in Claim 63, so that a wireless device transitioning to, or initiating, a VoIP call could communicate directly with the AS on the IP network. The wireless device uses the IMRN (access code) to initiate communications with the destination node. Element 51[c][ii].

d. **Element 130[c]: "transmitting a reply message including the access code to the wireless device, wherein the second Internet Protocol (IP) address is based on the location identifier and is used by the wireless device to initiate communications with the destination node through a communication channel on the IP network communication device."**

136. In my opinion, Buckley teaches this element. *See* Element 51[c].

137. Buckley teaches, or at least renders obvious, the IMRN (access code) comprises a second IP address. Claim 63. Buckley teaches the IMRN is based on the location identifier. Claim 51[b][iii].

138. Buckley teaches the AS converts the CS call setup initiated by the UE with the IMRN (access code) to a SIP call setup on a PS network with the original callee URI. EX1005, 6:14-23 ("[A]ppropriate call setup is then initiated by the UE device using the selected IMRN, whereby the accepted IMRN is returned to the AS node since it terminates thereat. Upon receipt of the IMRN

at the AS node … the called party's SIP URI or Tel URI … is utilized by the AS node for effectuating the SIP session with the called party by producing and sending a SIP Invite message"). Indeed, teaching the transition of calls initiated on a CS network to a PS network is core to Buckley's invention. *See id*., 1:24-28 (disclosing "managing call routing in a network environment including a circuit-switched (CS) network and an IP multimedia subsystem (IMS) network [which is a PS network]"). The SIP call setup on a PS network establishes the call through a packet-switched IP network in response to a call received at the IP address that is or is mapped to the IMRN (as discussed above in Element 130[b]), as SIP is a process designed for IP networks.

17. Claim 133: "The method of claim 130 further comprising, if the destination node is a PSTN telephone on the public switched telephone network (PSTN), establishing communications from the wireless device to a communications supplier gateway operable to connect to the PSTN telephone via the public switched telephone network (PSTN)."

139. In my opinion, Buckley teaches this element. *See* Element 51[b].

140. Buckley's AS node is a gateway because it is capable of converting CS network (PSTN) call setups to SIP call setups on a PS network (IP) and thus can bridge network using different protocols. EX1005, 1:23-28 ("[T]he present disclosure is directed to a system and method for managing call routing in a network environment including a circuit-switched (CS) network

and an IP multimedia subsystem (IMS) network), wherein a CS-originated IP call (e.g. based on the Session Initiation Protocol or SIP) is to be routed using the IMS network infrastructure."). Buckley further teaches that UE's can "initiate calls to ***both*** IP-only subscribers and conventional circuit-switched telephony [PSTN] subscribers ***using either one of the domains***" (EX1005; 1:40-42); thus, if the callee's communication device (destination node) is a PSTN telephone on the PSTN, Buckley's AS node can also establish communications from the caller's wireless device to the callee's PSTN telephone via the PSTN domain. Buckley's AS is a communications supplier gateway because it is a "part of the core" network of the network provider to connect callers and callees. EX1005, 4:25-26.

18. Claim 138: "The method of claim 51, wherein the access code reply message identifies an Internet Protocol (IP) network address of the communications channel through which the communications can be conducted, wherein the access code is useable by the wireless device to initiate the communications with the destination node through the communications channel."

141. In my opinion, Buckley teaches this claim. *See* Claim 63.

142. Buckley teaches the SIP Response message (access code reply message) includes an IMRN (access code). EX1005, 7:36-42 ("[T]he network node (in this example, the IMS AS node) dynamically allocates or otherwise identifies a selected IMRN mapped to the call information or parameters … and returns

it back to UE device 302 via SIP 380 [Response] message 316."). The IMRN (access code) identifies an IP address as discussed above with respect to Claim 63. Communications with the destination node utilize the IP communication channel. Claim 130[c].

19. Claim 139: "The apparatus of claim 103, wherein the access code reply message identifies an Internet Protocol (IP) network address associated with the communications channel through which the communications can be conducted, wherein the Internet Protocol (IP) network address is useable by the wireless device to initiate the communications with the destination node through the communications channel."

143. In my opinion, Buckley teaches this claim. *See* Claim 138.

B. <u>Ground II</u>: Claims 63, 109, 130, 133, and 138-139 Are Obvious Over Buckley in View of Ejzak.

1. Motivation to Combine

144. A POSITA would have been motivated to modify Buckley with Ejzak because both references are in the field of call routing and are directed to the same problem of improving call routing, including specifically across packet-switched and circuit-switched networks. *Compare* EX1005 (Buckley), Abstract ("Methods and apparatus for use in processing Session Initiation Protocol (SIP) calls in a network environment which includes a circuit-switched (CS) network and an Internet Protocol (IP) multimedia subsystem (IMS) network"), *with* EX1007 (Ejzak), 2:35-38 ("[T]he present invention provides a communication system that … allows for interworking between CS

domains and PS domains."). Further, as described in the background sections above, Buckley and Ejzak rely on a substantially similar network architecture, employing network entities with substantially the same functionality throughout. *Compare* EX1005 (Buckley), Figure 3A *with* EX1007 (Ejzak), Figure 1 (element 141) and Figure 3.

145. A POSITA also would be motivated to combine the references to use Ejzak's know technique to improve Buckley and to help achieve Buckley's expressly desired advantages. As background, Ejzak teaches responding to a SIP Invite message by determining how to route a call that may transition between PS and CS networks. *See* EX1007 (Ejzak), 8:58-9:12. Buckley's preferred embodiment specifically desires that capability of seamless transitions between such two networks. *See* EX1005 (Buckley), 3:35-40 ("Preferably, the UE device is capable of operating in multiple modes in that it can engage in both circuit-switched (CS) as well as packet-switches (PS) communications, and can transition from one mode of communications to another mode of communications without loss of continuity."). A POSITA would thus be motivated to combine Ejzak with Buckley to help achieve such transitions "without loss of continuity" by determining how to route a call that may transition between such networks in accordance with Ejzak's teachings.

146. A POSITA also would have been motivated to modify Buckley to query Ejzak's DNS/ENUM server with an E.164 address to identify a corresponding IP address that enables routing a call over an IP network, because an IP address would help ensure that calls can be completed to VoIP phones, and packet-switched IP networks, that lack direct PSTN access. This further achieves Buckley's goal of "managing call routing in a network environment including a circuit-switched (CS) network and an IP multimedia subsystem network" where a PSTN call may be completed over an IP network or where a particular user device may be operating over only an IP network. EX1005 (Buckley), 1:22-28, 1:51-57. Thus, basic market forces for enhanced reach and operability would prompt enhancing Buckley's design in accordance with Ejzak's teachings.

147. A POSITA would have had a reasonable expectation of success in combining Buckley with Ejzak. Buckley's system takes place in the context of SIP messaging, which Ejzak also employs. EX1005, 2:30-34 ("Methods and apparatus suitable for use in processing ***Session Initiation Protocol (SIP)*** calls in a network environment which includes a circuit-switched (CS) network and an Internet Protocol (IP) multimedia subsystem (IMS) network are described."); EX1007, 3:16-20 ("[T]he present invention is designed to utilize emerging Internet standards and protocols. An example of this is the

use of ***Session Initiation Protocol (SIP)*** for IMS signaling for establishing a call."). As Ejzak expressly recognizes and a POSITA would have understood, SIP is flexible by design and can accommodate the addition of new features. EX1007, 15:30-43 ("SIP has sufficient protocol features and extensibility to allow realization of enhanced features and services. … It is possible to define new features and provision their availability per subscriber, along with any parameters governing operation of the feature…. SIP option tags allow for independent definition of arbitrary new features, parameters associated with those features, and procedures associated with those features.").

148. Further, Ejzak teaches that its architecture "enables ***home control*** of all services—whereby the IMS provides feature and service ***control from the home network*** rather than the serving network—to be available for all circuit-switched services" and Buckley's preferred messaging protocol requires using the "home IMS network's AS node." EX1007, 1:64-67; EX1005, 6:45-46. Buckley further teaches that its "message flow between the UE device and the home IMS network's AS node may be mediated through a number of other appropriate network infrastructure elements" including a "mobile switching center (MSC) and a media gateway control function (MGCF) element" in the network. EX1005, 6:45-47; 6:51-53. Ejzak provides implementations for such "appropriate" network infrastructure elements" that can map numbers to IP

addresses and route bearer (voice) traffic over an IP network, including a Mobile Switching Center (MSC), an enhanced "interworking MSC (iMSC)," Mediate Gateway Control Functions (MGCF), and Domain Name Service (DNS) entities. EX1007, Figure 1, 1:11-12; 5:14; 4:40; 8:30; 8:36-43. Ejzak's teachings are thus readily incorporated into Buckley's network and SIP messaging, which is by its nature sufficiently flexible to accommodate adopting Ejzak's features.

149. Additionally, a POSITA would have had a reasonable expectation of success in combining Buckley with Ejzak because Buckley teaches that it would "be further recognized by those skilled in the art that the message flow between the UE device and the home IMS network's AS node may be mediated through a number of other appropriate network infrastructure elements, and may be implemented in a number of ways depending on the device capabilities as well as the network features and protocols being used." EX1005, 6:44-50. Buckley thus teaches that a POSITA would have readily understood how to implement the system in a matter that routes the traffic appropriately across the specific types of networks being used; as a result, a POSITA would have understood that Ejzak's DNS could be readily used to map a E.164 telephone number to an IP address (i.e., for the E.164 access code to identify an IP address) in order to have the bearer traffic (the voice call) traverse an IP

network, as taught in both Buckley and Ejzak. EX1005, e.g., 6:50-54 (teaching one "typical" message flow for "CS-originated SIP calls" that could terminate on a VoIP phone).

2. Claim 63[13]

150. In my opinion, Buckley in view of Ejzak render this element obvious. *See*; Ground I, Claim 63.

151. Ejzak teaches identifying a "replacement" IP address as a possible communications channel through which calls can be conducted, if the server determines that the call is to take place over a packet-switched network. *See* EX1007 8:67-91 ("DNS query resolves the replacement domain name to a set of ***IP addresses***."). A POSITA would have recognized that Ejzak's IP addresses are a possible channel through which the call can be conducted, including because Ejzak teaches that IP addresses can be used to connect to "media ***channels***." EX1007, 5:8-9. Indeed, the purpose of Ejzak assigning an IP address is to complete a call, which requires a communication channel. EX1007, Figure 5. In the combination asserted in this ground, Ejzak's "replacement" IP address would be included within Buckley's pool of access

[13] The complete text of the claims' corresponding portions is available in the claim listing attached hereto as Appendix A.

codes, intended for use in the event the call is to occur over an IP network. EX1005, 5:5-7 ("[I]t may be desirable to provide for different pools of IMRNs").

152. Additionally, Ejzak's system includes a DNS/ENUM service that interchangeably maps E.164 numbers to an appropriate IP address to route the call, and vice versa, including in the event that the call may need to transition from a PSTN to a VoIP call. EX1007, 8:29-36, 8:43-48. Hence, it would have been obvious that each E.164 number in Buckley's pool of IMRNs (access codes) also "identifies an IP network address as a possible channel through which said call can be conducted" as this claim requires because Ejzak teaches that it was well-known and beneficial to use DNS/ENUM services for that purpose, particularly for networks and devices that provide for both communication modes.

153. It would have been obvious for the access code communicated back to the mobile telephone to be an IP address (as the IMRN or in addition to it), as discussed in Ground I, Claim 63, so that a mobile telephone transitioning to, or initiating, a VoIP call could communicate directly with the network entities for the IP network identified by Ejzak's network selection procedures.

3. Claim 109

154. Buckley in view of Ejzak render this claim obvious. *See* Ground I, Claim 109.

155. In this instance, the access code is Ejzak's IP address, as explained in Claim 63, and the asserted pool is Buckley's pool comprised of Ejzak's IP addresses. EX1005, 5:6-7 ("[I]t may be desirable to provide for different pools of IMRNs").

4. Claim 130

a. **Element 130[preamble]**

156. In my opinion, Buckley in view of Ejzak render this element obvious. *See* Ground I, Element 130[preamble].

b. **Element 130[a]**

157. In my opinion, Buckley in view of Ejzak render this element obvious. *See* Ground I, Element 130[a].

c. **Element 130[b]**

158. In my opinion, Buckley in view of Ejzak render this element obvious. *See* Ground I, Element 130[b]; Ground II, Claim 63.

159. Ejzak also teaches the IP address can identify a SIP server (IP network communication device). EX1007, 8:47-48("A subsequent query to DNS 165 with that domain name determines the IP address of the SIP server."). SIP servers perform the functions required to set up SIP communication channels. *Id*., 10:52 ("S-CSCFs 303 and 304 are preferably stateful SIP servers."), 10:61-11:5 ("The functions performed by S-CSCFs 303 and 304 include, but are not limited to, receiving and processing SIP-level registrations from

Subscribers, providing Session control for the registered endpoint Sessions, and providing Service triggers."); 11:45-52 ("For a mobile-originated call to a PSTN address, S-CSCF 303 sends the SIP request to BGCF 144 within the operator's network. … For a mobile-terminated call to UE 311 being served at iMSC server 301 in its home network, S-CSCF 304 sends the SIP request or response directly to iMSC server 301.").

d. **Element 130[c]**

160. In my opinion, Buckley in view of Ejzak render this element obvious. *See* Ground I, Element 130[c]; Ground II, Element 130[b].

5. Claim 133

161. In my opinion, Buckley in view of Ejzak render this claim obvious. *See* Ground I, Claim 133.

162. Ejzak also teaches establishing communications from the UE (wireless device) to the BGCF (Breakout ***Gateway*** control function) to connect to a PSTN telephone. EX1007, 11:25-26 ("S-CSCF 303 interacts with BGCF 144 and MGCF 145 for calls to PSTN 161."); 11:45-47 ("For a mobile-originated call to a PSTN address, S-CSCF 303 sends the SIP request to BGCF 144 within the operator's network."); 4:46-47 ("To select a ***PSTN gateway, BGCF*** 144 in the home network receives the call origination message."). A POSITA would have found it obvious to include Ejzak's BGCF as one of the

"appropriate logic/structure/software/firmware module(s)" Buckley teaches are provided to the AS. EX1005, 4:42-45.

6. Claim 138

163. In my opinion, Buckley in view of Ejzak render this claim obvious. *See* Ground I, Claim 138; Ground II, Claim 63.

7. Claim 139

164. In my opinion, Buckley in view of Ejzak render this claim obvious. *See* Ground I, Claim 139; Ground II, Claim 63.

C. Ground III: Claims 51-52, 57, 60, 63, 65, 67, 73, 77, 103-104, 108-110, 124, 130, 133, and 138-139 Are Obvious Over Buckley in view of Bates.

1. Motivation to Combine

165. Bates builds upon Buckley's disclosed transmission of location information, and further informs a POSITA why such location information is important in selecting a temporary number that will optimize call routing and enable a local call. In my opinion, a POSITA would have been motivated to modify Buckley with Bates for a number of reasons.

166. Both references are in the field of call routing and are directed to improving call routing. Both teach methods of routing PSTN and VoIP calls across packet-switched networks and circuit-switched networks. *Compare* EX1005 (Buckley), Abstract ("Methods and apparatus for use in processing Session Initiation Protocol (SIP) calls in a network environment which includes a

circuit-switched (CS) network and an Internet Protocol (IP) multimedia subsystem (IMS) network"), *with* EX1009 (Bates), 14:26-31 (Invention "enabl[es] interoperability of non-traditional communication networks with established, traditional PSTN-based emergency services.").

167. The similarities between references is substantial, and a POSITA therefore would have had a reasonable expectation of success in combining Buckley with Bates. For example, both references teach selecting temporary telephone numbers to allow calls to be transferred between IP (*i.e.*, packet-switched (PS)) and circuit-switched (CS) (*e.g.*, PSTN) networks. *Compare* EX1005 (Buckley), 4:26-40, *with* EX1009 (Bates), 14:2-8, 26-37. Both references also teach selecting telephone numbers from a pool of numbers that are temporarily assigned in response to a communication request. *Compare* EX1005 (Buckley), 4:46-49, *with* EX1009 (Bates), 1:32-37. Both references also teach receiving a message that contains a user device's location information and using that received information when selecting a temporary number from the pool. *Compare* EX1005 (Buckley), 3:4-12, 4:41-49, 6:1-3, *with* EX1009 (Bates), 3:45-49, 18:67-19:2, 19:54-55. The analogous overlap can also be seen in comparing, for example, Figure 3A of Buckley with Figure 7 of Bates (particularly elements 705-725).

168. A POSITA also would have had a reasonable expectation of success in combining the references because Buckley expressly contemplates routing emergency calls, and Bates seeks to improve on such routing. For example, Buckley teaches XML code for establishing registration information used for emergency calls.[14] *See* EX1005 11:28-43 ("<!ELEMENT alternative-service (type, action, ics-mo-addres, reason)> <!ELEMENT type (emergency | MO-call)> … <!ELEMENT action (emergency-registration)>"), 12:8-18 (*e.g.*, "xs:element name='emergency-registration'"). A POSITA would therefore have understood that Bates's techniques and rationale for selecting a geographically-correct telephone number (described in further detail below) could be utilized by Buckley's system to select a local IMRN E.164 telephone number in the interest of optimizing routing decisions, including ensuring proper routing of emergency calls and avoiding unnecessary long distance and roaming charges. Multiple prior art references from the same inventor (Buckley, and also Andrew Allen) and assignee (Research in Motion) further confirm that a POSITA would have understood from Buckley's disclosure

[14] IETF RFC 4826 defines "XML Formats for Representing Resource Lists." IETF RFC 4190 defines "Frameworks for Supporting Emergency Telecommunication Services (ETS) in IP Telephony."

that Buckley's system included ensuring proper routing of emergency calls. *See* EX1006, 11:31-45 ("In other XML coding schemes, various additional elements may also be provided to indicate emergency sessions…. [A] <type> child element, set to 'emergency' to indicate that it was an emergency call"); EX1008, [0041]-[0042] ("XML body that includes an <alternative service> element with the <type> child element set to 'emergency', the UE shall automatically send an ACK request…. The UE can attempt an emergency call setup in the CS domain according to the procedures described in 3GPP TS 24.008."), Figure 6 ("emergency-registration"). And Buckley's SIP system is capable of accounting for Bates's location information. *See* EX1010 (RFC 3261),[15] 1 ("SIP also provides a registration function that allows users to upload their current locations for use by proxy servers.").

169. A POSITA also would have had a reasonable expectation of success in combining, and be motivated to combine, Buckley and Bates because they both teach techniques for establishing channels for bi-directional communication. Buckley's IMRN access code, which may be an E.164 telephone number as discussed above in Ground I, identifies a channel for communication. *See, e.g.*, EX1001 3:30-32 ("The access code may include a

[15] RFC 3261 is expressly cited in Buckley. EX1005, 5:29-33.

telephone number identifying a channel operably configured to cooperate with an IP network."). So too does Bates's geographically-correct telephone number identify a channel for communication. EX1009, 3:43-50, Fig 4 ("Establish the Communication Session Including the Temporary Telephone Number"). Buckley's and Bates's techniques for mapping such temporary numbers to call participants identifies the channels on which those participants communicate.

170. A POSITA would also have been motivated to modify Buckley with the teachings of Bates to produce better routing results, including for routing local calls. Buckley teaches the IMRN can be constructed based on "some relationship(s) to one or more of the parameters received in a message … from the UE device" in the SIP Invite message. EX1005, 3:4-12, 4:41-49. But Buckley does not expressly teach all such "relationship(s)" that a POSITA may use to map the received information to an IMRN. A POSITA would have been motivated to select available and known techniques for creating such relationships and mappings to embody Buckley's system. Bates provides one such technique that determines a "***geographically-correct telephone number*** (*e.g.*, a telephone number including a 202 area code for a call that was determined to have been made by a user located in the Washington, D.C. area, where the 202 area code indicates that the user placed the call from the

Washington, D.C. area)." EX1009, 3:43-50. A POSITA would thus appreciate that Bates's "geographically-correct" relationship technique is a known technique that can be used to improve or carry out Buckley's similar system with predictable results, and was an obvious-to-try option for mapping IMRNs to the "received SIP call information" that yields predictable results (a local call).

171. Bates itself teaches the communication service that selects temporary telephone numbers may do so whenever the server "determine[s] that the type of communication session requested by the user communication device 110 would benefit from having a temporary telephone number." EX1009, 7:55-64; *Id*. 11:26-31 ("The communications service provider 120 determines whether the type of communication session would benefit from a temporary telephone number (420). In one implementation, the communications service provider 120 may analyze the communication session request to determine whether a temporary telephone number would be beneficial."). Bates further teaches using a "geographically-correct telephone number" allows "the temporary telephone number [to be] used to … route the call to the appropriate public safety answering point [(PSAP)] for the location of the user communication device 110," which is helpful to ensure, for example, that a mobile phone caller with a Los Angeles area code does not get connected to

the Los Angeles 9-1-1 when that caller is traveling in New York. *See* EX1009, 12:28-32. Thus, a POSITA would have been motivated to modify Buckley with Bates to produce better call routing results, including in the emergency services context. Additionally, as discussed above, a POSITA would have known that selecting a "geographically correct" local telephone number can produce a local call that avoids long distance and roaming charges, providing further motivation to modify Buckley with Bates's techniques to obtain these predictable and desirable results. *See* EX1014 at Abstract, [0036]; EX1001 at 1:20-28.

2. Claim 51

a. Element 51[preamble][16]

172. In my opinion, Buckley in view of Bates renders this element obvious. *See* Ground I, Element 51[preamble].

b. Element 51[a]

173. In my opinion, Buckley in view of Bates renders this element obvious. *See* Ground I, Element 51[a].

[16] The complete text of the claims' corresponding portions is available in the claim listing attached hereto as Appendix A.

174. Bates also teaches "a request to place a call to a call recipient is received from the user" EX1009, Abstract. Moreover, Bates teaches the "user ***places a call*** for emergency services (e.g., a ***9-1-1 call***)." *Id*., 3:39-40. The 9-1-1 number is a callee identifier associated with the callee, which is emergency services.

175. Bates teaches the service "receive[s] a request from the user communication device to establish a communication session with the recipient communication device," and "the ***location key*** [(location identifier)] may be included in the request." EX1009, 11:12-15, 12:7-8. "The location key is an identifier used by the communications service provider 120 to identify a particular location" of the user's wireless device. *Id*. 9:27-29. That location key may be input by the user for transmission to the service provider's access server. *Id*., 8:56-9:1 ("[T]he user provides his or her current location by explicitly providing his or her address (e.g., entering location in a text box provided in a graphical user interface (GUI) of the communications service provider 120 or orally reciting location in a voice communication). In another implementation, the communications service provider 120 maintains a list of potential locations for the user and the user selects a location from a list provided by the communications service provider…."). Thus, Bates teaches that the access code request message includes a location identifier (Bates's "location key")

that is separate and distinctive from said callee identifier (9-1-1, in the asserted combination).

c. **Element 51[b]**

176. In my opinion, Buckley in view of Bates renders this element obvious. *See* Ground I, Element 51[b].

177. As described above, Buckley teaches receiving an access code request message from the wireless device. Ground I, Element 51[a]. In the asserted combination, however, the access code included in the access code reply message is selected based on Bates's techniques to select a geographically correct telephone number that would be used by the caller's mobile phone to enable a local call. EX1009, 18:67-19:2 ("A communications service provider may … select a temporary number that corresponds to the location of the user communication device."); 19:54-55 ("The temporary telephone number is a geographically-correct telephone number"); 3:45-49 ("***geographically-correct telephone number*** (*e.g.*, a telephone number including a 202 area code for a call that was determined to have been made by a user located in the Washington, D.C. area, where the 202 area code indicates that the user placed the call from the Washington, D.C. area)"). Either the caller's IP address or P-Preferred-ID as taught by Buckley or the location key as taught by Bates

would provide the location information necessary to utilize Bates technique to select a geographically-correct IMRN (access code).

178. Bates's geographically-correct telephone number selection technique, when applied in Buckley's system, yields a number that is different than the emergency number dialed (*e.g.* 9-1-1) because the geographically-correct telephone number will have a local area code, such as 202 in the Washington, D.C. example. EX1009, 3:43-50. Bates's technique to select a geographically-correct telephone number (access code), when applied to Buckley's system, includes associating the telephone number with the location identifier (whether Buckley's caller's IP address or P-Preferred-ID or Bates's location key). The purpose of selecting a geographically-correct telephone number in the asserted ground is to choose a number that ensures the caller is placing a local call to local emergency services, and not (for example) placing a call to emergency services in California when the caller is in Washington, D.C, nor needlessly incurring long distance or roaming charges. EX1009 3:54-56 (Teaching the system "routes the call to the appropriate public safety answering point (PSAP) based on the location associated with the temporary telephone number").

179. A POSITA would have understood that the geographically correct telephone number used in Bates identifies a communications channel, similar to how

Buckley's telephone number identifies a communications channel, because the telephone number identifies the pathway for end-to-end communications during the communication session. The circuit itself is a channel in a circuit-switched network, where information entered into one end is transmitted directly to the other end, while in a packet-switched network, the purpose of Session ***Initiation*** Protocol is to establish the communication channel via RTP protocol that carries the media stream (*e.g.*, voice and video). EX1001 3:30-32. Additionally, the '234 Patent confirms that a telephone number identifies a communication channel. *See, e.g.*, EX1001 3:36-38 ("[t]he access code may include a telephone number identifying a channel operably configured to cooperate with an IP network."). Further, Bates's temporary number selection process and system described above is used to "***establish a communication session*** with an emergency services provider" or between "communication device[s]", and such a "communication session" is a channel. EX1009, 14:26-32, 4:48-61, 11:26-31, 12:17-21 ("The communications service provider 120 establishes the communication session requested by the user communication device 110 including the temporary telephone number in information used to establish the communication session (450)."), 15:28-30.

180. Additionally, Bates's "emergency services proxy server" comprises a routing controller because the emergency services proxy server facilitates

communication between a caller and destination node by assigning the "geographically correct telephone number" and establishing a call with the appropriate PSAP (which may be a caller or destination node) while informing the PSAP of the UE's location. *See* EX1009, 13:61-14:1 ("[T]he emergency services proxy server 524 may be configured to … relay the request to enhanced emergency service provider 540 including the temporary telephone number"); *Id*., 3:53-57 ("The traditional emergency services call handling system routes the call to the appropriate public safety answering point (PSAP) based on the location associated with the temporary telephone number and establishes the emergency services call between the user and the PSAP"); *Id*., 14:13-15 ("the user communication device may be able to receive a return call from the PSAP").

181. Like Buckley, Bates also teaches a gateway, as shown, for example, in this cropped portion of Figure 1 which illustrates the gateway spanning two different networks (*i.e.*, a packet-switched data network and a circuit-switched telephone network, that as described above in Ground I, would operate on different protocols):

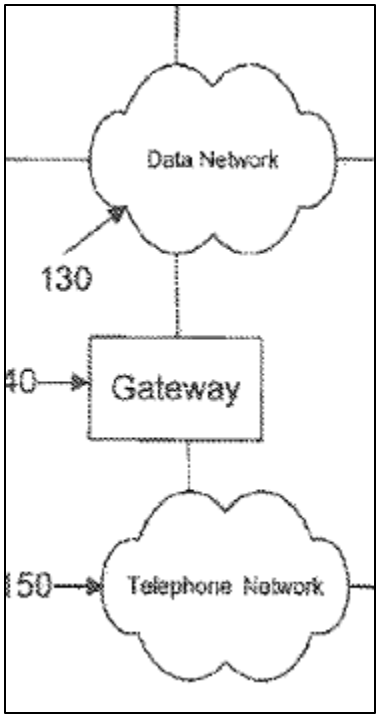

EX1009, 6:21-24 ("[T]he gateway 140 is a PSTN gateway configured to convert communications from data network 130 (e.g. IP packets) to communications suitable for delivery by a PSTN. By enabling communications between data network 130 and telephone network 150, the gateway 140 enables communications between a device connected only to data network 130 and a device connected only to the telephone network 150."). Buckley's AS is a gateway because Buckley's invention helps span different types of network as discussed above in Ground I, and a POSITA would further find it obvious that Buckley's AS would have the qualities of a gateway as expressly described by Bates in order to bridge different network types. EX1005, 2:30-34 ("Methods and apparatus suitable for use in

processing Session Initiation Protocol (SIP) calls in a network environment which includes a circuit-switched (CS) network and an Internet Protocol (IP) multimedia subsystem (IMS network) are described.”).

182. The remaining elements are taught by Buckley as described above in Ground I, Element 51[b], with Bates’s selection technique applied to Buckley.

d. **Element 51[c]**

183. In my opinion, Buckley in view of Bates renders this element obvious. *See* Ground I, Element 51[c].

3. Claim 52

184. In my opinion, Buckley in view of Bates renders this element obvious. *See* Ground I, Claim 52.

4. Claim 57

185. Buckley in view of Bates renders this element obvious. Ground I, Claim 57; Ground III, Element 51[b].

5. Claim 60

186. In my opinion, Buckley in view of Bates renders this claim obvious. *See* Ground I, Claim 60.

187. Bates also teaches the location identifier is an IP address. *See* EX1009, 9:4-9 (“[T]he communications service provider 120 may ***determine a current location*** of the user communication device 110 ***based on an IP address the user communication device*** is using to connect to the data network 130”).

Bates also teaches the user communication device may be "a wireless phone" that connects via a "data network [that] may include … a wired or ***wireless*** data pathway." *id*., 4:22-23, 6:10-13. A POSITA would recognize that when the user communication device is connected to a wireless network, its IP address would be wireless IP network address.

6. Claim 63

188. In my opinion, Buckley in view of Bates renders this claim obvious. *See* Ground I, Claim 63; Ground III, Element 52[b].

7. Claim 65

189. In my opinion, Buckley in view of Bates renders this claim obvious. *See* Ground I, Claim 65; Ground III, Element 52[b].

8. Claim 67

190. In my opinion, Buckley in view of Bates renders this claim obvious. *See* Ground I, Claim 67.

191. Bates teaches "the communications service provider may ***receive a request*** to establish a connection from the user communication device" as well as "a service level identifier (e.g., ***a screen name***) and password from the user communication device." EX1009, 8:20-25. Buckley teaches "mapp[ing]" the IMRN (access code) to "***all*** of the received SIP call information," such that the selected access code would be associated with the caller identifier (*e.g.*,

screen name) included in the access code request message. *See* EX1005, 6:2-3.

9. Claim 73

192. In my opinion, Buckley in view of Bates renders this claim obvious. *See* Ground I, Claim 73.

10. Claim 77

a. **Element 77[preamble]**

193. In my opinion, Buckley in view of Bates renders this element obvious. *See* Ground I, Element 77[preamble].

b. **Element 77[a]**

194. In my opinion, Buckley in view of Bates renders this element obvious. *See* Ground I, Element 77[a]; Ground III, Element 51[a]

c. **Element 77[b]**

195. In my opinion, Buckley in view of Bates renders this element obvious. *See* Ground I, Element 77[b]; Ground III, Element 51[b]

d. **Element 77[c]**

196. In my opinion, Buckley in view of Bates renders this element obvious. *See* Ground I, Element 77[c].

11. Claim 103

a. Element 103[preamble]

197. In my opinion, Buckley in view of Bates renders this element obvious. *See* Ground I, Element 103[preamble].

b. Element 103[a]

198. In my opinion, Buckley in view of Bates renders this element obvious. *See* Ground I, Element 103[a].

c. Element 103[b]

199. In my opinion, Buckley in view of Bates renders this element obvious. *See* Ground I, Element 103[b].

d. Element 103[c]

200. In my opinion, Buckley in view of Bates renders this element obvious. *See* Ground I, Element 103[c].

e. Element 103[d]

201. In my opinion, Buckley in view of Bates renders this element obvious. *See* Ground I, Element 103[d]; Ground III, Element 51[a].

f. Element 103[e]

202. In my opinion, Buckley in view of Bates renders this element obvious. *See* Ground I, Element 103[e]; Ground III, Element 51[b].

g. **Element 103[f]**

203. In my opinion, Buckley in view of Bates renders this element obvious. *See* Ground I, Element 103[f].

12. Claim 104

204. In my opinion, Buckley in view of Bates renders this claim obvious. *See* Ground I, Claim 104.

13. Claim 108

205. In my opinion, Buckley in view of Bates renders this claim obvious. *See* Ground I, Claim 108; Ground III, Element 51[b].

14. Claim 109

206. In my opinion, Buckley in view of Bates renders this claim obvious. *See* Ground I, Claim 109.

15. Claim 110

207. In my opinion, Buckley in view of Bates renders this claim obvious. *See* Ground I, Claim 110.

208. Bates's teaches selecting a temporary telephone number that has the same area code as the local calling area associated with the wireless device. EX1009, 3:43-50.(Teaching selecting "a telephone number including a 202 area code for a call that was determined to have been made by a user located in the Washington, D.C. area, where the 202 area code indicates that the user placed the call from the Washington, D.C. area."); Ground III, Element 52[b].

16. Claim 124

209. In my opinion, Buckley in view of Bates renders this element obvious. *See* Ground I, Claim 124, Ground III, Element 52[b].

17. Claim 130

a. Element 130[preamble]

210. In my opinion, Buckley in view of Bates renders this element obvious. *See* Ground I, Element 130[preamble].

b. Element 130[a]

211. In my opinion, Buckley in view of Bates renders this element obvious. *See* Ground I, Element 130[a].

c. Element 130[b]

212. In my opinion, Buckley in view of Bates renders this element obvious. *See* Ground I, Element 130[b].

d. Element 130[c]

213. In my opinion, Buckley in view of Bates renders this element obvious. *See* Ground I, Element 130[c].

18. Claim 133

214. In my opinion, Buckley in view of Bates renders this claim obvious. *See* Ground I, Claim 133; Ground II, 51[b].

215. Bates teaches its "emergency services proxy server may relay the call to the enhanced emergency service provider," which "is configured to facilitate

handling of a request to establish a communication session with an emergency services provider by enabling interoperability of non-traditional communication networks with established, traditional PSTN-based emergency services." EX1009, 14:9-10; 14:26-31.

19. Claim 138

216. In my opinion, Buckley in view of Bates renders this claim obvious. *See* Ground I, Claim 138.

20. Claim 139

217. In my opinion, Buckley in view of Bates renders this claim obvious. *See* Ground I, Claim 139.

D. Ground IV: Claims 63, 109, 130, 133, and 138-139 Are Obvious Over Buckley in View Bates, in Further View of Ejzak.

1. Motivation to Combine

218. In my opinion, a POSITA would have been motivated to combine Buckley with Bates for the reasons described above in Ground III. A POSITA would have been further motivated to combine Buckley with Ejzak for the reasons described above in Ground II. In that ground, Ejzak's DNS/ENUM server provides the ability for any E.164 number (including those used in, and selected from, the pools in Buckley and Bates) to identify an IP address that can be used to route a call. EX1007, 8:29-36; 8:43-48; 8:67-91. Ejzak's also provides the ability to replace an E.164 number from the pool with an IP

address used to route the call. *Id*. Ejzak's teachings may therefore be incorporated into the combination of Buckley with Bates in the same way that it can be incorporated into Buckley as described above in Ground II; in other words, Buckley's pool is able to accommodate both techniques, each motivated for the reasons set forth above in Grounds II and III. EX1005, 5:5-6 ("To allow flexibility, it may be desirable to provide for different pools of IMRNs….").

2. Claim 63[17]

219. In my opinion, Buckley in view of Bates, in further view of Ejzak renders this element obvious. *See* Ground III, Claim 63; Ground II, Claim 63.

3. Claim 109

220. In my opinion, Buckley in view of Bates, in further view of Ejzak render this claim obvious. *See* Ground II, Claim 109.

[17] The complete text of the claims' corresponding portions is available in the claim listing attached hereto as Appendix A.

4. Claim 130

a. Element 130

221. In my opinion, Buckley in view of Bates, in further view of Ejzak renders this element obvious. *See* Ground III, Element 130[preamble]; Ground II, Element 130[preamble].

b. Element 130[a]

222. In my opinion, Buckley in view of Bates, in further view of Ejzak renders this element obvious. *See* Ground III, Element 130[a]; Ground II, Element 130[a].

c. Element 130[b]

223. In my opinion, Buckley in view of Bates, in further view of Ejzak renders this element obvious. *See* Ground III, Element 130[b]; Ground II, Element 130[b].

d. Element 130[c]

224. In my opinion, Buckley in view of Bates, in further view of Ejzak renders this element obvious. *See* Ground III, Element 130[c]; Ground II, Element 130[c].

5. Claim 133

225. In my opinion, Buckley in view of Bates, in further view of Ejzak renders this element obvious. *See* Ground III, Claim 133; Ground II, Claim 133.

6. Claim 138

226. In my opinion, Buckley in view of Bates, in further view of Ejzak renders this element obvious. *See* Ground III, Claim 138; Ground II, Claim 138.

7. Claim 139

227. In my opinion, Buckley in view of Bates, in further view of Ejzak renders this element obvious. *See* Ground III, Claim 139; Ground II, Claim 139.

IX. SECONDARY CONSIDERATIONS

228. I am not aware of any evidence of secondary considerations that would support a finding of non-obviousness. In particular, I am not aware of any commercial success of the alleged invention in the Challenged Claims; skepticism by those having ordinary skill in the art at the time of the alleged invention regarding the possibility, utility, or success of the alleged invention of the Challenged Claims; unexpected results achieved by the alleged invention of the Challenged Claims; any long-felt but unsolved need in the art that was satisfied by the alleged invention of the Challenged Claims; the failure of others to make the alleged inventions of the Challenged Claims; praise of the alleged invention in the Challenged Claims by those having ordinary skill in the art; or copying of the alleged invention in the Challenged Claims by others in the field.

X. CONCLUSION

229. Based on my analysis above, it is my opinion that the challenged claims of the ’721 Patent are obvious over Buckley alone, Buckley in view of Ejzak, Buckley in view of Bates, and Buckley in view of Bates in further view of Ejzak.

230. I hereby declare under penalty of perjury under the laws of the United States of America that the foregoing is true and correct, and that all statements made of my own knowledge are true and that all statements made on information and belief are believed to be true. I understand that willful false statements are punishable by fine or imprisonment or both. See 18 U.S.C. § 1001.

Date: June 30, 2022

Vijay Madisetti

Vijay Madisetti

APPENDIX A

No.	Element
51[preamble]	A method for enabling a wireless device to establish communications with a destination node, the method comprising:
51[a]	receiving from the wireless device an access code request message including a destination node identifier associated with the destination node and a location identifier identifying a geographical location of the wireless device;
51[b]	in response to receiving the access code request message, causing a routing controller to produce an access code identifying a communications channel on a gateway through which communications between the wireless device and the destination node can be conducted, the access code being based on the location identifier of the access code request message received from the wireless device, wherein the access code is useable by the wireless device to initiate communications with the destination node through the communications channel; and
51[c]	transmitting, to the wireless device, an access code reply message including the access code based on the location identifier, to cause the wireless device to use the access code to initiate communications with the destination node through the communications channel.
52	The method of claim 51, wherein receiving comprises receiving the access code request message on a non-voice network.
57	The method of claim 51, wherein causing the routing controller to produce the access code comprises causing the access code to be selected from a pool of access codes.
60	The method of claim 51, wherein the location identifier comprises an Internet Protocol (IP) address of the wireless device in a wireless IP network.
63	The method of claim 57, wherein at least one of the access codes in the pool of access codes identifies an IP network address as a possible communications channel through which the communications can be conducted.
65	The method of claim 57, wherein at least one of the access codes identifies a telephone number as a possible communications channel through which the communications can be conducted.
67	The method of claim 51, wherein the access code request message includes a caller identifier and wherein the method

	further comprises associating the caller identifier included in the access code request message with the access code produced by the routing controller.
73	The method of claim 51, wherein transmitting comprises transmitting the access code reply message on a non-voice network.
77[preamble]	An apparatus for enabling a wireless device to establish communications with a destination node, the apparatus comprising:
77[a]	means for receiving from the wireless device an access code request message including a destination node identifier associated with the destination node and a location identifier identifying a geographical location of the wireless device;
77[b]	means for causing a routing controller to produce an access code identifying a communications channel on a gateway through which communications between the wireless device and the destination node can be conducted, in response to receiving the access code request message, such that the access code is produced based on the location identifier of the access code request message received from the wireless device and such that the access code is useable by the wireless device to initiate communications with the destination node through the communications channel; and
77[c]	means for transmitting an access code reply message including the access code to the wireless device, wherein the access code in the access code reply message is based on the location identifier and is used by the wireless device to initiate communications with the destination node through the communications channel on the gateway.
103	An apparatus for enabling a wireless device to establish communications with a destination node, the apparatus comprising:
103[a]	a processor circuit including at least one processor;
103[b]	a network interface in communication with the processor circuit; and
103[c]	a non-transitory computer readable medium having stored thereon computer executable codes for directing the at least one processor to:

103[d]	receive from the wireless device an access code request message including a destination node identifier associated with the destination node and a location identifier identifying a geographical location of the wireless device;
103[e]	cause a routing controller to produce an access code identifying a communications channel on a gateway through which communications between the wireless device and the destination node can be conducted, in response to receiving the access code request message, such that the access code is produced based on the location identifier of the access code request message received from the wireless device and such that the access code is useable by the wireless device to initiate communications with the destination node through the communications channel; and
103[f]	transmit an access code reply message including the access code to the wireless device, wherein the access code in the access code reply message is based on the location identifier and is used by the wireless device to initiate communications with the destination node through the communication channel.
104	The apparatus of claim 103, wherein the network interface comprises a non-voice network interface, and wherein the codes for directing the processor circuit to receive include codes for directing the processor circuit to cause the access code request message to be received using the non-voice network interface on a non-voice network.
108	The apparatus of claim 103 further comprising the routing controller.
109	The apparatus of claim 108, wherein the routing controller is operably configured to cause the access code to be selected from a pool of access codes, wherein none of the access codes in the pool of access codes identifies a respective telephone number.
110	The apparatus of claim 109, wherein the routing controller is operably configured to determine from the location identifier a local calling area associated with the wireless device and to select an access code associated with a calling area matching the local calling area associated with the wireless device.
124	The apparatus of claim 103, wherein the routing controller is operably configured to enable communications to be established between the wireless device and the destination node when the wireless device seeks to establish a call to the destination node

	using the access code transmitted in the access code reply message when a timestamp associated with the access code indicates that usability of the access code has not expired and to prevent the communications from being established when the timestamp indicates that the usability of the access code has expired.
130[preamble]	A method of operating an apparatus for enabling a wireless device to establish communications with a destination node, the method comprising:
130[a]	receiving from the wireless device a request message including a destination node identifier associated with the destination node and a location identifier associated with a geographical location of the wireless device, wherein the location identifier comprises a first Internet Protocol (IP) address associated with the wireless device;
130[b]	in response to receiving the request message, producing an access code identifying a second Internet Protocol (IP) address associated with an IP network communication device through which communications between the wireless device and the destination node can be conducted, wherein the access code is produced based on the location identifier received from the wireless device, wherein the access code is useable by the wireless device to initiate communications with the destination node through the IP network communication device; and
130[c]	transmitting a reply message including the access code to the wireless device, wherein the second Internet Protocol (IP) address is based on the location identifier and is used by the wireless device to initiate communications with the destination node through a communication channel on the IP network communication device.
133	The method of claim 130 further comprising, if the destination node is a PSTN telephone on the public switched telephone network (PSTN), establishing communications from the wireless device to a communications supplier gateway operable to connect to the PSTN telephone via the public switched telephone network (PSTN).
138	The method of claim 51, wherein the access code reply message identifies an Internet Protocol (IP) network address of the communications channel through which the communications can be conducted, wherein the access code is useable by the wireless

	device to initiate the communications with the destination node through the communications channel.
139	The apparatus of claim 103, wherein the access code reply message identifies an Internet Protocol (IP) network address associated with the communications channel through which the communications can be conducted, wherein the Internet Protocol (IP) network address is useable by the wireless device to initiate the communications with the destination node through the communications channel.