UNITED STATES PATENT AND TRADEMARK OFFICE

UNITED STATES DEPARTMENT OF COMMERCE
United States Patent and Trademark Office
Address: COMMISSIONER FOR PATENTS
P.O. Box 1450
Alexandria, Virginia 22313-1450
www.uspto.gov

APPLICATION NO.	ISSUE DATE	PATENT NO.	ATTORNEY DOCKET NO.	CONFIRMATION NO.
17/082,877	10/11/2022	11466529	36362.0150U5	1013

23859 7590 09/21/2022

BALLARD SPAHR LLP
SUITE 1600
999 PEACHTREE STREET
ATLANTA, GA 30309-4421

ISSUE NOTIFICATION

The projected patent number and issue date are specified above.

Determination of Patent Term Adjustment under 35 U.S.C. 154 (b)
(application filed on or after May 29, 2000)

The Patent Term Adjustment is 0 day(s). Any patent to issue from the above-identified application will include an indication of the adjustment on the front page.

If a Continued Prosecution Application (CPA) was filed in the above-identified application, the filing date that determines Patent Term Adjustment is the filing date of the most recent CPA.

Applicant will be able to obtain more detailed information by accessing the Patent Application Information Retrieval (PAIR) WEB site (http://pair.uspto.gov).

Any questions regarding the Patent Term Extension or Adjustment determination should be directed to the Office of Patent Legal Administration at (571)-272-7702. Questions relating to issue and publication fee payments should be directed to the Application Assistance Unit (AAU) of the Office of Patents Stakeholder Experience (OPSE), Stakeholder Support Division (SSD) at (571)-272-4200.

INVENTOR(s) (Please see PAIR WEB site http://pair.uspto.gov for additional inventors):

CHRISTOPHER L. DRENTH, Burlington, CANADA;
Gordon Stewart, Claremont, AUSTRALIA;
Khaled Hejleh, Peppermint Grove, AUSTRALIA;

APPLICANT(s) (Please see PAIR WEB site http://pair.uspto.gov for additional applicants):

LONGYEAR TM, INC., Salt Lake City, UT;
GLOBALTECH CORPORATION PTY LTD, CANNING VALE, WA;

The United States represents the largest, most dynamic marketplace in the world and is an unparalleled location for business investment, innovation, and commercialization of new technologies. The USA offers tremendous resources and advantages for those who invest and manufacture goods here. Through SelectUSA, our nation works to encourage and facilitate business investment. To learn more about why the USA is the best country in the world to develop technology, manufacture products, and grow your business, visit SelectUSA.gov.

Document Description: Issue Fee Payment (PTO-85B)

Issue Fee Transmittal Form

Application Number	Filing Date	First Named Inventor	Atty. Docket No.	Confirmation No.
17082877	28-Oct-2020	CHRISTOPHER L. DRENTH	36362.0150U5	1013

TITLE OF INVENTION :

CORE BARREL HEAD ASSEMBLY WITH AN INTEGRATED SAMPLE ORIENTATION TOOL AND SYSTEM FOR USING SAME

Entity Status	Application Type	Art Unit	Class - Subclass	EXAMINER
Regular Undiscounted	Utility under 35 USC 111(a)	3676	044000	MICHAEL WILLS III

Issue Fee Due	Publication Due	Total Fee(s) Due	Date Due	Prev. Paid Fee
$1200	$0	$1200	12-Aug-2022	$0

1.Change of Correspondence Address and/or Indication Of Fee Address (37 CFR 1.33 & 1.363)

Current Correspondence Address:	Current Indicated Fee Address :
23859 BALLARD SPAHR LLP SUITE 1600 999 PEACHTREE STREET ATLANTA GA 30309-4421 UNITED STATES 678 420 9300 USpatentmail@ballardspahr.com	
☐ Change of correspondence address requested, system generated AIA/122-EFS form attached	☐ Fee Address indication requested, system generated SB/47-EFS form attached

2.Entity Status

Change in Entity Status

○ Applicant certifying micro entity status; system generated Micro Entity certification form attached. See 37 CFR 1.29.
Note: Absent a valid certification of micro entity status, issue fee payment in the micro entity amount will not be accepted at the risk of application abandonment. If this box is checked, you will be prompted to choose a micro entity status on the gross income basis (37 CFR 1.29(a)) or the institution of higher education basis (37 CFR 1.29(d)), and make the applicable certification online.

○ Applicant asserting small entity status. See 37 CFR 1.27.
Note: If the application was previously under micro entity status, checking this box will be taken to be a notification of loss of entitlement to micro entity status.

◉ Applicant changing to regular undiscounted fee status.
Note: Checking this box will be taken to be a notification of loss of entitlement to small or micro entity status, as applicable.

Document Description: Issue Fee Payment (PTO-85B)

3.The Following Fee(s) Are Submitted:

☒ Issue Fee

☐ I authorize USPTO to apply my previously paid issue fee to the current fees due

☐ Publication Fee

☐ The Director is hereby authorized to apply my previously paid issue fee to the current fee due and to charge deficient fees to Deposit Account Number _____

☐ Advance Order - # of copies _____

☒ If i**n addition to** the payment of the issue fee amount submitted with this form, there are any discrepancies in any amount(s) due, the Director is authorized to charge any deficiency or credit any overpayment, to Deposit Account Number 14-0629 . The **issue fee must be submitted** with this form. **If payment of the issue fee does not accompany this form, checking this box and providing a deposit account number will NOT be effective to satisfy full payment of the fee(s) due.**

4.Firm and/or Attorney Names To Be Printed

NOTE: If no name is listed, no name will be printed
For printing on the patent front page, list to be displayed as entered

1. BALLARD SPAHR LLP
2.
3.

5.Assignee Name(s) and Residence Data To Be Printed

PLEASE NOTE: Unless an assignee is identified below, no assignee data will appear on the patent. If an assignee is identified below, the document has been filed for recordation as set forth in 37 CFR 3.11. Completion of this form is NOT a substitute for filing an assignment.

Name	City	State	Country	Category
LONGYEAR TM, INC.	SALT LAKE CITY	UTAH	UNITED STATES	corporation
GLOBALTECH CORPORATION PTY LTD	Forrestfield		AUSTRALIA	corporation

Document Description: Issue Fee Payment (PTO-85B)

6.Signature

I certify, in accordance with 37 CFR 1.4(d)(4) that I am an attorney or agent registered to practice before the Patent and Trademark Office who has filed and has been granted power of attorney in this application. I also certify that this Fee(s) Transmittal form is being transmitted to the USPTO via EFS-WEB on the date indicated below.

Signature	/Joseph P. Anderson III/	**Date**	08-11-2022
Name	Joseph P. Anderson III	**Registration Number**	59245

Electronic Patent Application Fee Transmittal

Application Number:	17082877
Filing Date:	28-Oct-2020
Title of Invention:	CORE BARREL HEAD ASSEMBLY WITH AN INTEGRATED SAMPLE ORIENTATION TOOL AND SYSTEM FOR USING SAME
First Named Inventor/Applicant Name:	CHRISTOPHER L. DRENTH
Filer:	Joseph P. Anderson
Attorney Docket Number:	36362.0150U5

Filed as Large Entity

Filing Fees for Utility under 35 USC 111(a)

Description	Fee Code	Quantity	Amount	Sub-Total in USD($)
Basic Filing:				
UTILITY APPL ISSUE FEE	1501	1	1200	1200
PUBL. FEE- EARLY, VOLUNTARY, OR NORMAL	1504	1	0	0
Pages:				
Claims:				
Miscellaneous-Filing:				
Petition:				
Patent-Appeals-and-Interference:				

Description	Fee Code	Quantity	Amount	Sub-Total in USD($)
Post-Allowance-and-Post-Issuance:				
Extension-of-Time:				
Miscellaneous:				
			Total in USD ($)	**1200**

Electronic Acknowledgement Receipt

EFS ID:	46389457
Application Number:	17082877
International Application Number:	
Confirmation Number:	1013
Title of Invention:	CORE BARREL HEAD ASSEMBLY WITH AN INTEGRATED SAMPLE ORIENTATION TOOL AND SYSTEM FOR USING SAME
First Named Inventor/Applicant Name:	CHRISTOPHER L. DRENTH
Customer Number:	23859
Filer:	Joseph P. Anderson
Filer Authorized By:	
Attorney Docket Number:	36362.0150U5
Receipt Date:	11-AUG-2022
Filing Date:	28-OCT-2020
Time Stamp:	11:44:01
Application Type:	Utility under 35 USC 111(a)

Payment information:

Submitted with Payment	yes
Payment Type	CARD
Payment was successfully received in RAM	$1200
RAM confirmation Number	E20228AB43580485
Deposit Account	
Authorized User	
The Director of the USPTO is hereby authorized to charge indicated fees and credit any overpayment as follows:	

File Listing:

Document Number	Document Description	File Name	File Size(Bytes)/ Message Digest	Multi Part /.zip	Pages (if appl.)
1	Issue Fee Payment (PTO-85B)	Web85b.pdf	65889 f5d26498eed68ce21e377057eedb73ef87303903	no	3
Warnings:					
Information:					
2	Fee Worksheet (SB06)	fee-info.pdf	40219 977e562cf8f8303dc413166c126da60198e18703	no	2
Warnings:					
Information:					
		Total Files Size (in bytes):	106108		

This Acknowledgement Receipt evidences receipt on the noted date by the USPTO of the indicated documents, characterized by the applicant, and including page counts, where applicable. It serves as evidence of receipt similar to a Post Card, as described in MPEP 503.

New Applications Under 35 U.S.C. 111
If a new application is being filed and the application includes the necessary components for a filing date (see 37 CFR 1.53(b)-(d) and MPEP 506), a Filing Receipt (37 CFR 1.54) will be issued in due course and the date shown on this Acknowledgement Receipt will establish the filing date of the application.
National Stage of an International Application under 35 U.S.C. 371
If a timely submission to enter the national stage of an international application is compliant with the conditions of 35 U.S.C. 371 and other applicable requirements a Form PCT/DO/EO/903 indicating acceptance of the application as a national stage submission under 35 U.S.C. 371 will be issued in addition to the Filing Receipt, in due course.
New International Application Filed with the USPTO as a Receiving Office
If a new international application is being filed and the international application includes the necessary components for an international filing date (see PCT Article 11 and MPEP 1810), a Notification of the International Application Number and of the International Filing Date (Form PCT/RO/105) will be issued in due course, subject to prescriptions concerning national security, and the date shown on this Acknowledgement Receipt will establish the international filing date of the application.

IN THE UNITED STATES PATENT AND TRADEMARK OFFICE

In re Application of	)	
	)	
DRENTH et al.	)	Art Unit: 3676
	)	
Application No.: 17/082,877	)	Examiner: Wills III, Michael R.
	)	
Filing Date: October 28, 2020	)	Confirmation No.: 1013
	)	
FOR: **CORE BARREL HEAD ASSEMBLY WITH AN INTEGRATED SAMPLE ORIENTATION TOOL AND SYSTEM FOR USING SAME**	)	

RESPONSE TO NOTICE TO FILE CORRECTED APPLICATION PAPERS
Filing Date Granted

MAIL STOP ISSUE FEE
Commissioner for Patents
P.O. Box 1450
Alexandria, VA 22313-1450

Ballard Spahr LLP
Customer Number 23859

Commissioner:

In response to the Notice to File Corrected Application Papers mailed, May 27, 2022 (the "Notice") in connection with the above-referenced patent Application, please enter the following amendment in the application and consider the following remarks.

Amendments to the Drawings begin on page 2 of this Paper.

Remarks begin on page 3 of this Paper.

Attachments:

1) One (1) Replacement Sheet showing FIG. 6;
2) Copy of the Notice to File Corrected Application Papers.

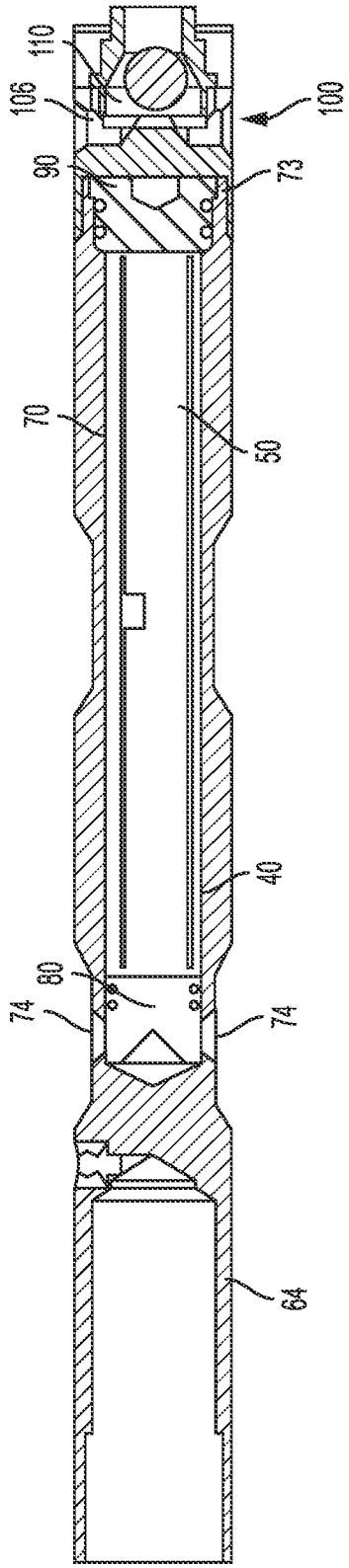

FIG. 6

UNITED STATES PATENT AND TRADEMARK OFFICE

UNITED STATES DEPARTMENT OF COMMERCE
United States Patent and Trademark Office
Address: COMMISSIONER FOR PATENTS
P.O. Box 1450
Alexandria, Virginia 22313-1450
www.uspto.gov

APPLICATION NO.	FILING DATE	FIRST NAMED INVENTOR	ATTORNEY DOCKET NO.	CONFIRMATION NO.
17/082,877	10/28 2020	CHRISTOPHER L. DRENTH	36362.0150U5	1013

23859 7590 05/27/2022
BALLARD SPAHR LLP
SUITE 1600
999 PEACHTREE STREET
ATLANTA, GA 30309-4421

EXAMINER
WILLS III, MICHAEL R

ART UNIT	PAPER NUMBER
3676	

NOTIFICATION DATE	DELIVERY MODE
05/27/2022	ELECTRONIC

Please find below and/or attached an Office communication concerning this application or proceeding.

The time period for reply, if any, is set in the attached communication.

Notice of the Office communication was sent electronically on above-indicated "Notification Date" to the following e-mail address(es):

USpatentmail@ballardspahr.com

UNITED STATES PATENT AND TRADEMARK OFFICE

Commissioner for Patents
United States Patent and Trademark Office
P.O. Box 1450
Alexandria, VA 22313-1450
www.uspto.gov

Application No. : 17082877
Applicant : Drenth
Filing Date : 10/28/2020
Date Mailed : 05/27/2022

NOTICE TO FILE CORRECTED APPLICATION PAPERS

Notice of Allowance Mailed

This application has been accorded an Allowance Date and is being prepared for issuance. The application, however, is incomplete for the reasons below.

Applicant is given two (2) months from the mail date of this Notice within which to respond. This time period for reply is extendable under 37 CFR 1.136(a) for only TWO additional MONTHS.

The informalities requiring correction are indicated in the attachment(s). If the informality pertains to the abstract, specification (including claims) or drawings, the informality must be corrected with an amendment in compliance with 37 CFR 1.121 (or, if the application is a reissue application, 37 CFR 1.173). Such an amendment may be filed after payment of the issue fee if limited to correction of informalities noted herein. See Waiver of 37 CFR 1.312 for Documents Required by the Office of Patent Publication, 1280 Off. Gaz. Patent Office 918 (March 23, 2004). In addition, if the informality is not corrected until after payment of the issue fee, for purposes of 35 U.S.C. 154(b)(1)(iv), "all outstanding requirements" will be considered to have been satisfied when the informality has been corrected. A failure to respond within the above-identified time period will result in the application being ABANDONED.

See attachment(s).

A copy of this notice MUST be returned with the reply. Please address response to "Mail Stop Issue Fee, Commissioner for Patents, P.O. Box 1450, Alexandria, VA 22313-1450".

/Chris Harmon/
Publication Branch
Office of Data Management
(571) 272-4200

Application No. 17082877 **Drawings filed: 10/28/2020**

IDENTIFICATION OF DRAWING DEFICIENCIES

- [ ] There is a hole or the image thereof within the illustration. FIG(s)
- [ ] The illustration is penetrated or traversed by a solid or broken line that is not intended to be part of the drawing, such as a dark line caused by a flaw in the copying process. FIG(s)
- [ ] An ink stamp or the image thereof obscures part of the illustration. FIG(s)
- [ ] The drawing is marred by black smudges, obliterations, or fax/copier marks (for example, speckles or dots in a substantial portion of the drawing). FIG(s)
- [ ] Figure numbers are duplicated or missing. FIG(s)
- [ ] Drawing sheet or figure is missing. FIG(s)
- [ ] Numbers, letters, or reference characters in the drawing have been crossed out or are illegibly handwritten. FIG(s)
- [ ] The character of the lines, numbers, and letters is poor. FIG(s)
- [ ] The drawing's background shows that the original drawing was made on graph paper or other paper with a pattern or decoration. FIG(s)
- [ ] The FIG. number label is placed in a location that causes the drawing to be read upside down. FIG(s)
- [X] Data, a reference number, or part of the drawing is truncated or missing, or a lead line has no reference number. FIG(s) 6
- [ ] The drawing and/or the FIG. label contain(s) foreign language. FIG(s)
- [ ] This utility application contains a photograph of a view that is capable of being illustrated as a line drawing. FIG(s)
- [ ] A petition under 37 CFR 1.84(a)(2) to accept color drawings has been granted, but the brief description of the drawings in the specification does not contain (or has not been amended to contain) the paragraph required by 37 CFR 1.84(a)(2)(iii).
- [ ] This reissue application contains added and/or amended drawings that are not labeled as “New” or “Amended” or “Canceled” as required by 37 CFR 1.173(b)(3). FIG(s)
- [ ] This Design reissue application contains a drawing that is labeled as “Canceled” but is not surrounded by brackets, or a drawing that is surrounded by brackets but is not labeled as “Canceled.” See 37 CFR 1.173(b)(3). FIG(s)
- [ ] OTHER:
- [ ] COMMENTS:

Electronic Acknowledgement Receipt

EFS ID:	45849910
Application Number:	17082877
International Application Number:	
Confirmation Number:	1013
Title of Invention:	CORE BARREL HEAD ASSEMBLY WITH AN INTEGRATED SAMPLE ORIENTATION TOOL AND SYSTEM FOR USING SAME
First Named Inventor/Applicant Name:	CHRISTOPHER L. DRENTH
Customer Number:	23859
Filer:	Benjamin D Kirk
Filer Authorized By:	
Attorney Docket Number:	36362.0150U5
Receipt Date:	01-JUN-2022
Filing Date:	28-OCT-2020
Time Stamp:	15:43:42
Application Type:	Utility under 35 USC 111(a)

Payment information:

Submitted with Payment	no

File Listing:

Document Number	Document Description	File Name	File Size(Bytes)/ Message Digest	Multi Part /.zip	Pages (if appl.)
1		36362_0150U5_Response_to_Notice_to_File_Corrected_Application_Papers.pdf	26007 df5b42d3d3b11017d3decc4e3414699c9e9662ad	yes	4

	Multipart Description/PDF files in .zip description		
	Document Description	**Start**	**End**
	Amendment after Notice of Allowance (Rule 312)	1	1
	Drawings-only black and white line drawings	2	2
	Applicant Arguments/Remarks Made in an Amendment	3	4

Warnings:

Information:

2	Drawings-only black and white line drawings	36362_0150U5_Replacment_Sheet.pdf	52721 0a4bda46cf62fe36c1fe41637f35e5f3b858d7e2	no	1

Warnings:

Information:

3	Miscellaneous Incoming Letter	36362_0150U5_Notice_CAPs.pdf	113778 16a3aa8cf69a08a1924c90839b9d0cdf62cb527f	no	3

Warnings:

Information:

Total Files Size (in bytes):	192506

This Acknowledgement Receipt evidences receipt on the noted date by the USPTO of the indicated documents, characterized by the applicant, and including page counts, where applicable. It serves as evidence of receipt similar to a Post Card, as described in MPEP 503.

New Applications Under 35 U.S.C. 111
If a new application is being filed and the application includes the necessary components for a filing date (see 37 CFR 1.53(b)-(d) and MPEP 506), a Filing Receipt (37 CFR 1.54) will be issued in due course and the date shown on this Acknowledgement Receipt will establish the filing date of the application.
National Stage of an International Application under 35 U.S.C. 371
If a timely submission to enter the national stage of an international application is compliant with the conditions of 35 U.S.C. 371 and other applicable requirements a Form PCT/DO/EO/903 indicating acceptance of the application as a national stage submission under 35 U.S.C. 371 will be issued in addition to the Filing Receipt, in due course.
New International Application Filed with the USPTO as a Receiving Office
If a new international application is being filed and the international application includes the necessary components for an international filing date (see PCT Article 11 and MPEP 1810), a Notification of the International Application Number and of the International Filing Date (Form PCT/RO/105) will be issued in due course, subject to prescriptions concerning national security, and the date shown on this Acknowledgement Receipt will establish the international filing date of the application.

AMENDMENTS TO THE DRAWINGS

Please replace originally filed FIG. 6 with the Figure provided on the attached Replacement Sheet.

Attachments: One (1) Replacement Sheets

REFLEX EXHIBIT 1013 - 16/432

REMARKS

The Notice objected to FIG. 6 for some portions of lead lines missing. Applicant submits herewith a replacement sheet showing a clearer rendering of FIG. 6 that shows unbroken lead lines. Applicant submits that these amendments do not add new matter.

REFLEX EXHIBIT 1013 - 17/432

CONCLUSION

It is believed that this submission is fully responsive to the Notice.

No fees are believed to be due; however, the Commissioner is hereby authorized to charge any additional fees which may be required, or credit any overpayment to Deposit Account No. 14-0629.

Respectfully submitted,

BALLARD SPAHR LLP

/Benjamin D. Kirk/
Benjamin D. Kirk
Registration No. 74,848

Ballard Spahr LLP
Customer Number 23859
(678) 420-9300 Phone
(678) 420-9301 Fax

In accordance with 37 C.F.R. § 1.8, I certify that this correspondence is being transmitted to the Commissioner for Patents, P.O. Box 1450, Alexandria, VA 22313-1450 via the USPTO's EFS-Web Electronic Filing System on June 1, 2022

/Benjamin D. Kirk/
Benjamin D. Kirk – Reg. No. 74,848

REFLEX EXHIBIT 1013 - 18/432

UNITED STATES PATENT AND TRADEMARK OFFICE

UNITED STATES DEPARTMENT OF COMMERCE
United States Patent and Trademark Office
Address: COMMISSIONER FOR PATENTS
P.O. Box 1450
Alexandria, Virginia 22313-1450
www.uspto.gov

APPLICATION NO.	FILING DATE	FIRST NAMED INVENTOR	ATTORNEY DOCKET NO.	CONFIRMATION NO.
17/082,877	10/28/2020	CHRISTOPHER L. DRENTH	36362.0150U5	1013

23859 7590 05/27/2022
BALLARD SPAHR LLP
SUITE 1600
999 PEACHTREE STREET
ATLANTA, GA 30309-4421

EXAMINER
WILLS III, MICHAEL R

ART UNIT	PAPER NUMBER
3676	

NOTIFICATION DATE	DELIVERY MODE
05/27/2022	ELECTRONIC

Please find below and/or attached an Office communication concerning this application or proceeding.

The time period for reply, if any, is set in the attached communication.

Notice of the Office communication was sent electronically on above-indicated "Notification Date" to the following e-mail address(es):

USpatentmail@ballardspahr.com

PTOL-90A (Rev. 04-07)

UNITED STATES PATENT AND TRADEMARK OFFICE

Commissioner for Patents
United States Patent and Trademark Office
P.O. Box 1450
Alexandria, VA 22313-1450
www.uspto.gov

Application No. : 17082877
Applicant : Drenth
Filing Date : 10/28/2020
Date Mailed : 05/27/2022

NOTICE TO FILE CORRECTED APPLICATION PAPERS

Notice of Allowance Mailed

This application has been accorded an Allowance Date and is being prepared for issuance. The application, however, is incomplete for the reasons below.

Applicant is given two (2) months from the mail date of this Notice within which to respond. This time period for reply is extendable under 37 CFR 1.136(a) for only TWO additional MONTHS.

The informalities requiring correction are indicated in the attachment(s). If the informality pertains to the abstract, specification (including claims) or drawings, the informality must be corrected with an amendment in compliance with 37 CFR 1.121 (or, if the application is a reissue application, 37 CFR 1.173). Such an amendment may be filed after payment of the issue fee if limited to correction of informalities noted herein. See Waiver of 37 CFR 1.312 for Documents Required by the Office of Patent Publication, 1280 Off. Gaz. Patent Office 918 (March 23, 2004). In addition, if the informality is not corrected until after payment of the issue fee, for purposes of 35 U.S.C. 154(b)(1)(iv), "all outstanding requirements" will be considered to have been satisfied when the informality has been corrected. A failure to respond within the above-identified time period will result in the application being ABANDONED.

See attachment(s).

A copy of this notice MUST be returned with the reply. Please address response to "Mail Stop Issue Fee, Commissioner for Patents, P.O. Box 1450, Alexandria, VA 22313-1450".

/Chris Harmon/
Publication Branch
Office of Data Management
(571) 272-4200

Application No. 17082877 **Drawings filed: 10/28/2020**

IDENTIFICATION OF DRAWING DEFICIENCIES

- [ ] There is a hole or the image thereof within the illustration. FIG(s)
- [ ] The illustration is penetrated or traversed by a solid or broken line that is not intended to be part of the drawing, such as a dark line caused by a flaw in the copying process. FIG(s)
- [ ] An ink stamp or the image thereof obscures part of the illustration. FIG(s)
- [ ] The drawing is marred by black smudges, obliterations, or fax/copier marks (for example, speckles or dots in a substantial portion of the drawing). FIG(s)
- [ ] Figure numbers are duplicated or missing. FIG(s)
- [ ] Drawing sheet or figure is missing. FIG(s)
- [ ] Numbers, letters, or reference characters in the drawing have been crossed out or are illegibly handwritten. FIG(s)
- [ ] The character of the lines, numbers, and letters is poor. FIG(s)
- [ ] The drawing's background shows that the original drawing was made on graph paper or other paper with a pattern or decoration. FIG(s)
- [ ] The FIG. number label is placed in a location that causes the drawing to be read upside down. FIG(s)
- [X] Data, a reference number, or part of the drawing is truncated or missing, or a lead line has no reference number. FIG(s) 6
- [ ] The drawing and/or the FIG. label contain(s) foreign language. FIG(s)
- [ ] This utility application contains a photograph of a view that is capable of being illustrated as a line drawing. FIG(s)
- [ ] A petition under 37 CFR 1.84(a)(2) to accept color drawings has been granted, but the brief description of the drawings in the specification does not contain (or has not been amended to contain) the paragraph required by 37 CFR 1.84(a)(2)(iii).
- [ ] This reissue application contains added and/or amended drawings that are not labeled as “New” or “Amended” or “Canceled” as required by 37 CFR 1.173(b)(3). FIG(s)
- [ ] This Design reissue application contains a drawing that is labeled as “Canceled” but is not surrounded by brackets, or a drawing that is surrounded by brackets but is not labeled as “Canceled.” See 37 CFR 1.173(b)(3). FIG(s)
- [ ] OTHER:
- [ ] COMMENTS:

UNITED STATES PATENT AND TRADEMARK OFFICE
COMMISSIONER FOR PATENTS
P.O.BOX 1450
ALEXANDRIA VA 22313-1451

PRESORTED
FIRST-CLASS MAIL
U.S. POSTAGE PAID
POSTEDIGITAL
NNNNN

BALLARD SPAHR LLP
SUITE 1600
999 PEACHTREE STREET
ATLANTA, GA 30309-4421

Courtesy Reminder for
Application Serial No: 17/082,877

Attorney Docket No: 36362.0150U5
Customer Number: 23859
Date of Electronic Notification: 05/12/2022

This is a courtesy reminder that new correspondence is available for this application. If you have not done so already, please review the correspondence. The official date of notification of the outgoing correspondence will be indicated on the form PTOL-90 accompanying the correspondence.

An email notification regarding the correspondence was sent to the following email address(es) associated with your customer number:
USpatentmail@ballardspahr.com

To view your correspondence online or update your email addresses, please visit us anytime at **https://ppair-my.uspto.gov/pair/PrivatePair.**
If you have any questions, please email the Electronic Business Center (EBC) at EBC@uspto.gov or call 1-866-217-9197.

UNITED STATES PATENT AND TRADEMARK OFFICE

UNITED STATES DEPARTMENT OF COMMERCE
United States Patent and Trademark Office
Address: COMMISSIONER FOR PATENTS
P.O. Box 1450
Alexandria, Virginia 22313-1450
www.uspto.gov

NOTICE OF ALLOWANCE AND FEE(S) DUE

23859 7590 05/12/2022
BALLARD SPAHR LLP
SUITE 1600
999 PEACHTREE STREET
ATLANTA, GA 30309-4421

EXAMINER
WILLS III, MICHAEL R

ART UNIT	PAPER NUMBER
3676	

DATE MAILED: 05/12/2022

APPLICATION NO.	FILING DATE	FIRST NAMED INVENTOR	ATTORNEY DOCKET NO.	CONFIRMATION NO.
17/082,877	10/28/2020	CHRISTOPHER L. DRENTH	36362.0150U5	1013

TITLE OF INVENTION: CORE BARREL HEAD ASSEMBLY WITH AN INTEGRATED SAMPLE ORIENTATION TOOL AND SYSTEM FOR USING SAME

APPLN. TYPE	ENTITY STATUS	ISSUE FEE DUE	PUBLICATION FEE DUE	PREV. PAID ISSUE FEE	TOTAL FEE(S) DUE	DATE DUE
nonprovisional	UNDISCOUNTED	$1200	$0.00	$0.00	$1200	08/12/2022

THE APPLICATION IDENTIFIED ABOVE HAS BEEN EXAMINED AND IS ALLOWED FOR ISSUANCE AS A PATENT. PROSECUTION ON THE MERITS IS CLOSED. THIS NOTICE OF ALLOWANCE IS NOT A GRANT OF PATENT RIGHTS. THIS APPLICATION IS SUBJECT TO WITHDRAWAL FROM ISSUE AT THE INITIATIVE OF THE OFFICE OR UPON PETITION BY THE APPLICANT. SEE 37 CFR 1.313 AND MPEP 1308.

THE ISSUE FEE AND PUBLICATION FEE (IF REQUIRED) MUST BE PAID WITHIN THREE MONTHS FROM THE MAILING DATE OF THIS NOTICE OR THIS APPLICATION SHALL BE REGARDED AS ABANDONED. THIS STATUTORY PERIOD CANNOT BE EXTENDED. SEE 35 U.S.C. 151. THE ISSUE FEE DUE INDICATED ABOVE DOES NOT REFLECT A CREDIT FOR ANY PREVIOUSLY PAID ISSUE FEE IN THIS APPLICATION. IF AN ISSUE FEE HAS PREVIOUSLY BEEN PAID IN THIS APPLICATION (AS SHOWN ABOVE), THE RETURN OF PART B OF THIS FORM WILL BE CONSIDERED A REQUEST TO REAPPLY THE PREVIOUSLY PAID ISSUE FEE TOWARD THE ISSUE FEE NOW DUE.

HOW TO REPLY TO THIS NOTICE:

I. Review the ENTITY STATUS shown above. If the ENTITY STATUS is shown as SMALL or MICRO, verify whether entitlement to that entity status still applies.

If the ENTITY STATUS is the same as shown above, pay the TOTAL FEE(S) DUE shown above.

If the ENTITY STATUS is changed from that shown above, on PART B - FEE(S) TRANSMITTAL, complete section number 5 titled "Change in Entity Status (from status indicated above)".

For purposes of this notice, small entity fees are 1/2 the amount of undiscounted fees, and micro entity fees are 1/2 the amount of small entity fees.

II. PART B - FEE(S) TRANSMITTAL, or its equivalent, must be completed and returned to the United States Patent and Trademark Office (USPTO) with your ISSUE FEE and PUBLICATION FEE (if required). If you are charging the fee(s) to your deposit account, section "4b" of Part B - Fee(s) Transmittal should be completed. If an equivalent of Part B is filed, a request to reapply a previously paid issue fee must be clearly made, and delays in processing may occur due to the difficulty in recognizing the paper as an equivalent of Part B.

III. All communications regarding this application must give the application number. Please direct all communications prior to issuance to Mail Stop ISSUE FEE unless advised to the contrary.

IMPORTANT REMINDER: Maintenance fees are due in utility patents issuing on applications filed on or after Dec. 12, 1980. It is patentee's responsibility to ensure timely payment of maintenance fees when due. More information is available at www.uspto.gov/PatentMaintenanceFees.

PART B - FEE(S) TRANSMITTAL

Complete and send this form, together with applicable fee(s), by mail or fax, or via EFS-Web.

By mail, send to: Mail Stop ISSUE FEE
Commissioner for Patents
P.O. Box 1450
Alexandria, Virginia 22313-1450

By fax, send to: (571)-273-2885

INSTRUCTIONS: This form should be used for transmitting the ISSUE FEE and PUBLICATION FEE (if required). Blocks 1 through 5 should be completed where appropriate. All further correspondence including the Patent, advance orders and notification of maintenance fees will be mailed to the current correspondence address as indicated unless corrected below or directed otherwise in Block 1, by (a) specifying a new correspondence address; and/or (b) indicating a separate "FEE ADDRESS" for maintenance fee notifications.

CURRENT CORRESPONDENCE ADDRESS (Note: Use Block 1 for any change of address)

23859 7590 05/12/2022
BALLARD SPAHR LLP
SUITE 1600
999 PEACHTREE STREET
ATLANTA, GA 30309-4421

Note: A certificate of mailing can only be used for domestic mailings of the Fee(s) Transmittal. This certificate cannot be used for any other accompanying papers. Each additional paper, such as an assignment or formal drawing, must have its own certificate of mailing or transmission.

Certificate of Mailing or Transmission

I hereby certify that this Fee(s) Transmittal is being deposited with the United States Postal Service with sufficient postage for first class mail in an envelope addressed to the Mail Stop ISSUE FEE address above, or being transmitted to the USPTO via EFS-Web or by facsimile to (571) 273-2885, on the date below.

(Typed or printed name)

(Signature)

(Date)

APPLICATION NO.	FILING DATE	FIRST NAMED INVENTOR	ATTORNEY DOCKET NO.	CONFIRMATION NO.
17/082,877	10/28/2020	CHRISTOPHER L. DRENTH	36362.0150U5	1013

TITLE OF INVENTION: CORE BARREL HEAD ASSEMBLY WITH AN INTEGRATED SAMPLE ORIENTATION TOOL AND SYSTEM FOR USING SAME

APPLN. TYPE	ENTITY STATUS	ISSUE FEE DUE	PUBLICATION FEE DUE	PREV. PAID ISSUE FEE	TOTAL FEE(S) DUE	DATE DUE
nonprovisional	UNDISCOUNTED	$1200	$0.00	$0.00	$1200	08/12/2022

EXAMINER	ART UNIT	CLASS-SUBCLASS
WILLS III, MICHAEL R	3676	175-044000

1. Change of correspondence address or indication of "Fee Address" (37 CFR 1.363).

❑ Change of correspondence address (or Change of Correspondence Address form PTO/AIA/122 or PTO/SB/122) attached.

❑ "Fee Address" indication (or "Fee Address" Indication form PTO/AIA/47 or PTO/SB/47; Rev 03-02 or more recent) attached. **Use of a Customer Number is required.**

2. For printing on the patent front page, list
(1) The names of up to 3 registered patent attorneys or agents OR, alternatively,
(2) The name of a single firm (having as a member a registered attorney or agent) and the names of up to 2 registered patent attorneys or agents. If no name is listed, no name will be printed.

1_____
2_____
3_____

3. ASSIGNEE NAME AND RESIDENCE DATA TO BE PRINTED ON THE PATENT (print or type)

PLEASE NOTE: Unless an assignee is identified below, no assignee data will appear on the patent. If an assignee is identified below, the document must have been previously recorded, or filed for recordation, as set forth in 37 CFR 3.11 and 37 CFR 3.81(a). Completion of this form is NOT a substitute for filing an assignment.

(A) NAME OF ASSIGNEE (B) RESIDENCE: (CITY and STATE OR COUNTRY)

Please check the appropriate assignee category or categories (will not be printed on the patent) : ❑ Individual ❑ Corporation or other private group entity ❑ Government

4a. Fees submitted: ❑Issue Fee ❑Publication Fee (if required) ❑Advance Order - # of Copies _____

4b. Method of Payment: *(Please first reapply any previously paid fee shown above)*

❑ Electronic Payment via EFS-Web ❑ Enclosed check ❑ Non-electronic payment by credit card (Attach form PTO-2038)

❑ The Director is hereby authorized to charge the required fee(s), any deficiency, or credit any overpayment to Deposit Account No. _____

5. **Change in Entity Status** (from status indicated above)

❑ Applicant certifying micro entity status. See 37 CFR 1.29

❑ Applicant asserting small entity status. See 37 CFR 1.27

❑ Applicant changing to regular undiscounted fee status.

NOTE: Absent a valid certification of Micro Entity Status (see forms PTO/SB/15A and 15B), issue fee payment in the micro entity amount will not be accepted at the risk of application abandonment.
NOTE: If the application was previously under micro entity status, checking this box will be taken to be a notification of loss of entitlement to micro entity status.
NOTE: Checking this box will be taken to be a notification of loss of entitlement to small or micro entity status, as applicable.

NOTE: This form must be signed in accordance with 37 CFR 1.31 and 1.33. See 37 CFR 1.4 for signature requirements and certifications.

Authorized Signature _____ Date _____

Typed or printed name _____ Registration No. _____

UNITED STATES DEPARTMENT OF COMMERCE
United States Patent and Trademark Office
Address: COMMISSIONER FOR PATENTS
P.O. Box 1450
Alexandria, Virginia 22313-1450
www.uspto.gov

APPLICATION NO.	FILING DATE	FIRST NAMED INVENTOR	ATTORNEY DOCKET NO.	CONFIRMATION NO.
17/082,877	10/28/2020	CHRISTOPHER L. DRENTH	36362.0150U5	1013

23859 7590 05/12/2022
BALLARD SPAHR LLP
SUITE 1600
999 PEACHTREE STREET
ATLANTA, GA 30309-4421

EXAMINER
WILLS III, MICHAEL R

ART UNIT	PAPER NUMBER
3676	

DATE MAILED: 05/12/2022

Determination of Patent Term Adjustment under 35 U.S.C. 154 (b)
(Applications filed on or after May 29, 2000)

The Office has discontinued providing a Patent Term Adjustment (PTA) calculation with the Notice of Allowance.

Section 1(h)(2) of the AIA Technical Corrections Act amended 35 U.S.C. 154(b)(3)(B)(i) to eliminate the requirement that the Office provide a patent term adjustment determination with the notice of allowance. See Revisions to Patent Term Adjustment, 78 Fed. Reg. 19416, 19417 (Apr. 1, 2013). Therefore, the Office is no longer providing an initial patent term adjustment determination with the notice of allowance. The Office will continue to provide a patent term adjustment determination with the Issue Notification Letter that is mailed to applicant approximately three weeks prior to the issue date of the patent, and will include the patent term adjustment on the patent. Any request for reconsideration of the patent term adjustment determination (or reinstatement of patent term adjustment) should follow the process outlined in 37 CFR 1.705.

Any questions regarding the Patent Term Extension or Adjustment determination should be directed to the Office of Patent Legal Administration at (571)-272-7702. Questions relating to issue and publication fee payments should be directed to the Customer Service Center of the Office of Patent Publication at 1-(888)-786-0101 or (571)-272-4200.

OMB Clearance and PRA Burden Statement for PTOL-85 Part B

The Paperwork Reduction Act (PRA) of 1995 requires Federal agencies to obtain Office of Management and Budget approval before requesting most types of information from the public. When OMB approves an agency request to collect information from the public, OMB (i) provides a valid OMB Control Number and expiration date for the agency to display on the instrument that will be used to collect the information and (ii) requires the agency to inform the public about the OMB Control Number's legal significance in accordance with 5 CFR 1320.5(b).

The information collected by PTOL-85 Part B is required by 37 CFR 1.311. The information is required to obtain or retain a benefit by the public which is to file (and by the USPTO to process) an application. Confidentiality is governed by 35 U.S.C. 122 and 37 CFR 1.14. This collection is estimated to take 30 minutes to complete, including gathering, preparing, and submitting the completed application form to the USPTO. Time will vary depending upon the individual case. Any comments on the amount of time you require to complete this form and/or suggestions for reducing this burden, should be sent to the Chief Information Officer, U.S. Patent and Trademark Office, U.S. Department of Commerce, P.O. Box 1450, Alexandria, Virginia 22313-1450. DO NOT SEND FEES OR COMPLETED FORMS TO THIS ADDRESS. SEND TO: Commissioner for Patents, P.O. Box 1450, Alexandria, Virginia 22313-1450. Under the Paperwork Reduction Act of 1995, no persons are required to respond to a collection of information unless it displays a valid OMB control number.

Privacy Act Statement

The Privacy Act of 1974 (P.L. 93-579) requires that you be given certain information in connection with your submission of the attached form related to a patent application or patent. Accordingly, pursuant to the requirements of the Act, please be advised that: (1) the general authority for the collection of this information is 35 U.S.C. 2(b)(2); (2) furnishing of the information solicited is voluntary; and (3) the principal purpose for which the information is used by the U.S. Patent and Trademark Office is to process and/or examine your submission related to a patent application or patent. If you do not furnish the requested information, the U.S. Patent and Trademark Office may not be able to process and/or examine your submission, which may result in termination of proceedings or abandonment of the application or expiration of the patent.

The information provided by you in this form will be subject to the following routine uses:

1. The information on this form will be treated confidentially to the extent allowed under the Freedom of Information Act (5 U.S.C. 552) and the Privacy Act (5 U.S.C 552a). Records from this system of records may be disclosed to the Department of Justice to determine whether disclosure of these records is required by the Freedom of Information Act.
2. A record from this system of records may be disclosed, as a routine use, in the course of presenting evidence to a court, magistrate, or administrative tribunal, including disclosures to opposing counsel in the course of settlement negotiations.
3. A record in this system of records may be disclosed, as a routine use, to a Member of Congress submitting a request involving an individual, to whom the record pertains, when the individual has requested assistance from the Member with respect to the subject matter of the record.
4. A record in this system of records may be disclosed, as a routine use, to a contractor of the Agency having need for the information in order to perform a contract. Recipients of information shall be required to comply with the requirements of the Privacy Act of 1974, as amended, pursuant to 5 U.S.C. 552a(m).
5. A record related to an International Application filed under the Patent Cooperation Treaty in this system of records may be disclosed, as a routine use, to the International Bureau of the World Intellectual Property Organization, pursuant to the Patent Cooperation Treaty.
6. A record in this system of records may be disclosed, as a routine use, to another federal agency for purposes of National Security review (35 U.S.C. 181) and for review pursuant to the Atomic Energy Act (42 U.S.C. 218(c)).
7. A record from this system of records may be disclosed, as a routine use, to the Administrator, General Services, or his/her designee, during an inspection of records conducted by GSA as part of that agency's responsibility to recommend improvements in records management practices and programs, under authority of 44 U.S.C. 2904 and 2906. Such disclosure shall be made in accordance with the GSA regulations governing inspection of records for this purpose, and any other relevant (i.e., GSA or Commerce) directive. Such disclosure shall not be used to make determinations about individuals.
8. A record from this system of records may be disclosed, as a routine use, to the public after either publication of the application pursuant to 35 U.S.C. 122(b) or issuance of a patent pursuant to 35 U.S.C. 151. Further, a record may be disclosed, subject to the limitations of 37 CFR 1.14, as a routine use, to the public if the record was filed in an application which became abandoned or in which the proceedings were terminated and which application is referenced by either a published application, an application open to public inspection or an issued patent.
9. A record from this system of records may be disclosed, as a routine use, to a Federal, State, or local law enforcement agency, if the USPTO becomes aware of a violation or potential violation of law or regulation.

Notice of Allowability	Application No. 17/082,877	Applicant(s) DRENTH et al.	
	Examiner MICHAEL R WILLS III	Art Unit 3676	AIA (FITF) Status Yes

-- The MAILING DATE of this communication appears on the cover sheet with the correspondence address--

All claims being allowable, PROSECUTION ON THE MERITS IS (OR REMAINS) CLOSED in this application. If not included herewith (or previously mailed), a Notice of Allowance (PTOL-85) or other appropriate communication will be mailed in due course. **THIS NOTICE OF ALLOWABILITY IS NOT A GRANT OF PATENT RIGHTS.** This application is subject to withdrawal from issue at the initiative of the Office or upon petition by the applicant. See 37 CFR 1.313 and MPEP 1308.

1. ☑ This communication is responsive to the remarks filed April 27, 2022.
   ☐ A declaration(s)/affidavit(s) under **37 CFR 1.130(b)** was/were filed on _____.

2. ☐ An election was made by the applicant in response to a restriction requirement set forth during the interview on _____; the restriction requirement and election have been incorporated into this action.

3. ☑ The allowed claim(s) is/are 1-20 . As a result of the allowed claim(s), you may be eligible to benefit from the **Patent Prosecution Highway** program at a participating intellectual property office for the corresponding application. For more information, please see **http://www.uspto.gov/patents/init_events/pph/index.jsp** or send an inquiry to **PPHfeedback@uspto.gov.**

4. ☐ Acknowledgment is made of a claim for foreign priority under 35 U.S.C. § 119(a)-(d) or (f).

   Certified copies:

   a) ☐ All b) ☐ Some* c) ☐ None of the:

   1. ☐ Certified copies of the priority documents have been received.
   2. ☐ Certified copies of the priority documents have been received in Application No. _____ .
   3. ☐ Copies of the certified copies of the priority documents have been received in this national stage application from the International Bureau (PCT Rule 17.2(a)).

   * Certified copies not received: _____ .

Applicant has THREE MONTHS FROM THE "MAILING DATE" of this communication to file a reply complying with the requirements noted below. Failure to timely comply will result in ABANDONMENT of this application.
THIS THREE-MONTH PERIOD IS NOT EXTENDABLE.

5. ☐ CORRECTED DRAWINGS (as "replacement sheets") must be submitted.
   ☐ including changes required by the attached Examiner's Amendment / Comment or in the Office action of Paper No./Mail Date _____ .

   Identifying indicia such as the application number (see 37 CFR 1.84(c)) should be written on the drawings in the front (not the back) of each sheet. Replacement sheet(s) should be labeled as such in the header according to 37 CFR 1.121(d).

6. ☐ DEPOSIT OF and/or INFORMATION about the deposit of BIOLOGICAL MATERIAL must be submitted. Note the attached Examiner's comment regarding REQUIREMENT FOR THE DEPOSIT OF BIOLOGICAL MATERIAL.

Attachment(s)

1. ☐ Notice of References Cited (PTO-892)
2. ☑ Information Disclosure Statements (PTO/SB/08), Paper No./Mail Date _____.
3. ☐ Examiner's Comment Regarding Requirement for Deposit of Biological Material _____.
4. ☐ Interview Summary (PTO-413), Paper No./Mail Date. _____.
5. ☐ Examiner's Amendment/Comment
6. ☑ Examiner's Statement of Reasons for Allowance
7. ☐ Other _____.

/MICHAEL R WILLS III/
Primary Examiner, Art Unit 3676

DETAILED ACTION

Allowable Subject Matter

1. The following is an examiner's statement of reasons for allowance: Applicant is claiming a core barrel head assembly having at least one electronic instrument that is configured to obtain orientation data. The core barrel head assembly has a first interior cavity and a sealed interior cavity spaced distally from the first interior cavity and having a closed proximal end. The core barrel head assembly has a threaded proximal end portion and a threaded distal end portion. A seal coupler that is received in the opening of the threaded distal end portion. A window that extends from the exterior surface into optical communication with the sealed interior cavity. At least one electronic instrument that is configured to obtain core orientation data and the at least one electronic instrument comprises at least one digital and/or electro- mechanical sensor in a core orientation data recording tool. A check valve assembly to drive the seal coupler into a sealed position within the opening of the threaded distal end portion. Examiner did not find prior art that taught all of the elements and limitations disclosed in the independent claim.

Any comments considered necessary by applicant must be submitted no later than the payment of the issue fee and, to avoid processing delays, should preferably accompany the issue fee. Such submissions should be clearly labeled "Comments on Statement of Reasons for Allowance."

Conclusion

2. Any inquiry concerning this communication or earlier communications from the examiner should be directed to MICHAEL R WILLS III whose telephone number is (571)272-5521. The examiner can normally be reached Monday-Friday 8:30am to 5:00pm.

Examiner interviews are available via telephone, in-person, and video conferencing using a USPTO supplied web-based collaboration tool. To schedule an interview, applicant is encouraged to use the USPTO Automated Interview Request (AIR) at http://www.uspto.gov/interviewpractice.

If attempts to reach the examiner by telephone are unsuccessful, the examiner's supervisor, Robert Fuller can be reached on 5712706300. The fax phone number for the organization where this application or proceeding is assigned is 571-273-8300.

Information regarding the status of published or unpublished applications may be obtained from Patent Center. Unpublished application information in Patent Center is available to registered users. To file and manage patent submissions in Patent Center, visit: https://patentcenter.uspto.gov. Visit https://www.uspto.gov/patents/apply/patent-center for more information about Patent Center and https://www.uspto.gov/patents/docx for information about filing in DOCX format. For additional questions, contact the Electronic Business Center (EBC) at 866-217-9197 (toll-free). If you would like assistance from a USPTO Customer Service Representative, call 800-786-9199 (IN USA OR CANADA) or 571-272-1000.

/MICHAEL R WILLS III/
Primary Examiner, Art Unit 3676

Issue Classification	Application/Control No.	Applicant(s)/Patent Under Reexamination
	17/082,877	DRENTH et al.
	Examiner	**Art Unit**
	MICHAEL R WILLS III	3676

CPC						
Symbol					**Type**	**Version**
E21B	/	25	/	16	F	2013-01-01

CPC Combination Sets								
Symbol					**Type**	**Set**	**Ranking**	**Version**
	/		/					

NONE (Assistant Examiner)	(Date)	**Total Claims Allowed:** 20	
/MICHAEL R WILLS III/ Primary Examiner, Art Unit 3676 (Primary Examiner)	07 May 2022 (Date)	O.G. Print Claim(s) 1	O.G. Print Figure 8

U.S. Patent and Trademark Office

Part of Paper No.: 20220507

Issue Classification	Application/Control No.	Applicant(s)/Patent Under Reexamination
	17/082,877	DRENTH et al.
	Examiner	**Art Unit**
	MICHAEL R WILLS III	3676

INTERNATIONAL CLASSIFICATION				
CLAIMED				
E21B	/	25	/	16

NON-CLAIMED				
	/		/	

US ORIGINAL CLASSIFICATION	
CLASS	**SUBCLASS**

CROSS REFERENCES(S)						
CLASS	**SUBCLASS (ONE SUBCLASS PER BLOCK)**					

NONE (Assistant Examiner)	(Date)	**Total Claims Allowed:** 20	
/MICHAEL R WILLS III/ Primary Examiner, Art Unit 3676 (Primary Examiner)	07 May 2022 (Date)	O.G. Print Claim(s) 1	O.G. Print Figure 8

U.S. Patent and Trademark Office

Part of Paper No.: 20220507

Issue Classification	Application/Control No.	Applicant(s)/Patent Under Reexamination
	17/082,877	DRENTH et al.
	Examiner	**Art Unit**
	MICHAEL R WILLS III	3676

☐ Claims renumbered in the same order as presented by applicant ☐ CPA ☑ T.D. ☐ R.1.47

CLAIMS

Final	Original	Final	Original	Final	Original	Final	Original	Final	Original	Final	Original	Final	Original	Final	Original
1	1	12	10	10	19										
2	2	13	11	20	20										
3	3	14	12												
4	4	15	13												
5	5	16	14												
6	6	17	15												
7	7	18	16												
8	8	19	17												
11	9	9	18												

NONE (Assistant Examiner)	(Date)	**Total Claims Allowed:** 20	
/MICHAEL R WILLS III/ Primary Examiner, Art Unit 3676 (Primary Examiner)	07 May 2022 (Date)	O.G. Print Claim(s) 1	O.G. Print Figure 8

U.S. Patent and Trademark Office

Part of Paper No.: 20220507

Search Notes	Application/Control No.	Applicant(s)/Patent Under Reexamination
	17/082,877	DRENTH et al.
	Examiner	**Art Unit**
	MICHAEL R WILLS III	3676

CPC - Searched*		
Symbol	**Date**	**Examiner**
E21B25/16	10/22/2021	MW

CPC Combination Sets - Searched*		
Symbol	**Date**	**Examiner**

US Classification - Searched*			
Class	**Subclass**	**Date**	**Examiner**

* See search history printout included with this form or the SEARCH NOTES box below to determine the scope of the search.

Search Notes		
Search Notes	**Date**	**Examiner**
See East Search History	10/22/2021	MW
Forward/Backward Search	10/22/2021	MW
Inventor Name Search	10/22/2021	MW
Updated Search	05/07/2022	MW

Interference Search			
US Class/CPC Symbol	**US Subclass/CPC Group**	**Date**	**Examiner**
	See East Search History	05/07/2022	MW

Bibliographic Data

Application No: 17/082,877

Foreign Priority claimed: ○ Yes ◉ No

35 USC 119 (a-d) conditions met: ☐ Yes ☑ No | ☐ Met After Allowance

Verified and Acknowledged: /MICHAEL R WILLS III/ | Examiner's Signature | Initials

Title: CORE BARREL HEAD ASSEMBLY WITH AN INTEGRATED SAMPLE ORIENTATION TOOL AND SYSTEM FOR USING SAME

FILING or 371(c) DATE	CLASS	GROUP ART UNIT	ATTORNEY DOCKET NO.
10/28/2020	175	3676	36362.0150U5
RULE			

APPLICANTS

LONGYEAR TM, INC., Salt Lake City, UT,

GLOBALTECH CORPORATION PTY LTD, CANNING VALE, WA,

INVENTORS

CHRISTOPHER L. DRENTH, Burlington, CANADA

Gordon Stewart, Claremont, AUSTRALIA

Khaled Hejleh, Peppermint Grove, AUSTRALIA

CONTINUING DATA

This application is a CON of 16588026 09/30/2019 PAT 10830013

16588026 is a CON of 16017334 06/25/2018 PAT 10465463

16017334 is a CON of 14692484 04/21/2015 PAT 10047581

14692484 has PRO of 61982052 04/21/2014

FOREIGN APPLICATIONS

IF REQUIRED, FOREIGN LICENSE GRANTED**

11/24/2020

STATE OR COUNTRY

CANADA

ADDRESS

BALLARD SPAHR LLP
SUITE 1600
999 PEACHTREE STREET
ATLANTA, GA 30309-4421
UNITED STATES

FILING FEE RECEIVED

$1,820

PTO/SB/08a (07-09)
Approved for use through 11/30/2020. OMB 0651-0031
U.S. Patent and Trademark Office; U.S. DEPARTMENT OF COMMERCE
Under the Paperwork Reduction Act of 1995, no persons are required to respond to a collection of information unless it contains a valid OMB control number.

Substitute for form 1449/PTO

INFORMATION DISCLOSURE STATEMENT BY APPLICANT

(Use as many sheets as necessary)

Sheet	1	of	2

Complete if Known	
Application Number	17/082,877
Filing Date	October 28, 2020
First Named Inventor	Christopher L. Drenth
Art Unit	3676
Examiner Name	Not Yet Assigned
Attorney Docket Number	36362.0150U5

U. S. PATENT DOCUMENTS

Examiner Initials*	Cite No.[1]	Document Number Number-Kind Code[2] *(if known)*	Publication Date MM-DD-YYYY	Name of Patentee or Applicant of Cited Document	Pages, Columns, Lines, Where Relevant Passages or Relevant Figures Appear
	A	7,703,507	4-27-2010	Strickland	
	B	7,777,643	08-17-2010	Sun et al.	
	C	2012/0273272	11-01-2012	Borg	

FOREIGN PATENT DOCUMENTS

Examiner Initials*	Cite No.[1]	Foreign Patent Document Country Code[3] Number[4] Kind Code[5] *(if known)*	Publication Date MM-DD-YYYY	Name of Patentee or Applicant of Cited Document	Pages, Columns, Lines, Where Relevant Passages Or Relevant Figures Appear	T[6]
	A	WO2010091471A1	02-12-2010	Jacobs		
	B	WO2012012839A1	07-30-2010	Klass		
	C	AU 2009100636;	08-13-2009	Kleyn		
	D	CA 2456506	01-03-2005	Scott		

Examiner Signature		Date Considered	

*EXAMINER: Initial if reference considered, whether or not citation is in conformance with MPEP 609. Draw line through citation if not in conformance and not considered. Include copy of this form with next communication to applicant. [1] Applicant's unique citation designation number (optional). [2] See Kinds Codes of USPTO Patent Documents at www.uspto.gov or MPEP 901.04. [3] Enter Office that issued the document, by the two-letter code (WIPO Standard ST.3). [4] For Japanese patent documents, the indication of the year of the reign of the Emperor must precede the serial number of the patent document. [5] Kind of document by the appropriate symbols as indicated on the document under WIPO Standard ST.16 if possible. [6] Applicant is to place a check mark here if English language Translation is attached.

I hereby certify that this paper (along with any paper referred to as being attached or enclosed) is being transmitted via the Office electronic filing system in accordance with 37 C.F.R. § 1.6(a)(4).

Dated: April 18, 2022 Electronic Signature: /Benjamin D. Kirk/ (Benjamin D. Kirk)

ALL REFERENCES CONSIDERED EXCEPT WHERE LINED THROUGH. /M.R.W/

PTO/SB/08b (07-09)
Approved for use through 11/30/2020. OMB 0651-0031
U.S. Patent and Trademark Office; U.S. DEPARTMENT OF COMMERCE
Under the Paperwork Reduction Act of 1995, no persons are required to respond to a collection of information unless it contains a valid OMB control number.

Substitute for form 1449/PTO

INFORMATION DISCLOSURE STATEMENT BY APPLICANT

(Use as many sheets as necessary)

Sheet	2	of	2

Complete if Known	
Application Number	17/082,877
Filing Date	October 28, 2020
First Named Inventor	Christopher L. Drenth
Art Unit	3676
Examiner Name	Not Yet Assigned
Attorney Docket Number	36362.0150U5

NON PATENT LITERATURE DOCUMENTS

Examiner Initials*	Cite No.[1]	Include name of the author (in CAPITAL LETTERS), title of the article (when appropriate), title of the item (book, magazine, journal, serial, symposium, catalog, etc.), date, page(s), volume-issue number(s), publisher, city and/or country where published.	T[2]
	A	Reflex EZ-TRAC Manual, published January 2009	
	B	Confirmation of Filing of Evidence in support of Opposition of Australian Patent No. 20190257536, by Imdex,Limited dated December 24, 2021	
	C	Declaration (First) of opposition of Australian Patent No. 20190257536 by Chris Brown, dated December 3, 2021	
	D	Declaration (Second) of opposition of Australian Patent No. 20190257536 by Chris Brown, dated December 22, 2021	
	E	Declaration of opposition of Australian Patent No. 20190257536 by James Barry Reilly, dated December 12, 2021	

Examiner Signature	/MICHAEL R WILLS III/	Date Considered	05/07/2022

*EXAMINER: Initial if reference considered, whether or not citation is in conformance with MPEP 609. Draw line through citation if not in conformance and not considered. Include copy of this form with next communication to applicant.

[1] Applicant's unique citation designation number (optional). [2] Applicant is to place a check mark here if English language Translation is attached.

ALL REFERENCES CONSIDERED EXCEPT WHERE LINED THROUGH. /M.R.W/

PE2E SEARCH - Search History (Prior Art)

Ref #	Hits	Search Query	DBs	Default Operator	Plurals	British Equivalents	Time Stamp
L1	34	"4955438"	(US-PGPUB; USPAT)	OR	ON	ON	2021/10/22 03:32 PM
L2	7	(US-0300162-$ | US-0305995-$ | US-15782230-$ | US-2008108-$ | US-4955498-$ | US-7296698-$ | US-20150300162-$ | US-20180305995-$).DID.	(US-PGPUB; USPAT)	OR	ON	ON	2021/10/22 03:34 PM
L3	3	(US-0422015-$ | US-04282015-$ | US-10047581-$ | US-10465463-$ | US-14692484-$ | US-58636201-$).DID.	(US-PGPUB; USPAT)	OR	ON	ON	2021/10/22 03:36 PM
L4	338	((("DRENTH") near3 ("CHRISTOPHER")) OR (("STEWART") near3 ("Gordon")) OR (("HEJLEH") near3 ("Khaled"))).INV.	(US-PGPUB; USPAT; USOCR; EPO; JPO; DERWENT)	OR	ON	ON	2021/10/22 03:36 PM
L5	349	(E21B25/16).cpc.	(US-PGPUB; USPAT; USOCR; EPO; JPO; DERWENT)	OR	ON	ON	2021/10/22 03:42 PM
L6	5273775	L5 AND check valve	(US-PGPUB; USPAT; USOCR; EPO; JPO; DERWENT)	OR	ON	ON	2021/10/22 03:42 PM
L7	29	L5 AND check valve	(US-PGPUB; USPAT; USOCR; EPO; JPO; DERWENT)	ADJ	ON	ON	2021/10/22 03:42 PM
L8	11	"10047581"	(US-PGPUB; USPAT; USOCR)	ADJ	ON	ON	2022/05/07 09:51 AM
L9	1	"14692484"	(US-PGPUB; USPAT; USOCR)	ADJ	ON	ON	2017/06/16 07:57 AM
L10	79	(("DRENTH") near3 ("CHRISTOPHER")).INV.	(US-PGPUB; USPAT; USOCR)	ADJ	ON	ON	2017/08/10 12:08 PM
L11	145	(("STEWART") near3 ("GORDON")).INV.	(US-PGPUB; USPAT; USOCR)	ADJ	ON	ON	2017/08/10 12:21 PM
L12	47	(("STEWART") near3 ("GORDON")).INV.	(EPO; JPO; DERWENT)	ADJ	ON	ON	2017/08/10 12:21 PM
L13	7	(("HEJLEH") near3 ("KHALED")).INV.	(US-PGPUB; USPAT; USOCR)	ADJ	ON	ON	2017/08/10 02:08 PM
L14	2	("20120145461"|"6732818").PN.	(US-PGPUB; USPAT; USOCR)	ADJ	ON	ON	2017/08/10 03:04 PM
L15	201	(E21B25/16).cpc.	(US-PGPUB; USPAT; USOCR)	ADJ	ON	ON	2017/08/10 03:07 PM

L16	440855	(power source or battery) and (body or housing)and (instrument or sensor)	(US-PGPUB; USPAT; USOCR)	ADJ	ON	ON	2017/08/10 04:21 PM
L17	0	WO "2008113127"	(US-PGPUB; USPAT; USOCR)	ADJ	ON	ON	2017/08/11 10:41 AM
L18	3	"2008113127"	(US-PGPUB; USPAT; USOCR; DERWENT)	ADJ	ON	ON	2017/08/11 10:41 AM
L19	201	(E21B25/16).cpc.	(US-PGPUB; USPAT; USOCR)	ADJ	ON	ON	2017/08/11 11:12 AM
L20	48	L19 and (battery or power source)	(US-PGPUB; USPAT; USOCR)	ADJ	ON	ON	2017/08/11 11:12 AM
L21	3	(US-20150300162-$ or US-20150136488-$ or US-20150029035-$).did.	(US-PGPUB)	ADJ	ON	ON	2017/08/11 11:15 AM
L22	3	L21 and (battery or power source)	(US-PGPUB; USPAT; USOCR)	ADJ	ON	ON	2017/08/11 11:15 AM
L23	3	L21 and (battery or power source or power supply)	(US-PGPUB; USPAT; USOCR)	ADJ	ON	ON	2017/08/11 11:19 AM
L24	48	L19 and (battery or power source or power supply)	(US-PGPUB; USPAT; USOCR)	ADJ	ON	ON	2017/08/11 11:19 AM
L25	21	L19 and window	(US-PGPUB; USPAT; USOCR)	ADJ	ON	ON	2017/08/11 11:45 AM
L26	0	702/2.cpc.	(US-PGPUB; USPAT; USOCR)	ADJ	ON	ON	2017/08/11 11:46 AM
L27	921	702/2.ccls.	(US-PGPUB; USPAT; USOCR)	ADJ	ON	ON	2017/08/11 11:46 AM
L28	236	L27 and window	(US-PGPUB; USPAT; USOCR)	ADJ	ON	ON	2017/08/11 11:46 AM
L29	8	L27 and window and core$3 and orientat$3	(US-PGPUB; USPAT; USOCR)	ADJ	ON	ON	2017/08/11 11:47 AM
L30	606	E21B$.cpc.and window and core$3 and orientat$3 and (battery or power source or power supply)	(US-PGPUB; USPAT; USOCR)	ADJ	ON	ON	2017/08/11 11:48 AM
L31	606	E21B$.cpc. and window and core$3 and orientat$3 and (battery or power source or power supply)	(US-PGPUB; USPAT; USOCR)	ADJ	ON	ON	2017/08/11 11:48 AM
L32	263	E21B$.cpc. and window and core$3 and orientat$3 and (battery or power source or power supply) and wireline	(US-PGPUB; USPAT; USOCR)	ADJ	ON	ON	2017/08/11 11:54 AM
L33	300	E21B$.cpc. and window and core$3 and	(US-PGPUB; USPAT; USOCR)	ADJ	ON	ON	2017/08/11 11:54 AM

		orientat$3 and (battery or power source or power supply) and (wireline or wire line)					
L34	346	E21B$.cpc. and window and cor$3 and orientat$3 and (battery or power source or power supply) and (wireline or wire line)	(US-PGPUB; USPAT; USOCR)	ADJ	ON	ON	2017/08/11 12:07 PM
L35	1730	window and cor$3 and orientat$3 and (battery or power source or power supply) and (wireline or wire line)	(US-PGPUB; USPAT; USOCR)	ADJ	ON	ON	2017/08/11 12:08 PM
L36	114	L35 AND ((E21B17/028 OR E21B47/09 OR E21B25/16).CPC.)	(US-PGPUB; USPAT; USOCR)	ADJ	ON	ON	2017/08/11 12:20 PM
L37	2	("20120145461"|"6732818").PN.	(US-PGPUB; USPAT; USOCR)	ADJ	ON	ON	2017/08/12 02:07 PM
L38	0	("2012/0145461").URPN.	(USPAT)	ADJ	ON	ON	2017/08/12 02:07 PM
L39	20	("1701724" | "1773915" | "2120240" | "2489566" | "2974739" | "3059707" | "3148740" | "3207239" | "4128134" | "4558749" | "4883131").PN. OR ("6732818").URPN.	(US-PGPUB; USPAT; USOCR)	ADJ	ON	ON	2017/08/12 02:07 PM
L40	28	("20040036474" | "3618221" | "3875796" | "4128134" | "4311201" | "4389792" | "4765414" | "4883131" | "5048619" | "5052502" | "5105894" | "5310013" | "6006844" | "6082453" | "6412575" | "6592875" | "6659196" | "6732818" | "6871410" | "7296638").PN. OR ("7584055").URPN.	(US-PGPUB; USPAT; USOCR)	ADJ	ON	ON	2017/08/12 02:07 PM
L41	38	("1773915" | "2652232" | "3115196" | "5957221").PN. OR ("7296638").URPN.	(US-PGPUB; USPAT; USOCR)	ADJ	ON	ON	2017/08/12 02:08 PM
L42	846	E21B25/00.cpc.	(US-PGPUB; USPAT; USOCR)	ADJ	ON	ON	2017/08/12 02:09 PM
L43	9	L42 and window and core$3 and orientat$3	(US-PGPUB; USPAT; USOCR)	ADJ	ON	ON	2017/08/12 02:09 PM
L44	69	L42 and core$3 and orientat$3	(US-PGPUB; USPAT; USOCR)	ADJ	ON	ON	2017/08/12 02:09 PM
L45	38	("1773915" | "2652232" | "3115196" |	(US-PGPUB; USPAT; USOCR)	ADJ	ON	ON	2017/08/12 02:10 PM

		"5957221").PN. OR ("7296638").URPN.					
L46	101	("2489566" | "2735652" | "2820610" | "3059707" | "3127943" | "3481412" | "3548958" | "4601354" | "4765414" | "4815342" | "4955438" | "4981183" | "4982802" | "5009273" | "5010765" | "5010789" | "5020612" | "5029653" | "5038873" | "5042596" | "5090492" | "5099934" | "5103921" | "5109935" | "5111892" | "5119892" | "5131478" | "5165494" | "5178222" | "5253720" | "5322135" | "5339915" | "5351765" | "5448227" | "5568838").PN. OR ("6006844").URPN.	(US-PGPUB; USPAT; USOCR)	ADJ	ON	ON	2017/08/12 02:11 PM
L47	40	("2820610" | "3059707" | "3346059" | "4515225" | "4562560" | "4715022" | "4765414").PN. OR ("4955438").URPN.	(US-PGPUB; USPAT; USOCR)	ADJ	ON	ON	2017/08/12 02:11 PM
L48	0	("2015/0300162").URPN.	(USPAT)	ADJ	ON	ON	2017/08/12 02:11 PM
L49	0	("2015/0136488").URPN.	(USPAT)	ADJ	ON	ON	2017/08/12 02:11 PM
L50	0	("2015/0029035").URPN.	(USPAT)	ADJ	ON	ON	2017/08/12 02:11 PM
L51	1	"14962484"	(US-PGPUB; USPAT; USOCR)	ADJ	ON	ON	2017/10/30 11:20 AM
L52	12	"5601152"	(US-PGPUB; USPAT; USOCR)	ADJ	ON	ON	2017/10/30 11:22 AM
L53	1	"14692484"	(US-PGPUB; USPAT; USOCR)	ADJ	ON	ON	2017/10/30 11:30 AM
L54	203	(E21B25/16).cpc.	(US-PGPUB; USPAT; USOCR)	ADJ	ON	ON	2017/10/30 11:35 AM
L55	0	core barrel and cavity and electronic intrument and sensor and power source and core and window	(US-PGPUB; USPAT; USOCR)	ADJ	ON	ON	2017/10/30 11:37 AM
L56	1	core barrel and cavity and electronic instrument and sensor and power source and core and window	(US-PGPUB; USPAT; USOCR)	ADJ	ON	ON	2017/10/30 11:37 AM
L57	1	core barrel and cavity and orientation and sensor and power source and core and	(US-PGPUB; USPAT; USOCR)	ADJ	ON	ON	2017/10/30 11:38 AM

		window					
L58	4551	cavity and orientation and sensor and power source and core and window	(US-PGPUB; USPAT; USOCR)	ADJ	ON	ON	2017/10/30 11:38 AM
L59	141	electronic instrument and cavity and orientation and sensor and power source and core and window	(US-PGPUB; USPAT; USOCR)	ADJ	ON	ON	2017/10/30 11:39 AM
L60	2	("2944792").PN.	(US-PGPUB; USPAT; USOCR)	ADJ	ON	ON	2018/02/17 03:54 PM
L61	204	(E21B25/16).cpc.	(US-PGPUB; USPAT; USOCR)	ADJ	ON	ON	2018/02/17 03:57 PM
L62	3	"14692484"	(US-PGPUB; USPAT; USOCR)	ADJ	ON	ON	2019/03/01 09:35 AM
L63	296	((("DRENTH") near3 ("CHRISTOPHER")) OR (("STEWART") near3 ("GORDON")) OR (("HEJLEH") near3 ("KHALED"))).INV.	(US-PGPUB; USPAT; USOCR; EPO; JPO; DERWENT)	ADJ	ON	ON	2019/03/01 09:36 AM
L64	213	(E21B25/16).cpc.	(US-PGPUB; USPAT; USOCR)	ADJ	ON	ON	2019/03/01 09:38 AM
L65	0	WO "20133126955"	(US-PGPUB; USPAT; USOCR)	ADJ	ON	ON	2019/03/01 10:15 AM
L66	6	(US-20150300162-$ or US-20150136488-$ or US-20150029035-$).did. or (US-6006844-$ or US-4955438-$ or US-7296638-$).did.	(US-PGPUB; USPAT)	ADJ	ON	ON	2019/03/01 10:17 AM
L67	3	L76 and window	(US-PGPUB; USPAT; USOCR)	ADJ	ON	ON	2019/03/01 10:17 AM
L68	21	(US-0145461-$ | US-0300162-$ | US-10047581-$ | US-15782230-$ | US-1626126-$ | US-2944792-$ | US-2134921-$ | US-2243173-$ | US-3134600-$ | US-4955438-$ | US-5601152-$ | US-6732818-$ | US-7296638-$ | US-20120145461-$ | US-20150300162-$).DID.	(US-PGPUB; USPAT; USOCR)	ADJ	ON	ON	2019/03/01 11:09 AM
L69	39	("1773915" | "2652232" | "3115196" | "5957221").PN. OR ("7296638").URPN.	(US-PGPUB; USPAT; USOCR)	ADJ	ON	ON	2019/03/01 11:17 AM
L70	20	("3049185" | "3194326"	(US-PGPUB; USPAT;	ADJ	ON	ON	2019/03/01

		| "3333647" | "4279315" | "4558749").PN. OR ("5601152").URPN.	USOCR)				11:17 AM
L71	34	("1752388" | "1867024" | "1870696" | "20010013429" | "20040065482" | "20050025594" | "20090317202" | "20100054884" | "20120241223" | "2484365" | "2689109" | "2708103" | "3140749" | "3517754" | "4848454" | "4951761" | "5161859" | "5601152" | "6698981" | "6799648" | "7281594" | "7296641" | "8763282" | "8960336" | "9162371").PN. OR ("D826299").URPN.	(US-PGPUB; USPAT; USOCR)	ADJ	ON	ON	2019/03/01 11:17 AM
L72	39	("1773915" | "2652232" | "3115196" | "5957221").PN. OR ("7296638").URPN.	(US-PGPUB; USPAT; USOCR)	ADJ	ON	ON	2019/03/01 11:18 AM
L73	7	("20120145461" | "2944792" | "4955438" | "5601152" | "6732818" | "7296638").PN. OR ("10047581").URPN.	(US-PGPUB; USPAT; USOCR)	ADJ	ON	ON	2019/03/01 11:18 AM
L74	0	(L76 or L78) and pressure fiting	(US-PGPUB; USPAT; USOCR)	ADJ	ON	ON	2019/03/01 11:22 AM
L75	2	(L76 or L78) and pressure fitting	(US-PGPUB; USPAT; USOCR)	ADJ	ON	ON	2019/03/01 11:22 AM
L76	4	(L76 or L78) and fitting	(US-PGPUB; USPAT; USOCR)	ADJ	ON	ON	2019/03/01 11:24 AM
L77	2	(L76 or L78) and port same check valve	(US-PGPUB; USPAT; USOCR)	ADJ	ON	ON	2019/03/01 11:24 AM
L78	11	(L74) and port same check valve	(US-PGPUB; USPAT; USOCR)	ADJ	ON	ON	2019/03/01 11:33 AM
L79	3	L74 and pressure fitting	(US-PGPUB; USPAT; USOCR)	ADJ	ON	ON	2019/03/01 11:33 AM
L80	1	"16017334"	(US-PGPUB; USPAT; USOCR)	ADJ	ON	ON	2019/06/24 12:58 AM
L81	3	"14692484"	(US-PGPUB; USPAT; USOCR)	ADJ	ON	ON	2019/06/24 01:00 AM
L82	3	cavity and wire line and port and window and electronic instrument and sensor and power source and transmitter	(US-PGPUB; USPAT; USOCR)	ADJ	ON	ON	2019/06/24 01:24 AM
L83	217	E21B25/16.cpc.	(US-PGPUB; USPAT; USOCR)	ADJ	ON	ON	2019/06/24 01:24 AM

L84	3	"16017334"	(US-PGPUB; USPAT; USOCR)	ADJ	ON	ON	2020/03/15 01:39 PM
L85	9	"10047581"	(US-PGPUB; USPAT; USOCR)	ADJ	ON	ON	2020/03/15 02:25 PM
L86	1	"16588026"	(US-PGPUB; USPAT; USOCR)	ADJ	ON	ON	2020/03/15 02:45 PM
L87	0	E21B25/1.cpc.	(US-PGPUB; USPAT; USOCR)	ADJ	ON	ON	2020/03/15 03:09 PM
L88	221	E21B25/16.cpc.	(US-PGPUB; USPAT; USOCR)	ADJ	ON	ON	2020/03/15 03:09 PM
L89	312	((("DRENTH") near3 ("Christopher")) OR (("STEWART") near3 ("Gordon")) OR (("HEJLEH") near3 ("Khaled"))).INV.	(US-PGPUB; USPAT; USOCR; EPO; JPO; DERWENT)	ADJ	ON	ON	2020/03/15 03:12 PM
L90	8	("20120145461" | "2944792" | "4955438" | "5601152" | "6732818" | "7296638").PN. OR ("10047581").URPN.	(US-PGPUB; USPAT; USOCR)	ADJ	ON	ON	2020/03/15 03:13 PM
L91	8	(US-10047581-$ | US-10465463-$ | US-15782230-$ | US-19188334-$ | US-2946574-$ | US-3016744-$ | US-3134600-$).DID.	(US-PGPUB; USPAT; USOCR)	ADJ	ON	ON	2020/03/15 03:15 PM
L92	8	(US-10047581-$ | US-10465463-$ | US-15782230-$ | US-19188334-$ | US-2946574-$ | US-3016744-$ | US-3134600-$).DID.	(US-PGPUB; USPAT; USOCR)	ADJ	ON	ON	2020/03/15 03:15 PM
L93	23	(US-0145461-$ | US-0300162-$ | US-0305995-$ | US-10047581-$ | US-10465463-$ | US-15782230-$ | US-2944792-$ | US-2134921-$ | US-2243173-$ | US-3134600-$ | US-4955438-$ | US-5601152-$ | US-6732818-$ | US-7296638-$ | US-20120145461-$ | US-20150300162-$ | US-20180305995-$).DID.	(US-PGPUB; USPAT; USOCR)	ADJ	ON	ON	2020/03/15 03:16 PM
L94	0	barrel and cavity and intrument and transmitter and	(US-PGPUB; USPAT; USOCR)	ADJ	ON	ON	2020/03/15 03:22 PM

		orientation data					
L95	25	barrel and cavity and instrument and transmitter and orientation data	(US-PGPUB; USPAT; USOCR)	ADJ	ON	ON	2020/03/15 03:23 PM
L96	1	"16588026"	(US-PGPUB; USPAT; USOCR)	ADJ	ON	ON	2020/06/30 04:06 PM
L97	221	(E21B25/16).cpc.	(US-PGPUB; USPAT; USOCR)	ADJ	ON	ON	2020/06/30 04:08 PM
L98	6704	cavity and instrument and orientation and transmitter and window	(US-PGPUB; USPAT; USOCR)	ADJ	ON	ON	2020/06/30 04:09 PM
L99	469	cavity and instrument and orientation and transmitter and window and (wire line or wireline)	(US-PGPUB; USPAT; USOCR)	ADJ	ON	ON	2020/06/30 04:10 PM
L100	5	cavity and instrument and orientation and transmitter and window and (wire line or wireline) and core barrel	(US-PGPUB; USPAT; USOCR)	ADJ	ON	ON	2020/06/30 04:10 PM
L101	5	cavity and instrument and orientation and transmitter and window and core barrel	(US-PGPUB; USPAT; USOCR)	ADJ	ON	ON	2020/06/30 04:10 PM
L102	5	cavity and instrument and core orientation and transmitter and window and core barrel	(US-PGPUB; USPAT; USOCR)	ADJ	ON	ON	2020/06/30 04:11 PM
L103	5	cavity and instrument and orientation and transmitter and window and core barrel	(US-PGPUB; USPAT; USOCR)	ADJ	ON	ON	2020/06/30 04:12 PM
L104	7	"14692484"	(US-PGPUB; USPAT)	OR	ON	ON	2021/10/22 03:06 PM
L105	1685497	L119 AND check valve	(US-PGPUB; USPAT)	OR	ON	ON	2021/10/22 03:06 PM
L106	7	L119 AND check valve	(US-PGPUB; USPAT)	AND	ON	ON	2021/10/22 03:07 PM
L107	7	L119 AND check valve	(US-PGPUB; USPAT)	ADJ	ON	ON	2021/10/22 03:08 PM
L123	0	cavity AND window AND cire orientation data AND check valve AND transmitter AND (electronic OR instrument) AND sensor	(US-PGPUB; USPAT; USOCR)	ADJ	ON	ON	2022/05/07 10:01 AM
L124	7	cavity AND window AND core orientation data AND check valve AND transmitter AND (electronic OR	(US-PGPUB; USPAT; USOCR)	ADJ	ON	ON	2022/05/07 10:01 AM

		instrument) AND sensor					
L125	671	cavity AND window AND orientation AND check valve AND transmitter AND (electronic OR instrument) AND sensor AND seal$4	(US-PGPUB; USPAT; USOCR)	ADJ	ON	ON	2022/05/07 10:03 AM
L126	567	cavity AND window AND orientation AND check valve AND transmitter AND (electronic OR instrument) AND sensor AND seal$4 AND optical	(US-PGPUB; USPAT; USOCR)	ADJ	ON	ON	2022/05/07 10:04 AM
L127	239	(E21B25/16).cpc.	(US-PGPUB; USPAT; USOCR)	ADJ	ON	ON	2022/05/07 10:04 AM
L128	400	cavity AND window AND orientation AND check valve AND transmitter AND (electronic OR instrument) AND sensor AND seal$4 AND optical AND core	(US-PGPUB; USPAT; USOCR)	ADJ	ON	ON	2022/05/07 10:04 AM
L129	9	cavity AND window AND core WITH orientation AND check valve AND transmitter AND (electronic OR instrument) AND sensor AND seal$4 AND optical	(US-PGPUB; USPAT; USOCR)	ADJ	ON	ON	2022/05/07 10:05 AM
L130	7	L127 AND L126	(US-PGPUB; USPAT; USOCR)	ADJ	ON	ON	2022/05/07 10:05 AM
L131	34	"7703507"	(US-PGPUB; USPAT; USOCR)	ADJ	ON	ON	2022/05/07 10:06 AM
L132	2	"7777643"	(US-PGPUB; USPAT; USOCR)	ADJ	ON	ON	2022/05/07 10:07 AM
L133	1	"20120273272"	(US-PGPUB; USPAT; USOCR)	ADJ	ON	ON	2022/05/07 10:07 AM
L134	1	"17082877"	(US-PGPUB; USPAT; USOCR)	ADJ	ON	ON	2022/05/07 10:09 AM

PE2E SEARCH - Search History (Interference)

Ref #	Hits	Search Query	DBs	Default Operator	Plurals	British Equivalents	Time Stamp
N1	0	core barrel and cavity and electronic instrument and sensor and power source and core and window	(USPAT)	ADJ	ON	ON	2017/10/30 11:37 AM

N2	0	core barrel and cavity and orientation and sensor and power source and core and window	(USPAT)	ADJ	ON	ON	2017/10/30 11:38 AM
N3	1848	cavity and orientation and sensor and power source and core and window	(USPAT)	ADJ	ON	ON	2017/10/30 11:38 AM
N4	72	electronic instrument and cavity and orientation and sensor and power source and core and window	(USPAT)	ADJ	ON	ON	2017/10/30 11:39 AM
N5	73	electronic instrument and cavity and orientation and sensor and power source and core and window	(USPAT)	ADJ	ON	ON	2018/02/17 03:57 PM
N6	0	electronic instrument and cavity and orientation and sensor and power source and core and window and (wireline or wire line) and orientation	(USPAT)	ADJ	ON	ON	2018/02/17 03:59 PM
N7	0	electronic instrument and cavity and orientation and sensor and power source and core and window and (wireline or wire line)	(USPAT)	ADJ	ON	ON	2018/02/17 03:59 PM
N8	73	electronic instrument and cavity and orientation and sensor and power source and core and window and orientation	(USPAT)	ADJ	ON	ON	2018/02/17 03:59 PM
N9	71	electronic instrument and cavity and orientation and sensor and power source and core and window and orientation and port	(USPAT)	ADJ	ON	ON	2018/02/17 03:59 PM
N10	71	electronic instrument and cavity and orientation and sensor and power source and core and window and orientation and port and cavity	(USPAT)	ADJ	ON	ON	2018/02/17 04:00 PM
N11	80	electronic instrument and cavity and orientation and sensor and power source and	(USPAT)	ADJ	ON	ON	2019/06/24 01:21 AM

		core and window and orientation and port and cavity					
N12	0	electronic instrument and cavity and orientation and sensor and power source and core and window and orientation and port and cavity and core barrell head assembly	(USPAT)	ADJ	ON	ON	2019/06/24 01:22 AM
N13	80	electronic instrument and cavity and orientation and sensor and power source and core and window and orientation and port and base	(USPAT)	ADJ	ON	ON	2019/06/24 01:22 AM
N14	57	electronic instrument and cavity and orientation and sensor and power source and core and window and orientation and port and transmitter	(USPAT)	ADJ	ON	ON	2019/06/24 01:22 AM
N15	1	cavity and wire line and port and window and electronic instrument and sensor and power source and transmitter	(USPAT)	ADJ	ON	ON	2019/06/24 01:24 AM
N16	2	cavity and instrument and core orientation and transmitter and window and core barrel	(USPAT)	ADJ	ON	ON	2020/06/30 04:11 PM
N17	2	cavity and instrument and core orientation and transmitter and window	(USPAT)	ADJ	ON	ON	2020/06/30 04:11 PM
N18	2	cavity and instrument and orientation and transmitter and window and core barrel	(USPAT)	ADJ	ON	ON	2020/06/30 04:11 PM
N114	7	cavity AND window AND core orientation data AND check valve AND transmitter AND (electronic OR instrument) AND sensor	(US-PGPUB; USPAT)	ADJ	ON	ON	2022/05/07 10:01 AM
N115	684	cavity AND window AND orientation AND check valve AND transmitter AND (electronic OR instrument) AND sensor	(US-PGPUB; USPAT)	ADJ	ON	ON	2022/05/07 10:02 AM
N116	671	cavity AND window	(US-PGPUB; USPAT)	ADJ	ON	ON	2022/05/07

		AND orientation AND check valve AND transmitter AND (electronic OR instrument) AND sensor AND seal$4					10:03 AM
N117	400	cavity AND window AND orientation AND check valve AND transmitter AND (electronic OR instrument) AND sensor AND seal$4 AND optical AND core	(US-PGPUB; USPAT)	ADJ	ON	ON	2022/05/07 10:05 AM
N118	9	cavity AND window AND core WITH orientation AND check valve AND transmitter AND (electronic OR instrument) AND sensor AND seal$4 AND optical	(US-PGPUB; USPAT)	ADJ	ON	ON	2022/05/07 10:05 AM

UNITED STATES PATENT AND TRADEMARK OFFICE

UNITED STATES DEPARTMENT OF COMMERCE
United States Patent and Trademark Office
Address: COMMISSIONER FOR PATENTS
P.O. Box 1450
Alexandria, Virginia 22313-1450
www.uspto.gov

APPLICATION NUMBER	FILING OR 371(C) DATE	FIRST NAMED APPLICANT	ATTY. DOCKET NO./TITLE
17/082,877	10/28/2020	CHRISTOPHER L. DRENTH	36362.0150U5

CONFIRMATION NO. 1013

POA ACCEPTANCE LETTER

23859
BALLARD SPAHR LLP
SUITE 1600
999 PEACHTREE STREET
ATLANTA, GA 30309-4421

OC000000133503107

Date Mailed: 05/02/2022

NOTICE OF ACCEPTANCE OF POWER OF ATTORNEY

This is in response to the Power of Attorney filed 04/27/2022.

The Power of Attorney in this application is accepted. Correspondence in this application will be mailed to the above address as provided by 37 CFR 1.33.

Questions about the contents of this notice and the requirements it sets forth should be directed to the Office of Data Management, Application Assistance Unit, at **(571) 272-4000** or **(571) 272-4200** or **1-888-786-0101**.

/cnguyen/

Application Number	Application/Control No.	Applicant(s)/Patent under Reexamination	
* 17/082,877 *	17/082,877	DRENTH et al.	
	Examiner	Art Unit	
	WILLS III, MICHAEL R	3676	

Document Code - DISQ	Internal Document - DO NOT MAIL

TERMINAL DISCLAIMER	☑ APPROVED	☐ DISAPPROVED
Date Filed: 27 April 2022	This patent is subject to a Terminal Disclaimer	

Approved/Disapproved by:

2/Tds both approved.
/LAWANA R HIXON/

Technology Center: OPLC

Telephone: (571)272-6074

_____

United States Patent and Trademark Office

Office of the Chief Financial Officer

Document Code:WFEE

User :83605

Sale Accounting Date:04/27/2022

Sale Item Reference Number	Effective Date
17082877	04/27/2022

Document Number	Fee Code	Fee Code Description	Amount Paid	Payment Method
I20224QN54084973	1814	STATUTORY OR TERMINAL DISCLAIMER	$170.00	Deposit Account

Doc Code: PA..
Document Description: Power of Attorney

PTO/AIA/82A (07-13)
Approved for use through 11/30/2014. OMB 0651-0051
U.S. Patent and Trademark Office; U.S. DEPARTMENT OF COMMERCE
Under the Paperwork Reduction Act of 1995, no persons are required to respond to a collection of information unless it displays a valid OMB control number.

TRANSMITTAL FOR POWER OF ATTORNEY TO ONE OR MORE REGISTERED PRACTITIONERS

NOTE: This form is to be submitted with the Power of Attorney by Applicant form (PTO/AIA/82B) to identify the application to which the Power of Attorney is directed, in accordance with 37 CFR 1.5, unless the application number and filing date are identified in the Power of Attorney by Applicant form. If neither form PTO/AIA/82A nor form PTO/AIA82B identifies the application to which the Power of Attorney is directed, the Power of Attorney will not be recognized in the application.

Application Number	17/082,877
Filing Date	October 28, 2020
First Named Inventor	Drenth et al.
Title	Core Barrel Head Assembly With An Integrated Sample Orientation Tool And System For Using Same
Art Unit	3676
Examiner Name	Wills III, Michael R.
Attorney Docket Number	

SIGNATURE of Applicant or Patent Practitioner

Signature	/Joseph P. Anderson III/	Date (Optional)	
Name	Joseph P. Anderson III	Registration Number	59,245
Title (if Applicant is a juristic entity)	Patent Practitioner		
Applicant Name (if Applicant is a juristic entity)	Longyear TM, Inc. and Globaltech PTY LTD		

NOTE: This form must be signed in accordance with 37 CFR 1.33. See 37 CFR 1.4(d) for signature requirements and certifications. If more than one applicant, use multiple forms.

☑ *Total of two forms are submitted.

This collection of information is required by 37 CFR 1.131, 1.32, and 1.33. The information is required to obtain or retain a benefit by the public which is to file (and by the USPTO to process) an application. Confidentiality is governed by 35 U.S.C. 122 and 37 CFR 1.11 and 1.14. This collection is estimated to take 3 minutes to complete, including gathering, preparing, and submitting the completed application form to the USPTO. Time will vary depending upon the individual case. Any comments on the amount of time you require to complete this form and/or suggestions for reducing this burden, should be sent to the Chief Information Officer, U.S. Patent and Trademark Office, U.S. Department of Commerce, P.O. Box 1450, Alexandria, VA 22313-1450. DO NOT SEND FEES OR COMPLETED FORMS TO THIS ADDRESS. **SEND TO: Commissioner for Patents, P.O. Box 1450, Alexandria, VA 22313-1450.**

If you need assistance in completing the form, call 1-800-PTO-9199 and select option 2.

Doc Code: PA..

Document Description: Power of Attorney

PTO/AIA/82B(07-12)
Approved for use through 11/30/2014. OMB 0651-0035
U.S. Patent and Trademark Office; U.S. DEPARTMENT OF COMMERCE

Under the Paperwork Reduction Act of 1995, no persons are required to respond to a collection of information unless it displays a valid OMB control number.

POWER OF ATTORNEY BY APPLICANT

I hereby revoke all previous powers of attorney given in the application identified in the attached transmittal letter.

[x] I hereby appoint Practitioner(s) associated with the following Customer Number as my/our attorney(s) or agent(s), and to transact all business in the United States Patent and Trademark Office connected therewith for the application referenced in the attached transmittal letter (form PTO/AIA/82A or equivalent): 23859

OR

[ ] I hereby appoint Practitioner(s) named below as my/our attorney(s) or agent(s), and to transact all business in the United States Patent and Trademark Office connected therewith for the application referenced in the attached transmittal letter (form PTO/AIA/82A or equivalent):

Name	Registration Number	Name	Registration Number

Please recognize or change the correspondence address for the application identified in the attached transmittal letter to:

[x] The address associated with the above-mentioned Customer Number.

OR

[ ] The address associated with Customer Number:

OR

[ ] Firm or Individual Name					
Address					
City		State		Zip	
Country					
Telephone		Email			

I am the Applicant:

[ ] Inventor or Joint Inventor

[ ] Legal Representative of a Deceased or Legally Incapacitated Inventor

[x] Assignee or Person to Whom the Inventor is Under an Obligation to Assign

[ ] Person Who Otherwise Shows Sufficient Proprietary Interest (*e.g.*, a petition under 37 CFR 1.46(b)(2) was granted in the application or is concurrently being filed with this document)

SIGNATURE of Applicant for Patent

Signature		Date	7/13/15
Name	Fabrizio Rosetti	Telephone	
Title and Company	President, Longyear TM, Inc.		

NOTE: Signature - This form must be signed by the applicant in accordance with 37 CFR 1.33. See 37 CFR 1.4 for signature requirements and certifications. Submit multiple forms for more than one signature, see below *.

[x] *Total of 2 forms are submitted.

This collection of information is required by 37 CFR 1.31, 1.32 and 1.33. The information is required to obtain or retain a benefit by the public which is to file (and by the USPTO to process) an application. Confidentiality is governed by 35 U.S.C. 122 and 37 CFR 1.11 and 1.14. This collection is estimated to take 3 minutes to complete, including gathering, preparing, and submitting the completed application form to the USPTO. Time will vary depending upon the individual case. Any comments on the amount of time you require to complete this form and/or suggestions for reducing this burden, should be sent to the Chief Information Officer, U.S. Patent and Trademark Office, U.S. Department of Commerce, P.O. Box 1450, Alexandria, VA 22313-1450. DO NOT SEND FEES OR COMPLETED FORMS TO THIS ADDRESS. SEND TO: **Commissioner for Patents, P.O. Box 1450, Alexandria, VA 22313-1450.**

If you need assistance in completing the form, call 1-800-PTO-9199 and select option 2.

PTO/AIA/80 (07-12)
Approved for use through 11/30/2014. OMB 0651-0035
U.S. Patent and Trademark Office; U.S DEPARTMENT OF COMMERCE
Under the Paperwork Reduction Act of 1995, no persons are required to respond to a collection of information unless it displays a valid OMB control number.

POWER OF ATTORNEY TO PROSECUTE APPLICATIONS BEFORE THE USPTO

I hereby revoke all previous powers of attorney given in the application identified in the attached statement under 37 CFR 3.73(c).

I hereby appoint:

☐ Practitioners associated with Customer Number: 23859

OR

☒ Practitioner(s) named below (if more than ten patent practitioners are to be named, then a customer number must be used):

Name	Registration Number	Name	Registration Number

As attorney(s) or agent(s) to represent the undersigned before the United States Patent and Trademark Office (USPTO) in connection with any and all patent applications assigned only to the undersigned according to the USPTO assignment records or assignments documents attached to this form in accordance with 37 CFR 3.73(c).

Please change the correspondence address for the application identified in the attached statement under 37 CFR 3.73(c) to:

☒ The address associated with Customer Number:

OR

Firm or Individual Name			
Address			
City		State	Zip
Country			
Telephone		Email	

Assignee Name and Address: GLOBALTECH CORPORATION PTY LTD
ABN 18 087 281 418 of 1/48
Vinnicombe Drive
Canning Vale, Australia 6155

A copy of this form, together with a statement under 37 CFR 3.73(c) (Form PTO/AIA/96 or equivalent) is required to be filed in each application in which this form is used. The statement under 37 CFR 3.73(c) may be completed by one of the practitioners appointed in this form, and must identify the application in which this Power of Attorney is to be filed.

SIGNATURE of Assignee of Record

The individual whose signature and title is supplied below is authorized to act on behalf of the assignee

Signature	Digitally signed by Khaled Hejleh Date: 2015.09.10 10:42:35 +08'00'	Date	
Name		Telephone	
Title	Managing Director		

This collection of information is required by 37 CFR 1.31, 1.32 and 1.33. The information is required to obtain or retain a benefit by the public which is to file (and by the USPTO to process) an application. Confidentiality is governed by 35 U.S.C. 122 and 37 CFR 1.11 and 1.14. This collection is estimated to take 3 minutes to complete, including gathering, preparing, and submitting the completed application form to the USPTO. Time will vary depending upon the individual case. Any comments on the amount of time you require to complete this form and/or suggestions for reducing this burden, should be sent to the Chief Information Officer, U.S. Patent and Trademark Office, U.S. Department of Commerce, P.O. Box 1450, Alexandria, VA 22313-1450. DO NOT SEND FEES OR COMPLETED FORMS TO THIS ADDRESS. **SEND TO: Commissioner for Patents, P.O. Box 1450, Alexandria, VA 22313-1450.**

If you need assistance in completing the form, call 1-800-PTO-9199 and select option 2.

Electronic Acknowledgement Receipt

EFS ID:	45579684
Application Number:	17082877
International Application Number:	
Confirmation Number:	1013
Title of Invention:	CORE BARREL HEAD ASSEMBLY WITH AN INTEGRATED SAMPLE ORIENTATION TOOL AND SYSTEM FOR USING SAME
First Named Inventor/Applicant Name:	CHRISTOPHER L. DRENTH
Customer Number:	23859
Filer:	Joseph P. Anderson/Sharon DeLee
Filer Authorized By:	Joseph P. Anderson
Attorney Docket Number:	36362.0150U5
Receipt Date:	27-APR-2022
Filing Date:	28-OCT-2020
Time Stamp:	18:07:00
Application Type:	Utility under 35 USC 111(a)

Payment information:

Submitted with Payment	no

File Listing:

Document Number	Document Description	File Name	File Size(Bytes)/ Message Digest	Multi Part /.zip	Pages (if appl.)
1	Power of Attorney	36362_0150U5_POA_2.pdf	431575 ecf1a70f94db7323d8cbe64c4f3ba116159edb77	no	3

Warnings:

Information:	
Total Files Size (in bytes):	431575

This Acknowledgement Receipt evidences receipt on the noted date by the USPTO of the indicated documents, characterized by the applicant, and including page counts, where applicable. It serves as evidence of receipt similar to a Post Card, as described in MPEP 503.

New Applications Under 35 U.S.C. 111
If a new application is being filed and the application includes the necessary components for a filing date (see 37 CFR 1.53(b)-(d) and MPEP 506), a Filing Receipt (37 CFR 1.54) will be issued in due course and the date shown on this Acknowledgement Receipt will establish the filing date of the application.
National Stage of an International Application under 35 U.S.C. 371
If a timely submission to enter the national stage of an international application is compliant with the conditions of 35 U.S.C. 371 and other applicable requirements a Form PCT/DO/EO/903 indicating acceptance of the application as a national stage submission under 35 U.S.C. 371 will be issued in addition to the Filing Receipt, in due course.
New International Application Filed with the USPTO as a Receiving Office
If a new international application is being filed and the international application includes the necessary components for an international filing date (see PCT Article 11 and MPEP 1810), a Notification of the International Application Number and of the International Filing Date (Form PCT/RO/105) will be issued in due course, subject to prescriptions concerning national security, and the date shown on this Acknowledgement Receipt will establish the international filing date of the application.

ATTORNEY DOCKET NO. 36362.0150U5
PATENT
VIA EFS-WEB

IN THE UNITED STATES PATENT AND TRADEMARK OFFICE

In re Application of	)	
	)	
DRENTH et al.	)	Art Unit: 3676
	)	
Application No.: 17/082,877	)	Examiner: Wills III, Michael R.
	)	
Filing Date: October 28, 2020	)	Confirmation No.: 1013
	)	
FOR: **CORE BARREL HEAD ASSEMBLY WITH AN INTEGRATED SAMPLE ORIENTATION TOOL AND SYSTEM FOR USING SAME**	)	

RESPONSE TO NON-FINAL OFFICE ACTION

MAIL STOP AMENDMENT
Commissioner for Patents
P.O. Box 1450
Alexandria, VA 22313-1450

Ballard Spahr LLP
Customer Number 23859

April 27, 2022

Commissioner:

In response to the Office Action dated October 27, 2021 (the "Office Action"), please amend the above-referenced application as set forth below and consider the Remarks that follow.

Amendments to the Specification begin on page 2 of this Amendment.

Amendments to the Claims begin on page 6 of this Amendment.

Amendments to the Drawings begin on page 10 of this Amendment.

Remarks begin on page 11 of this Amendment.

AMENDMENTS TO THE SPECIFICATION

Please replace original paragraph [0044] with the following paragraph:

The core barrel head assembly 30 has a ~~proximal~~ distal end 32 that is operatively oriented toward the drill bit end of the drill string and an opposed ~~distal~~ proximal end 34. As shown in Figures 1 and 5-6, the core barrel head assembly 30 has an elongate tube body 60 that is conventionally joined to a conventional wire line retrieval portion of a head assembly 10. Thus, the head assembly of the drill string is complete without the necessity for the use of an unwieldy extension tube as required in the prior art designs.

Please replace original paragraph [0047] with the following paragraph:

In one aspect, as shown, a plurality of windows 74 can be defined in the elongate tube body that extend from the exterior surface 61 of the elongate tube body into the second interior chamber 70 proximate the closed proximal end 72 of the second interior chamber. In a further aspect, an orientation indicator module 80 can be provided that comprises a plurality of light emitters [[82]] 88. The orientation indicator module 80 can be sized and shaped to sealingly close the second interior chamber from any intrusion of pressurized fluid into the second interior chamber 70 via the defined plurality of windows 74.

Please replace original paragraph [0048] with the following paragraph:

In another aspect, it is contemplated that the second interior cavity can comprise at least one orienting slot defined therein. In this aspect, the orientation indicator module can be oriented manually and the desired position can be maintained to the at least one O-ring seal 84 described below. Optionally, in a further aspect, the orientation indicator module [[82]] 80 is configured to orient or otherwise position a plurality of light emitters 88 so that each light emitter underlies one window.

Please replace original paragraph [0055] with the following paragraph:

Further, as one skilled in the art will appreciate, because the orientation indicator module [[90]] 80 is sealingly disposed in the proximal end of the second interior chamber 70, the least one electronic instrument 40, the power source 50 and, optionally, the communication means to receive and/or transmit orientation data is disposed in operative

REFLEX EXHIBIT 1013 - 59/432

contact with the orientation indicator module, and the seal coupler 90 is disposed in contact with the least one electronic instrument 40, the power source 50 and, optionally, the communication means to receive and/or transmit orientation data, as the proximal end assembly of the check valve assembly is threadably coupled to the distal 73 end of the elongate tube body, both the sealing means on the respective orientation indicator module 80 and the seal coupler 90 are driven into a sealed position therein the second interior cavity to affect complete hermeticity of the second interior cavity.

Please replace original paragraph [0059] with the following paragraph:

Referring now to Figure 8, an alternative embodiment of the core barrel head assembly [[30]] 130 is shown that comprises at least one electronic instrument 40 that is configured to obtain orientation data, a operatively electrically coupled power source 50 and communication means to receive and/or transmit orientation data.

Please replace original paragraph [0060] with the following paragraph:

In this aspect the core barrel head assembly 130 has a ~~proximal~~ distal end 132 that is operatively oriented toward the drill bit end of the drill string and an opposed ~~distal~~ proximal end 134. As shown in Figure 8, the core barrel head assembly 130 is conventionally joined to a conventional wire line retrieval portion of a head assembly 10. Thus, the head assembly of the drill string is complete without the necessity for the use of an unwieldy extension tube as required in the prior art designs.

Please replace original paragraph [0061] with the following paragraph:

The core barrel head assembly 130 has an elongate tube body 160 that is operably coupled to elongate hollow spindle 170 that is, in turn, operably coupled to a selectively open check valve assembly 180. The elongate tube body has a threaded ~~proximal~~ distal end 162 that defines an internal bushing mount 163. The open ~~distal~~ proximal end 164 of the elongate tube body defines an internal shoulder 165 that is sized and shaped to receive at least one conventional cylindrical bearing 190.

REFLEX EXHIBIT 1013 - 60/432

Please replace original paragraph [0062] with the following paragraph:

A bushing 192 is mounted in the bushing mount and is sized and shaped to rotatably receive the ~~proximal~~ distal end 172 of the hollow spindle 170. As shown in the figures, a mid-portion of the hollow spindle is rotatably supported by the at least one bearing 190. In a further aspect, a nut 194 is coupled to a treaded portion 174 of the hollow spindle 170 adjacent to the ~~proximal~~ distal end of the hollow spindle 170.

Please replace original paragraph [0066] with the following paragraph:

In a further aspect, to provide fluid control for the wire line operation, a selectively open check valve assembly 180 is provided. In one aspect, the check valve assembly 180 comprises a coupled end assembly 182 defining a ~~proximally~~ distally tapered seat 184 that defines an interior chamber 185 for operative receipt of a check ball 195.

Please replace original paragraph [0067] with the following paragraph:

In one aspect, the coupled end assembly 182 of the check valve assembly can define a female threaded coupling that is configured to be threadably coupled to the male threads defined on the exterior surface of the ~~distal~~ proximal end 173 of the hollow spindle 170. Thus, as shown in the figures, the tapered seat 184 is operably coupled to the ~~distal~~ proximal end 173 of the spindle 170 such that the hollow interior of the spindle 170 can be selectively placed in fluid communication with fluid governed by the check valve assembly 180.

Please replace original paragraph [0069] with the following paragraph:

In this aspect, the interior chamber 185 can have a ~~proximally~~ distally tapered seat 184 that is adapted to selectively receive the ball 195 that is sized to selectively block the ~~proximally~~ distally tapered seat. One skilled in the art will appreciate that the interior chamber 185 of the check valve assembly 180 can be sized and shaped to allow the ball to selectively move axially between an open position, in which the ball is spaced proximally away from the surface of the tapered seat so that pressurized fluid can move out through the elongate spindle into the proximal end of the check valve assembly and subsequently through the interior chamber of the check valve assembly to exit out of the at least one port, and a closed position, in which the ball is pressurized against the surface of the tapered seat

REFLEX EXHIBIT 1013 - 61/432

so that pressurized fluid cannot move through the check valve assembly to through the hollow spindle.

REFLEX EXHIBIT 1013 - 62/432

AMENDMENTS TO THE CLAIMS

1. (Currently Amended) A core barrel head assembly having an exterior surface and comprising:

a first interior cavity;

a sealed interior cavity spaced distally from the first interior cavity and having a closed proximal end;

a threaded proximal end portion for coupling to a wire line retrieval portion of a head assembly, wherein the first interior cavity extends distally from the threaded proximal end portion;

a threaded distal end portion, wherein the sealed interior cavity extends distally to the threaded distal end portion of the core barrel head assembly, wherein the threaded distal end portion defines an opening;

a seal coupler that is configured to be sealingly received in the opening of the threaded distal end portion;

a window that extends from the exterior surface into optical communication with the sealed interior cavity;

at least one electronic instrument that is configured to obtain core orientation data, wherein the at least one electronic instrument comprises at least one digital and/or electro-mechanical sensor in a core orientation data recording tool; [[and]]

a check valve assembly that is configured to drive the seal coupler into a sealed position within the opening of the threaded distal end portion, wherein the check valve assembly is configured to provide fluid control for wire line operation; and

a transmitter configured to transmit core orientation data,

wherein the sealed interior cavity is sized and shaped to enclose the at least one electronic instrument.

2. (Currently Amended) The core barrel head assembly of claim 1, further comprising:

a base portion, wherein the first interior cavity extends distally from the threaded proximal end portion to the base portion; and

a port positioned proximate the base portion and extending from the exterior surface into fluid communication with the first interior cavity~~;~~

REFLEX EXHIBIT 1013 - 63/432

~~a power source in operable communication with the at least one electronic instrument, wherein the power source is mounted therein the interior cavity;~~

~~an open and threaded distal end portion, wherein the sealed interior cavity extends distally to the open and threaded distal end portion of the core barrel head assembly; and~~

~~a check valve assembly configured to affect a hermetical seal of the sealed interior cavity and to provide fluid control for wire line operation~~.

3. (New) The core barrel head assembly of claim 2, further comprising a power source in operable communication with the at least one electronic instrument, wherein the power source is mounted therein the interior cavity.

4. (New) The core barrel head assembly of claim 2, further comprising a grease fitting mounted in the port to allow for selective passage of grease or other lubricant to and from the exterior surface of the core barrel head assembly into communication with the first interior cavity.

5. (New) The core barrel head assembly of claim 1, wherein the sealed interior cavity is sized and shaped to hermetically enclose the transmitter.

6. (New) The core barrel head assembly of claim 1, further comprising an orientation indicator module comprising a light emitter.

7. (New) The core barrel head assembly of claim 6, wherein the core barrel head assembly comprises a plurality of windows that extend from the exterior surface into optical communication with the sealed interior cavity proximate the closed proximal end of the sealed interior cavity, wherein the orientation indicator module is sized and shaped to sealingly close the sealed interior cavity from any intrusion of pressurized fluid into the sealed interior cavity via the plurality of windows.

8. (New) The core barrel head assembly of claim 7, wherein the orientation indicator module is configured to orient or otherwise position the plurality of light emitters so that each light emitter underlies one window.

9. (New) The core barrel head assembly of claim 1, wherein the check valve assembly comprises a coupled proximal end assembly and a distally tapered seat that defines an interior chamber for operative receipt of a check ball.

10. (New) The core barrel head assembly of claim 9, wherein the proximal end assembly of the check valve assembly defines a female threaded coupling that is configured to be

threadably coupled to male threads defined on an exterior surface of the distal end portion of the core barrel head assembly.

11. (New) The core barrel head assembly of claim 9, wherein the interior chamber of the check valve assembly extends to a distal end of the check valve assembly, and wherein the check valve assembly further defines at least one port that extends from an exterior surface of the check valve assembly and is in fluid communication with the interior chamber of the check valve assembly.

12. (New) The core barrel head assembly of claim 1, wherein the at least one electronic instrument is programmed to obtain orientation data when the at least one electronic instrument senses no movement of the at least one electronic instrument.

13. (New) The core barrel head assembly of claim 12, wherein the at least one electronic instrument is programmed to obtain orientation data when the at least one electronic instrument senses no vibrations, and wherein the at least one electronic instrument is programmed to not obtain orientation data when the at least one electronic instrument determines that the core barrel head assembly is in motion while descending down or ascending up the hole and during drilling.

14. (New) The core barrel head assembly of claim 1, wherein the at least one electronic instrument is programmed to obtain orientation data based on a predetermined time interval scheme.

15. (New) The core barrel head assembly of claim 1, wherein the at least one electronic instrument is configured to obtain orientation data at random periods of time.

16. (New) The core barrel head assembly of claim 1, wherein the at least one electronic instrument is programmed to:

record orientation data relating to an orientation of the at least electronic instrument in a borehole; and

receive an interrogation command from an external communication device.

17. (New) The core barrel head assembly of claim 1, wherein the transmitter is configured to transmit core orientation data to a remote device through the window.

18. (New) The core barrel head assembly of claim 6, wherein the light emitter underlies the window, and wherein following retrieval of the core barrel head assembly from down a borehole, the light emitter is configured to provide a visual indication that a desired rotational orientation of the core barrel head assembly has been achieved.

19. (New) The core barrel head assembly of claim 18, wherein the light emitter is further configured to provide a visual indication that further rotation of the core barrel head assembly is required to reach the desired rotational orientation.

20. (New) The core barrel head assembly of claim 1, further comprising an O-ring seal that is mounted on a portion of the seal coupler and configured to seal between the portion of the seal coupler and an interior surface of the threaded distal end portion.

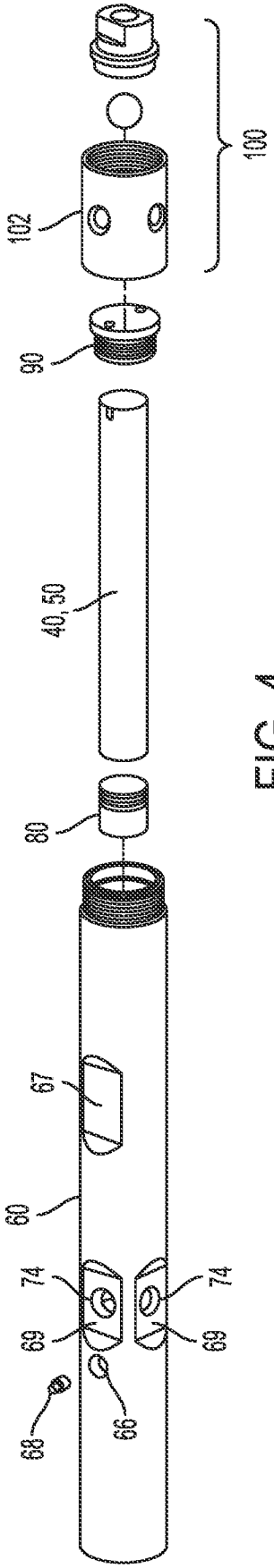
100
102
90
40, 50
80
67
60
74
69
68
66

FIG. 4

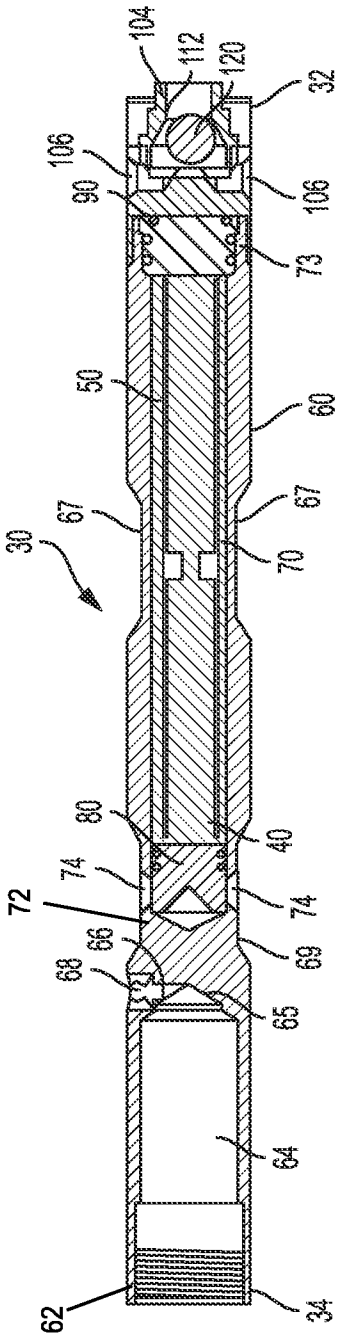
104
112
120
32
106
90
73
50
60
67
30
70
80
40
74
72
66
68
69
65
64
62
34

FIG. 5

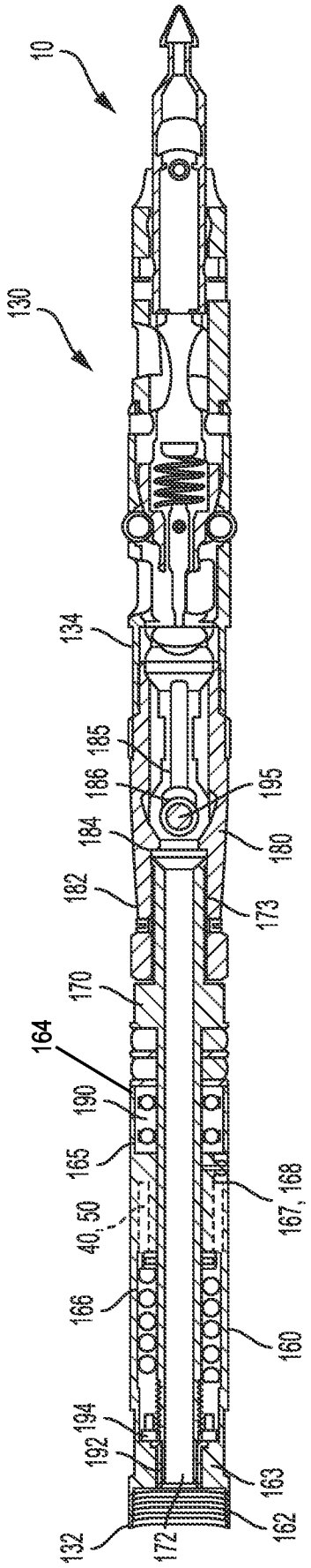
10
130
134
185
186
184
182
170
164
190
165
40, 50
166
194
192
132
172
195
180
173
167, 168
160
163
162

FIG. 8

Electronic Patent Application Fee Transmittal

Application Number:	17082877
Filing Date:	28-Oct-2020
Title of Invention:	CORE BARREL HEAD ASSEMBLY WITH AN INTEGRATED SAMPLE ORIENTATION TOOL AND SYSTEM FOR USING SAME
First Named Inventor/Applicant Name:	CHRISTOPHER L. DRENTH
Filer:	Joseph P. Anderson/Sharon DeLee
Attorney Docket Number:	36362.0150U5

Filed as Large Entity

Filing Fees for Utility under 35 USC 111(a)

Description	Fee Code	Quantity	Amount	Sub-Total in USD($)
Basic Filing:				
Pages:				
Claims:				
Miscellaneous-Filing:				
Petition:				
Patent-Appeals-and-Interference:				
Post-Allowance-and-Post-Issuance:				
Extension-of-Time:				

Description	Fee Code	Quantity	Amount	Sub-Total in USD($)
Extension - 3 months with $0 paid	1253	1	1480	1480
Miscellaneous:				
			Total in USD ($)	**1480**

Electronic Acknowledgement Receipt

EFS ID:	45578465
Application Number:	17082877
International Application Number:	
Confirmation Number:	1013
Title of Invention:	CORE BARREL HEAD ASSEMBLY WITH AN INTEGRATED SAMPLE ORIENTATION TOOL AND SYSTEM FOR USING SAME
First Named Inventor/Applicant Name:	CHRISTOPHER L. DRENTH
Customer Number:	23859
Filer:	Joseph P. Anderson
Filer Authorized By:	
Attorney Docket Number:	36362.0150U5
Receipt Date:	27-APR-2022
Filing Date:	28-OCT-2020
Time Stamp:	17:41:57
Application Type:	Utility under 35 USC 111(a)

Payment information:

Submitted with Payment	yes
Payment Type	CARD
Payment was successfully received in RAM	$1480
RAM confirmation Number	E20224QH42120246
Deposit Account	
Authorized User	
The Director of the USPTO is hereby authorized to charge indicated fees and credit any overpayment as follows:	

File Listing:

Document Number	Document Description	File Name	File Size(Bytes)/ Message Digest	Multi Part /.zip	Pages (if appl.)
1	Extension of Time	36362_0150U5_EOT.pdf	69804 03ce164f11621613511c497dc85822099ba34af8	no	1
Warnings:					
Information:					
2		36362_0150U5_Response_to_Office_Action.pdf	56789 67677e07b1cf2a3e9f605a8197e62ae0d7891b0a	yes	13

Multipart Description/PDF files in .zip description

Document Description	Start	End
Amendment/Request for Reconsideration-After Non-Final Rejection	1	1
Specification	2	5
Claims	6	9
Drawings-only black and white line drawings	10	10
Applicant Arguments/Remarks Made in an Amendment	11	13

Warnings:					
Information:					
3	Drawings-only black and white line drawings	36362_0150U5_Replacement_Sheets.pdf	122404 0e2d9589e3d151851647afe34de2d60d5f6d19dc	no	2
Warnings:					
Information:					
4	Fee Worksheet (SB06)	fee-info.pdf	38612 445db52478b939c7f4b5ffd14b3c1d28273890ff	no	2
Warnings:					
Information:					

Total Files Size (in bytes):	287609

This Acknowledgement Receipt evidences receipt on the noted date by the USPTO of the indicated documents, characterized by the applicant, and including page counts, where applicable. It serves as evidence of receipt similar to a Post Card, as described in MPEP 503.

New Applications Under 35 U.S.C. 111
If a new application is being filed and the application includes the necessary components for a filing date (see 37 CFR 1.53(b)-(d) and MPEP 506), a Filing Receipt (37 CFR 1.54) will be issued in due course and the date shown on this Acknowledgement Receipt will establish the filing date of the application.
National Stage of an International Application under 35 U.S.C. 371
If a timely submission to enter the national stage of an international application is compliant with the conditions of 35 U.S.C. 371 and other applicable requirements a Form PCT/DO/EO/903 indicating acceptance of the application as a national stage submission under 35 U.S.C. 371 will be issued in addition to the Filing Receipt, in due course.
New International Application Filed with the USPTO as a Receiving Office
If a new international application is being filed and the international application includes the necessary components for an international filing date (see PCT Article 11 and MPEP 1810), a Notification of the International Application Number and of the International Filing Date (Form PCT/RO/105) will be issued in due course, subject to prescriptions concerning national security, and the date shown on this Acknowledgement Receipt will establish the international filing date of the application.

PTO/AIA/22 (10-20)
Approved for use through 11/30/2020. OMB 0651-0031
U.S. Patent and Trademark Office; U.S. DEPARTMENT OF COMMERCE
Under the Paperwork Reduction Act of 1995, no persons are required to respond to a collection of information unless it displays a valid OMB control number.

PETITION FOR EXTENSION OF TIME UNDER 37 CFR 1.136(a)

Docket Number (Optional): 36362.0150U5

Application Number: 17/082,877

Filed: October 28, 2020

For: Core Barrel Head Assembly With An Integrated Sample Orientation Tool And System For Using Same

Art Unit: 3676

Examiner: Willis III, Michael R.

This is a request under the provisions of 37 CFR 1.136(a) to extend the period for filing a reply in the above-identified application.

The requested extension and fee are as follows (check time period desired and enter the appropriate fee below):

		Fee	Small Entity Fee	Micro Entity Fee	
☐	One month (37 CFR 1.17(a)(1))	$220	$110	$55	$
☐	Two months (37 CFR 1.17(a)(2))	$640	$320	$160	$
☑	Three months (37 CFR 1.17(a)(3))	$1,480	$740	$370	$ 1,480.00
☐	Four months (37 CFR 1.17(a)(4))	$2,320	$1,160	$580	$
☐	Five months (37 CFR 1.17(a)(5))	$3,160	$1,580	$790	$

☐ Applicant asserts small entity status. See 37 CFR 1.27.

☐ Applicant certifies micro entity status. See 37 CFR 1.29.
Form PTO/SB/15A or B or equivalent must either be enclosed or have been submitted previously.

☐ A check in the amount of the fee is enclosed.

☐ Payment by credit card. Form PTO-2038 is attached.

☑ The Director has already been authorized to charge fees in this application to a Deposit Account.

☑ The Director is hereby authorized to charge any fees which may be required, or credit any overpayment, to Deposit Account Number 14-0629.

☑ Payment made via EFS-Web.

WARNING: Information on this form may become public. Credit card information should not be included on this form. Provide credit card information and authorization on PTO-2038.

I am the

☐ applicant.

☑ attorney or agent of record. Registration number 59,245.

☐ attorney or agent acting under 37 CFR 1.34. Registration number _____.

/Joseph P. Anderson III/
Signature

April 27, 2022
Date

Joseph P. Anderson III
Typed or printed name

(678) 420-9300
Telephone Number

NOTE: This form must be signed in accordance with 37 CFR 1.33. See 37 CFR 1.4 for signature requirements and certifications. Submit multiple forms if more than one signature is required, see below*.

☑ * Total of _____ forms are submitted.

This collection of information is required by 37 CFR 1.136(a). The information is required to obtain or retain a benefit by the public, which is to file (and by the USPTO to process) an application. Confidentiality is governed by 35 U.S.C. 122 and 37 CFR 1.11 and 1.14. This collection is estimated to take 6 minutes to complete, including gathering, preparing, and submitting the completed application form to the USPTO. Time will vary depending upon the individual case. Any comments on the amount of time you require to complete this form and/or suggestions for reducing this burden should be sent to the Chief Information Officer, U.S. Patent and Trademark Office, U.S. Department of Commerce, P.O. Box 1450, Alexandria, VA 22313-1450. DO NOT SEND FEES OR COMPLETED FORMS TO THIS ADDRESS. SEND TO: Mail Stop PCT, Commissioner for Patents, P.O. Box 1450, Alexandria, VA 22313-1450.

AMENDMENTS TO THE DRAWINGS

Please replace original FIGS. 5 and 8 with the versions of FIGS. 5 and 8 provided on the attached Replacement Sheets.

Attachments: Two (2) Replacement Sheets

REFLEX EXHIBIT 1013 - 75/432

REMARKS

Claims 1-2 are under consideration. As set forth herein, claims 1 and 2 have been amended, and new claims 3-20 have been added. No claims have been canceled. Therefore, after entry of this Amendment, claims 1-20 will be under consideration.

Amendments to the Specification

As set forth herein, Applicant has amended the specification to ensure that consistent numeric references are used throughout the specification. Applicant has presented additional amendments to ensure that the terms "proximal" and "distal" are used consistently throughout the application (in the manner reflected in the original drawings and claims).

Amendments to the Drawings

As set forth herein, Applicant has submitted replacement versions of FIGS. 5 and 8. FIG. 5 has been amended to show elements 62, 72, which were identified in the original specification. FIG. 8 has been amended to show element 164 and to identify the core barrel head assembly as element 130 instead of element 30. These amendments are consistent with the original specification and drawings.

Objections to the Drawings

The drawings were objected to for including reference characters 62 and 82, which were not included in the description. As set forth herein, Applicant has amended FIG. 5 to include reference character 62. Additionally, Applicant has amended the specification to remove reference character 82 and to consistently refer to the light emitters using reference character 88. Accordingly, Applicant respectfully requests that the objections to the drawings be withdrawn.

Allowable Subject Matter

Applicant would like to thank the Examiner for the indication that claim 2 would be allowable if rewritten in independent form.

Rejection Under 35 U.S.C. § 112

Claim 2 was rejected under 35 U.S.C. § 112(b) as allegedly being ambiguous and indefinite. As set forth herein, Applicant has amended claim 2 to remove the language giving rise to this rejection. Accordingly, Applicant respectfully requests that the rejection be withdrawn.

REFLEX EXHIBIT 1013 - 76/432

Rejection Under 35 U.S.C. § 102

Claim 1 was rejected under 35 U.S.C. § 102(a)(1) as allegedly being anticipated by WO 2008/113127 to Beach et al. (hereinafter, "Beach"). Applicant respectfully traverses this rejection. Nonetheless, in an effort to facilitate prosecution, Applicant has amended claim 1 to recite, in part: "a threaded distal end portion, wherein the sealed interior cavity extends distally to the threaded distal end portion of the core barrel head assembly, wherein the threaded distal end portion defines an opening"; "a seal coupler that is configured to be sealingly received in the opening of the threaded distal end portion"; and "a check valve assembly that is configured to drive the seal coupler into a sealed position within the opening of the threaded distal end portion, wherein the check valve assembly is configured to provide fluid control for wire line operation." Applicant respectfully submits that Beach fails to disclose or render obvious the combination of features recited in claim 1, as amended. Accordingly, Applicant respectfully requests that the rejection of claim 1 be withdrawn.

Double Patent Rejections

Claims 1-2 were rejected on the ground of nonstatutory double patenting as being unpatentable over claims 1 and 21 of U.S. Patent No. 10,047,581. As requested by the Office Action, submitted herewith is an eTerminal Disclaimer to obviate the double patenting rejection. Accordingly, Applicant respectfully requests that the nonstatutory double patenting rejections be withdrawn.

REFLEX EXHIBIT 1013 - 77/432

CONCLUSION

In view of the above amendments and/or remarks, each of the presently pending claims in this application is believed to be in immediate condition for allowance. Accordingly, the Examiner is respectfully requested to pass this application to issue. The Examiner is invited and encouraged to contact directly the undersigned is such contact may enhance the efficient prosecution of this application to issue.

An electronic payment in the amount of $1,640.00, representing the large-entity fees for a terminal disclaimer and a three-month extension of time, is submitted herewith. No additional fee(s) are believed due; however, the Commissioner is hereby authorized to charge any additional fees which may be required, or credit any overpayment to Deposit Account No. 14-0629.

Respectfully submitted,

Electronic signature: /Joseph P. Anderson, III/
Joseph P. Anderson, III
Registration No.: 59,245
BALLARD SPAHR LLP
Correspondence Customer Number: 23859

REFLEX EXHIBIT 1013 - 78/432

PTO/AIA/26 (04-14)
Approved for use through 11/30/2020. OMB 0651-0031
U.S. Patent and Trademark Office; U.S. DEPARTMENT OF COMMERCE
Under the Paperwork Reduction Act of 1995, no persons are required to respond to a collection of information unless it displays a valid OMB control number.

TERMINAL DISCLAIMER TO OBVIATE A DOUBLE PATENTING REJECTION OVER A "PRIOR" PATENT

Docket Number (Optional)
36362.0150U5

In re Application of: Michael A. Chen

Application No.: 17/082,877

Filed: October 28, 2020

For: Core Barrel Head Assembly With An Integrated Sample Orientation Tool And System For Using Same

The applicant, Longyear TM, Inc., owner of 50 percent interest in the instant application hereby disclaims, except as provided below, the terminal part of the statutory term of any patent granted on the instant application which would extend beyond the expiration date of the full statutory term of **prior patent** No. 10,047,581 as the term of said **prior patent** is presently shortened by any terminal disclaimer. The applicant hereby agrees that any patent so granted on the instant application shall be enforceable only for and during such period that it and the **prior patent** are commonly owned. This agreement runs with any patent granted on the instant application and is binding upon the grantee, its successors or assigns.

In making the above disclaimer, the applicant does not disclaim the terminal part of the term of any patent granted on the instant application that would extend to the expiration date of the full statutory term of the **prior patent**, "as the term of said **prior patent** is presently shortened by any terminal disclaimer," in the event that said **prior patent** later:

expires for failure to pay a maintenance fee;
is held unenforceable;
is found invalid by a court of competent jurisdiction;
is statutorily disclaimed in whole or terminally disclaimed under 37 CFR 1.321;
has all claims canceled by a reexamination certificate;
is reissued; or
is in any manner terminated prior to the expiration of its full statutory term as presently shortened by any terminal disclaimer.

Check either box 1 or 2 below, if appropriate.

1. ☐ The undersigned is the applicant. If the applicant is an assignee, the undersigned is authorized to act on behalf of the assignee.

I hereby acknowledge that any willful false statements made are punishable under 18 U.S.C. 1001 by fine or imprisonment of not more than five (5) years, or both.

2. ☑ The undersigned is an attorney or agent of record. Reg. No. 59,245

/Joseph P. Anderson III/	April 27, 2022
Signature	Date
Joseph P. Anderson III	
Typed or printed name	
Attorney for Applicant	(678) 420-9300
Title	Telephone Number

☑ Terminal disclaimer fee under 37 CFR 1.20(d) included.

WARNING: Information on this form may become public. Credit card information should not be included on this form. Provide credit card information and authorization on PTO-2038.

This collection of information is required by 37 CFR 1.321. The information is required to obtain or retain a benefit by the public which is to file (and by the USPTO to process) an application. Confidentiality is governed by 35 U.S.C. 122 and 37 CFR 1.11 and 1.14. This collection is estimated to take 12 minutes to complete, including gathering, preparing, and submitting the completed application form to the USPTO. Time will vary depending upon the individual case. Any comments on the amount of time you require to complete this form and/or suggestions for reducing this burden, should be sent to the Chief Information Officer, U.S. Patent and Trademark Office, U.S. Department of Commerce, P.O. Box 1450, Alexandria, VA 22313-1450. DO NOT SEND FEES OR COMPLETED FORMS TO THIS ADDRESS. **SEND TO: Commissioner for Patents, P.O. Box 1450, Alexandria, VA 22313-1450.**

If you need assistance in completing the form, call 1-800-PTO-9199 and select option 2.

PTO/AIA/26 (04-14)
Approved for use through 11/30/2020. OMB 0651-0031
U.S. Patent and Trademark Office; U.S. DEPARTMENT OF COMMERCE
Under the Paperwork Reduction Act of 1995, no persons are required to respond to a collection of information unless it displays a valid OMB control number.

TERMINAL DISCLAIMER TO OBVIATE A DOUBLE PATENTING REJECTION OVER A "PRIOR" PATENT

Docket Number (Optional)
36362.0150U5

In re Application of: Michael A. Chen

Application No.: 17/082,877

Filed: October 28, 2020

For: Core Barrel Head Assembly With An Integrated Sample Orientation Tool And System For Using Same

The applicant, Globaltech Corporation PTY LTD, owner of 50 percent interest in the instant application hereby disclaims, except as provided below, the terminal part of the statutory term of any patent granted on the instant application which would extend beyond the expiration date of the full statutory term of **prior patent** No. 10,047,581 as the term of said **prior patent** is presently shortened by any terminal disclaimer. The applicant hereby agrees that any patent so granted on the instant application shall be enforceable only for and during such period that it and the **prior patent** are commonly owned. This agreement runs with any patent granted on the instant application and is binding upon the grantee, its successors or assigns.

In making the above disclaimer, the applicant does not disclaim the terminal part of the term of any patent granted on the instant application that would extend to the expiration date of the full statutory term of the **prior patent**, "as the term of said **prior patent** is presently shortened by any terminal disclaimer," in the event that said **prior patent** later:

expires for failure to pay a maintenance fee;
is held unenforceable;
is found invalid by a court of competent jurisdiction;
is statutorily disclaimed in whole or terminally disclaimed under 37 CFR 1.321;
has all claims canceled by a reexamination certificate;
is reissued; or
is in any manner terminated prior to the expiration of its full statutory term as presently shortened by any terminal disclaimer.

Check either box 1 or 2 below, if appropriate.

1. ☐ The undersigned is the applicant. If the applicant is an assignee, the undersigned is authorized to act on behalf of the assignee.

I hereby acknowledge that any willful false statements made are punishable under 18 U.S.C. 1001 by fine or imprisonment of not more than five (5) years, or both.

2. ☑ The undersigned is an attorney or agent of record. Reg. No. 59,245

/Joseph P. Anderson III/	April 27, 2022
Signature	Date
Joseph P. Anderson III	
Typed or printed name	
Attorney for Applicant	(678) 420-9300
Title	Telephone Number

☑ Terminal disclaimer fee under 37 CFR 1.20(d) included.

WARNING: Information on this form may become public. Credit card information should not be included on this form. Provide credit card information and authorization on PTO-2038.

This collection of information is required by 37 CFR 1.321. The information is required to obtain or retain a benefit by the public which is to file (and by the USPTO to process) an application. Confidentiality is governed by 35 U.S.C. 122 and 37 CFR 1.11 and 1.14. This collection is estimated to take 12 minutes to complete, including gathering, preparing, and submitting the completed application form to the USPTO. Time will vary depending upon the individual case. Any comments on the amount of time you require to complete this form and/or suggestions for reducing this burden, should be sent to the Chief Information Officer, U.S. Patent and Trademark Office, U.S. Department of Commerce, P.O. Box 1450, Alexandria, VA 22313-1450. DO NOT SEND FEES OR COMPLETED FORMS TO THIS ADDRESS. **SEND TO: Commissioner for Patents, P.O. Box 1450, Alexandria, VA 22313-1450.**

If you need assistance in completing the form, call 1-800-PTO-9199 and select option 2.

Electronic Patent Application Fee Transmittal

Application Number:	17082877
Filing Date:	28-Oct-2020
Title of Invention:	CORE BARREL HEAD ASSEMBLY WITH AN INTEGRATED SAMPLE ORIENTATION TOOL AND SYSTEM FOR USING SAME
First Named Inventor/Applicant Name:	CHRISTOPHER L. DRENTH
Filer:	Joseph P. Anderson
Attorney Docket Number:	36362.0150U5

Filed as Large Entity

Filing Fees for Utility under 35 USC 111(a)

Description	Fee Code	Quantity	Amount	Sub-Total in USD($)
Basic Filing:				
Pages:				
Claims:				
Miscellaneous-Filing:				
Petition:				
Patent-Appeals-and-Interference:				
Post-Allowance-and-Post-Issuance:				
Extension-of-Time:				

Description	Fee Code	Quantity	Amount	Sub-Total in USD($)
Miscellaneous:				
STATUTORY OR TERMINAL DISCLAIMER	1814	1	170	170
		Total in USD ($)		**170**

Electronic Acknowledgement Receipt

EFS ID:	45579263
Application Number:	17082877
International Application Number:	
Confirmation Number:	1013
Title of Invention:	CORE BARREL HEAD ASSEMBLY WITH AN INTEGRATED SAMPLE ORIENTATION TOOL AND SYSTEM FOR USING SAME
First Named Inventor/Applicant Name:	CHRISTOPHER L. DRENTH
Customer Number:	23859
Filer:	Joseph P. Anderson
Filer Authorized By:	
Attorney Docket Number:	36362.0150U5
Receipt Date:	27-APR-2022
Filing Date:	28-OCT-2020
Time Stamp:	17:38:09
Application Type:	Utility under 35 USC 111(a)

Payment information:

Submitted with Payment	yes
Payment Type	CARD
Payment was successfully received in RAM	$170
RAM confirmation Number	E20224QH38300127
Deposit Account	
Authorized User	
The Director of the USPTO is hereby authorized to charge indicated fees and credit any overpayment as follows:	

File Listing:

Document Number	Document Description	File Name	File Size(Bytes)/ Message Digest	Multi Part /.zip	Pages (if appl.)
1	Terminal Disclaimer Filed	36362_0150U5_Terminal_Disclaimer.pdf	79978 69ea9d598fc225fe165cba6ecbf58ebde31da77b	no	1
Warnings:					
Information:					
2	Terminal Disclaimer Filed	36362_0150U5_Terminal_Disclaimer_GlobalTech.pdf	80935 7e81fc5977c4472ae5a5db324d61237b5b3d3bed	no	1
Warnings:					
Information:					
3	Fee Worksheet (SB06)	fee-info.pdf	37941 c7090b2ee54751bebadd4575c5370975e665546b	no	2
Warnings:					
Information:					
		Total Files Size (in bytes):	198854		

This Acknowledgement Receipt evidences receipt on the noted date by the USPTO of the indicated documents, characterized by the applicant, and including page counts, where applicable. It serves as evidence of receipt similar to a Post Card, as described in MPEP 503.

New Applications Under 35 U.S.C. 111
If a new application is being filed and the application includes the necessary components for a filing date (see 37 CFR 1.53(b)-(d) and MPEP 506), a Filing Receipt (37 CFR 1.54) will be issued in due course and the date shown on this Acknowledgement Receipt will establish the filing date of the application.
National Stage of an International Application under 35 U.S.C. 371
If a timely submission to enter the national stage of an international application is compliant with the conditions of 35 U.S.C. 371 and other applicable requirements a Form PCT/DO/EO/903 indicating acceptance of the application as a national stage submission under 35 U.S.C. 371 will be issued in addition to the Filing Receipt, in due course.
New International Application Filed with the USPTO as a Receiving Office
If a new international application is being filed and the international application includes the necessary components for an international filing date (see PCT Article 11 and MPEP 1810), a Notification of the International Application Number and of the International Filing Date (Form PCT/RO/105) will be issued in due course, subject to prescriptions concerning national security, and the date shown on this Acknowledgement Receipt will establish the international filing date of the application.

PTO/SB/06 (09-11)
Approved for use through 1/31/2014. OMB 0651-0032
U.S. Patent and Trademark Office; U.S. DEPARTMENT OF COMMERCE
Under the Paperwork Reduction Act of 1995, no persons are required to respond to a collection of information unless it displays a valid OMB control number.

PATENT APPLICATION FEE DETERMINATION RECORD Substitute for Form PTO-875	Application or Docket Number 17/082,877	Filing Date 10/28/2020	☐ To be Mailed

ENTITY: ☑ LARGE ☐ SMALL ☐ MICRO

APPLICATION AS FILED - PART I

FOR	(Column 1) NUMBER FILED	(Column 2) NUMBER EXTRA		RATE ($)	FEE ($)
☐ BASIC FEE (37 CFR 1.16(a), (b), or (c))	N/A	N/A		N/A	
☐ SEARCH FEE (37 CFR 1.16(k), (i), or (m))	N/A	N/A		N/A	
☐ EXAMINATION FEE (37 CFR 1.16(o), (p), or (q))	N/A	N/A		N/A	
TOTAL CLAIMS (37 CFR 1.16(i))	minus 20 =	*		x $100 =	
INDEPENDENT CLAIMS (37 CFR 1.16(h))	minus 3 =	*		x $480 =	
☐ APPLICATION SIZE FEE (37 CFR 1.16(s))	If the specification and drawings exceed 100 sheets of paper, the application size fee due is $310 ($155 for small entity) for each additional 50 sheets or fraction thereof. See 35 U.S.C. 41(a)(1)(G) and 37 CFR 1.16(s).				
☐ MULTIPLE DEPENDENT CLAIM PRESENT (37 CFR 1.16(j))					
* If the difference in column 1 is less than zero, enter "0" in column 2.				TOTAL	

APPLICATION AS AMENDED - PART II

AMENDMENT	04/27/2022	(Column 1) CLAIMS REMAINING AFTER AMENDMENT		(Column 2) HIGHEST NUMBER PREVIOUSLY PAID FOR	(Column 3) PRESENT EXTRA		RATE ($)	ADDITIONAL FEE ($)
	Total (37 CFR 1.16(i))	* 20	Minus	** 20	= 0		x $100 =	0
	Independent (37 CFR 1.16(h))	* 1	Minus	*** 3	= 0		x $480 =	0
	☐ Application Size Fee (37 CFR 1.16(s))							
	☐ FIRST PRESENTATION OF MULTIPLE DEPENDENT CLAIM (37 CFR 1.16(j))							
							TOTAL ADD'L FEE	0

AMENDMENT		(Column 1) CLAIMS REMAINING AFTER AMENDMENT		(Column 2) HIGHEST NUMBER PREVIOUSLY PAID FOR	(Column 3) PRESENT EXTRA		RATE ($)	ADDITIONAL FEE ($)
	Total (37 CFR 1.16(i))	*	Minus	**	=		x $0 =	
	Independent (37 CFR 1.16(h))	*	Minus	***	=		x $0 =	
	☐ Application Size Fee (37 CFR 1.16(s))							
	☐ FIRST PRESENTATION OF MULTIPLE DEPENDENT CLAIM (37 CFR 1.16(j))							
							TOTAL ADD'L FEE	

* If the entry in column 1 is less than the entry in column 2, write "0" in column 3.	SLIE
** If the "Highest Number Previously Paid For" IN THIS SPACE is less than 20, enter "20".	/FELICIA R FARMER/
*** If the "Highest Number Previously Paid For" IN THIS SPACE is less than 3, enter "3".	
The "Highest Number Previously Paid For" (Total or Independent) is the highest number found in the appropriate box in column 1.	

This collection of information is required by 37 CFR 1.16. The information is required to obtain or retain a benefit by the public which is to file (and by the USPTO to process) an application. Confidentiality is governed by 35 U.S.C. 122 and 37 CFR 1.14. This collection is estimated to take 12 minutes to complete, including gathering, preparing, and submitting the completed application form to the USPTO. Time will vary depending upon the individual case. Any comments on the amount of time you require to complete this form and/or suggestions for reducing this burden, should be sent to the Chief Information Officer, U.S. Patent and Trademark Office, U.S. Department of Commerce, P.O. Box 1450, Alexandria, VA 22313-1450. DO NOT SEND FEES OR COMPLETED FORMS TO THIS ADDRESS. **SEND TO: Commissioner for Patents, P.O. Box 1450, Alexandria, VA 22313-1450.**

If you need assistance in completing the form, call 1-800-PTO-9199 and select option 2.

PTO/SB/08a (07-09)
Approved for use through 11/30/2020. OMB 0651-0031
U.S. Patent and Trademark Office; U.S. DEPARTMENT OF COMMERCE
Under the Paperwork Reduction Act of 1995, no persons are required to respond to a collection of information unless it contains a valid OMB control number.

Substitute for form 1449/PTO

INFORMATION DISCLOSURE STATEMENT BY APPLICANT

(Use as many sheets as necessary)

Sheet	1	of	2

Complete if Known	
Application Number	17/082,877
Filing Date	October 28, 2020
First Named Inventor	Christopher L. Drenth
Art Unit	3676
Examiner Name	Not Yet Assigned
Attorney Docket Number	36362.0150U5

U. S. PATENT DOCUMENTS

Examiner Initials*	Cite No.[1]	Document Number Number-Kind Code[2] *(if known)*	Publication Date MM-DD-YYYY	Name of Patentee or Applicant of Cited Document	Pages, Columns, Lines, Where Relevant Passages or Relevant Figures Appear
	A	7,703,507	4-27-2010	Strickland	
	B	7,777,643	08-17-2010	Sun et al.	
	C	2012/0273272	11-01-2012	Borg	

FOREIGN PATENT DOCUMENTS

Examiner Initials*	Cite No.[1]	Foreign Patent Document Country Code[3] Number[4] Kind Code[5] *(if known)*	Publication Date MM-DD-YYYY	Name of Patentee or Applicant of Cited Document	Pages, Columns, Lines, Where Relevant Passages Or Relevant Figures Appear	T[6]
	A	WO2010091471A1	02-12-2010	Jacobs		
	B	WO2012012839A1	07-30-2010	Klass		
	C	AU 2009100636;	08-13-2009	Kleyn		
	D	CA 2456506	01-03-2005	Scott		

Examiner Signature		Date Considered	

*EXAMINER: Initial if reference considered, whether or not citation is in conformance with MPEP 609. Draw line through citation if not in conformance and not considered. Include copy of this form with next communication to applicant. [1] Applicant's unique citation designation number (optional). [2] See Kinds Codes of USPTO Patent Documents at www.uspto.gov or MPEP 901.04. [3] Enter Office that issued the document, by the two-letter code (WIPO Standard ST.3). [4] For Japanese patent documents, the indication of the year of the reign of the Emperor must precede the serial number of the patent document. [5] Kind of document by the appropriate symbols as indicated on the document under WIPO Standard ST.16 if possible. [6] Applicant is to place a check mark here if English language Translation is attached.

I hereby certify that this paper (along with any paper referred to as being attached or enclosed) is being transmitted via the Office electronic filing system in accordance with 37 C.F.R. § 1.6(a)(4).

Dated: April 18, 2022 Electronic Signature: /Benjamin D. Kirk/ (Benjamin D. Kirk)

PTO/SB/08b (07-09)
Approved for use through 11/30/2020. OMB 0651-0031
U.S. Patent and Trademark Office; U.S. DEPARTMENT OF COMMERCE
Under the Paperwork Reduction Act of 1995, no persons are required to respond to a collection of information unless it contains a valid OMB control number.

Substitute for form 1449/PTO

INFORMATION DISCLOSURE STATEMENT BY APPLICANT

(Use as many sheets as necessary)

Sheet	2	of	2

Complete if Known	
Application Number	17/082,877
Filing Date	October 28, 2020
First Named Inventor	Christopher L. Drenth
Art Unit	3676
Examiner Name	Not Yet Assigned
Attorney Docket Number	36362.0150U5

NON PATENT LITERATURE DOCUMENTS

Examiner Initials*	Cite No.[1]	Include name of the author (in CAPITAL LETTERS), title of the article (when appropriate), title of the item (book, magazine, journal, serial, symposium, catalog, etc.), date, page(s), volume-issue number(s), publisher, city and/or country where published.	T[2]
	A	Reflex EZ-TRAC Manual, published January 2009	
	B	Confirmation of Filing of Evidence in support of Opposition of Australian Patent No. 20190257536, by Imdex,Limited dated December 24, 2021	
	C	Declaration (First) of opposition of Australian Patent No. 20190257536 by Chris Brown, dated December 3, 2021	
	D	Declaration (Second) of opposition of Australian Patent No. 20190257536 by Chris Brown, dated December 22, 2021	
	E	Declaration of opposition of Australian Patent No. 20190257536 by James Barry Reilly, dated December 12, 2021	

Examiner Signature		Date Considered	

*EXAMINER: Initial if reference considered, whether or not citation is in conformance with MPEP 609. Draw line through citation if not in conformance and not considered. Include copy of this form with next communication to applicant.

[1] Applicant's unique citation designation number (optional). [2] Applicant is to place a check mark here if English language Translation is attached.

(12) INTERNATIONAL APPLICATION PUBLISHED UNDER THE PATENT COOPERATION TREATY (PCT)

(19) World Intellectual Property Organization
International Bureau

(43) International Publication Date
2 February 2012 (02.02.2012)

PCT

(10) International Publication Number
WO 2012/012839 A1

(51) International Patent Classification:
E21B 25/16 (2006.01) *E21B 47/02* (2006.01)

(21) International Application Number:
PCT/AU2011/000954

(22) International Filing Date:
29 July 2011 (29.07.2011)

(25) Filing Language: English

(26) Publication Language: English

(30) Priority Data:
2010903401 30 July 2010 (30.07.2010) AU

(71) Applicant *(for all designated States except US)*: **GLOBALTECH CORPORATION PTY LTD** [AU/AU]; 1/48 Vinnicombe Drive, Canning Vale, Western Australia 6155 (AU).

(72) Inventors; and
(75) Inventors/Applicants *(for US only)*: **KLASS, Michael, Alan** [AU/AU]; 37 Raine Terrace, Winthrop, Western Australia 6150 (AU). **WILKINSON, Brett, James** [AU/AU]; 17 Quorn Street, Wembley Downs, Western Australia 6019 (AU). **STEWART, Gordon, Henderson** [AU/AU]; 18 Airlie Street, Claremont, Western Australia 6010 (AU). **HEJLEH, Khaled, Mufid, Yousef** [AU/AU]; 34A Leake Street, Peppermint Grove, Western Australia 6011 (AU). **ANWAR, Johan** [AU/AU]; 20 Prospect Crescent, Kalamunda, Western Australia 6076 (AU).

(74) Agent: **WATERMARK PATENT & TRADE MARKS ATTORNEYS**; Level 2, 302 Burwood Road, Hawthorn, Victoria 3122 (AU).

(81) Designated States *(unless otherwise indicated, for every kind of national protection available)*: AE, AG, AL, AM, AO, AT, AU, AZ, BA, BB, BG, BH, BR, BW, BY, BZ, CA, CH, CL, CN, CO, CR, CU, CZ, DE, DK, DM, DO, DZ, EC, EE, EG, ES, FI, GB, GD, GE, GH, GM, GT, HN, HR, HU, ID, IL, IN, IS, JP, KE, KG, KM, KN, KP, KR, KZ, LA, LC, LK, LR, LS, LT, LU, LY, MA, MD, ME, MG, MK, MN, MW, MX, MY, MZ, NA, NG, NI, NO, NZ, OM, PE, PG, PH, PL, PT, RO, RS, RU, SC, SD, SE, SG, SK, SL, SM, ST, SV, SY, TH, TJ, TM, TN, TR, TT, TZ, UA, UG, US, UZ, VC, VN, ZA, ZM, ZW.

(84) Designated States *(unless otherwise indicated, for every kind of regional protection available)*: ARIPO (BW, GH, GM, KE, LR, LS, MW, MZ, NA, SD, SL, SZ, TZ, UG, ZM, ZW), Eurasian (AM, AZ, BY, KG, KZ, MD, RU, TJ, TM), European (AL, AT, BE, BG, CH, CY, CZ, DE, DK, EE, ES, FI, FR, GB, GR, HR, HU, IE, IS, IT, LT, LU, LV, MC, MK, MT, NL, NO, PL, PT, RO, RS, SE, SI, SK, SM, TR), OAPI (BF, BJ, CF, CG, CI, CM, GA, GN, GQ, GW, ML, MR, NE, SN, TD, TG).

Published:
— *with international search report (Art. 21(3))*

(54) Title: CORE SAMPLE ORIENTATION SYSTEM, DEVICE AND METHOD

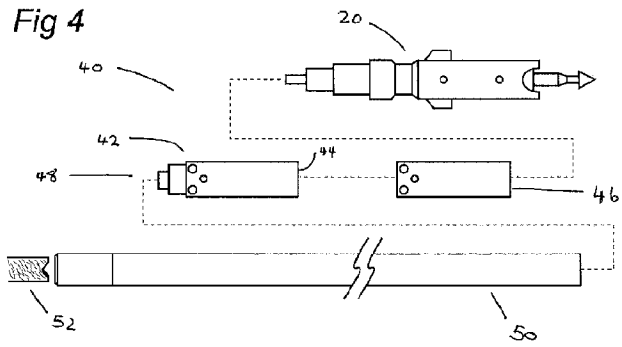

(57) Abstract: A core sample orientation system is configured to provide an indication of the orientation of a core sample relative to a body of material from which the core has been recovered. A hermetically sealed core sample orientation data gathering device (42) is deployable as part of a downhole core sample assembly, the device including communication means arranged to communicate obtained core sample orientation data to a remote orientation data indication display device (60) having an orientation data display. The data gathering device can have visual indicators (74, 76), such as LED lights, which may light a reflector (86) to emit the indicating light through one or more apertures (84) in a sidewall of the assembly. Also disclosed is a method of obtaining core sample orientation data includes deploying a core sample orientation data gathering device as part of a core sample gathering system, obtaining a core sample from a subsurface body of material using the orientation data gathering device, using the orientation data gathering device to determine the orientation of the core sample relative to the subsurface body of material, and using a remote communication device to obtain from said orientation data gathering device data relating to the orientation of the core sample.

WO 2012/012839 A1

CORE SAMPLE ORIENTATION SYSTEM, DEVICE AND METHOD

TECHNICAL FIELD

The present invention relates to a system, device and method for use in determining the orientation of a core sample relative to a body of material from which the core sample has been obtained.

BACKGROUND

Core orientation is the process of obtaining and marking the orientation of a core sample from a drilling operation. The orientation of the sample is determined with regard to its original position in a body of material, such as rock or ore deposits underground.

Core orientation is recorded during drilling, and analysis is undertaken during core logging. The core logging process requires the use of systems to measure the angles of the geological features, such as an integrated core logging system.

Whilst depth and azimuth are used as important indicators of core position, they are generally inadequate on their own to determine the original position and attitude of subsurface geological features. Core orientation i.e. which side of the core was facing the bottom (or top) of a borehole and rotational orientation compared to surrounding material, enables such details to be determined.

Through core orientation, it is possible to understand the geology of a subsurface region and from that make strategic decisions on future mining or drilling operations, such as economic feasibility, predicted ore body volume, and layout planning. In the construction industry, core orientation can reveal geological features that may affect siting or structural foundations for buildings

Core samples are cylindrical in shape, typically around 3 metres long, and are obtained by drilling with an annular hollow core drill into subsurface material, such as sediment and rock, and recoverying the core sample. A diamond tipped dril bit is used at the end of the hollow drill string. As the drill progresses deeper, more sections of hollow steel drill tube are added to extend the drill string. An inner tube assembly captures the core sample. This inner tube assembly

remains stationary while the outer tubes rotate with the drill bit. Thus, the core sample is pushed into the inner tube.

A 'back end' assembly connects to a greaser. This greaser lubricates the back end assembly which rotates with the outer casing while the greaser remains stationary with the inner tubing.

Once a core sample is cut, the inner tube assembly is recovered by winching to the surface. After removal of the back end assembly from the inner tube assembly, the core sample is recovered and catalogued for analysis.

Various core orientation systems have previously been used or proposed. Traditional systems use a spear and clay impression arrangement where a spear is thrown down the drill string and makes an impression in clay material at an upper end of the core sample. This impression can be used to vindicate the orientation of the core at the time and position the spear impacted the clay.

A more recent system of determining core oprientation is proposed in Australian patent number 2006100113 (also as US patent number 7,584,055). This patent document describes a core orientation device for a core drill. The device provides signals associated with a physical orientation of a core orientation device for a particular moment in time. The device includes a memory for storing and providing the orientation data when required. The system described in AU 2006100113 provides a two unit replacement for the greaser described above. A first orientation system unit houses electronics and a battery used to record orientation data, and the second greaser unit is an extended greaser accommodating a physical screw on connector for the first unit as well as serving as the greaser. This combination forms part of the inner tube assembly with the core tube, orientation system 'first' unit and the connector/greaser 'second' unit. However, as a result of the now extended length of the combined orientation system and greaser units compared with a standard greaser only unit, the outer drill string casing now requires a matching extension piece to extend the outer casing an equal amount. The core orientation system has a display on one face which is used when setting up the unit prior to deployment, and to indicate core sample alignment when the core sample is recovered. At the surface before removing the core sample from the inner tube assembly, the operator views the display fitted on the system. The display indicates for the operator to rotate the

unit and the sample within the tube until the whole core tube and sample is oriented with the lower section of the core sample at the lower end of the tube. The core sample is marked (usually by pencil) before being removed from the core for future analysis.

However, the device described in AU 2006100113 has been found to have certain limitations. The orientation unit is connected to the greaser by a screw thread and o-ring seal arrangement. In the harsh down hole environment within the drill string, it has been realised that the o-ring seals are not always effective and can let fluid into the space between the orientation unit and the greaser. The display unit allows fluid into the electronics of the orientation, resulting in a risk of fault or failure of the device. Furthermore, the orientation unit must be disassembled from the greaser unit before the display and orientation unit can be viewed, rotated and the required core orientation displayed. Thus, the device of AU 2006100113 requires manual manipulation before any reading can be viewed on the display, if the display and the electronics have survived any ingress of fluid past the o-ring seal.

It has therefore been found desirable to provide an improved core orientation system, device and method that alleviates these problems whilst facilitating more reliable data recovery.

SUMMARY OF THE INVENTION

With the aforementioned in view, in one aspect the present invention provides a core sample orientation system configured to provide an indication of the orientation of a core sample relative to a body of material from which the core has been recovered, the system including a hermetically sealed core sample orientation data gathering device deployable as part of a downhole core sample assembly, the device including communication means arranged to communicate obtained core sample orientation data to a remote orientation data indication display device having an orientation data display.

A further aspect of the present invention provides a hermetically sealed core sample orientation data gathering device when deployed as part of a core sample orientation system for providing an indication of the orientation of a core sample relative to a body of material from which the core has been extracted, the

orientation data gathering device including communication means for providing core sample orientation data to a remote orientation data electronic device having an orientation data display.

Thus, the orientation data gathering device of the present system being hermetically sealed avoids risk of ingress of liquid when the downhole, thereby leading to more reliable data gathering operations without the need to recover the device prematurely in order to repair or replace a faulty device, or risk completing a core sampling operation but find at the surface that no data can be recovered and the core orientation cannot be accurately determined.

The orientation data gathering device may be connected to a standard greaser unit, thereby allowing known equipment to be used and avoiding the need for specialised greaser to be adopted. Because the orientation data gathering device is hermetically sealed to ensure no liquid gets in to the device when deployed downhole, and the device has communication means to send data signals to a remote display, no o-ring seal to the greaser is required. This saves on unreliable o-ring seals, reduces risk of damage through water ingress and loss of data, as well as the time saved in not having to recover the damaged device and redeploy a replacement.

The system may further include timer means to commence multiple time intervals for the device to obtain orientation data. A time interval may be synchronised at an orientation reading time and the time interval related to a predetermined time interval. This may be achieved by use of the remote orientation data electronic communication device.

System start up, setup, stop and data recovery functions may be carried out using the remote orientation data electronic communication device to operate the orientation data gathering device.

The orientation data gathering device may have one or more visual indicators to show an operator one or more required directions of rotation of a recovered core sample assembly for determining orientation of the core sample, and once a required core sample orientation has been established, the remote orientation data electronic communication device may interrogate the orientation data gathering device to obtain orientation data.

Communication between the orientation data gathering device and the remote orientation data electronic communication device is by wireless communication, such as infra red communication.

The remote orientation data electronic communication device may include a display to show visual information relating to the obtained orientation data, such as an indication that sufficient data has been obtained, that the data is correctly and safely stored and/or that data has been transferred from the orientation data gathering device to the remote orientation data electronic communication device.

The orientation data gathering device may include one or more visual and/or audible indicators relating to a direction of rotation of the device when determining core sample orientation and/or when a required core sample orientation has been determined. For example, illuminated indicators may be provided on the device, such as on an end of the exposed when the greaser is removed. A particular colour, number of lights or direction indication may illuminate to indicate that the device and the core sample need rotating in one direction, and a different colour, number of lights or direction indication may illuminate to show an opposite rotation direction is needed. These may be augmented by or replaced by audible indications, such as respective numbers of 'bleeps'. An illuminated and/or audible indication may be given when a required core sample orientation is achieved. For example, both direction lights or audible signals may be given at the same time.

The remote orientation data communication device may also give an indication of the required direction of rotation and/or required core sample orientation.

The remote orientation data communication device may include or be a handheld unit. This unit may include a battery for power, which may be a rechargeable battery.

A further aspect of the present invention provides a method of obtaining core sample orientation data, the method including:

a) deploying a core sample orientation data gathering device as part of a core sample gathering system;

b) obtaining a core sample from a subsurface body of material using the apparatus;

c) using the orientation data gathering device to determine the orientation of the core sample relative to the subsurface body of material; and

d) using a remote communication device to obtain from said orientation data gathering device data relating to the orientation of the core sample.

The method may further include hermetically sealing the core sample orientation data gathering device prior to deployment.

Following recovery of the device, core orientation indications may be given by one or more illuminated and/or audible indications. Coloured indications may be used to determine a required orientation of the core sample. For example, the orientation data gathering device may include lights, such as LEDs, whereby an indication is given to rotate the core sample in a first direction or in a second opposite direction to obtain a required core sample orientation position, or lights may be used to indicate when a required orientation position has been obtained.

The method may include deploying the orientation data gathering device leading a greaser. The greaser device may preferably be a standard greaser.

Multiple time intervals may be measured by the device. These time intervals can be used to determine data gathering events, such as position, magnetic flux, gravity, velocity etc. A time interval can be synchronised to a specific downhole data gathering event.

Data may be obtained from the orientation data gathering device by communication with a remote device, such as by an infra red link or other wireless communication, such as radio link, between the orientation data gathering device and an orientation data communication device.

A data gathering device according to one or more forms of the present invention does not continuously take 'core orientation' readings while in use. Instead, such a device determines when the device is 'motionless' (through its in-built firmware algorithms and sensors) before taking orientation readings. This arrangement of orientation recording confirms that the device only records valid data, i.e. while motionless, as the in-built sensors would otherwise present faulty or indeterminate readings.

If an operator erroneously selects a time interval for 'core orientation' (via the handheld unit while the data gathering device is still in motion), after retrieving the core sample, algorithms programmed into the device will determine the 'best-approximate' time interval relative to the device being 'steady' or 'motionless' at a time before or after a time selection by the operator using a hand held unit to communicate with the device as part of an embodiment of the system. The event and time difference will also be reported to the operator to confirm acceptance of that recorded data.

After core retrieval, the data gathering device provides an indication, using one or more light emitting diodes (LEDs), used to determine correct orientation of the core sample after rotating the device and core tube assembly in either direction (no indication of left or right direction is required). The LEDs do not necessarily indicate direction, but provides 'multi-level-speed' LED flashing rates, followed by a steady ON state LED illumination to determine correct core orientation.

According to one or more embodiments of the present invention, before inserting the down-hole data gathering device into a drill hole, and after retrieving the same unit with the obtained core sample, the wireless handheld unit can start/stop or interrogate the down-hole device without having to remove or unscrew the unit from the drill-string or core tube sections. The handheld unit does not need to be attached, screwed in, mounted to or wedged to any part of the tubing or GCOU assembly during any operation).

Start/stop operations, setting the exact time for orientation, interrogating and recording 'confirmed-accurate' operator orientation procedure, may all be performed using a remote wireless hand-held unit communicating with the data gathering device unit that was down the drill hole.

Visual indication of core sample orientation may be provided through at least one aperture in a sidewall of a section of a downhole assembly. Core sample orientation indications may be as light through at least one aperture in the sidewall of a section of the downhole assembly, such as a greaser unit. Core sample orientation visual indications may be provided from one or more light emitters via at least one light reflector, and preferably reflecting that emitted light out through the at least one aperture.

BRIEF DESCRIPTION OF THE DRAWINGS

Figures 1 and 2 show features of a known core sample orientation system.

Figures 3 and 4 show features of an arrangement of a core sample orientation system according to an embodiment of the present invention.

Figure 5 shows a core sample orientation data gathering device according to an embodiment of the present invention.

Figure 6 shows a hand held device for interrogating the core sample orientation data gathering device according to an embodiment of the present invention.

Figure 7 shows an indicator window end of a core sample orientation device according to an embodiment of the present invention wherethrough indicator lights can show when illuminated.

Figures 8a and 8b show an alternative embodiment of a data gathering device of the present invention.

DESCRIPTION OF PREFERRED EMBODIMENTS

In figures 1 and 2, a known prior art inner tube assembly 10 replaces a standard greaser with a two unit system 14,16 utilising a specialised greaser unit 14 and electronics unit 16 particular to the two unit system. The electronics unit is sealed to the greaser unit by o-rings, which have a tendency to fail in use and allow liquid into the electronics unit, risking loss of data and/or display failure. The electronics unit has an LCD display 18 at one end. This allows for setting up of the system prior to deployment and to indicate visually alignment of the core sample when retrieved to the surface. The greaser unit is connected to a backend assembly 20 and the electronics unit 16 is connected to a sample tube 22 for receiving a core sample 24. The electronics unit is arranged to record orientation data every few seconds during core sampling. The start time is synchronised with actual time using a common stop watch. The units are then lowered into the drill string outer casing to commence core sampling. After drilling and capturing a core sample in the inner core sample tube, the operator stops the stop watch and retrieves the core sample tube back to the surface. At the surface, before removing the core sample from the inner tube, the operator views the LCD display 18, if it is still working, which steps the operator through

instructions to rotate the core tube 22 until the core sample 24 lower section is at the core tube lower end 26 . The core sample is then marked and stored for future analysis.

Referring to figure 2, the known electronics unit 16 of figure 1 includes accelerometers 28, a memory 30, a timer 32 and the aforementioned display 18.

The system 40 according to an embodiment of the present invention will hereinafter be described with reference to figures 3 to 6.

An outer drilling tube 34 consisting of connectable hollow steel tubes 34a-n has an extension piece 36 connected inline between two adjacent tubes in order to compensate the length of the outer drilling tube in relation to the additional length gained by the inner tube assembly 40 due to the core sample orientation data gathering device 42.

The core sample orientation data gathering device 42 is a fully sealed cylindrical unit with screw threads at either end. A first end 44 connects to a standard length and size greaser unit 46 and a second end 48 connects to a core sample tube 50. The greaser unit connects to a standard backend assembly 20.

There are no LCD display panels, indicators or switches mounted on the device. LED indicators are provided at one end 44, the greaser end, that are used in determining correct orientation of the core sample once the core and the device are recovered back a the surface. Figure 7 shows an example of the indicator end 44 of the core sample orientation data gathering device 42.

In figure 5, the core sample orientation data gathering device 42 is shown in close up. The end 44 for connecting to the greaser unit 46 includes a window (not shown in figure 5 - see figure 7). One or more LED lights are provided sealed within the device 42 behind the window. A coloured light indication is given to indicate which way (clockwise or anti-clockwise) the device 42 must be rotated to obtain a desired orientation of the core sample still within the inner tube assembly that is connected to the core sample orientation data gathering device 42. For example, a red light may be given to indicate to rotate the device (and thus the core sample) anticlockwise or to the left, and a green light may be given to indicate to rotate the device clockwise or to the right. A combined red and green indication, or a white light indication, or other indication can be given, such

as flashing lights, to indicate that the core sample is correctly orientated and ready for marking.

Figure 6 shows an embodiment of the hand held device 60 which receives wirelessly receives data or signals from the core sample orientation data gathering device 42. The core sample orientation data gathering device 42 includes a transmitter which can use line of sight data transfer through the window, such as by infra red data transfer, or a wireless radio transmission. The communication device 60 can store the signals or data received from the core sample orientation data gathering device 42. The communication device 60 includes a display 62 and navigation buttons 64,66, and a data accept/confirmation button 68. Also, the hand held device is protected from impact or heavy use by a shock and water resistant coating or casing 70 incorporating protective corners of a rubberised material.

Setting up of the device is carried out before insertion into the drill hole. Data retrieval is carried out by infra red communication between the core sample orientation data gathering device 42 and a core orientation data receiver (see figure 6) or communication device 60. After recovering the core sample inner tube back at the surface, and before removing the core sample from the tube, the operator removes the 'back end assembly, and the attached greaser unit. The operator then uses the remote communication device to obtain orientation data from the core sample orientation data gathering device using an line of sight wireless infra red communication between the remote device and the core sample orientation data gathering device. However, it will be appreciated that communication of data between the core sample orientation data gathering device 42 and the communication device 60 may be by other wireless means, such as by radio transmission.

The whole inner tube 50, core sample 52 and core sample orientation data gathering device 42 are rotated as necessary to determine a required orientation of the core sample. The indicators on the greaser end of the core sample orientation data gathering device 42 indicate to the operator which direction, clockwise or anti-clockwise, to rotate the core sample. One colour of indicator is used to indicate clockwise rotation and another colour to indicate anti-clockwise rotation is required. This is carried out until the core sample is orientated with its

lower section at the lower end of the tube. The core sample is then marked for correct orientation and then used for analysis.

As shown in figure 7, the indicator window end 44 of the core sample orientation data gathering device 42 includes a window 72. The indicator lights can be seen through this window at least when illuminated. In this embodiment, two lights, red and green LEDs are shown. The left hand 74 (red) LED illuminates to indicate to a user to rotate the device 42 anti-clockwise. The right hand 76 (green) LED illuminates to indicate to a user to rotate the device 42 anti-clockwise. When correct core sample orientation is achieved, both LEDs might illuminate, such as steady or flashing red and green, or another illuminated indication might be given, such as a white light (steady or flashing).

The visual and/or audible indicators, under certain site and/or environmental conditions, may not be sufficiently visible or audible. They may be hard to see in bright light conditions or hard to hear in loud working environments. Thus, an additional or alternative means and/or method may be utilised to ensure that the core sample has been correctly orientated. The outer casing or body or an end of the core sample data gathering device 42 may have angular degree marks. These may be scribed, etched, machined, moulded or otherwise provided, such as by printing or painting, on the device 42. For example, as shown in figure 7 dashes equally spaced around the outside parameter (each representing one or more angular degrees of the full circle or perimeter). Further scribing of a number every five dashes starting with the number "0" then 5, 10, 15 etc. until 355. When the core is retrieved and the orientation device communicates with the hand held communicator 60, additional information is transmitted from the orientation device to the communicator 60, such as a number between Zero and 359 (inclusive) denoting an angular degree of rotation of the core sample orientation data gathering device and the core sample. When the core is oriented during one or more embodiments of the method of the present invention, scribing on the core sample orientation data gathering device 42 number on the top side should be the same as the number transmitted to the communicator 60, which re-confirms correct orientation. Thus, if the visual or audible means for indicating core orientation are not useful or available, then the core is oriented using the angular degree arrangement (top side) to match the

number transmitted, and then this would be audited using the communicator 60 as is the case now.

The core sample orientation data gathering device of the present invention is hermetically sealed against ingress of water or other liquids, even at operative borehole depths and conditions. No additional or alternative sealing, such as separate o-ring seals between the greaser and core sample orientation data gathering device or between the inner core tube and the core sample orientation data gathering device are required. Thus, maintenance or risk of ingress of liquid are not of concern.

Additionally, only the greaser needs to be separated from the core sample orientation data gathering device in order to obtain access and communicate with the device to obtain core orientation data. Likewise, setup prior to deployment is improved in terms of time and ease of use by not requiring a specialised back end assembly, rather, a standard greaser and back end assembly is used. This also improves compatibility with standard systems.

Obtaining core orientation is made easier by only requiring two colours lights to indicate one or other direction of rotation to establish correct core orientation prior to marking. The indicators form part of the sealed device and can be low power consumption LED lights. Alternatively, flashing lights may be used. For example, a certain frequency or number of flashes for one direction and another frequency or number of flashes for the other direction of rotation. A steady light could be given when correct orientation is achieved.

Confirmed correct core alignment is registered in the remote communication device 60. This provides for an audit trail, and the data can be readily transferred to computer for analysis and manipulation. This also provides reassurance of accuracy of sampling and orientation to operators, geologists and exploration/mining/construction companies.

In use, the core inner tube 50, data gathering device 42 and greaser 46 are connected together in that order and lowered into a core sampling outer tube having an annular diamond drill bit at the furthest end. Once a core sample is obtained, the inner tube assembly with the data gathering device and greaser are recovered back to the surface, the back end assembly 20 and greaser are removed. Using an infra red link or other wireless link, the data gathering device

is put into orientation indicating mode by the remote communication device 60. The core sample and data gathering device are then rotated either clockwise or anti clockwise to establish a required orientation position. The remote communication device is then used to communicate with the data gathering device to obtain core sample orientation data from the data gathering device. No LCD or other display is needed on the data gathering device that might otherwise risk leakage in use and ingress of liquid or failure of the display due to display power demands on the limited battery life or display failure due to the harsh environment downhole. The required orientation of the core sample is then marked and the core sample can be stored and used for future analysis. The received data can be transferred to a computer for analysis.

According to an alternative embodiment of the present invention shown in figures 8a and 8b, a data gathering device 80 houses the light emitters 74,76. Light from these emitters (e.g. LEDs) passes through the window 72 (shown in figure 7). Reference arrow A refers to the drill bit end direction, and reference arrow B refers to the backend assembly direction. An optical adapter 82 is provided at the end 42 of the device and which adapter extends into the greaser unit 46 when connected thereto. The optical adapter has a reflective material. The greaser unit 46 has apertures 84 that allow light therethrough. Light from the emitters is directed onto at least one reflector 86 of the adapter. The emitted and reflected light can be observed through the apertures 84 in the greaser. It will be appreciated that the adapter need not extend into a greaser. A tube section or other component having at least one aperture to observe the light through is sufficient. The red-green indications (or whatever selected colour combination of light is used) can be observed through the aperture(s) when rotating the device to obtain core sample orientation. Thus, advantageously, when the data gathering device and core sample are recovered from down the hole, the data gathering device need not be separated from the greaser in order to determine a required orientation of the core sample. Wireless communication to a remote device, such as a hand held device, to transfer data between the data gathering device and the remote device, can also be effected by transmitting through the at least one aperture.

Embodiments of the present invention provide the advantage of a fully operating downhole tool/device without having to disconnect or disassemble any part of the tool/device from the inner tube and/or from the backend assembly or any other part of the drilling assembly that the tool/device would need to be assembled within for its normal operation. Disconnecting or disassembling the tool/device from the backend and/or inner tube risks failure of seals at those connections and/or risks cross threading of the joining thread. Also, because those sections are threaded together with high force, it takes substantial manual force and large equipment to separate the sections. High surrounding pressure in the drill hole means that the connecting seals between sections must function perfectly otherwise water and dirt may ingress into and damage the device. Having a tool/device that does not need to be separated from the inner tube and/or backend sections in order to determine core sample orientation and/or to gather data recorded by the device/tool means that there is less risk of equipment failure and drilling downtime, as well as reduced equipment handling time through not having to separate the sections in order to otherwise obtain core sample orientation. Known systems require end on interrogation of the device/tool. By providing a sealed device/tool and the facility to determine orientation of the core sample, by observing the orientation indications through one or more apertures in the side of the greaser or other section, reliability and efficiency of core sample collection and orientating is improved. Consequently operational personnel risk injury, as well as additional downtime of the drilling operation. Without having to separate the tool/device from the inner tube and/or backend, the orientation of the core sample can be determined and the gathered information retrieved with less drilling delay and risk of equipment damage/failure.

CLAIMS:

1. A core sample orientation system configured to provide an indication of the orientation of a core sample relative to a body of material from which the core has been recovered, the system including a hermetically sealed core sample orientation data gathering device deployable as part of a downhole core sample assembly, the device including communication means arranged to communicate obtained core sample orientation data to a remote orientation data indication display device having an orientation data display.

2. A system as claimed in claim 1, including a connector arranged to releasably connect to a corresponding connector on a typical greaser.

3. A system according to claim 2, wherein the connector on the device is a screw thread arranged to threadingly engage with a corresponding screw thread of the greaser.

4. A system according to any one of the preceding claims, the data gathering device including one or more visual and/or audible indicators for indicating orientation of the core sample.

5. A system according to claim 4, wherein the indicators include colour light indicators.

6. A system according to claim 4, wherein the visual indicators are angular degree markings on an outer casing and/or end of the data gathering device.

7. A system according to any one of the preceding claims, including timing means to, in use, provide multiple time intervals for the device to obtain orientation data.

8. A system according to any one of the preceding claims, including the orientation data electronic communication device arranged to provide start up,

setup, stop and/or data recovery communication to operate the orientation data gathering device.

9. A system according to any one of the preceding claims, the orientation data gathering device and the remote orientation data electronic communication device being configured for wireless communication with each other.

10. A system according to claim 9, wherein the communication is by infra red communication.

11. A system according to any one of the preceding claims, wherein the orientation data gathering device includes a transmitter to transmit data to a remote device.

12. A system according to any one of the preceding claims, wherein the remote orientation data electronic communication device includes a display to show visual information relating to the obtained orientation data.

13. A system according to claim 12, wherein the visual display includes an indication that sufficient data has been obtained, that the data is correctly and safely stored and/or that data has been transferred from the orientation data gathering device to the remote orientation data electronic communication device.

14. A system according to any one of the preceding claims, the data gathering device including a light transmitter configured to direct light from at least one light emitter through at least one aperture of a section of a downhole assembly.

15. A system according to claim 14, wherein the at least one aperture is through a sidewall of a greaser unit connected to the data gathering device.

16. A system according to claim 14 or 15, wherein the light transmitter includes at least one light reflector arranged to redirect light from the at least one light emitter within the data gathering device through the at least one aperture.

17. A system according to claim 16, wherein the light reflector is provided on an extension portion from an end of the data gathering device to extend into an open end of the section to which the data gathering device is to connect.

18. A core sample orientation data gathering device as defined in any one of the preceding claims

19. A core sample orientation data gathering device deployable as part of a core sample orientation system according to any one of the preceding claims.

20. A core sample orientation data gathering device according to claim 18 or 19, including a hermetically sealed core sample orientation data gathering device deployable as part of a downhole core sample assembly, the device including communication means arranged to communicate obtained core sample orientation data to a remote orientation data indication display device having an orientation data display.

21. A method of obtaining core sample orientation data, the method including:

a) deploying a core sample orientation data gathering device as part of a core sample gathering system;

b) obtaining a core sample from a subsurface body of material using the orientation data gathering device;

c) using the orientation data gathering device to determine the orientation of the core sample relative to the subsurface body of material; and

d) using a remote communication device to obtain from said orientation data gathering device data relating to the orientation of the core sample.

22. A method according to claim 21, including hermetically sealing the core sample orientation data gathering device prior to deployment.

23. A method according to claim 22, including, following recovery of the device, obtaining core orientation indications by one or more illuminated and/or audible indications on the device.

24. A method according to claim 23, whereby coloured illuminated indications used to determine a required orientation of the core sample.

25. A method acording to any one of claims 21 to 24, including synchronising a time interval to a specific downhole data gathering event.

26. A method acording to any one of claims 21 to 25, including transferring core sample orientation data from the orientation data gathering device by wireless communication with the remote communication device.

27. A method according to claim 26, where the transfer of data is achieved by infra red communication between the orientation data gathering device and the orientation data communication device.

28. A method according to any one of claims 21 to 27, including providing a visual indication of core sample orientation through at least one aperture in a sidewall of a section of a downhole assembly.

29. A method according to claim 28, including transmitting core sample orientation indications as light through at least one aperture in the sidewall.

30. A method according to claim 28 or 29, including emitting core sample orientation visual indications from one or more light emitters via at least one light reflector, and reflecting that emitted light out through the at least one aperture.

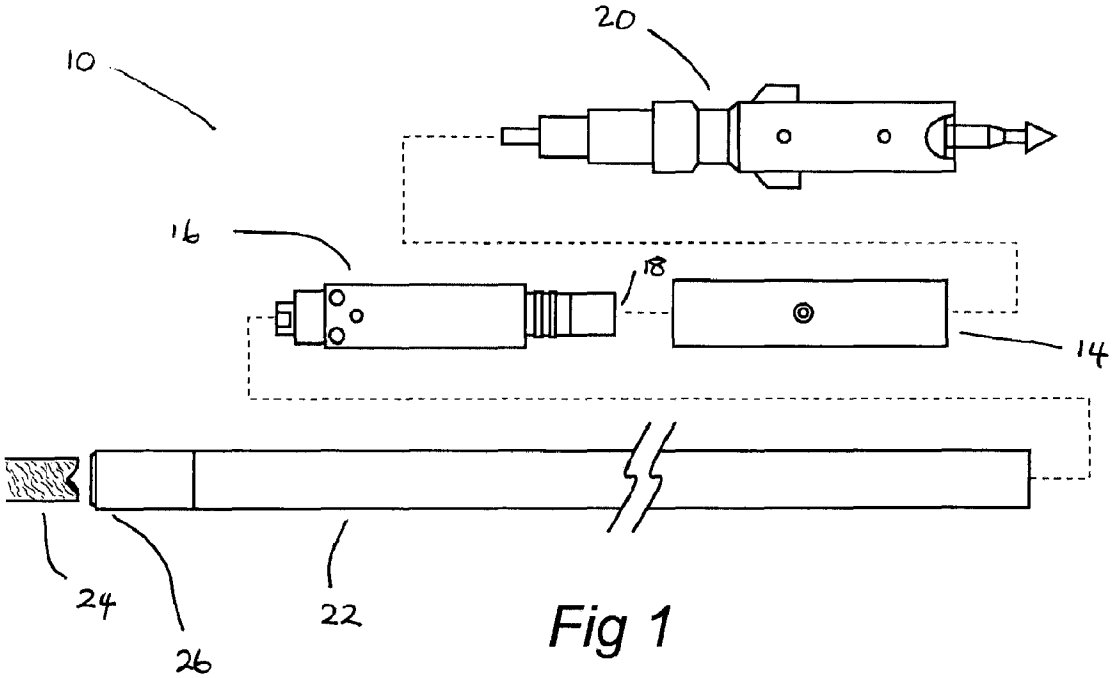

Fig 1

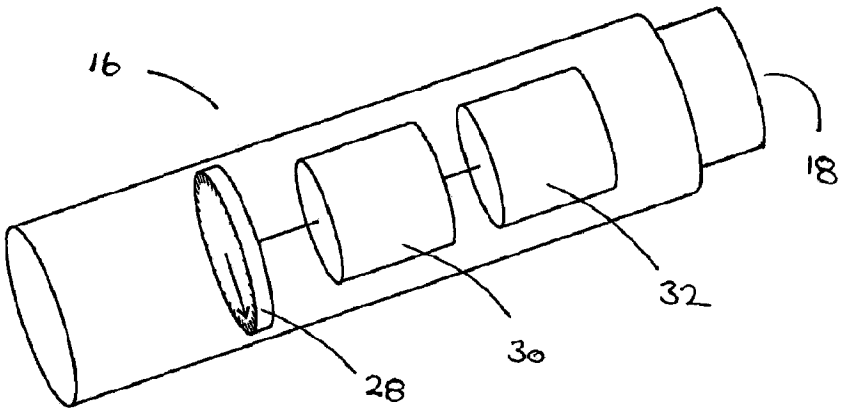

Fig 2

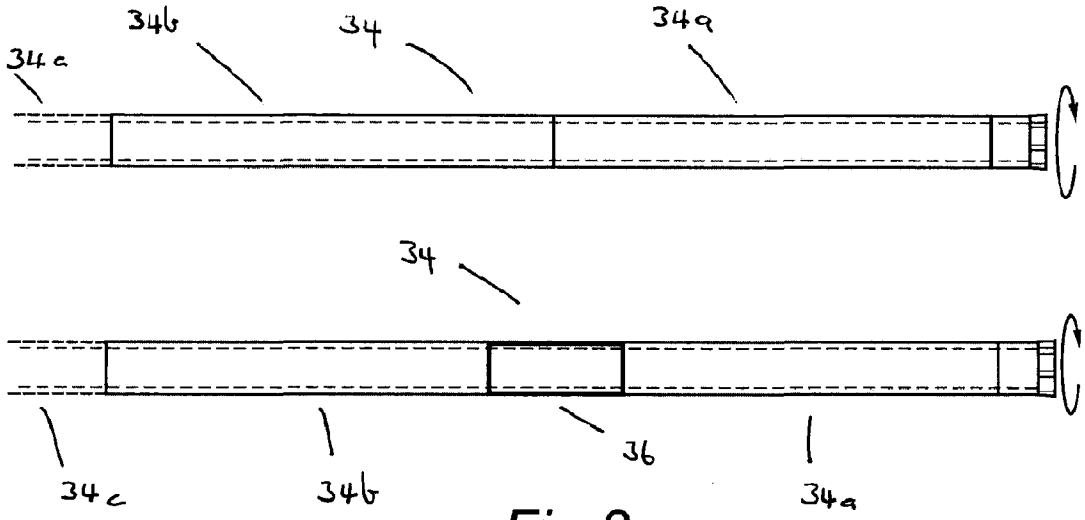

Fig 3

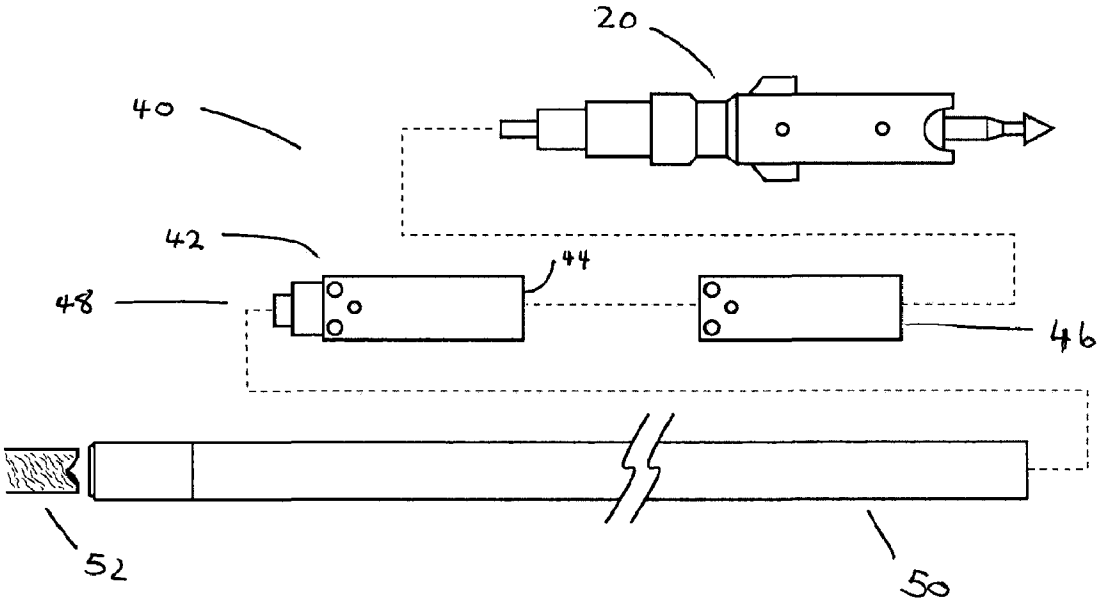

Fig 4

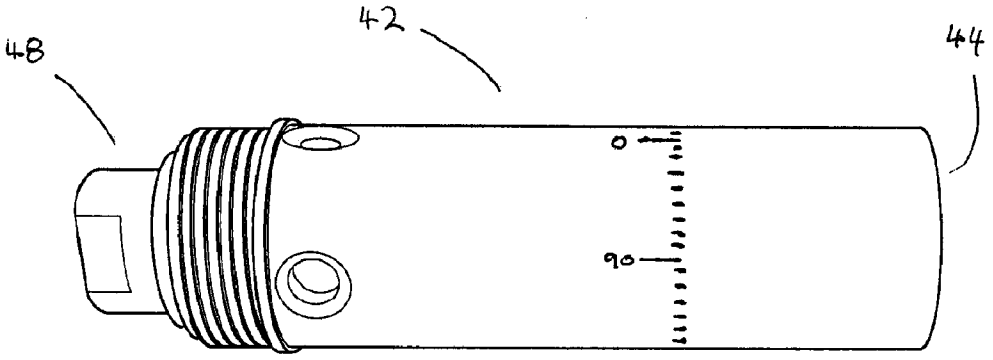

Fig 5

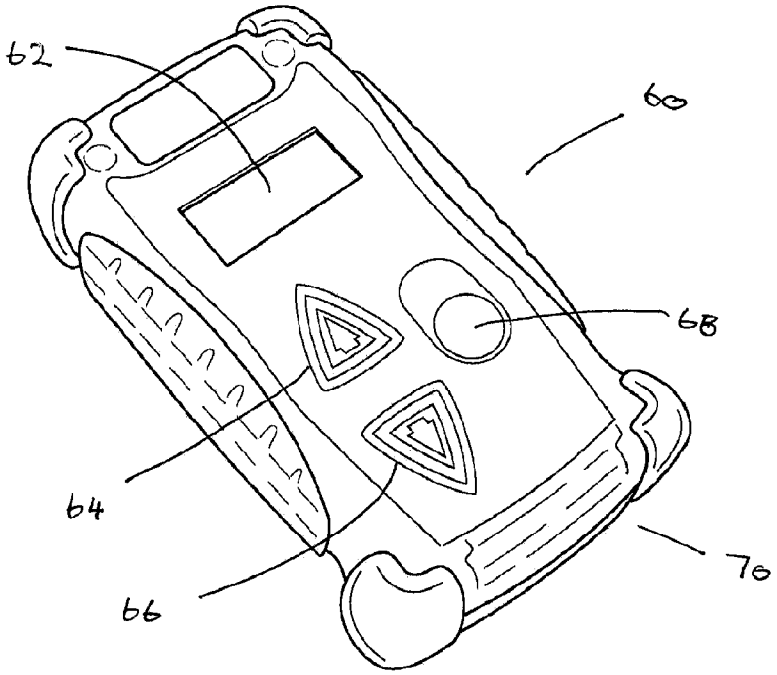

Fig 6

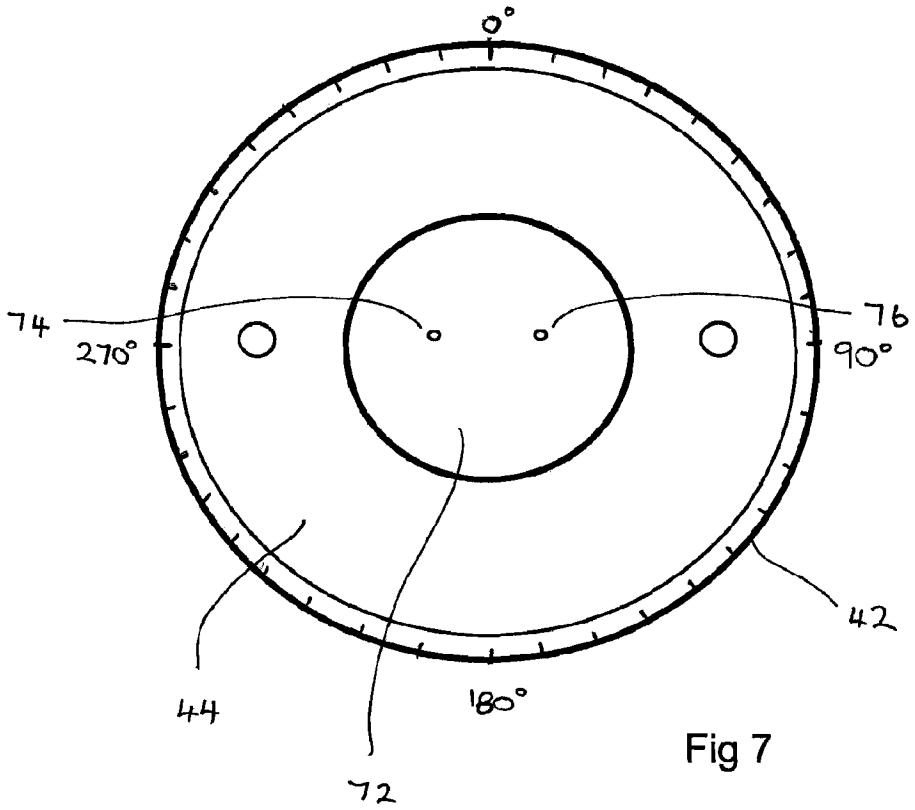

Fig 7

Fig 8a

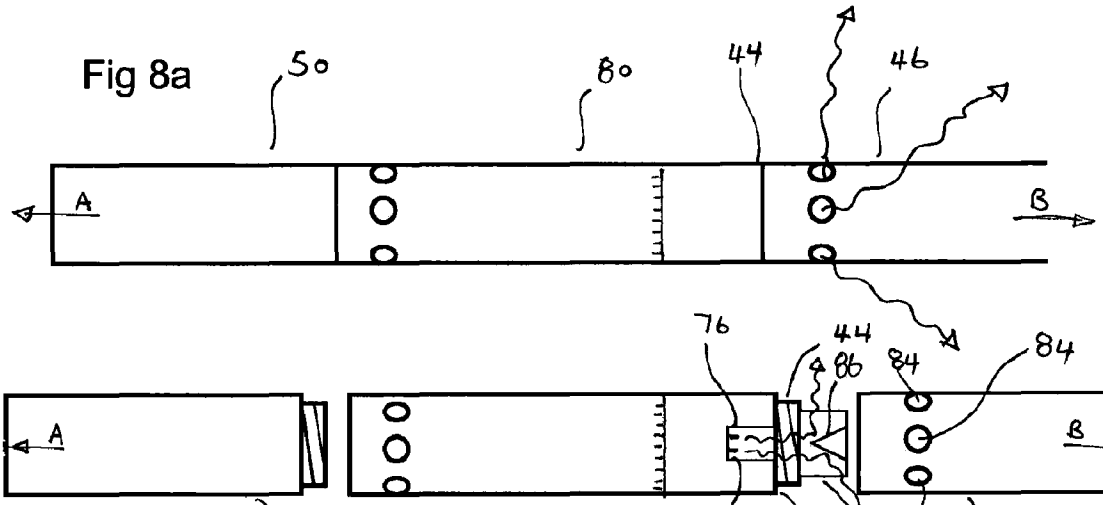

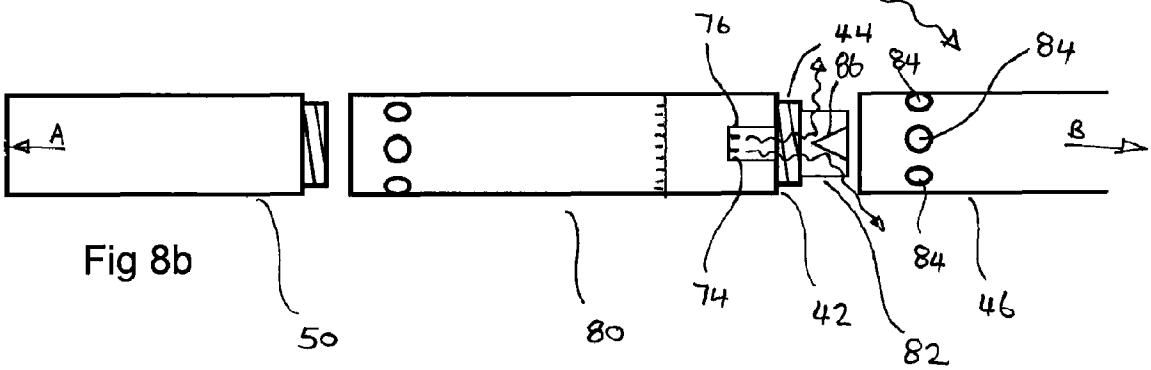

Fig 8b

INTERNATIONAL SEARCH REPORT

International application No.
PCT/AU2011/000954

A. CLASSIFICATION OF SUBJECT MATTER

Int. Cl.

E21B 25/16 (2006.01) ***E21B 47/02*** (2006.01)

According to International Patent Classification (IPC) or to both national classification and IPC

B. FIELDS SEARCHED

Minimum documentation searched (classification system followed by classification symbols)

Documentation searched other than minimum documentation to the extent that such documents are included in the fields searched

Electronic data base consulted during the international search (name of data base and, where practicable, search terms used)
WPI; EPODOC: IPC, ECLA, E21B 25/16, E21B 47/02/low & keywords (orientation, position, inclination, angle, seal, hermetically, insulation, barrier, ingress, water, dirt, core, drill, extract, module, log, transfer, record) and the like

C. DOCUMENTS CONSIDERED TO BE RELEVANT

Category*	Citation of document, with indication, where appropriate, of the relevant passages	Relevant to claim No.
	US 2007/0282533 A1 (PARFITT) 6 December 2007	
X	Figures 2-4, 6, paragraph [0020], paragraph [0022], paragraph [0028], paragraph [0017], paragraph [0006]	21, 25, 28-30
Y	Figure 2	1-4, 7-8, 10, 14-20, 22, 24, 27
	WO 2008/113127 A1 (2iC AUSTRALIA PTY LTD) 25 September 2008	
X	Figures 1-6, page 2 lines 22-23, page 2 lines 16-19, page 2 lines 30-33, page 2 lines 23-25, page 20 lines 2-6, page 17 line 34	21, 25-26
Y	Figure 1	1-4, 6-13, 18-20, 22-24
	WO 2007/137356 A1 (2iC AUSTRALIA PTY LTD) 6 December 2007	
X	Figures 1-5, page 2 lines 19-20, page 2 lines 21-22, page 2 lines 31-32, page 2 lines 25-28, page 7 lines 19-21, page 6 line 28	21, 25-26
Y	Figure 1	1-2, 4-5, 7-13, 18-20, 22-24

☐ Further documents are listed in the continuation of Box C ☒ See patent family annex

* Special categories of cited documents:

"A" document defining the general state of the art which is not considered to be of particular relevance

"E" earlier application or patent but published on or after the international filing date

"L" document which may throw doubts on priority claim(s) or which is cited to establish the publication date of another citation or other special reason (as specified)

"O" document referring to an oral disclosure, use, exhibition or other means

"P" document published prior to the international filing date but later than the priority date claimed

"T" later document published after the international filing date or priority date and not in conflict with the application but cited to understand the principle or theory underlying the invention

"X" document of particular relevance; the claimed invention cannot be considered novel or cannot be considered to involve an inventive step when the document is taken alone

"Y" document of particular relevance; the claimed invention cannot be considered to involve an inventive step when the document is combined with one or more other such documents, such combination being obvious to a person skilled in the art

"&" document member of the same patent family

Date of the actual completion of the international search	Date of mailing of the international search report
22 September 2011	04/10/2011
Name and mailing address of the ISA/AU	Authorized officer
AUSTRALIAN PATENT OFFICE PO BOX 200, WODEN ACT 2606, AUSTRALIA E-mail address: pct@ipaustralia.gov.au Facsimile No. +61 2 6283 7999	**RICHARD WORLOCK** AUSTRALIAN PATENT OFFICE (ISO 9001 Quality Certified Service) Telephone No : +61 2 6283 2971

Form PCT/ISA/210 (second sheet) (July 2009)

INTERNATIONAL SEARCH REPORT

International application No.
PCT/AU2011/000954

C (Continuation). DOCUMENTS CONSIDERED TO BE RELEVANT

Category*	Citation of document, with indication, where appropriate, of the relevant passages	Relevant to claim No.
Y	US 2009/0320604 A1 (PENMAN et al) 31 December 2009 page 1, paragraph [0011], page 2, paragraph [0030]	1, 5-6, 14-17, 20, 22, 27

This Annex lists the known "A" publication level patent family members relating to the patent documents cited in the above-mentioned international search report. The Australian Patent Office is in no way liable for these particulars which are merely given for the purpose of information.

Patent Document Cited in Search Report		Patent Family Member					
US	2007282533	AP	2142	AU	2005256104	AU	2006100113
		AU	2010101356	AU	2010200162	AU	2010249163
		BR	PI0515621	CA	2559030	MX	2007002643
		US	7584055	US	2009314545	US	2011088948
		WO	2006024111	ZA	200701750		
WO	2008113127	AU	2008100249	AU	2008229644	EP	2134921
WO	2007137356	AU	2007266335	CA	2653466		
US	2009320604	EP	2054581	WO	2008015430		

Due to data integration issues this family listing may not include 10 digit Australian applications filed since May 2001.

END OF ANNEX

(12) INTERNATIONAL APPLICATION PUBLISHED UNDER THE PATENT COOPERATION TREATY (PCT)

(19) World Intellectual Property Organization
International Bureau

(43) International Publication Date
19 August 2010 (19.08.2010)

PCT

(10) International Publication Number
WO 2010/091471 A1

(51) International Patent Classification:
E21B 25/16 (2006.01) *G01V 3/18* (2006.01)
E21B 47/01 (2006.01)

(21) International Application Number:
PCT/AU2010/000151

(22) International Filing Date:
12 February 2010 (12.02.2010)

(25) Filing Language: English

(26) Publication Language: English

(30) Priority Data:
2009900590 12 February 2009 (12.02.2009) AU

(71) Applicant *(for all designated States except US)*: **IMDEX TECHNOLOGY AUSTRALIA PTY LTD** [AU/AU]; 5 Pitino Court, Osborne Park, Western Australia 6017 (AU).

(72) Inventors; and
(75) Inventors/Applicants *(for US only)*: **JACOBS, Peter** [AU/AU]; 88 Russell Road, Madeley, Western Australia 6056 (AU). **BROWN, Kelvin** [AU/AU]; 2 Barracuda Court, Sorrento, Western Australia 6020 (AU).

(74) Agent: **WRAYS**; Ground Floor, 56 Ord Street, West Perth, Western Australia 6009 (AU).

(81) Designated States *(unless otherwise indicated, for every kind of national protection available)*: AE, AG, AL, AM, AO, AT, AU, AZ, BA, BB, BG, BH, BR, BW, BY, BZ, CA, CH, CL, CN, CO, CR, CU, CZ, DE, DK, DM, DO, DZ, EC, EE, EG, ES, FI, GB, GD, GE, GH, GM, GT, HN, HR, HU, ID, IL, IN, IS, JP, KE, KG, KM, KN, KP, KR, KZ, LA, LC, LK, LR, LS, LT, LU, LY, MA, MD, ME, MG, MK, MN, MW, MX, MY, MZ, NA, NG, NI, NO, NZ, OM, PE, PG, PH, PL, PT, RO, RS, RU, SC, SD, SE, SG, SK, SL, SM, ST, SV, SY, TH, TJ, TM, TN, TR, TT, TZ, UA, UG, US, UZ, VC, VN, ZA, ZM, ZW.

(84) Designated States *(unless otherwise indicated, for every kind of regional protection available)*: ARIPO (BW, GH, GM, KE, LS, MW, MZ, NA, SD, SL, SZ, TZ, UG, ZM, ZW), Eurasian (AM, AZ, BY, KG, KZ, MD, RU, TJ, TM), European (AT, BE, BG, CH, CY, CZ, DE, DK, EE, ES, FI, FR, GB, GR, HR, HU, IE, IS, IT, LT, LU, LV, MC, MK, MT, NL, NO, PL, PT, RO, SE, SI, SK, SM, TR), OAPI (BF, BJ, CF, CG, CI, CM, GA, GN, GQ, GW, ML, MR, NE, SN, TD, TG).

Published:
— *with international search report (Art. 21(3))*

(54) Title: DOWNHOLE TOOL HOUSING

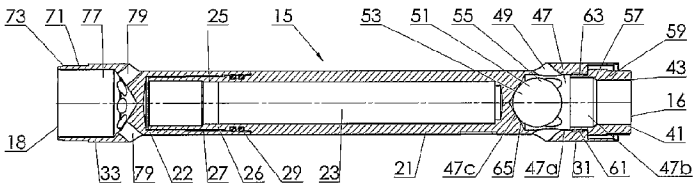

FIGURE. 7

(57) Abstract: A housing (15) for connection to a downhole assembly (17), the housing comprising first and second sections (31, 32), the first section (31) being adapted for connection to a portion of the downhole assembly, the second section (32) defining a compartment (23) to receive a downhole tool (11) or component thereof, the second section (32) being configured to provide a path (40) for fluid flow past the compartment (23) as the assembly descends within the borehole, and the first section (31) being configured for fluid communication between a passage in said portion of the downhole assembly and the fluid flow path (40).

WO 2010/091471 A1

Downhole Tool Housing

Field of the Invention

This invention relates to geological investigative operations (including core sampling and orientation) and more particularly to an assembly for deploying an instrument, or component thereof, used in such an investigation within a borehole. The invention also relates to a housing which can be incorporated in such an assembly and which can accommodate an instrument, or a component thereof, used in a geological investigation.

Background Art

The following discussion of the background art is intended to facilitate an understanding of the present invention only. The discussion is not an acknowledgement or admission that any of the material referred to is or was part of the common general knowledge as at the priority date of the application.

Certain geological investigative operations involve drilling boreholes from which core samples are extracted. Analysis of material within the core samples provides geological information in relation to the underground environment from which the core sample has been extracted. Typically, it is necessary to have knowledge of the orientation of each core sample relative to the underground environment from which it has been extracted. For this purpose, it is usual to use an orientation device for providing an indication of the origination of the core sample.

Core drilling is typically conducted with a core drill fitted as a bottom end assembly to the bottom end of a series of drill rods. The core drill comprises an outer tube which is connected to the bottom end of the series of drill rods and an inner tube which is known as a core tube. A cutting head is attached to the outer tube so that rotational torque applied to the outer tube is transmitted to the cutting head. A core is generated during the drilling operation, with the core progressively extending into the core tube as drilling progresses. When the core tube is full or becomes blocked, the core tube is retrieved from within the drill hole,

typically by way of a retrieval cable lowered down the drill rods. Once the core tube has been brought to ground surface, the core sample can be removed and subjected to the necessary analysis.

There are various proposals for attachment of the orientation device, or a downhole component thereof, to the core tube. One such proposal is disclosed in the applicant's international application WO 2006/024111, the contents of which are incorporated herein by way of reference.

The core tube and the orientation device, or a downhole component thereof, provides an assembly that is deployed within the outer tube. For this purpose, the assembly must descend within the drill rods to the outer tube, passing through fluid (such as drilling mud) contained within the drill rods. As the assembly descends, it is necessary for fluid within the drill rods to flow past the descending assembly. The fluid can easily flow through the core tube because of its construction, but the presence of the orientation device, or downhole component thereof, can provide an impediment to fluid flow. This can retard the rate of descent of the assembly, which can be undesirable as it prolongs the overall time required for the core sampling operation. Indeed, it is most desirable that the assembly be able to descend within the drill rods relatively rapidly so that time is not unnecessarily wasted during this stage the core sampling operation.

It is against this background, and the problems and difficulties associated therewith that the present invention has been developed.

While the background of the invention has been described in relation to deployment of a core sample orientation device, or a downhole component thereof, it should be understood that the invention may be applicable to deployment of any appropriate device within a borehole.

Disclosure of the Invention

According to a first aspect of the invention there is provided a housing for connection to a downhole assembly, the housing comprising first and second

sections, the first section being adapted for connection to a portion of the downhole assembly., the second section defining a compartment to receive a downhole tool or component thereof, the second section being configured to provide a path for fluid flow past the compartment as the assembly descends within the borehole, and the first section being configured for fluid communication between a passage in said portion of the downhole assembly and the fluid flow path.

The first section may comprise a cavity for communication with the passage within the said portion, and one or more ports extending between the cavity and the fluid path to provide for fluid communication between the passage in the said portion and the fluid flow path.

Preferably, the housing further comprises a third section spaced from the first section, with the second section disposed between the first and third sections.

Preferably, the third section is adapted for connection to a further portion of the downhole assembly in which there is a further passage, the third section being configured for fluid communication between the fluid flow path and the further passage. .

The third section may comprise a cavity for communication with the further passage within the further portion of the assembly and one or more ports extending between the fluid flow path and the cavity to provide for the fluid communication between the communication path and the passage in the further tubular portion.

The housing may comprise at least two parts adapted for connection together and selectively separable to provide access to the compartment.

Preferably, a valve means is provided to permit fluid in the borehole (or more particularly the drill rods) to flow past the assembly as the latter descends within the borehole while inhibiting fluid flow past the assembly as the latter ascends within the borehole.

The valve means may comprise a check valve such as a ball check valve.

The valve means may be associated with the first section of the housing.

The downhole tool, or component thereof, may be of any appropriate form. An example of such a tool is an orientation device for providing an indication of the orientation of a core sample cut by a core drill in geological investigative operations.

According to a second aspect of the invention there is provided a housing adapted for connection to a tubular portion in a downhole assembly, the tubular portion having an axial passage through which fluid in a borehole can pass as the assembly descends within the borehole, and the housing comprising first and second sections, the first section being adapted for connection to the tubular portion, the second section defining a compartment to receive a downhole tool or component thereof, the second section being configured to provide a path for fluid flow past the compartment as the assembly descends within the borehole, and the first section being configured for fluid communication between the axial passage in the tubular portion and the fluid flow path.

According to a third aspect of the invention there is provided a housing adapted for connection to a core drill inner tube, the inner tube having an axial passage through which fluid in a borehole can pass as the inner tube and housing connected thereto descend within the borehole, the housing comprising first, second and third sections, the first section being adapted for connection to the inner tube, the second section defining a compartment to receive a core sample measurement device or component thereof, the second section being configured to provide a path for fluid flow past the compartment as the inner tube and housing connected thereto descend within the borehole, and the first section being configured for fluid communication between the axial passage in the inner tube and the fluid flow path, the third section being spaced from the first section, with the second section disposed between the first and third sections, the third section being adapted for connection to a portion of a downhole assembly in

which there is a further passage, the third section being configured for fluid communication between the fluid flow path and the further passage.

The third section may comprise a cavity for communication with the further passage within the further portion of the assembly and one or more ports extending between the fluid flow path and the cavity to provide for the fluid communication between the communication path and the passage in the further tubular portion.

According to a fourth aspect of the invention there is provided an assembly movable along a borehole, the assembly comprising a tubular portion and a housing connected to the tubular portion, the tubular portion having an axial passage through which fluid in the borehole can pass as the assembly descends within the borehole, and the housing comprising first and second sections, the first section being connected to the tubular portion, the second section defining a compartment to receive a downhole tool or component thereof, the second section being configured to provide a path for fluid flow past the compartment as the assembly descends within the borehole, and the first section being configured for fluid communication between the axial passage in the tubular portion and the fluid flow path.

Typically, the assembly is movable along a series of drill rods located within the borehole.

With this arrangement, fluid in the borehole (or more particularly within the drill rods), can flow past the assembly as the latter descends, notwithstanding the presence of the borehole tool in the assembly. Preferably, the arrangement is such that the fluid can flow past the assembly at a rate sufficient to allow the assembly to descent rapidly.

Preferably, the fluid flow path is defined by a space within the borehole (or more particularly within the drill rods) around the second section of the housing portion. With such an arrangement, the second portion defines the inner boundary of the fluid flow path. Other arrangements are, of course, possible. In another

arrangement, for example, the fluid flow path may comprise one or more flow passages incorporated in the second section to allow fluid flow past the second section.

The first section may comprise a cavity communicating with the axial passage within the tubular portion and one or more ports extending between the cavity and the fluid path to provide for fluid communication between the axial passage in the tubular portion and the fluid flow path.

Preferably, the housing further comprises a third section spaced from the first section with the second section disposed between the first and third sections.

Preferably, the third section is connected to a further portion of the assembly in which there is a further axial passage through which fluid in the borehole (or more particularly the drill rods) can pass as the assembly descends, the third section being configured for fluid communication between the fluid flow path and the further axial passage. .

The third section may comprise a cavity communicating with the further axial passage within the further portion of the assembly and one or more ports extending between the fluid flow path and the cavity to provide for the fluid communication between the communication path and the further axial passage in the further tubular portion.

Preferably, a valve means is provided to permit fluid in the borehole (or more particularly the drill rods) to flow past the assembly as the latter descends within the borehole while inhibiting fluid flow past the assembly as the latter ascends within the borehole.

According to a fifth aspect of the invention there is provided a housing for an assembly according to the fourth aspect of the invention, the housing being as described above.

According to a sixth aspect of the invention there is provided a core drill assembly movable along a borehole, the assembly comprising a core drill inner tube and a housing connected to the inner tube, the inner tube having an axial passage through which fluid in the borehole can pass as the assembly descends within the borehole, and the housing comprising first and second sections, the first section being connected to the inner tube, the second section defining a compartment to receive a core sample measurement device or component thereof, the second section being configured to provide a path for fluid flow past the compartment as the assembly descends within the borehole, and the first section being configured for fluid communication between the axial passage in the tubular portion and the fluid flow path.

According to a seventh aspect of the invention there is provided a core drill assembly movable along a borehole, the assembly comprising a core drill inner tube and a housing connected to the inner tube, the inner tube having an axial passage through which fluid in the borehole can pass as the assembly descends within the borehole, and the housing comprising first , second and third sections, the first section being connected to the inner tube, the second section defining a compartment to receive a core sample measurement device or component thereof, the second section being configured to provide a path for fluid flow past the compartment as the assembly descends within the borehole, the first section being configured for fluid communication between the axial passage in the inner tube and the fluid flow path, the third section being spaced from the first section, with the second section disposed between the first and third sections, the third section being adapted for connection to a portion of the downhole assembly in which there is a further passage, the third section being configured for fluid communication between the fluid flow path and the further passage.

The core sample measurement device may comprise a core sample orientation device, an example of which is disclosed in the applicant's aforementioned international application WO 2006/024111.

Brief Description of the Drawings

The invention will be better understood by reference to the following description of one specific embodiment thereof as shown in the accompanying drawings in which:

Figure 1 is perspective view of a housing according to the embodiment, viewed from one end thereof;

Figure 2 is a view similar to Figure 1, except that the housing is viewed from the other end thereof;

Figure 3 is a side elevational view of the housing;

Figure 4 is a side elevational view of the housing showing the two parts thereof in a separated condition;

Figure 5 is a side elevational view of the housing in an exploded condition;

Figure 6 is a sectional perspective view of the housing within a drill string;

Figure 7 is a sectional elevational view of the housing

Figure 8 is a view similar to Figure 6, except that the flow path of fluid relative to the housing is shown;

Figure 9 is a schematic view of an assembly in which the housing is accommodated; and

Figure 10 is a schematic view of one part of the housing, with the other part having been separated therefrom to provide access to a downhole unit accommodated in the first part, and a control unit shown for cooperation with the downhole unit.

Best Mode(s) for Carrying Out the Invention

The embodiment is directed to deployment of a core sample orientation system for providing an indication of the orientation of a core sample relative to the underground environment from which the core sample has been extracted. The core orientation system utilised in this embodiment comprises a first tool portion adapted for connection to a core tube for recording data relative to the orientation of the core tube, and a second tool portion adapted to cooperate with the first tool portion to receive and process orientation data from the first portion and provide an indication of the orientation of the core sample within the core tube at the time of separation of the core sample from the underground environment from which it was obtained. With such an arrangement, the first tool portion is deployed underground in a borehole with the core tube to record data corresponding to the orientation of the core tube (and any core sample contained therein). Once the core tube, along with the first tool portion attached thereto, had been retrieved from underground, the second tool portion is brought into cooperation with the first tool portion to receive and process the orientation data received from the first portion. This arrangement is advantageous as it is not necessary for the second tool portion to be deployed underground and be exposed to the harsh conditions associated with the underground environment. An example of such a core sample orientation system is disclosed in the applicant's Australian Provisional Patent Application 2009900670 entitled "Modular Core Orientation Tool", the contents of which are incorporated herein by way of reference. In such a system, the first portion comprises a downhole unit and the second portion comprises a control unit.

In the arrangement illustrated, the first tool portion is identified by reference numeral 11 and the second tool portion is identified by reference numeral 12. The first portion 11 is shown in Figures 6 and 8, and the second portion 12 is shown in Figure 10.

The core drilling operation is performed with a core drill fitted as a bottom end assembly to a series of drill rods. The core drill comprises an inner tube, being the core tube 13, as shown in Figure 13, and an outer tube.

The embodiment provides a housing 15 for accommodating the first tool portion 11 as it is deployed within the borehole, as shown in Figures 6 and 8.

The core tube 13 and the housing 15 form part of an assembly 17, which is shown in Figure 9 and which also includes a back-end portion 19. The back-end portion 19 is of standard wire line construction and is normally connected directly to core tube 13; however, in this embodiment, the housing 15 is configured for installation between the core tube 13 and the back- end portion 19.

The housing 15 has a bottom end 16 adapted for connection to the upper end of the core tube 13, and an top end 18 adapted for connection to the back-end portion 19, as will be explained.

In this way, the first tool portion 11 is also connected to the core tube 13 so that it record data relative to the orientation of the core tube and any core sample contained therein.

The housing 15 comprises two parts, being lower body part 21 and an upper cap part 22. The two parts 21, 22 cooperate to define an inner compartment 23 adapted to receive and accommodate the first tool portion 11. The compartment is best seen in Figure 7. The parts 21, 22 are selectively separable to provide access to the compartment 23. In the arrangement illustrated in Figure 5, the two parts 21, 22 are shown in the separated condition.

The lower body part 21 has an end 25 configured as a spigot 26, and the upper cap portion 22 has an adjacent end configured as a socket 27 in which the spigot 26 can be threadingly received to secure the two parts together. A sealing means 29 is provided to effect fluid-tight sealing engagement between the two parts 21, 22. In the arrangement illustrated, the sealing means 29 comprises O-rings on the spigot 26.

The housing 15 comprises three sections, being a first section 31, a second section 32 and a third section 33. The first and third sections 31, 33 comprise end

sections, and the second section 32 comprises an intermediate section between the two end sections.

The two parts 21, 22 cooperate to define the three sections 31, 32, and 33. Specifically, the lower body part 21 defines the first section 31 which constitutes the lowermost section and which terminates at the bottom end. 16. The upper cap part 22 defines the third section 33 which constitutes the uppermost section and which terminates at the top end 18. The lower body part 21 and the upper cap part 22 cooperate to define the intermediate second section 32`.

The two end sections 31, 33 each have a generally circular outer periphery 35. Similarly, the intermediate second section 32 also has a generally circular outer periphery 37. The outer periphery 37 of the intermediate second section 32 is of smaller diameter than the outer peripheries 35 of the two end sections 31, 33. With such an arrangement, an annular space 40 is established around the intermediate second section 32 when the housing 15 is accommodated within the drill rods or the outer tube 14, as shown in Figures 6 and 8. The annular space 40 is bounded at its outer periphery by the drill rods or the outer tube 14 and is bounded at its inner periphery by the intermediate section 32.

The first end section 31 is configured for threaded engagement with the adjacent end of the core tube 13. For this purpose, the end section 31 is configured as a threaded coupling 41 having a thread formation 43 for threaded engagement with the adjacent end of the core tube 13 which has a matching threaded coupling. In the arrangement illustrated, the threaded coupling 41 is of female configuration and the threaded formation 43 is a female thread.

The first end section 31 incorporates a cavity 47 for communicating with the interior passage within the core tube 13 when the housing 15 is threadedly connected to the core tube 13. The cavity 47 has a peripheral wall 47a, a bottom end 47b which is open and which communicates with the bottom end 16 of the housing 15, and a top wall 47c.

Further, the first end section 31 is provided with a plurality of ports 49 which extend between the cavity 47 and the exterior of the housing 15 adjacent the intermediate second section 32, as best seen in Figure 7 of the drawings. With this arrangement, the first end section 31 is configured to provide a fluid flow path between the interior passage of the core tube 13 and the exterior of the housing 15 around the intermediate second section 32 thereof. In the arrangement shown, the ports 49 are circumferentially spaced about the cavity 47, and extend outwardly from the cavity wall 47a and upwardly toward the top end 18

The first end section 31 also incorporates a valve means 51 to permit fluid flow from the interior passage of the core tube 13 to the annular space 40 about the intermediate second section 32 of the housing 15, while inhibiting fluid flow in the reverse direction.

The valve means 51 comprises a check-valve in the form of ball check-valve 53. The ball check-valve 53 comprises a spherical valve ball 55 and a valve seat 57 against which the valve ball 55 can sealingly engage. The valve seat 57 is provided around the periphery of the open end 47b of the cavity 47. In the arrangement shown, the valve seat 57 is defined within a valve housing 59 connected to an inner portion 61 of the first end section 31. The inner portion 61 is adjacent the cavity 47 and at the bottom entry end 47b of the cavity 47, as shown in Figure 7. The valve housing 59 incorporates a male end 63 for threaded engagement with the inner portion 61. The valve housing 59 cooperates with the inner cavity 47 to provide a cage for retaining valve ball 55 in position. While retained in position, the valve ball 55 is movable into and out of a sealing engagement with the valve seat 57 under the influence of fluid flow in accordance with known ball check-valve operation. The valve housing 59 is also configured to define the threaded coupling 41 having a thread formation 43 at end 16 for threaded engagement with the adjacent end of the core tube 13

The valve means 15 is centrally located within the housing 15 and is sized to optimise fluid flow through the housing 15 to facilitate rapid descent of the assembly 17 in a borehole.

The top wall 47c of the cavity 47 is configure to provide a recess 65 into which the valve ball 55 can be received when the check-valve 53 is open during descent of the housing 15. The valve ball 55 received and captively retained in the recess 65 under the influence of fluid flow through the cavity 47 during descent of the housing 15. With this arrangement, the valve ball 55 is constrained by the recess 65 centrally within cavity 47 and away from the ports 49 so as not to impede fluid flow through the cavity 47to the ports 49.

The valve means 51 is operable to inhibit fluid flow in the reverse direction in order to isolate any core sample contained within the interior passage within the core tube 13 from the effects of fluid flow during ascent of the core tube.

The third end section 33, which is at the top end 18, is configured for threaded engagement with the adjacent end of the back-end portion 19. For this purpose, the third end section 33 is configured as a threaded coupling 71 having a thread formation 73 for threaded engagement with the adjacent end of the back-end portion 19 which has a matching threaded coupling. In the arrangement illustrated, the threaded coupling 71 is of male configuration and the threaded formation 73 is a male thread.

The third end section 33 incorporates a cavity 77 for communicating with the interior of the back-end portion 19 when the housing 15 is threadedly connected to the back-end portion. Further, the third end section 33 is provided with a plurality of ports 79 which extend between the cavity 77 and the exterior of the housing 15 adjacent the intermediate second section 32, as best seen in Figure 7. With this arrangement, the third end section 33 is configured to provide a fluid flow path between the exterior of the housing 15 around the intermediate second section 32 and the back-end portion 19.

Operation of the assembly 17 will now be described. The housing 15 is installed between the core tube 13 and the back-end portion 19, as previously described to provide the assembly 17.

The two parts 21, 22 of the housing 15 are separated to allow installation of the first tool portion 11 of the orientation device into the compartment 23 and then coupled together to encase the first tool portion within the compartment.

The assembly 17 is then lowered down the drill rods within the borehole in conventional manner. As the assembly 17 descends, fluid within the drill rods flows upwardly (relative to the descending assembly 17) along the interior passage of the core tube 11 and into the valve housing 59, causing the ball valve 55 to move away from the valve seat 57 and allow the fluid flow to enter the cavity 47 within the first end section 31 of the housing 25. From the cavity 47 the fluid flows through the ports 49 and into the annular space 40 surrounding the intermediate second section 32. The fluid flows along the annular space 40 to the ports 79 at the end section 33, from where the fluid flows through the ports 79 and into the central cavity 77. From the central cavity 77 the fluid flows through the hollow interior of the back-end portion 19 in the usual way. The flow path is depicted in Figure 8 by flow lines identified by reference numeral 80. Thus, the annular space 40 surrounding the intermediate second section 32 provided a fluid flow path between the ports 49 and the ports 79.

With this arrangement, fluid within the drill rods 14 is able to flow past the housing 15 as it descends within the drill rods, and so the presence of the housing 15 does not restrict fluid flow to such an extent to inhibit relatively rapid descent of the assembly 17.

At the completion of the core drilling operation, the core sample is retrieved in known manner. As the assembly 17 ascends within the drill rods, the relative fluid flow causes the valve ball 55 to sealingly engage the valve seat 57 to thereby close the check valve 53.

Once the assembly 17 is at ground level, the two parts 21, 22 of the housing 15 can be separated to provide access to the first tool portion 11. The second tool portion 12 can then be brought into cooperation with the first tool portion 11, as shown in Figure 10, to receive and process the orientation data received from the first tool portion 11.

Once the orientation of the core sample within the core tube 11 has been established and recorded, the core sample can be removed from the core tube 11. The two parts 21, 22 of the housing 15 can then be brought together again to encase the first tool portion 11 within the housing so that the next core sampling operation can be performed when required.

From the foregoing, it is evident that the present embodiment provides a simple yet highly effective way of enabling fluid to flow past the assembly 17 as it descends within a borehole (or more particularly within the drill rods), thereby facilitating rapid descent.

It should be appreciated that the scope of the invention is not limited to the scope of the embodiment described.

While the embodiment has been described in relation to deployment of a core sample orientation device, or a downhole component thereof, it should be understood that the invention may be applicable to deployment of any appropriate device within a borehole.

Throughout the specification and claims, unless the context requires otherwise, the word “comprise” or variations such as “comprises” or “comprising”, will be understood to imply the inclusion of a stated integer or group of integers but not the exclusion of any other integer or group of integers.

The Claim Defining the Invention is as Follows:

1. A housing for connection to a downhole assembly, the housing comprising first and second sections, the first section being adapted for connection to a portion of the downhole assembly., the second section defining a compartment to receive a downhole tool or component thereof, the second section being configured to provide a path for fluid flow past the compartment as the assembly descends within the borehole, and the first section being configured for fluid communication between a passage in said portion of the downhole assembly and the fluid flow path.

2. The housing according to claim 1 wherein the first section comprises a cavity for communication with the passage within said portion, and one or more ports extending between the cavity and the fluid path to provide for fluid communication between the passage in said portion and the fluid flow path.

3. The housing according to claim 1 or 2 further comprising a third section spaced from the first section, with the second section disposed between the first and third sections.

4. The housing according to claim 3 wherein the third section is adapted for connection to a further portion of the downhole assembly in which there is a further passage, the third section being configured for fluid communication between the fluid flow path and the further passage.

5. The housing according to claim 4 wherein the third section comprises a cavity for communication with the further passage within the further portion of the assembly and one or more ports extending between the fluid flow path and the cavity to provide for the fluid communication between the communication path and the passage in the further tubular portion.

6. The housing according to any one of the preceding claims comprising at least two parts adapted for connection together and selectively separable to provide access to the compartment.

7. The housing according to any one of the preceding claims further comprising a valve means operable to permit fluid in a borehole to flow past the assembly as the latter descends within the borehole while inhibiting fluid flow past the assembly as the latter ascends within the borehole.

8. The housing according to claim 7 wherein comprise a check valve such as a ball check valve.

9. The housing according to claim 7 or 8 wherein the valve means is associated with the first section..

10. The housing according to claim 7, 8 or 9 wherein the valve means is centrally located and sized to optimise fluid flow through the housing to facilitate rapid descent.

11. A housing adapted for connection to a tubular portion in a downhole assembly, the tubular portion having an axial passage through which fluid in a borehole can pass as the assembly descends within the borehole, and the housing comprising first and second sections, the first section being adapted for connection to the tubular portion, the second section defining a compartment to receive a downhole tool or component thereof, the second section being configured to provide a path for fluid flow past the compartment as the assembly descends within the borehole, and the first section being configured for fluid communication between the axial passage in the tubular portion and the fluid flow path.

12. The housing according to claim 11 further comprising a third section spaced from the first section, with the second section disposed between the first and third sections, the third section is adapted for connection to a further portion of the downhole assembly in which there is a further passage, the third section being configured for fluid communication between the fluid flow path and the further passage. .

13.A housing adapted for connection to a core drill inner tube, the inner tube having an axial passage through which fluid in a borehole can pass as the inner tube and housing connected thereto descend within the borehole, the housing comprising first, second and third sections, the first section being adapted for connection to the inner tube, the second section defining a compartment to receive a core sample measurement device or component thereof, the second section being configured to provide a path for fluid flow past the compartment as the inner tube and housing connected thereto descend within the borehole, and the first section being configured for fluid communication between the axial passage in the inner tube and the fluid flow path, the third section being spaced from the first section, with the second section disposed between the first and third sections, the third section being adapted for connection to a portion of a downhole assembly in which there is a further passage, the third section being configured for fluid communication between the fluid flow path and the further passage.

14.The housing according to claim 13 wherein the third section comprises a cavity for communication with the further passage within the further portion of the assembly and one or more ports extending between the fluid flow path and the cavity to provide for the fluid communication between the communication path and the passage in the further tubular portion.

15.An assembly movable along a borehole, the assembly comprising incorporating a housing according to any one of the preceding claims.

16.An assembly movable along a borehole, the assembly comprising a tubular portion and a housing connected to the tubular portion, the tubular portion having an axial passage through which fluid in the borehole can pass as the assembly descends within the borehole, and the housing comprising first and second sections, the first section being connected to the tubular portion, the second section defining a compartment to receive a downhole tool or component thereof, the second section being configured to provide a path for fluid flow past the compartment as the assembly descends within the borehole,

and the first section being configured for fluid communication between the axial passage in the tubular portion and the fluid flow path.

17. The assembly according to claim 16 wherein the fluid flow path is defined by a space within the borehole around the second section of the housing portion.

18.The assembly according to claim 16 or 17 wherein the first section comprises a cavity communicating with the axial passage within the tubular portion and one or more ports extending between the cavity and the fluid path to provide for fluid communication between the axial passage in the tubular portion and the fluid flow path.

19.The assembly according to claim 16, 17 or 18 wherein the housing further comprises a third section spaced from the first section with the second section disposed between the first and third sections.

20.The assembly according to claim 19 wherein the third section is connected to a further portion of the assembly in which there is a further axial passage through which fluid in the borehole can pass as the assembly descends, the third section being configured for fluid communication between the fluid flow path and the further axial passage. .

21.The assembly according to claim 19 or 20 wherein the third section comprises a cavity communicating with the further axial passage within the further portion of the assembly and one or more ports extending between the fluid flow path and the cavity to provide for the fluid communication between the communication path and the further axial passage in the further tubular portion.

22.The assembly according to any one of claims 16 to 21 further comprising a valve means to permit fluid in the borehole to flow past the assembly as the latter descends within the borehole while inhibiting fluid flow past the assembly as the latter ascends within the borehole.

23.A housing for an assembly according any one of claims 16 o 22.

24.A core drill assembly movable along a borehole, the assembly comprising a core drill inner tube and a housing connected to the inner tube, the inner tube having an axial passage through which fluid in the borehole can pass as the assembly descends within the borehole, and the housing comprising first and second sections, the first section being connected to the inner tube, the second section defining a compartment to receive a core sample measurement device or component thereof, the second section being configured to provide a path for fluid flow past the compartment as the assembly descends within the borehole, and the first section being configured for fluid communication between the axial passage in the tubular portion and the fluid flow path.

25.A core drill assembly movable along a borehole, the assembly comprising a core drill inner tube and a housing connected to the inner tube, the inner tube having an axial passage through which fluid in the borehole can pass as the assembly descends within the borehole, and the housing comprising first , second and third sections, the first section being connected to the inner tube, the second section defining a compartment to receive a core sample measurement device or component thereof, the second section being configured to provide a path for fluid flow past the compartment as the assembly descends within the borehole, the first section being configured for fluid communication between the axial passage in the inner tube and the fluid flow path, the third section being spaced from the first section, with the second section disposed between the first and third sections, the third section being adapted for connection to a portion of the downhole assembly in which there is a further passage, the third section being configured for fluid communication between the fluid flow path and the further passage.

26.A housing substantially as herein described with reference to the accompanying drawings.

27.An assembly substantially as herein described with reference to the accompanying drawings.

28. A core drill assembly substantially as herein described with reference to the accompanying drawings.

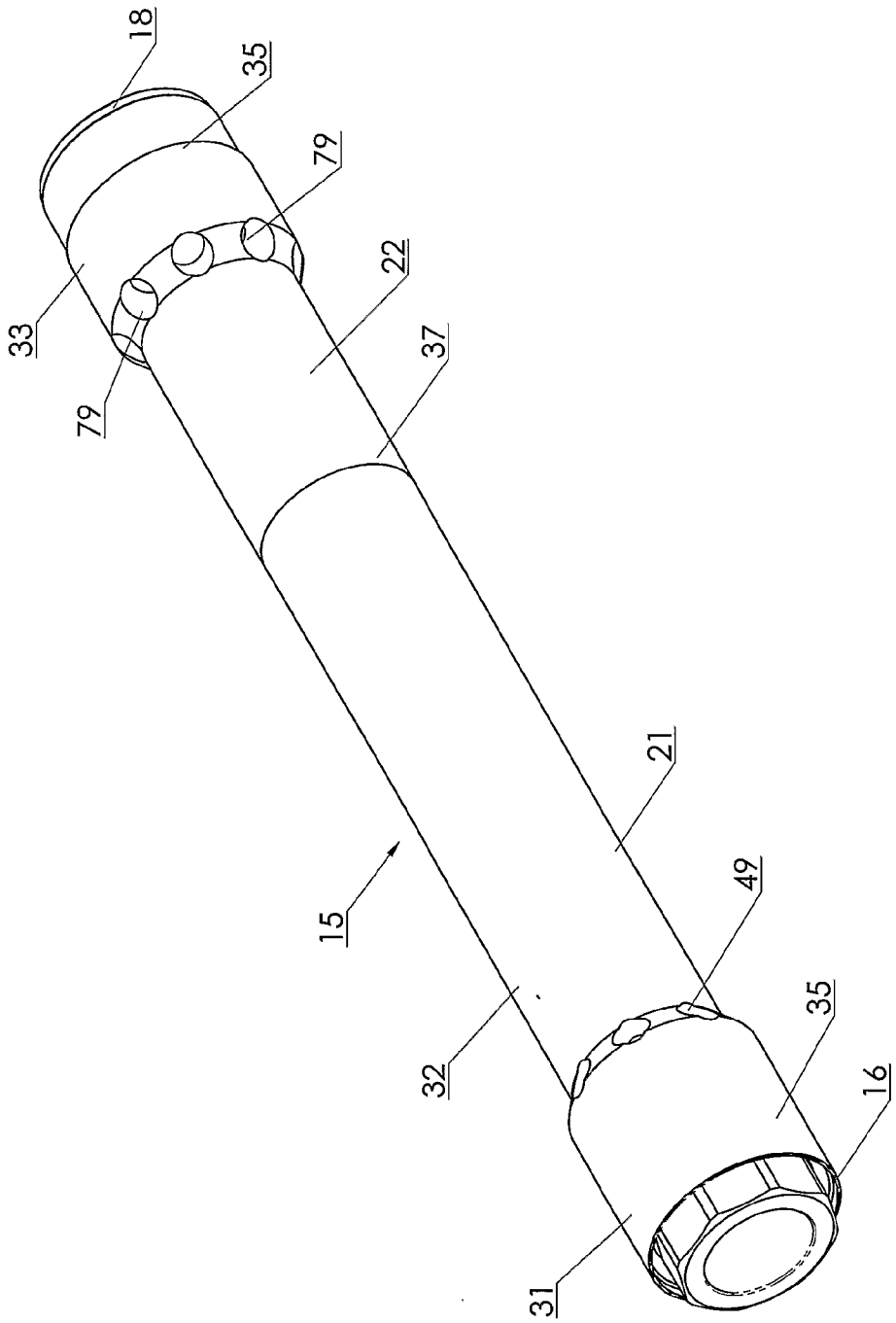

FIGURE 1

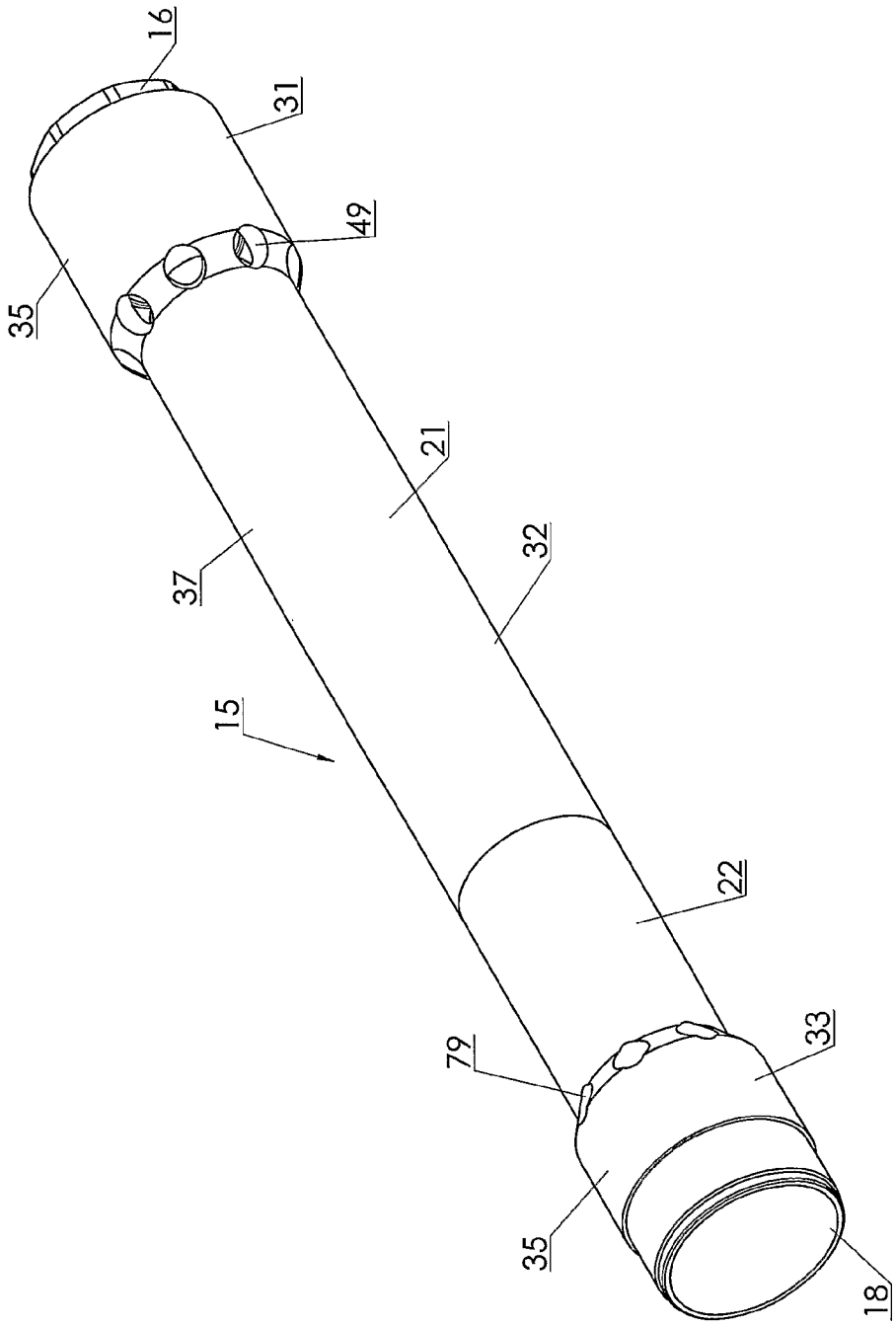

FIGURE 2

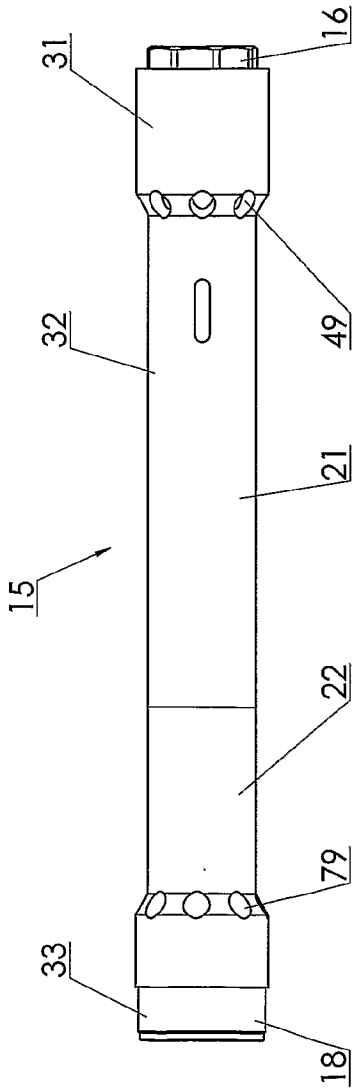

FIGURE 3

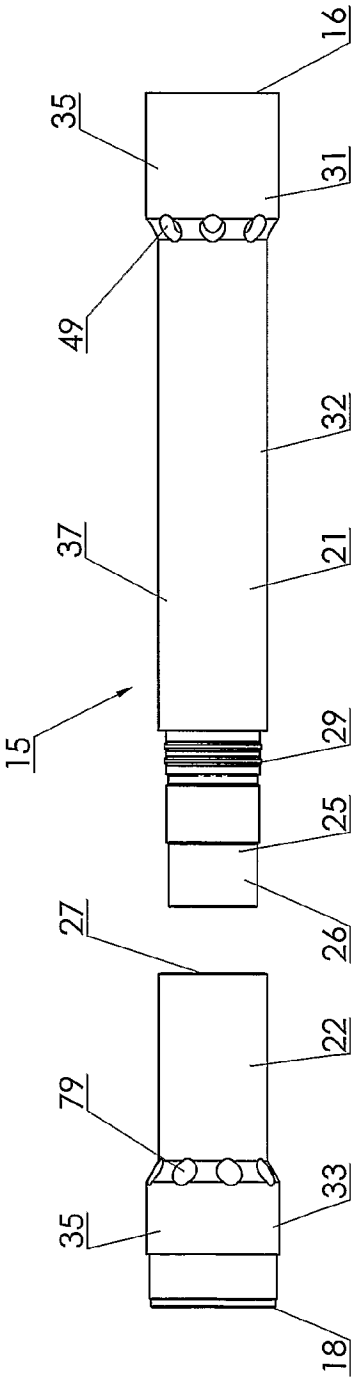

FIGURE 4

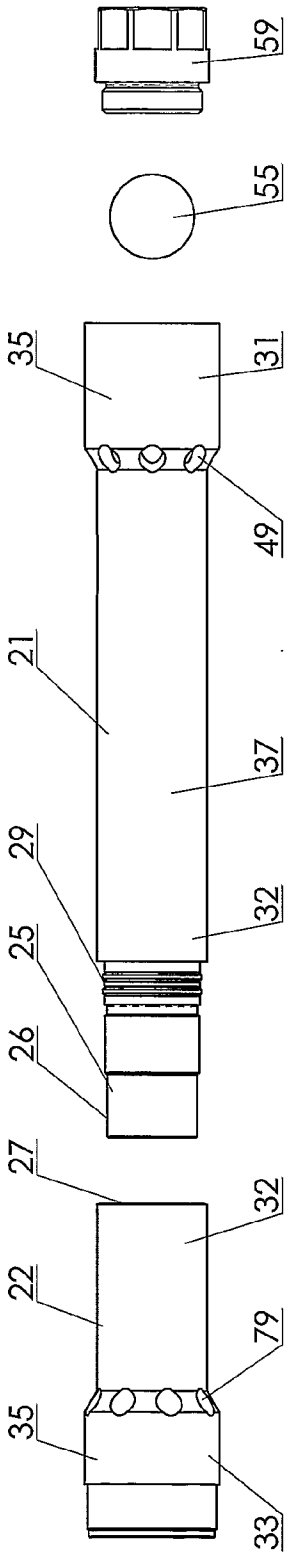

FIGURE 5

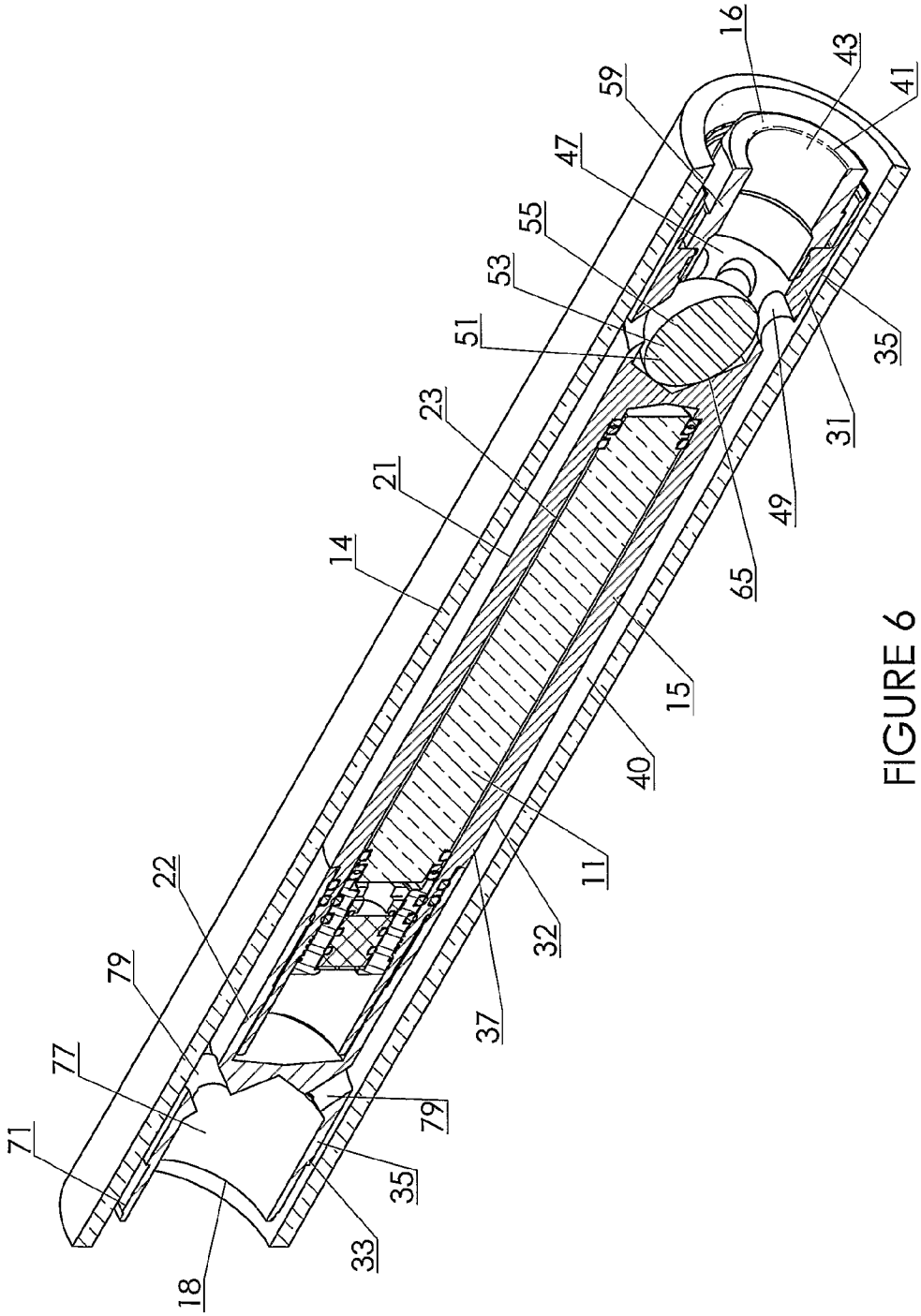
16
43
41
59
47
55
53
51
23
21
14
22
79
77
71
18
33
35
79
37
32
11
40
15
65
49
31
35

FIGURE 6

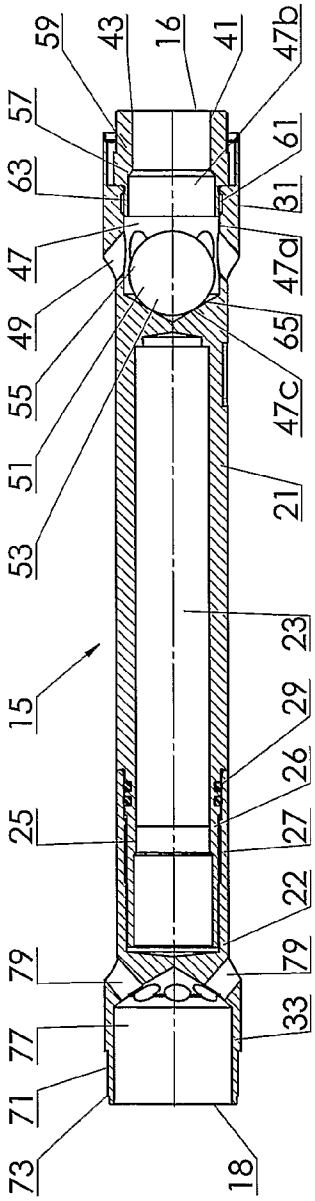
59
57
63
47
49
55
51
53
15
25
79
77
71
73
43
16
41
47b
61
31
47a
65
47c
21
23
29
26
27
22
79
33
18

FIGURE. 7

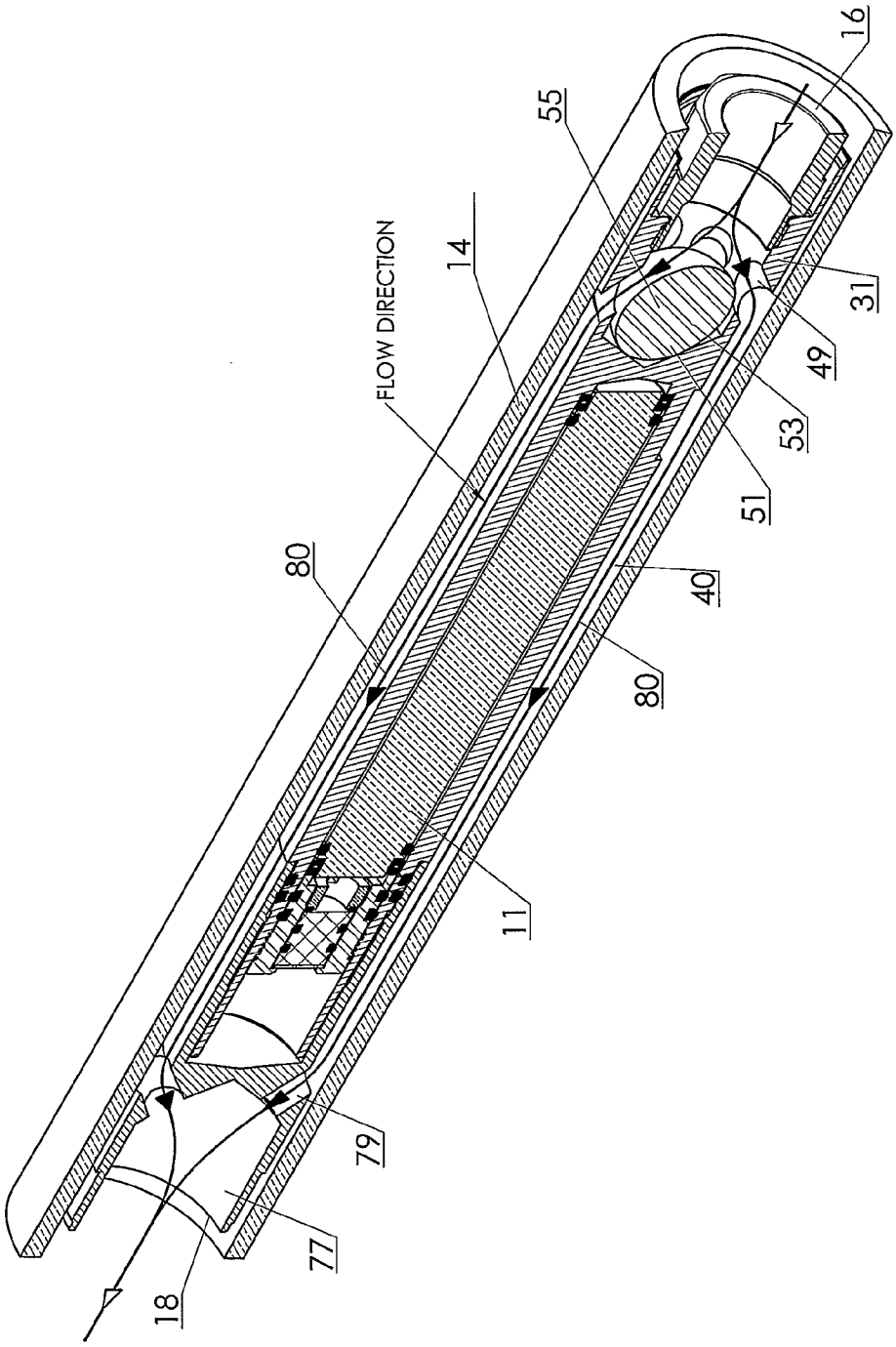

FIGURE 8

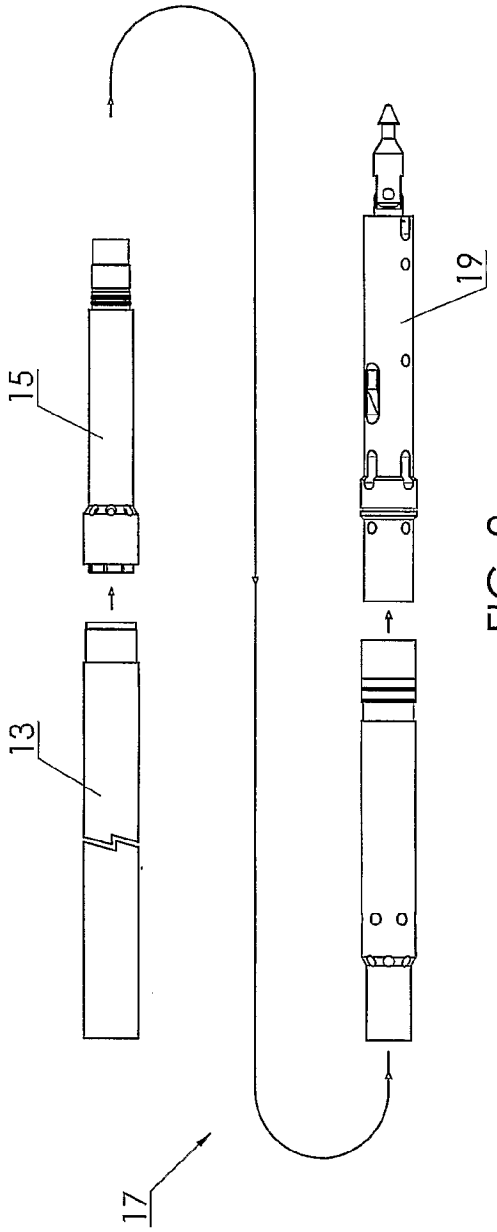

FIG. 9

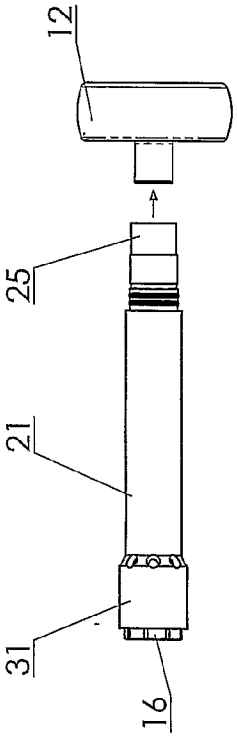

FIG. 10

INTERNATIONAL SEARCH REPORT

International application No.
PCT/AU2010/000151

A. CLASSIFICATION OF SUBJECT MATTER

Int. Cl.

E21B 25/16 (2006.01) *E21B 47/01* (2006.01) *G01V 3/18* (2006.01)

According to International Patent Classification (IPC) or to both national classification and IPC

B. FIELDS SEARCHED

Minimum documentation searched (classification system followed by classification symbols)

Documentation searched other than minimum documentation to the extent that such documents are included in the fields searched

Electronic data base consulted during the international search (name of data base and, where practicable, search terms used)
EPODOC and Derwent WPI: IPC E21B 25/IC, E21B23/08/low, E21B34/06/low, E21B47/01, G01V3/18 with keywords housing, enclosure, compartment, chamber, core, orientation, cavity, passage, annular, bypass, divert, redirect, fluid, liquid, gas, water, mud and the like; Google Patents and Google Search with similar keywords

C. DOCUMENTS CONSIDERED TO BE RELEVANT

Category*	Citation of document, with indication, where appropriate, of the relevant passages	Relevant to claim No.
X	US 6644421 B1 (LONG) 11 November 2003 See abstract, col 2 ln 28 – col 4 ln 13; Figures 1A, 1B and 2	1-25
A	Derwent Abstract Accession No 1983-715272, SU 956743 A (DRILLING TECHN RES) 07 September 1982 See English abstract	1-25
A	WO 2006/024111 A1 (AUSTRALIAN MUD COMPANY LTD) 09 March 2006 See abstract, page 3 ln 14-20, page 11 ln 22 – page 13 ln 4; Figures 2-4	1-25

☐ Further documents are listed in the continuation of Box C ☒ See patent family annex

* Special categories of cited documents:

"A" document defining the general state of the art which is not considered to be of particular relevance

"E" earlier application or patent but published on or after the international filing date

"L" document which may throw doubts on priority claim(s) or which is cited to establish the publication date of another citation or other special reason (as specified)

"O" document referring to an oral disclosure, use, exhibition or other means

"P" document published prior to the international filing date but later than the priority date claimed

"T" later document published after the international filing date or priority date and not in conflict with the application but cited to understand the principle or theory underlying the invention

"X" document of particular relevance; the claimed invention cannot be considered novel or cannot be considered to involve an inventive step when the document is taken alone

"Y" document of particular relevance; the claimed invention cannot be considered to involve an inventive step when the document is combined with one or more other such documents, such combination being obvious to a person skilled in the art

"&" document member of the same patent family

Date of the actual completion of the international search	Date of mailing of the international search report
30 March 2010	- 7 APR 2010
Name and mailing address of the ISA/AU AUSTRALIAN PATENT OFFICE PO BOX 200, WODEN ACT 2606, AUSTRALIA E-mail address: pct@ipaustralia.gov.au Facsimile No. +61 2 6283 7999	Authorized officer **JUDE FERNANDO** AUSTRALIAN PATENT OFFICE (ISO 9001 Quality Certified Service) Telephone No : +61 2 6283 2419

Form PCT/ISA/210 (second sheet) (July 2009)

INTERNATIONAL SEARCH REPORT

International application No.
PCT/AU2010/000151

Box No. II Observations where certain claims were found unsearchable (Continuation of item 2 of first sheet)

This international search report has not been established in respect of certain claims under Article 17(2)(a) for the following reasons:

1. ☐ Claims Nos.:
because they relate to subject matter not required to be searched by this Authority, namely:

2. ☒ Claims Nos.: **26-28**
because they relate to parts of the international application that do not comply with the prescribed requirements to such an extent that no meaningful international search can be carried out, specifically:
The claims do not comply with Rule 6.2(a) because they rely on references to the description and/or drawings.

3. ☐ Claims Nos.:
because they are dependent claims and are not drafted in accordance with the second and third sentences of Rule 6.4(a)

Box No. III Observations where unity of invention is lacking (Continuation of item 3 of first sheet)

This International Searching Authority found multiple inventions in this international application, as follows:

1. ☐ As all required additional search fees were timely paid by the applicant, this international search report covers all searchable claims.
2. ☐ As all searchable claims could be searched without effort justifying additional fees, this Authority did not invite payment of additional fees.
3. ☐ As only some of the required additional search fees were timely paid by the applicant, this international search report covers only those claims for which fees were paid, specifically claims Nos.:
4. ☐ No required additional search fees were timely paid by the applicant. Consequently, this international search report is restricted to the invention first mentioned in the claims; it is covered by claims Nos.:

Remark on Protest

☐ The additional search fees were accompanied by the applicant's protest and, where applicable, the payment of a protest fee.

☐ The additional search fees were accompanied by the applicant's protest but the applicable protest fee was not paid within the time limit specified in the invitation.

☐ No protest accompanied the payment of additional search fees.

REFLEX EXHIBIT 1013 - 146/432

INTERNATIONAL SEARCH REPORT

Information on patent family members

International application No.

PCT/AU2010/000151

This Annex lists the known "A" publication level patent family members relating to the patent documents cited in the above-mentioned international search report. The Australian Patent Office is in no way liable for these particulars which are merely given for the purpose of information.

Patent Document Cited in Search Report		Patent Family Member					
US	6644421	NONE					
SU	956743	NONE					
WO	2006024111	AU	2005256104	AU	2006100113	AU	2010200162
		BR	PI0515621	CA	2559030	MX	2007002643
		US	2007282533	US	7584055	US	2009314545
		ZA	200701750				

Due to data integration issues this family listing may not include 10 digit Australian applications filed since May 2001.

END OF ANNEX

REFLEX EXHIBIT 1013 - 147/432

(12) INNOVATION PATENT (11) Application No. **AU 2009100636 A4**
(19) AUSTRALIAN PATENT OFFICE

(54) Title
A Modular Orientation Unit for Use in a Variety of Mining Tools

(51) International Patent Classification(s)
E21B 47/024 (2006.01) ***E21B 47/02*** (2006.01)
E21B 47/00 (2006.01) ***G06F 19/00*** (2006.01)

(21) Application No: **2009100636** (22) Date of Filing: **2009.07.01**

(45) Publication Date: **2009.08.13**
(45) Publication Journal Date: **2009.08.13**
(45) Granted Journal Date: **2009.08.13**

(71) Applicant(s)
Reservoir Nominees Pty Ltd

(72) Inventor(s)
Kleyn, Nick

(74) Agent / Attorney
Elliptic Legal & Patent Services, Suite 6 Level 1 447 Hay Street, Perth, WA, 6000

2009100636 01 Jul 2009

Abstract

A modular tool (10) comprising an orientation unit (12), at least one attachment unit (16, 18) adapted to be connected to the orientation unit (12), and a data acquisition device (14). The orientation unit (12) is adapted to be retrieved from a borehole by way of the at least one attachment unit (16, 18). An operational unit (19) is adapted to be connected to either the orientation unit (12) or one of the at least one attachment units (16, 18) to obtain at least one measurement representative of the orientation of the operational unit (19), or an aspect thereof, and communicate the at least one measurement to the data acquisition device (14).

REFLEX EXHIBIT 1013 - 149/432

2009100636 01 Jul 2009

1/3

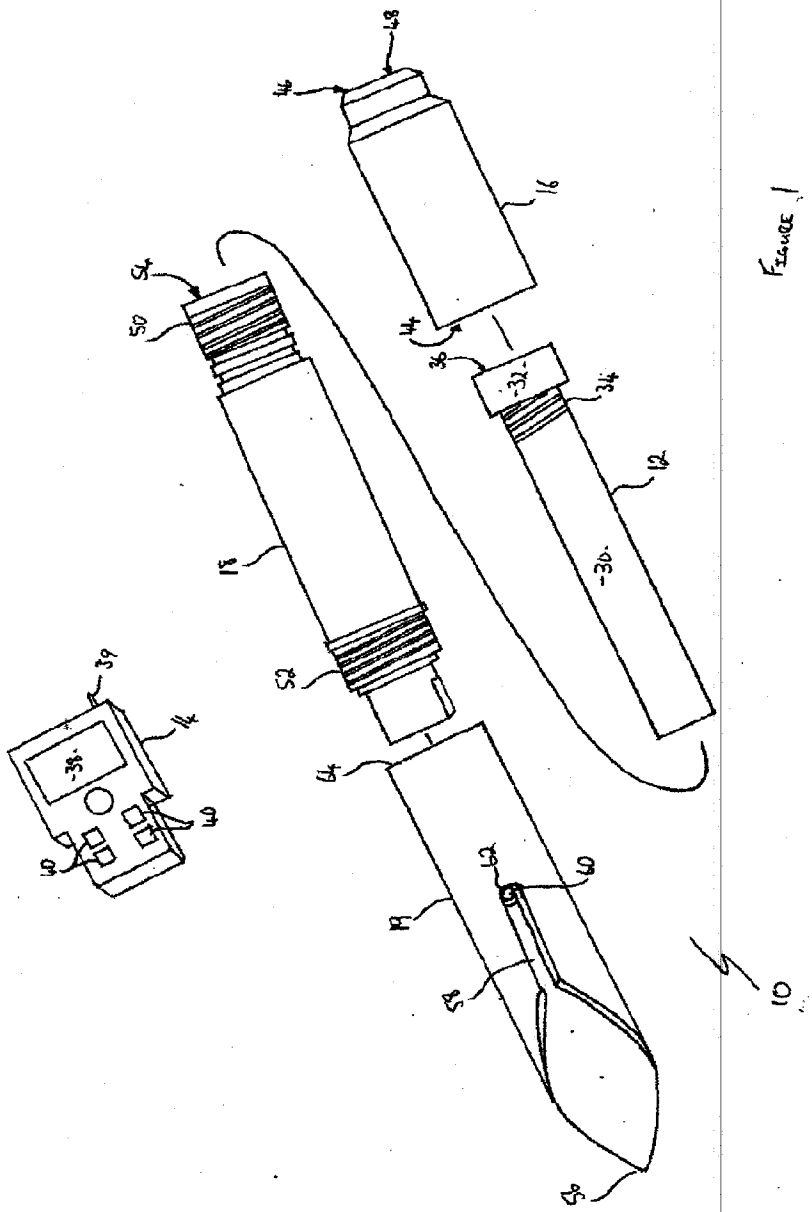

FIGURE 1

2009100636 01 Jul 2009

"A Modular Orientation Unit for Use in a Variety of Mining Tools"

FIELD OF THE INVENTION

The invention relates to a modular orientation unit for use in a variety of mining tools.

BACKGROUND TO THE INVENTION

The following discussion of the background to the invention is intended to facilitate an understanding of the present invention. However, it should be appreciated that the discussion is not an acknowledgment or admission that any of the material referred to was published, known or part of the common general knowledge in any jurisdiction as at the priority date of the application.

Mining tools are expensive. At the same time, a large number of mining tools are designed to take the same measurements in different environments. One such measurement is orientation which is the crucial measurement in determining the orientation of the core, the orientation of downhole devices and the direction of drilling of a borehole.

However, in situations such as determining the orientation of downhole devices, it is preferable that the unit have a weight which allows for ease of transport while still having sufficient mass to facilitate insertion through obstacles, such as sludge, that may be present in the borehole. In contrast, when being used for core orientation, it is preferable that the unit have sufficient protection to withstand the rigors of drilling. Thus, in two applications requiring orientation there are two different requirements set by the different operational environments of the tools.

It is an object of the present invention to provide a modular orientation unit which has the capability of being used in a variety of mining tools.

SUMMARY OF THE INVENTION

Throughout this document, unless otherwise indicated to the contrary, the terms "comprising", "consisting of", and the like, are to be construed as non-exhaustive, or in other words, as meaning "including, but not limited to".

In accordance with a first aspect of the invention there is a modular tool comprising:

- an orientation unit;

REFLEX EXHIBIT 1013 - 151/432

2009100636 01 Jul 2009

- at least one attachment unit adapted to be connected to the orientation unit; and
- a data acquisition device,.

where the orientation unit is adapted to be retrieved from a borehole by way of the at least one attachment unit and an operational unit is adapted to be connected to either the orientation unit or one of the at least one attachment units to obtain at least one measurement representative of the orientation of the operational unit or an aspect thereof and communicate the at least one measurement to the data acquisition device.

A further advantage of this arrangement is that if there is an electronic failure of the orientation unit, it can be returned back to base far cheaper than the total unit. To elaborate, a full device is likely to weight in excess of 10-15 kilograms. A pair of orientation units, however, weighs approximately 0.5 kilograms.

The operational unit may be a mill shoe, a core barrel or a borehole tool.

Preferably, the orientation unit is able to determine the orientation of the operational unit or an aspect thereof by way of a plurality of accelerometers. Ideally, such accelerometers are tri-axially arranged within the orientation unit.

One of the at least one attachment units may be a casing. The casing may encapsulate, either in itself or in conjunction with other attachment units, the orientation unit. The casing may also vary in size to facilitate connection with drill strings of various sizes.

The data acquisition device is preferably a handheld unit with a display. The orientation measurements communicated to the data acquisition device from the orientation unit are displayed to a driller by way of the display.

In a variation on the above processing, the measurements communicated to the data acquisition device may be the raw gravitational measurements taken by the accelerometers. A processing unit inside the data acquisition device may process such raw gravitational measurements to produce a single orientation measurement.

The data acquisition device may be in real-time communication with the orientation unit. This may be achieved by a wireline or wireless means. Alternatively, the orientation unit may operate to store measurements and correlate actions taken using the data acquisition device against the stored measurements on retrieval of the modular tool.

REFLEX EXHIBIT 1013 - 152/432

2009100636 01 Jul 2009

BRIEF DESCRIPTION OF THE DRAWINGS

The invention will now be described, by way of example only, with reference to the accompanying drawings, in which:

Figure 1 is an isometric view of a modular tool in accordance with a first embodiment of the present invention adapted for determining the direction of drilling of a borehole.

Figure 2 is a schematic representation of an orientation unit used in the modular tool shown in Figure 1.

Figure 3 is an isometric view of a modular tool in accordance with a second embodiment of the present invention adapted for determining core orientation.

PREFERRED EMBODIMENTS OF THE INVENTION

In accordance with a first embodiment of the invention there is a modular tool 10 for determining the current drilling direction of a borehole 2. The modular tool 10 comprises an orientation unit 12, a handset 14, an attachment unit 16 and a casing 18.

The orientation unit 12 comprises three accelerometers 20, a processing unit 22, a memory 24 and a communications system 26. The accelerometers 20, processing unit 22, memory 24 and communications system 26 are all mounted on a mainboard 28.

The accelerometers 20 are organised tri-axially. This allows each accelerometer to measure gravitational force along two of the *x*, *y* and *z* axes. This also provides for one redundant or verifying measurement for each such axes.

The accelerometers 20 are also in data and control communication with the processing unit 22 by way of the mainboard 28. This allows measurement values taken by the accelerometers 20 to be communicated to the processing unit 22.

The processing unit 22 is also in data and control communication with the memory 24 and the communications system 26. The memory 24 holds software code that controls the functionality of the orientation unit 12, including code for transforming the measurement values taken by the accelerometers into an orientation measurement. As such code would be known to the person skilled in the art, it will not be described in more detail here.

2009100636 01 Jul 2009

The communications system 26 is, as mentioned above, operable to be controlled by the processing unit 22. The communications system 26 allows for data, including orientation measurements, to be communicated from the orientation unit 12 to the handset 14.

Each element of the orientation unit 12 mentioned above is housed in a tubular housing 30. The tubular housing 30 is elongated with an enlarged head portion 32. Positioned just below the enlarged head portion 32 is a threaded portion 34. The threaded portion 34 allows for a secure threaded connection to be made with the casing 18. The tubular housing 30 has a glass window 36 which looks into the enlarged head portion 32 to display the components contained in the orientation unit 12.

The handset 14 consists of a liquid-crystal display 38, a communication system 39 and a plurality of control buttons 40. The role of the control buttons 40 and the effect the pressing of such buttons 40 have on the information displayed on the liquid-crystal display 38 will be described in more detail below.

The attachment unit 16 is cylindrical. At one end 42 of the attachment unit is a hollow cavity 44. The hollow cavity 44 has a threaded portion (not shown) which allows for a secure threaded connection to be made with the casing 18.

At a second end 46 of the attachment unit 16 is a second hollow cavity 48. This hollow cavity 48 also has a threaded portion (not shown) to facilitate a second threaded connection between the attachment unit 16 and a wireline.

The casing 18 has a first threaded end 50 and a second threaded end 52. The first threaded end 50 is sized and shaped to provide a secure threaded connection with the attachment unit 16. The second threaded end 52 is sized and shaped to provide a secure threaded connection with the mill shoe 19.

A hollow cavity 54 extends through the casing 18 from the first threaded end 50. The hollow cavity 54 also has a threaded portion (not shown). This threaded portion facilitates a further threaded connection between the casing 18 and the orientation unit 12.

The mill shoe 19 comprises a hollow cylindrical tube which is cut-away to provide a pointed end 56. A channel 58 is provided in the side of the tube opposite the pointed end 56. Positioned within the mill shoe 19 is a recess (not shown). This recess is

2009100636 01 Jul 2009

adapted to receive a pin 60. When so received, the pin 60 extends through the channel 58 at a position near its closed end 62.

An end 64 of the mill shoe 19 has a hollow cavity with a threaded portion (not shown). The threaded portion allows for a secure threaded connection to be made with the casing 18.

The orientation unit 12, handset 14, attachment unit 16 and casing 18 will be described in more detail in the context of its use as described below.

A real-time communication session is established between the orientation unit 12 and the handset 14 by way of communication systems 26 and 39.

The orientation unit 12 is then threadedly connected to the casing 18. Once so connected, the enlarged head portion 32 extends out from the casing 18, with the remainder being received therein. In this position, it is still possible to see the internal components of the orientation unit 12 through glass window 36.

The mill shoe 19 is then threadedly connected to the casing 18. The pin 62 is then inserted into its recess.

A hole is then drilled in the side wall of a drill string (not shown). The hole needs to be at least equal in size to the pin 62. Preferably, the hole is such that the pin 62 is firmly received therein during drilling.

With the pin 62 creating a non-rotating connection between the modular tool 10 and the drill string, the drill string is rotated until the pin 62 points towards a known reference orientation, in this case top-dead centre. Once this position is reached, a driller then pushes a first control button 40 to indicate that the current orientation measurement should be treated as a zero-reference measurement. The liquid-crystal display 38 will then operate to show the current orientation measurement as 0°.

At the same time, an internal timer (not shown) within the handset 14 is synchronised with an internal timer (also not shown) within the orientation unit 12.

The attachment unit 16 is then threadedly connected to the casing 18. Once so connected, the orientation unit 12 is completely enclosed by the threaded combination of the casing 18 and the attachment unit 16. This also terminates the real-time communication session between the orientation unit 12 and the handset 14.

REFLEX EXHIBIT 1013 - 155/432

2009100636 01 Jul 2009

The attachment unit 16 is then connected to a wireline (not shown) to facilitate later retrieval and reinsertion of the tool 10.

The driller can then commence drilling of the borehole with the modular tool 10 connected thereto. The process of drilling will not be described in more detail here, except as is relevant to the invention, as such a process would be known to the person skilled in the art.

It should be noted however, that every ten seconds following synchronisation of the two timers, the orientation unit 12 operates to determine its current orientation and stores such orientation measurements in memory 24.

When the driller wants to change the direction of drilling, he presses a second control button 40 on the handset 14 to take an orientation measurement of the assembled tool. Upon pressing the second control button 40, the liquid-crystal display operates to display to the driller that they should wait a predetermined length of time before resuming drilling or otherwise altering the position of the drill string. Also, on detecting the pressing of the second control button 40, the handset operates to record the current time value recorded by the handset's 14 internal timer. This value is stored for later reference.

As normal operation sees the driller only require a single measurement, following pressing of the second control button 40, it is expected that the driller will the retrieve the tool 10 via the wireline.

Following retrieval, the tool 10 is partially disassembled to expose the glass window 36. Once exposed, a second real-time communication session is established between the orientation unit 12 and the handset 14 by way of communication systems 26, 39.

The liquid-crystal display 38 then awaits the pressing of a further control button 40. Once so pressed, the handset 14 makes a request of the orientation tool 12 to provide it with the orientation measurement taken at the time recorded when the second control button 40 was pressed. On receipt of this measurement, it is displayed to the driller by way of the liquid-crystal display 38. The driller may then rotate the drill string as required until the desired direction (as an angle measurement) is reached. Drilling may then recommence in the new direction.

2009100636 01 Jul 2009

In accordance with a second embodiment of the present invention, where like numerals reference like parts, there is a modular tool 100 for determining core orientation. The modular tool 100 is identical to the modular tool 10 except for the structure of the attachment unit 16 and minor variations in the processing of orientation measurements. It should also be noted that the modular tool 100 is designed to be attached to a core barrel and not a mule shoe 19.

In this embodiment, attachment unit 102 is cylindrical. At one end 104 of the attachment unit is a hollow cavity 106. The hollow cavity 106 has a threaded portion (not shown) which allows for a secure threaded connection to be made with the casing 18.

A second end 108 of the attachment unit 102 has a threaded portion 110. The threaded portion 110 facilitates a second threaded connection between the attachment unit 102 and an overshot unit (not shown).

In place of the mule shoe 19, the second threaded end 52 of the casing 18 is sized and shaped to provide a secure threaded connection with a core barrel 112.

In use, the second embodiment of the invention operates as follows.

A real-time communication session is established between the orientation unit 12 and the handset 14 by way of communication systems 26 and 39.

The orientation unit 12 is then threadedly connected to the casing 18. Once so connected, the enlarged head portion 32 extends out from the casing 18, with the remainder being received therein. In this position, it is still possible to see the internal components of the orientation unit 12 through glass window 36.

The core barrel 112 is then threadedly connected to the casing 18.

The core barrel 112 is rotated a known reference orientation, in this case top-dead centre, is reached. The driller then pushes a first control button 40 to indicate that the current orientation measurement should be treated as a zero-reference measurement. The liquid-crystal display 38 will then operate to show the current orientation measurement as 0°.

At the same time, an internal timer (not shown) within the handset 14 is synchronised with an internal timer (also not shown) within the orientation unit 12.

2009100636 01 Jul 2009

The attachment unit 102 is then threadedly connected to the casing 18. Once so connected, the orientation unit 12 is completely enclosed by the threaded combination of the casing 18 and the attachment unit 16. This also terminates the real-time communication session between the orientation unit 12 and the handset 14.

The attachment unit 102 is then connected to an overshot (not shown). The casing 18 is further connected to a core barrel (also not shown)

The driller can then commence drilling of the borehole with the modular tool 100 connected thereto. The process of drilling will not be described in more detail here, except as is relevant to the invention, as such a process would be known to the person skilled in the art.

It should be noted however, that every ten seconds following synchronisation of the two timers, the orientation unit 12 operates to determine its current orientation and stores such orientation measurements in memory 24.

When the driller has reached the desired position for core orientation, he presses a second control button on the handset 14 to take an orientation measurement. Upon pressing the second control button 40, the liquid-crystal display operates to display to the driller that they should wait a predetermined length of time before resuming drilling or otherwise altering the position of the drill string. Also, on detecting the pressing of the second control button 40, the handset operates to record the current time value recorded by the handset's 14 internal timer. This value is stored for later reference.

As normal operation sees the driller only require a single measurement, following pressing of the second control button 40, it is expected that the driller will the retrieve the tool 100 via the overshot as would be known to the person skilled in the art.

Following retrieval, the tool 100 is partially disassembled to expose the glass window 36. Once exposed, a second real-time communication session is established between the orientation unit 12 and the handset 14 by way of communication systems 26, 39.

The liquid-crystal display 38 then awaits the pressing of a further control button 40. Once so pressed, the handset 14 makes a request of the orientation unit 12 to provide it with the orientation measurement taken at the time recorded when the second control button 40 was pressed. The handset 14 then continues a real-time measurement dialogue with the orientation unit 12. As part of this dialogue, the orientation tool 12

2009100636 01 Jul 2009

provides the handset 14 with the orientation measurement associated with the current position of the orientation unit 12. This measurement is compared to the orientation measurement taken at the time recorded so as to determine the direction the core barrel must be rotated in order to re-orient the core barrel back to its downhole position. The liquid-crystal display 38 then operates to display arrows indicative of that direction to the user until such time as re-orientation has been achieved. Once re-orientation has been achieved, the liquid-crystal display 38 operates to display a solid line around its periphery.

As is evidenced by the embodiments described above, the combination of the orientation unit 12 and the handset 14 provide a core system which can be added to with other components to meet the measurement requirements of certain mining activities. As this core includes all electronic componentry associated with the tool 10, 100, this also provides further advantages in that:

- A single handset 14 and orientation unit 12 can be used in place of multiple sole-purpose tools – hence saving on storage and transportation costs.
- The additional components needed for the modular tool 10, 100 to transform its function are low-cost items – hence reducing the overall cost of the unit in comparison to multiple sole-purpose tools.
- The use of a single handset to cover the functionality of the orientation unit 12 regardless of its current configuration increases driller familiarity with the system and decreases learning time for the driller.

It should be appreciated by the person skilled in the art that the above invention is not limited to the embodiment described. In particular, the following modifications and improvements may be made without departing from the scope of the present invention:

- The orientation unit 12 may be added to or replaced with another measuring unit designed to measure a factor other than orientation. For instance, temperature measurement units may be used in place of the orientation unit 12.
- The casing 18 may be omitted and its connective features adapted to form an integral part of the orientation unit 12. In this manner, the additional weight of the casing 18 may be foregone. Such a configuration is particularly useful when seeking to orient a borehole tool where durability of the tool is not a prime concern.

2009100636 01 Jul 2009

- In a configuration such as that described in the last bullet point, the orientation unit 12 is preferably constructed to facilitate direct connection to the borehole tool. Alternatively, if a casing 18 is used for the same function, it is preferable that the second threaded end 58 is adapted to facilitate direct connection to the borehole tool.
- The tri-axial configuration created by three accelerometers 20 as described above can be replaced by a tri-axial configuration created from two accelerometers. Of course, in doing so, the redundant or verification measurement for each axis is foregone.
- The casing 18 may vary in size. This allows a casing 18 to be selected to match the size of the drill string being employed.
- The casing may be made of metal, plastic or such other material as meets the requirements of the environmental situation in which the tool 10, 100 will operate.
- While the tool 10, 100 as described above works on a wireless non-real-time communication system, it is possible to run the system using the wireline as a real-time communications conduit. Alternatively, other real-time, wireless communication systems may be used to facilitate communication of orientation measurements.
- As an alternative method of operation to that described above, the orientation measurements need not be calculated by the orientation unit 12. In place, the raw measurement values may be recorded and, upon establishment of the subsequent real-time communication session, these raw values transferred to the handset 14. A processing unit within the handset 14 may then calculate the desired orientation measurement from these raw values.
- In a variation on the processing described above, the orientation tool 12 may be pre-configured to a reference orientation before being released to the market. This would then allow the reference orientation process described above to be omitted.
- The threaded connections used to connect the various elements of each tool may be replaced by other connecting mechanisms. For instance, bayonet fittings may be used a replacements for the threaded connectors.
- The liquid-crystal display 38 may display the orientation measurement in a variety of formats. For instance, if a desired direction has already been entered

2009100636 01 Jul 2009

into the handset, the system may provide a series of arrows showing the direction in which the drill string must be rotated in order to attain that direction rather than the current degree orientation measurement.

It should be further appreciated by the person skilled in the art that the above features, where not mutually exclusive, can be combined to form yet further embodiments within the scope of the present invention.

REFLEX EXHIBIT 1013 - 161/432

2009100636 01 Jul 2009

We Claim:

1. In accordance with a first aspect of the invention there is a modular tool comprising:

   an orientation unit;

   at least one attachment unit adapted to be connected to the orientation unit; and

   a data acquisition device,

   where the orientation unit is adapted to be retrieved from a borehole by way of the at least one attachment unit and an operational unit is adapted to be connected to either the orientation unit or one of the at least one attachment units to obtain at least one measurement representative of the orientation of the operational unit or an aspect thereof and communicate the at least one measurement to the data acquisition device.

2. A modular tool according to claim 1, where the operational unit is a mill shoe, a core barrel or a borehole tool.
3. A modular tool according to any preceding claim, where the orientation unit is able to determine the orientation of the operational unit, or an aspect thereof, by way of a plurality of accelerometers.
4. A modular tool according to claim 3, where the accelerometers are tri-axially arranged within the orientation unit.
5. A modular tool according to any preceding claim, where one of the at least one attachment units may be a casing.
6. A modular tool according to claim 5, where the casing encapsulates, either in itself or in conjunction with other attachment units, the orientation unit.
7. A modular tool according to any preceding claim, where the data acquisition device is preferably a handheld unit with a display, the orientation measurements communicated to the data acquisition device from the orientation unit operable to be displayed to a driller by way of the display.
8. A modular tool according to any preceding claim, where the measurements communicated to the data acquisition device are the raw gravitational measurements taken by the accelerometers and a processing unit inside the data acquisition device processes the raw gravitational measurements to produce a single orientation measurement.

RELEX EXHIBIT 1013 - 162/432

2009100636 01 Jul 2009

9. A modular tool according to any preceding claim, where the data acquisition device is in real-time communication with the orientation unit.
10. A modular tool, according to any one of claims 1 to 9, where the orientation unit operates to store measurements and correlate actions taken using the data acquisition device against the stored measurements on retrieval of the modular tool.

REFLEX EXHIBIT 1013 - 163/432

2009100636 01 Jul 2009

1/3

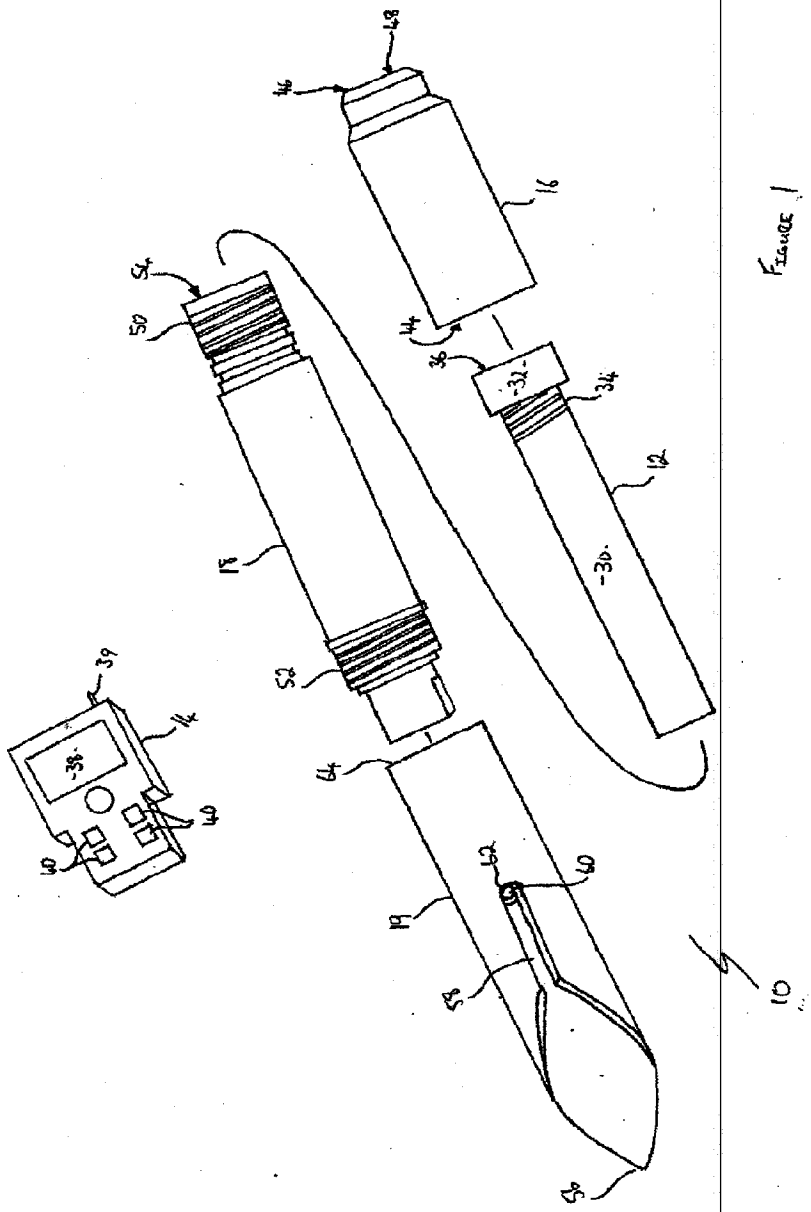

FIGURE 1

REFLEX EXHIBIT 1013 - 164/432

2009100636 01 Jul 2009

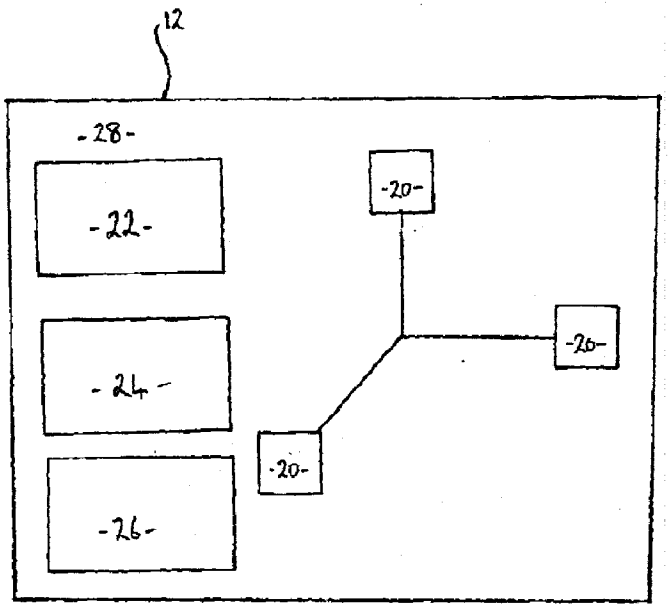

FIGURE 2

REFLEX EXHIBIT 1013 - 165/432

2009100636 01 Jul 2009

3/3

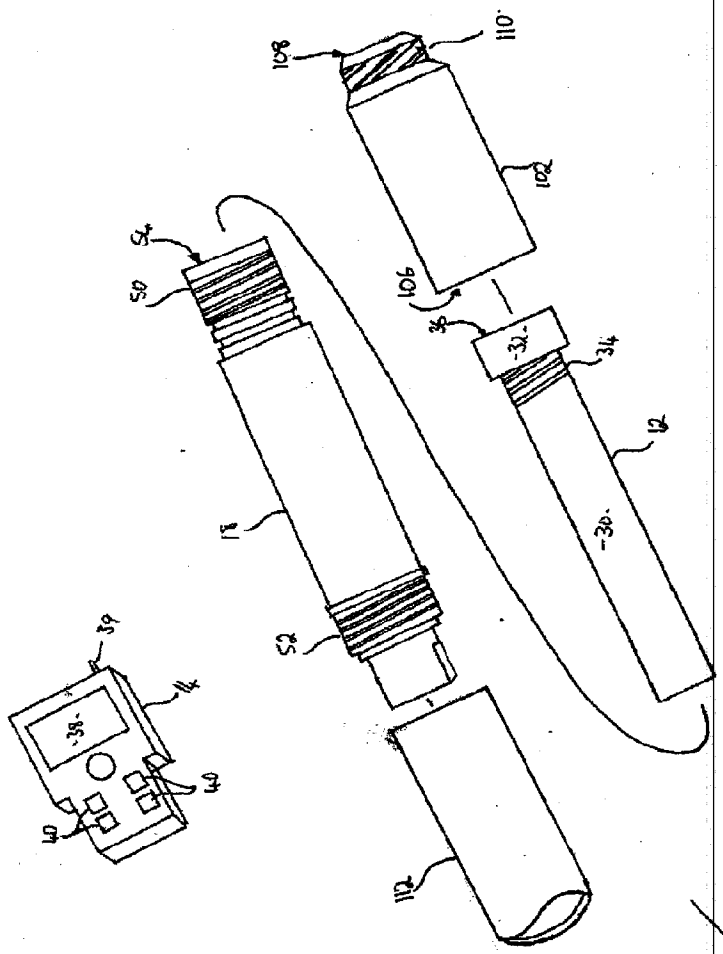

FIGURE 3

REFLEX EXHIBIT 1013 - 166/432

Office de la Propriété Intellectuelle du Canada
Un organisme d'Industrie Canada

Canadian Intellectual Property Office
An agency of Industry Canada

CA 2456506 A1 2005/01/03

(21) 2 456 506

(12) DEMANDE DE BREVET CANADIEN
CANADIAN PATENT APPLICATION

(13) A1

(22) Date de dépôt/Filing Date: 2004/02/03

(41) Mise à la disp. pub./Open to Public Insp.: 2005/01/03

(51) Cl.Int.[7]/Int.Cl.[7] E21B 49/06, E21B 25/16

(71) Demandeur/Applicant:
SCOTT, DAVE, CA

(72) Inventeur/Inventor:
SCOTT, DAVE, CA

(54) Titre : DISPOSITIF ELECTRONIQUE D'ORIENTATION DE CAROTTE
(54) Title: ELECTRONIC CORE ORIENTATION DEVICE

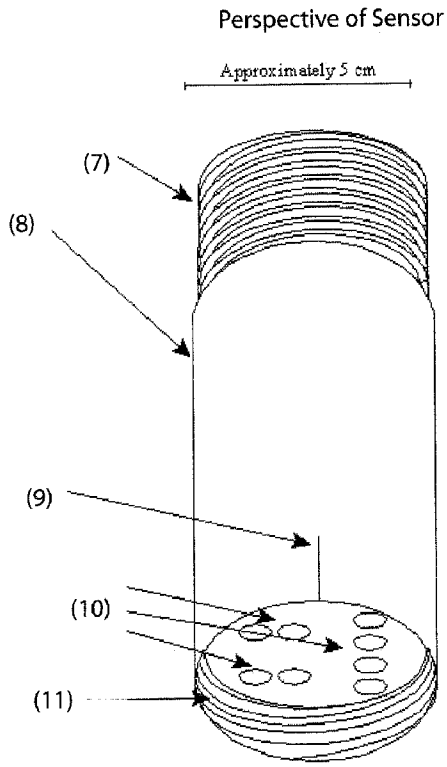

(57) Abrégé/Abstract:
This invention provides a low cost, accurate and reliable core orientation method for inclined holes. The system consists of a sensor, display unit, specialized core tube, core tube alignment clip and where necessary, a customized drill rod extension. The sensor's components are: 3-axis accelerometer, clock, power source, programming and memory circuitry, shock absorbers and data transfer system, all encased in a standard diameter core tube extension. This sensor is attached to the top of the specialized core barrel during drilling. The sensor takes readings for core rotation and core inclination data for each core run, which may be used for other survey purposes. The specialized core barrel is aligned with the sensor, to facilitate accurate marking of the retrieved core. The display unit retrieves the core orientation data from the sensor and stores it on a memory card.

REPLEX EXHIBIT 2013 LPG 167/432

Electronic Core Orientation Device

Abstract of the Disclosure:

This invention provides a low cost, accurate and reliable core orientation method for inclined holes. The system consists of a sensor, display unit, specialized core tube, core tube alignment clip and where necessary, a customized drill rod extension. The sensor's components are: 3-axis accelerometer, clock, power source, programming and memory circuitry, shock absorbers and data transfer system, all encased in a standard diameter core tube extension. This sensor is attached to the top of the specialized core barrel during drilling. The sensor takes readings for core rotation and core inclination data for each core run, which may be used for other survey purposes. The specialized core barrel is aligned with the sensor, to facilitate accurate marking of the retrieved core. The display unit retrieves the core orientation data from the sensor and stores it on a memory card.

Core Orientation Patent Application

Field of the Invention:

The invention relates to diamond drilling, and more specifically to methods and tools to obtain the original position and orientation of drill core after retrieval from the ground.

Background of the Invention:

Core orientation is needed when mines do geotechnical surveys to assess fracture patterns in rock. By determining the fracture density and orientation of the fractures, companies are better equipped to design a safe mine layout. Core orientation is done by taking a number of measurements that allow the core's original position and orientation to be known. This requires at least a core rotation measurement, which can then be constrained by a downhole survey done after the hole is completed. Other techniques also get a dip measurement in addition to the rotation measurement, which can then be used to check the survey done when the hole is finished. Surveys that check the azimuth are not as reliable, since magnetic ore often makes these readings useless. Gyroscopes cannot be used while drilling takes place because of their sensitivity. ATV's (televiewers) are sometimes used to map fractures right off the walls of the drill hole, but these instruments are costly, require the surveyor to be nearby, and the risk of losing the probe down the hole is significant. Current methods of core orientation are highly expensive, unreliable, or require high maintenance.

On inclined drill holes, these disadvantages maybe overcome by using the proposed, robust electronic sensor attached to top of the core tube, which takes readings at prescribed times.

Brief Description of the Drawings:

Figure 1: Simplified Diagram of Drill String.
Figure 2: Perspective View of the of Sensor
Figure 3: Perspective View of the Core Tube and Sensor Setup
Figure 4: Perspective View of the Display Unit

Summary of the Invention:

The purpose of this invention is to provide a low-cost, accurate and reliable core orientation method for inclined holes. The system consists of a sensor, specialized core tube, alignment clip, display unit and, where necessary, a customized drill rod extension. The sensor's components are: electronic sensor, clock, thermometer, power source, programming and memory circuitry, shock absorbers and data transfer system, all encased in a standard diameter core tube extension. This sensor is attached to the top of the specialized core tube during drilling. The electronic sensor component (a 3-axis accelerometer in the preferred embodiment) takes readings used to give the core rotation data. The sensor unit can also give a core inclination measurement for each core run which may be used for other survey purposes. The specialized core tube is aligned with the sensor, to facilitate accurate marking of the retrieved core. The display unit is a computing device, which retrieves the core orientation data from the sensor and stores it on a memory card.

The optimum setup for the system uses 1), radio transmissions between the sensor and display unit when readings are taken; 2), a 3-axis accelerometer for the sensor tool, and 3), a method for the sensor to generate its own electricity. A backup method for data transfer and battery recharge is also included, where the sensor is plugged into the display unit. This system would cost less than scribing, and be more accurate than the other methods available for inclined holes.

Detailed Description of Invention:

Core drilling (Figure 1), is accomplished by the outer tube (4), which has a steel and diamond bit screwed to the bottom (5). Within the outer tube, the inner tube, also called the core tube (3) rests just above the drill bit (5). The core tube becomes filled with core as the drill bit on the outer tube cuts through the rock. During this drilling, water is flushed down the outer tube (4) (about 20-40 liters/min). The inner tube (3) is usually about 3m long and must be retrieved after every 3m interval is drilled. To retrieve the core tube (3), the core must be broken from the bottom of the hole by pulling up on the drill string (4). A retrieval tool is lowered by wireline and latches on to the backend (1) of the core tube (3) so that the core may be lifted from the hole.

For the proposed invention, the sensor (2) has to be powered up by attaching it to a battery charger using the connections at the bottom of the sensor. Once the sensor is working, the display unit (15) can be turned on and the sensor (2) plugged in. The operator sets the clock on the display unit (15) and synchronizes the display (15) with the sensor (2). If the radio option is available on the sensor (2), this may be done without connecting the sensor (2) to the display unit (15).

The sensor (2) is attached to the top of the core tube (3), below the backend (1), aligned with a clip (12) and lowered into the hole. Drilling commences once the core tube is at the bottom of the hole, and stops once three metres of core is drilled. In the preferred embodiment of the invention, the driller enters the depth of the hole on the display unit (15) and presses the "Take Reading " button. The display unit (15) transmits a signal to the sensor (2), which takes a reading and radios the measurements to the display unit (15) for storage. In case the radio system fails, the sensor (2) also takes readings every minute, which may be downloaded to the display unit (15) once the core tube (3) and sensor (2) are retrieved. If this is the case, the driller must wait for a 2-minute interval before breaking the core and he must enter the depth and time the reading was taken on the display unit (15). The driller may then break the core and retrieve the core tube (3). The sensor reference line (9) is in line with the core tube reference lines (13,14)(marked only at the top and the bottom of the tube, to limit weakening of tube). The driller then marks the location of the reference line on the core at the bottom of the core tube. With the reference line drawn on the core, the rotation measurement can be used to determine how the core was oriented in the hole.

The sensor components are (Figure 2): silicon 3-axis accelerometer, clock, thermometer, power source, programming and memory circuitry, shock absorbers and data transfer system, all encased in a standard diameter core tube extension (likely NQ size, with a 50mm internal diameter)(8). The power source provides the electricity for the other sensor components, either with the backup battery or with its generator. The generator harnesses either water flow, an alternating magnetic field, or vibration energy in the drill string. The accelerometer measures the orientation of the earth's gravitational force with respect to the sensor. The accelerometer is aligned with a reference line (9) etched into the outside of the sensor, so that the rotation readings obtained are with respect to this reference line. The clock measures the

time at which the accelerometer took the reading. The reading the thermometer measures is used to make temperature adjustments for the accelerometer reading. The programming and circuitry process the raw accelerometer data into meaningful rotation and inclination data. The memory circuitry keeps this data in storage until no longer necessary. The data transfer system uses either radio communications, or uses the backup connectors (10) on the bottom of the sensor to communicate the data to the display unit. Two of the connection points (10) on the bottom are used for charging the battery or capacitor in the sensor before use. The shock absorbers help protect the electronic components from shocks when the core tube is dropped down the outer tube. The sensor attaches to the top of the core tube (3), just below the backend (1). The sensor is sealed so that it may go down drill holes up to 3km deep without water leaking into the electronics.

The display unit (15) components are (Figure 4): large LCD with back light (16), radio transmitter and receiver, keypad with large buttons (17), sealed memory card port (18) and battery storage, port for radio antenna (22), port for external power source (21, preferably 12V, DC), port for sensor connection/data transfer (19), and internal circuitry for data input, storage and output. The display unit is extremely rugged and is weatherproof/waterproof. Buttons include: on/off, numbers 0 to 9, decimal point, delete, enter, take reading, take test, download, light, clock, and synchronize. The LCD displays both data and instructions for operation of the device, in English, French or Spanish. All ports are sealed and protected by plugs and covers to keep them clean and dry.

The core tube (3) is a standard size and design (about 3m long, 5cm internal diameter, screw threads at either end), apart from having reference lines etched at the top (13) and the bottom (14), and having a method of aligning the core tube reference line with that of the sensor (12). The clip (12) to align the two components is preferably a low-profile steel clip with raised points that fit into indents in the sensor and core tube, that ensure alignment. Other core tube sizes are envisioned depending on the drilling requirements. The original product is for NQ size drilling, but HQ and other sizes are also planned.

An additional drill rod extension (a custom length of drill rod with screw threads at both ends) accompanies the sensor to compensate for the extra length of the core tube (3) and sensor (2) assembly.

If the radio was not used, the driller must connect the sensor (2) to the display unit (15)(which is synchronized to the sensor) to download the correct reading. The readings are stored on internal and removable memory cards, so that if power is lost, the data can be retrieved later. The removable memory card can be given to the geotechnician responsible for orienting the core. The geotechnician can make all his measurements before or after using the sensor data to properly orient his readings. If he makes his measurements with regard to the reference lines drawn on the core, his readings can be transformed in the computer. Otherwise, he can use a modified protractor and draw the oriented top line on the core and make readings off of that.

It will be apparent that the invention has been described with reference to certain details of construction and these details should be interpreted as examples and not as limitations to the scope of the invention.

Claims:

1: A tool, fitting on the top of a core tube, below the backend, with the following components:
electronic sensor component (preferably silicon 3-axis accelerometer),
clock,
thermometer
power source,
radio transmitter and receiver,
programming and memory circuitry,
shock absorbers,
data transfer system (brass connection points and/or radio) ,
standard diameter core tube extension sensor casing (NQ, HQ, BQ or other standard size), with a reference line etched on it, aligned with the accelerometer inside.

2: A tool according to claim 1, wherein the sensor takes electronic readings of the Earth's gravitational field with respect to the orientation of the sensor, processes the reading into rotation and inclination measurements, and records the time these readings were taken.

3: A tool according to claim 1 wherein the readings obtained in claim 2 may be relayed to a display unit, either by direct contact or by radio transmission.

4: A tool according to claim 1, wherein batteries power the tool or, preferably, the tool can generate its own electricity or be charged without opening the sensor.

5: A core tube with reference lines etched at the top and bottom that has been modified to allow a clip to attach onto it. (ie: it has two 3mm diameter holes drilled in the top)

6: A tool according to claim 1 that has been modified to allow a clip to attach onto it. (two 3mm diameter holes drilled in the bottom)

7: A low-profile clip with four short pegs that fits over the join between the sensor and core tube, thereby aligning the two.

8: A display unit with the following components:
large LCD with backlight,
radio transmitter and receiver,
keypad with large buttons,
sealed memory card port,
battery storage,
port for radio antenna,
port for external power source (preferably 12V, DC),
port for sensor connection and data transfer,
and internal circuitry for data input, storage and output.

9: A display unit according to claim 11, wherein the depth and time of a measurement can be entered, the sensor can be attached to the data transfer port in the display unit for purposes of data transfer and clock synchronization, and the data obtained from the sensor can be stored on internal memory circuitry and on a removable memory card.

10: A method for obtaining the orientation of drill core comprising:

Attaching and aligning an electronic sensor tool to the top of the core tube,
Drilling a core from a substrate with a diamond drill,
Recording orientation data with the electronic sensor attached to the core tube,
Removing the drill core from the ground,
Marking the reference line from the sensor on to the core,
Correlating the sensor reading with the core to obtain a rotation measurement and the orientation of the core with respect to the Earth's gravitational field.

Figure 1: Simplified Perspective of Drill String Setup

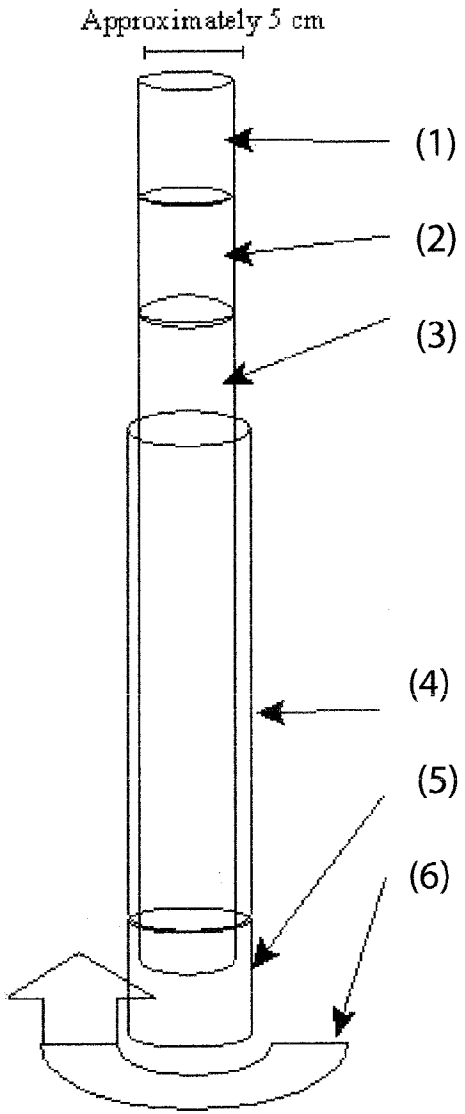

Figure 2: Perspective of Sensor

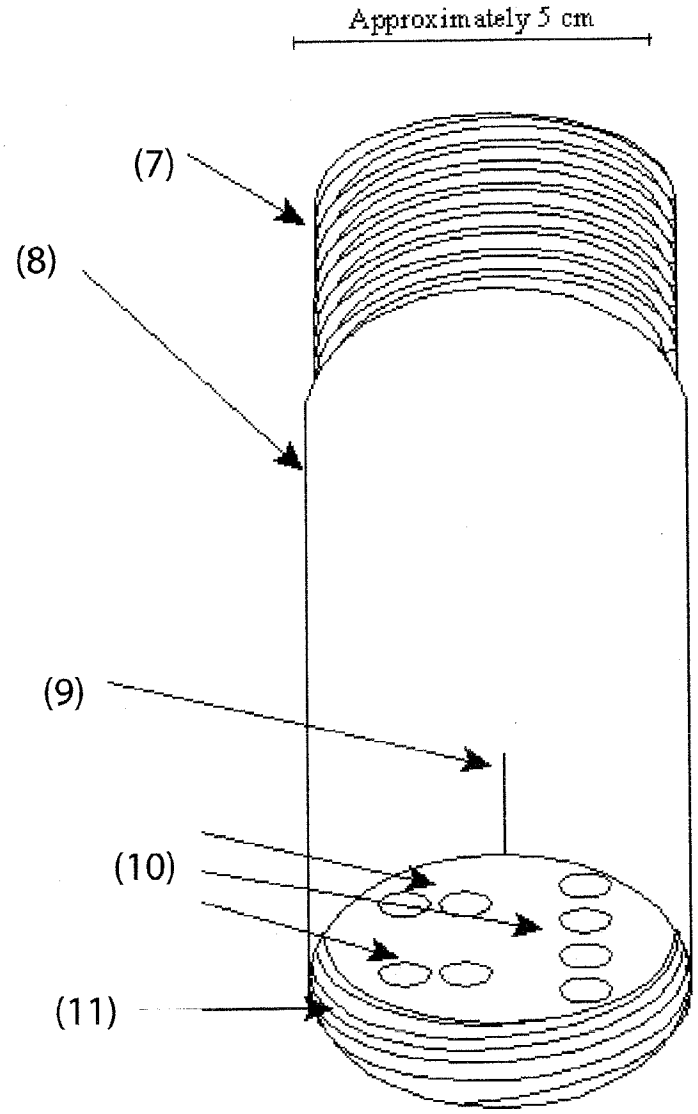

Figure 3: Core Tube and Sensor Setup

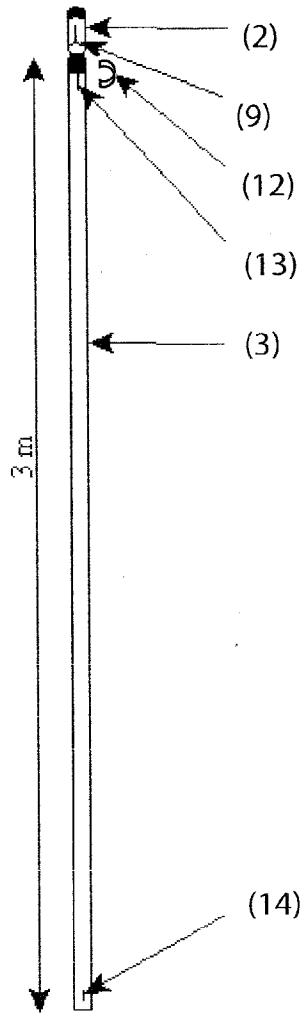

Figure 4: Perspective of the Display Unit

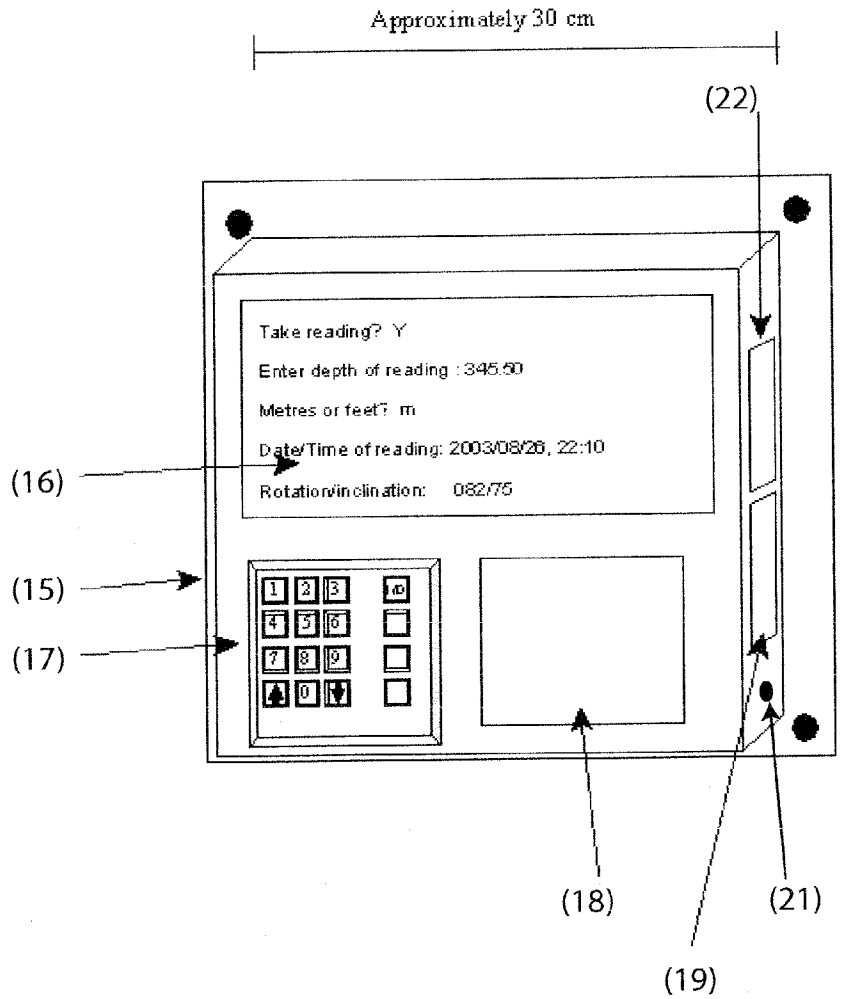

Perspective of Sensor

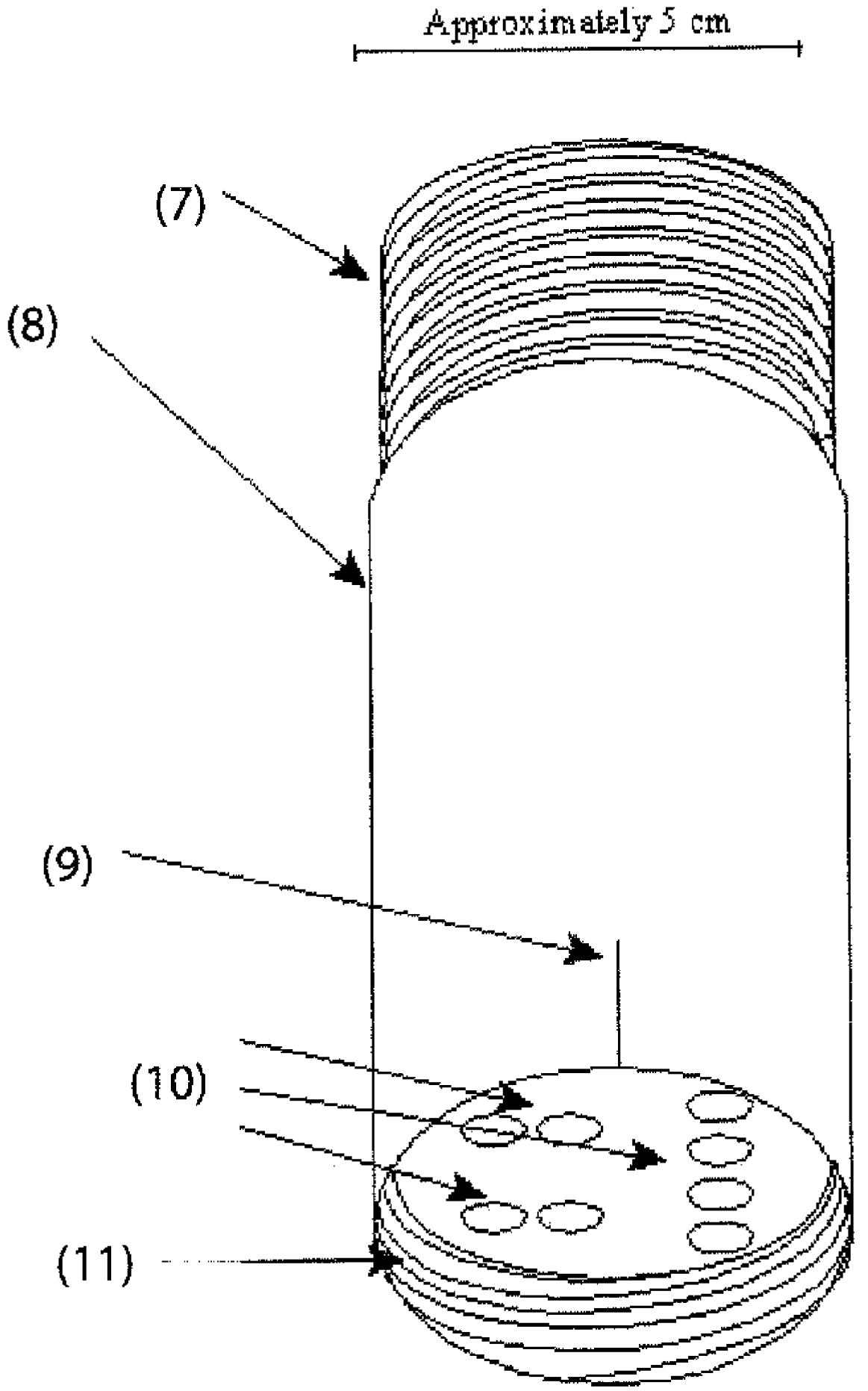

I hereby certify that this paper (along with any paper referred to as being attached or enclosed) is being transmitted via the Office electronic filing system in accordance with 37 CFR § 1.6(a)(4).

Dated: April 18, 2022
Electronic Signature for Benjamin D. Kirk /Benjamin D. Kirk/

ATTORNEY DOCKET NO. 36362.0150U5
VIA EFS-WEB
PATENT

IN THE UNITED STATES PATENT AND TRADEMARK OFFICE

In re Application of	)	
	)	
CHRISTOPHER L. DRENTH, ET AL.	)	Art Unit: 3676
	)	
Application No.: 17/082,877	)	Examiner: *Not Yet Assigned*
	)	
Filing Date: October 28, 2020	)	Confirmation No.: 1013
	)	
For: **CORE BARREL HEAD ASSEMBLYWITH AN INTEGRATED SAMPLE ORIENTATION TOOL AND SYSTEM FOR USING SAME**	)	

SUPPLEMENTAL INFORMATION DISCLOSURE STATEMENT

MAIL STOP AMENDMENT
Commissioner for Patents
P. O. Box 1450
Alexandria, VA 22313-1450

BALLARD SPAHR LLP
Customer No. 23859

April 18, 2022

Commissioner:

Pursuant to the requirements set forth in 37 C.F.R. § 1.56, Applicant now submits a list of documents known to Applicant or Applicant's attorneys. Pursuant to 37 C.F.R. § 1.98(a)(2)(iv), and for the Examiner's review, Applicant has enclosed (1) copies of documents from the prosecution of related U.S. and non-U.S. patent applications, and (2) copies of non-U.S. patents or non-U.S. patent application publications. In accordance with 37 C.F.R. § 1.98(a)(2), copies of any cited U.S. patent or U.S. patent application publication documents are not enclosed.

Applicant has enclosed an English language abstract of any non-U.S. Patent or Patent Application which is written in a foreign language.

Pursuant to 37 C.F.R. § 1.97(c), Applicant submits that this document is timely filed in that the Patent and Trademark Office has not yet mailed to Applicant a final Office Action on the merits, a notice of allowance, or other closed prosecution. Applicant submits herewith a payment of $260 in accordance with the fee for an Information Disclosure Statement for a large entity. Applicant submits that no additional fee is due; however, Applicant hereby authorizes the Commissioner to charge to Deposit Account No. 14-0629 any fee that may be required to effect the consideration and entry of this Information Disclosure Statement and List and the references contained therein.

REFLEX EXHIBIT 1013 - 179/432

Respectfully submitted,

Electronic signature: /Benjamin D. Kirk/
Benjamin D. Kirk
Registration No.: 74,848
BALLARD SPAHR LLP
Correspondence Customer Number: 23859

REFLEX EXHIBIT 1013 - 180/432

Electronic Patent Application Fee Transmittal

Application Number:	17082877
Filing Date:	28-Oct-2020
Title of Invention:	CORE BARREL HEAD ASSEMBLY WITH AN INTEGRATED SAMPLE ORIENTATION TOOL AND SYSTEM FOR USING SAME
First Named Inventor/Applicant Name:	CHRISTOPHER L. DRENTH
Filer:	Benjamin D Kirk
Attorney Docket Number:	36362.0150U5

Filed as Large Entity

Filing Fees for Utility under 35 USC 111(a)

Description	Fee Code	Quantity	Amount	Sub-Total in USD($)
Basic Filing:				
Pages:				
Claims:				
Miscellaneous-Filing:				
Petition:				
Patent-Appeals-and-Interference:				
Post-Allowance-and-Post-Issuance:				
Extension-of-Time:				

Description	Fee Code	Quantity	Amount	Sub-Total in USD($)
Miscellaneous:				
SUBMISSION- INFORMATION DISCLOSURE STMT	1806	1	260	260
		Total in USD ($)		**260**

Electronic Acknowledgement Receipt

EFS ID:	45497240
Application Number:	17082877
International Application Number:	
Confirmation Number:	1013
Title of Invention:	CORE BARREL HEAD ASSEMBLY WITH AN INTEGRATED SAMPLE ORIENTATION TOOL AND SYSTEM FOR USING SAME
First Named Inventor/Applicant Name:	CHRISTOPHER L. DRENTH
Customer Number:	23859
Filer:	Benjamin D Kirk
Filer Authorized By:	
Attorney Docket Number:	36362.0150U5
Receipt Date:	18-APR-2022
Filing Date:	28-OCT-2020
Time Stamp:	16:24:33
Application Type:	Utility under 35 USC 111(a)

Payment information:

Submitted with Payment	yes
Payment Type	CARD
Payment was successfully received in RAM	$260
RAM confirmation Number	E20224HG25214975
Deposit Account	
Authorized User	
The Director of the USPTO is hereby authorized to charge indicated fees and credit any overpayment as follows:	

File Listing:

Document Number	Document Description	File Name	File Size(Bytes)/ Message Digest	Multi Part /.zip	Pages (if appl.)
1	Information Disclosure Statement (IDS) Form (SB08)	36362_0150U5_SB08_IDS.pdf	37870 49a5ebe5634910b1a3c63cdaf4af5ee49cad5397	no	2
Warnings:					
Information:					
This is not an USPTO supplied IDS fillable form					
2	Non Patent Literature	36362_0150U5_Manual.pdf	1922756 2233e8f68c691721f500dc85151ba821b1f653b5	no	105
Warnings:					
Information:					
3	Foreign Reference	WO2012012839.pdf	1969651 1ab8e1b07495fc8d8d4806e0f47973715bc6b03c	no	26
Warnings:					
Information:					
4	Foreign Reference	WO2010091471.pdf	2268870 78d61787b74b66c1a1261e42958ede526c5331f8	no	34
Warnings:					
Information:					
5	Foreign Reference	AU2009100636.pdf	777221 e351e7184ad39e0c68e151d234199c12809ce9a2	no	19
Warnings:					
Information:					
6	Foreign Reference	CA2456506.pdf	829884 510b0d73548cad7a8a66733c12ae8ab915ef9587	no	12
Warnings:					

Information:					
7	Non Patent Literature	Evidence_In_Support_Brown_Declaration.pdf	493687 29fcfba1296bf012deebf2fa2c6d6fae503bc2e0	no	6
Warnings:					
Information:					
8	Non Patent Literature	Evidence_In-Support_Reilly_Declaration.pdf	2426975 15e34355e8c333e767b4b5d8c7d82ec459584ff8	no	9
Warnings:					
Information:					
9	Non Patent Literature	Opposition_Evidence.pdf	55091 c5b50f574f81f48048677fa36f5de3b6e5a011aa	no	1
Warnings:					
Information:					
10	Non Patent Literature	Evidence_in_Support_Second_Brown_Declaration.pdf	1849264 32cfe7e787e7a0aab817dc94e203fb567a114441	no	5
Warnings:					
Information:					
11	Transmittal Letter	36362_0150U5_Transmittalb.pdf	102635 e51e539af70a2a508d13e9097c9dbf0bb21acd06	no	2
Warnings:					
Information:					
12	Fee Worksheet (SB06)	fee-info.pdf	38031 283e665496bc575c28cd47da08520be70125bc04	no	2
Warnings:					
Information:					
			Total Files Size (in bytes):	12771935	

This Acknowledgement Receipt evidences receipt on the noted date by the USPTO of the indicated documents, characterized by the applicant, and including page counts, where applicable. It serves as evidence of receipt similar to a Post Card, as described in MPEP 503.

New Applications Under 35 U.S.C. 111
If a new application is being filed and the application includes the necessary components for a filing date (see 37 CFR 1.53(b)-(d) and MPEP 506), a Filing Receipt (37 CFR 1.54) will be issued in due course and the date shown on this Acknowledgement Receipt will establish the filing date of the application.
National Stage of an International Application under 35 U.S.C. 371
If a timely submission to enter the national stage of an international application is compliant with the conditions of 35 U.S.C. 371 and other applicable requirements a Form PCT/DO/EO/903 indicating acceptance of the application as a national stage submission under 35 U.S.C. 371 will be issued in addition to the Filing Receipt, in due course.
New International Application Filed with the USPTO as a Receiving Office
If a new international application is being filed and the international application includes the necessary components for an international filing date (see PCT Article 11 and MPEP 1810), a Notification of the International Application Number and of the International Filing Date (Form PCT/RO/105) will be issued in due course, subject to prescriptions concerning national security, and the date shown on this Acknowledgement Receipt will establish the international filing date of the application.

UNITED STATES PATENT AND TRADEMARK OFFICE
COMMISSIONER FOR PATENTS
P.O.BOX 1450
ALEXANDRIA VA 22313-1451

PRESORTED
FIRST-CLASS MAIL
U.S. POSTAGE PAID
POSTEDIGITAL
NNNNN

BALLARD SPAHR LLP
SUITE 1600
999 PEACHTREE STREET
ATLANTA, GA 30309-4421

Courtesy Reminder for
Application Serial No: 17/082,877

Attorney Docket No: 36362.0150U5
Customer Number: 23859
Date of Electronic Notification: 10/27/2021

This is a courtesy reminder that new correspondence is available for this application. If you have not done so already, please review the correspondence. The official date of notification of the outgoing correspondence will be indicated on the form PTOL-90 accompanying the correspondence.

An email notification regarding the correspondence was sent to the following email address(es) associated with your customer number:
USpatentmail@ballardspahr.com

To view your correspondence online or update your email addresses, please visit us anytime at **https://ppair-my.uspto.gov/pair/PrivatePair.**
If you have any questions, please email the Electronic Business Center (EBC) at EBC@uspto.gov or call 1-866-217-9197.

UNITED STATES PATENT AND TRADEMARK OFFICE

UNITED STATES DEPARTMENT OF COMMERCE
United States Patent and Trademark Office
Address: COMMISSIONER FOR PATENTS
P.O. Box 1450
Alexandria, Virginia 22313-1450
www.uspto.gov

APPLICATION NO.	FILING DATE	FIRST NAMED INVENTOR	ATTORNEY DOCKET NO.	CONFIRMATION NO.
17/082,877	10/28/2020	CHRISTOPHER L. DRENTH	36362.0150U5	1013

23859 7590 10/27/2021
BALLARD SPAHR LLP
SUITE 1600
999 PEACHTREE STREET
ATLANTA, GA 30309-4421

EXAMINER
WILLS III, MICHAEL R

ART UNIT	PAPER NUMBER
3676	

NOTIFICATION DATE	DELIVERY MODE
10/27/2021	ELECTRONIC

Please find below and/or attached an Office communication concerning this application or proceeding.

The time period for reply, if any, is set in the attached communication.

Notice of the Office communication was sent electronically on above-indicated "Notification Date" to the following e-mail address(es):

USpatentmail@ballardspahr.com

Office Action Summary	Application No. 17/082,877	Applicant(s) DRENTH et al.	
	Examiner MICHAEL R WILLS III	Art Unit 3676	AIA (FITF) Status Yes

-- The MAILING DATE of this communication appears on the cover sheet with the correspondence address --

Period for Reply

A SHORTENED STATUTORY PERIOD FOR REPLY IS SET TO EXPIRE 3 MONTHS FROM THE MAILING DATE OF THIS COMMUNICATION.

- Extensions of time may be available under the provisions of 37 CFR 1.136(a). In no event, however, may a reply be timely filed after SIX (6) MONTHS from the mailing date of this communication.
- If NO period for reply is specified above, the maximum statutory period will apply and will expire SIX (6) MONTHS from the mailing date of this communication.
- Failure to reply within the set or extended period for reply will, by statute, cause the application to become ABANDONED (35 U.S.C. § 133). Any reply received by the Office later than three months after the mailing date of this communication, even if timely filed, may reduce any earned patent term adjustment. See 37 CFR 1.704(b).

Status

1)☑ Responsive to communication(s) filed on 28 October 2020.

☐ A declaration(s)/affidavit(s) under **37 CFR 1.130(b)** was/were filed on _____.

2a)☐ This action is **FINAL.** 2b) ☑ This action is non-final.

3)☐ An election was made by the applicant in response to a restriction requirement set forth during the interview on _____; the restriction requirement and election have been incorporated into this action.

4)☐ Since this application is in condition for allowance except for formal matters, prosecution as to the merits is closed in accordance with the practice under *Ex parte Quayle*, 1935 C.D. 11, 453 O.G. 213.

Disposition of Claims*

5) ☑ Claim(s) 1-2 is/are pending in the application.

5a) Of the above claim(s) _____ is/are withdrawn from consideration.

6) ☐ Claim(s) _____ is/are allowed.

7) ☑ Claim(s) 1-2 is/are rejected.

8) ☐ Claim(s) _____ is/are objected to.

9) ☐ Claim(s) _____ are subject to restriction and/or election requirement

* If any claims have been determined allowable, you may be eligible to benefit from the **Patent Prosecution Highway** program at a participating intellectual property office for the corresponding application. For more information, please see http://www.uspto.gov/patents/init_events/pph/index.jsp or send an inquiry to **PPHfeedback@uspto.gov.**

Application Papers

10)☐ The specification is objected to by the Examiner.

11)☑ The drawing(s) filed on 28 October 2020 is/are: a)☐ accepted or b)☑ objected to by the Examiner.

Applicant may not request that any objection to the drawing(s) be held in abeyance. See 37 CFR 1.85(a).

Replacement drawing sheet(s) including the correction is required if the drawing(s) is objected to. See 37 CFR 1.121(d).

Priority under 35 U.S.C. § 119

12)☐ Acknowledgment is made of a claim for foreign priority under 35 U.S.C. § 119(a)-(d) or (f).

Certified copies:

a)☐ All b)☐ Some** c)☐ None of the:

1.☐ Certified copies of the priority documents have been received.

2.☐ Certified copies of the priority documents have been received in Application No. _____.

3.☐ Copies of the certified copies of the priority documents have been received in this National Stage application from the International Bureau (PCT Rule 17.2(a)).

** See the attached detailed Office action for a list of the certified copies not received.

Attachment(s)

1) ☐ Notice of References Cited (PTO-892)

2) ☑ Information Disclosure Statement(s) (PTO/SB/08a and/or PTO/SB/08b) Paper No(s)/Mail Date _____.

3) ☐ Interview Summary (PTO-413) Paper No(s)/Mail Date _____.

4) ☐ Other: _____.

DETAILED ACTION

Notice of Pre-AIA or AIA Status

1. The present application, filed on or after March 16, 2013, is being examined under the first inventor to file provisions of the AIA.

Drawings

2. The drawings are objected to as failing to comply with 37 CFR 1.84(p)(5) because they include the following reference character(s) not mentioned in the description: threaded proximal end 62.

3. The drawings are objected to as failing to comply with 37 CFR 1.84(p)(5) because they include the following reference character(s) not mentioned in the description: light emitters 82.

Corrected drawing sheets in compliance with 37 CFR 1.121(d), or amendment to the specification to add the reference character(s) in the description in compliance with 37 CFR 1.121(b) are required in reply to the Office action to avoid abandonment of the application. Any amended replacement drawing sheet should include all of the figures appearing on the immediate prior version of the sheet, even if only one figure is being amended. Each drawing sheet submitted after the filing date of an application must be labeled in the top margin as either "Replacement Sheet" or "New Sheet" pursuant to 37 CFR 1.121(d). If the changes are not accepted by the examiner, the applicant will be notified and informed of any required corrective action in the next Office action. The objection to the drawings will not be held in abeyance.

Claim Rejections - 35 USC § 112

4. The following is a quotation of 35 U.S.C. 112(b):

> (b) CONCLUSION.—The specification shall conclude with one or more claims particularly pointing out and distinctly claiming the subject matter which the inventor or a joint inventor regards as the invention.

The following is a quotation of 35 U.S.C. 112 (pre-AIA), second paragraph:

> The specification shall conclude with one or more claims particularly pointing out and distinctly claiming the subject matter which the applicant regards as his invention.

5. Claim 2 is rejected under 35 U.S.C. 112(b) or 35 U.S.C. 112 (pre-AIA), second paragraph, as being indefinite for failing to particularly point out and distinctly claim the subject matter which the inventor or a joint inventor (or for applications subject to pre-AIA 35 U.S.C. 112, the applicant), regards as the invention.

6. Claim 2 is ambiguous and confusing and is rendered indefinite. Line 8, states "an open and threaded distal end portion", however this limitation is not further limiting an element. In other words, the phrase "an open and threaded distal end portion" does not correspond to an associated element and the examiner cannot reasonable determine the corresponding element.

Claim Rejections - 35 USC § 102

7. The following is a quotation of the appropriate paragraphs of 35 U.S.C. 102 that form the basis for the rejections under this section made in this Office action:

> A person shall be entitled to a patent unless –
>
> (a)(1) the claimed invention was patented, described in a printed publication, or in public use, on sale, or otherwise available to the public before the effective filing date of the claimed invention.

8. **Claim 1 is rejected under 35 U.S.C. 102(a)(1) as being anticipated by Beach et al. WO 2008/113127 (Beach).**

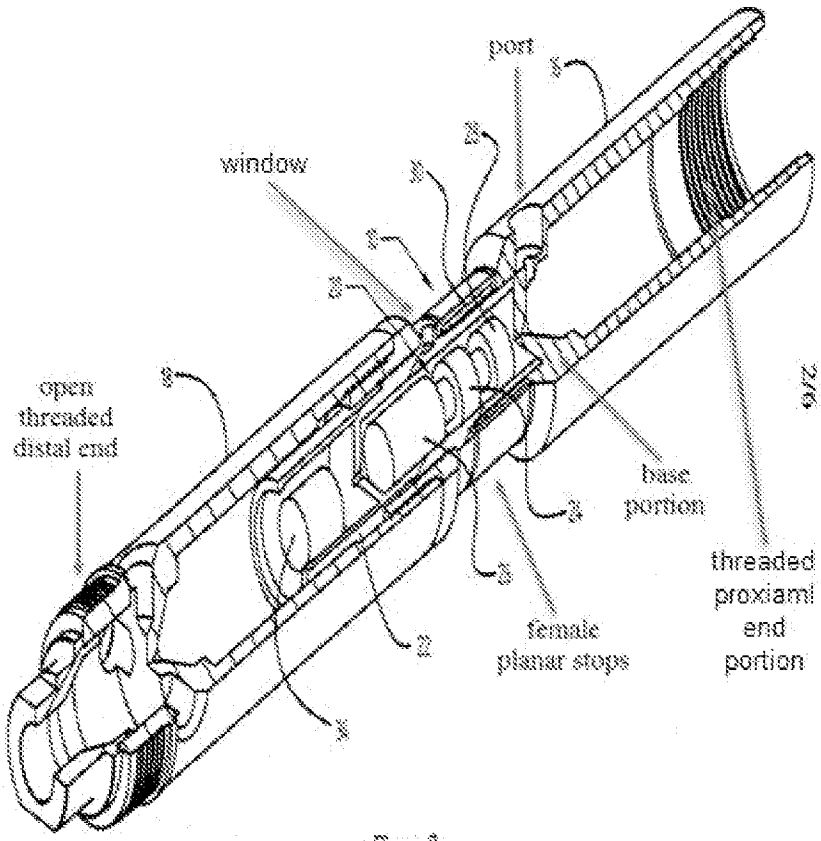

Figure 2

9. Regarding claim 1, Beach discloses a core barrel head assembly having an exterior surface and comprising: a first interior cavity **(16)**; a sealed interior cavity **(18)** spaced distally from the first interior cavity and having a closed proximal end **(illustrated in Fig. 2 above adjacent base portion)**; a threaded proximal end portion **(illustrated in Fig. 2 above)** for coupling to a wire line retrieval portion of a head assembly, wherein the first interior cavity **(16)** extends distally from the threaded proximal end portion; a window **(illustrated in Fig. 2 above)** that extends from the exterior surface into optical communication with the sealed interior cavity; at least one electronic instrument **(20)** that is configured to obtain core orientation data **(pg. 11, lines 33-36)**, wherein the at least one electronic instrument comprises at least one digital and/or electro-mechanical sensor in a core orientation data recording tool **(pg. 12, lines 7-21)**; and a transmitter **(28, 30)** configured to transmit core orientation data **(pg. 12, lines 25-28)**, wherein

the sealed interior cavity is sized and shaped to enclose the at least one electronic instrument **(Fig. 2)**.

Double Patenting

10. The nonstatutory double patenting rejection is based on a judicially created doctrine grounded in public policy (a policy reflected in the statute) so as to prevent the unjustified or improper timewise extension of the "right to exclude" granted by a patent and to prevent possible harassment by multiple assignees. A nonstatutory double patenting rejection is appropriate where the conflicting claims are not identical, but at least one examined application claim is not patentably distinct from the reference claim(s) because the examined application claim is either anticipated by, or would have been obvious over, the reference claim(s). See, e.g., *In re Berg*, 140 F.3d 1428, 46 USPQ2d 1226 (Fed. Cir. 1998); *In re Goodman*, 11 F.3d 1046, 29 USPQ2d 2010 (Fed. Cir. 1993); *In re Longi*, 759 F.2d 887, 225 USPQ 645 (Fed. Cir. 1985); *In re Van Ornum*, 686 F.2d 937, 214 USPQ 761 (CCPA 1982); *In re Vogel*, 422 F.2d 438, 164 USPQ 619 (CCPA 1970); *In re Thorington*, 418 F.2d 528, 163 USPQ 644 (CCPA 1969).

A timely filed terminal disclaimer in compliance with 37 CFR 1.321(c) or 1.321(d) may be used to overcome an actual or provisional rejection based on nonstatutory double patenting provided the reference application or patent either is shown to be commonly owned with the examined application, or claims an invention made as a result of activities undertaken within the scope of a joint research agreement. See MPEP § 717.02 for applications subject to examination under the first inventor to file provisions of the AIA as explained in MPEP § 2159. See MPEP § 2146 *et seq.* for applications not subject to examination under the first inventor to file provisions of the AIA. A terminal disclaimer must be signed in compliance with 37 CFR 1.321(b).

The USPTO Internet website contains terminal disclaimer forms which may be used. Please visit www.uspto.gov/patent/patents-forms. The filing date of the application in which the form is filed determines what form (e.g., PTO/SB/25, PTO/SB/26, PTO/AIA/25, or PTO/AIA/26) should be used. A web-based eTerminal Disclaimer may be filled out completely online using web-screens. An eTerminal Disclaimer that meets all requirements is auto-processed and approved immediately upon submission. For more information about eTerminal Disclaimers, refer to www.uspto.gov/patents/process/file/efs/guidance/eTD-info-I.jsp.

11. Claims 1-2 are rejected on the ground of nonstatutory double patenting as being unpatentable over claims 1 and 21 of U.S. Patent No. 10047581. Although the claims at issue are not identical, they are not patentably distinct from each other because both claims disclose a core barrel head assembly, with a first interior cavity, a sealed interior cavity, a threaded proximal end, a port, a window, an one electronic instrument, transmitter and check valve.

Allowable Subject Matter

12. Claim 2 would be allowable if rewritten to overcome the rejection(s) under 35 U.S.C. 112(b) or 35 U.S.C. 112 (pre-AIA), 2nd paragraph, set forth in this Office action and to include all of the limitations of the base claim and any intervening claims.

Conclusion

13. Any inquiry concerning this communication or earlier communications from the examiner should be directed to MICHAEL R WILLS III whose telephone number is (571)272-5521. The examiner can normally be reached Monday-Friday 8:30am to 5:00pm.

Examiner interviews are available via telephone, in-person, and video conferencing using a USPTO supplied web-based collaboration tool. To schedule an interview, applicant is

encouraged to use the USPTO Automated Interview Request (AIR) at http://www.uspto.gov/interviewpractice.

If attempts to reach the examiner by telephone are unsuccessful, the examiner's supervisor, Waseem Moorad can be reached on 5712703436. The fax phone number for the organization where this application or proceeding is assigned is 571-273-8300.

Information regarding the status of published or unpublished applications may be obtained from Patent Center. Unpublished application information in Patent Center is available to registered users. To file and manage patent submissions in Patent Center, visit: https://patentcenter.uspto.gov. Visit https://www.uspto.gov/patents/apply/patent-center for more information about Patent Center and https://www.uspto.gov/patents/docx for information about filing in DOCX format. For additional questions, contact the Electronic Business Center (EBC) at 866-217-9197 (toll-free). If you would like assistance from a USPTO Customer Service Representative, call 800-786-9199 (IN USA OR CANADA) or 571-272-1000.

/MICHAEL R WILLS III/
Primary Examiner, Art Unit 3676

Search Notes	Application/Control No.	Applicant(s)/Patent Under Reexamination
	17/082,877	DRENTH et al.
	Examiner	**Art Unit**
	MICHAEL R WILLS III	3676

CPC - Searched*		
Symbol	**Date**	**Examiner**
E21B25/16	10/22/2021	MW

CPC Combination Sets - Searched*		
Symbol	**Date**	**Examiner**

US Classification - Searched*			
Class	**Subclass**	**Date**	**Examiner**

* See search history printout included with this form or the SEARCH NOTES box below to determine the scope of the search.

Search Notes		
Search Notes	**Date**	**Examiner**
See East Search History	10/22/2021	MW
Forward/Backward Search	10/22/2021	MW
Inventor Name Search	10/22/2021	MW

Interference Search			
US Class/CPC Symbol	**US Subclass/CPC Group**	**Date**	**Examiner**

Bibliographic Data

Application No: 17/082,877

Foreign Priority claimed: ○ Yes ◉ No

35 USC 119 (a-d) conditions met: ☐ Yes ☑ No ☐ Met After Allowance

Verified and Acknowledged: /MICHAEL R WILLS III/ [ ]

Examiner's Signature | Initials

Title: CORE BARREL HEAD ASSEMBLY WITH AN INTEGRATED SAMPLE ORIENTATION TOOL AND SYSTEM FOR USING SAME

FILING or 371(c) DATE	CLASS	GROUP ART UNIT	ATTORNEY DOCKET NO.
10/28/2020	175	3676	36362.0150U5
RULE			

APPLICANTS

LONGYEAR TM, INC., Salt Lake City, UT,

GLOBALTECH CORPORATION PTY LTD, CANNING VALE, WA,

INVENTORS

CHRISTOPHER L. DRENTH, Burlington, CANADA

Gordon Stewart, Claremont, AUSTRALIA

Khaled Hejleh, Peppermint Grove, AUSTRALIA

CONTINUING DATA

This application is a CON of 16588026 09/30/2019 PAT 10830013

16588026 is a CON of 16017334 06/25/2018 PAT 10465463

16017334 is a CON of 14692484 04/21/2015 PAT 10047581

14692484 has PRO of 61982052 04/21/2014

FOREIGN APPLICATIONS

IF REQUIRED, FOREIGN LICENSE GRANTED**

11/24/2020

STATE OR COUNTRY

CANADA

ADDRESS

BALLARD SPAHR LLP
SUITE 1600
999 PEACHTREE STREET
ATLANTA, GA 30309-4421
UNITED STATES

FILING FEE RECEIVED

$1,820

ALL REFERENCES CONSIDERED EXCEPT WHERE LINED THROUGH. /M.R.W/

I hereby certify that this paper (along with any paper referred to as being attached or enclosed) is being transmitted via the Office electronic filing system in accordance with 37 CFR § 1.6(a)(4).

Dated: February 4, 2021
Electronic Signature for Benjamin D. Kirk /Benjamin D. Kirk/

ATTORNEY DOCKET NO. 36362.0150U5
VIA EFS-WEB
PATENT

IN THE UNITED STATES PATENT AND TRADEMARK OFFICE

In re Application of	)	
	)	
CHRISTOPHER L. DRENTH, ET AL.	)	Art Unit: 3676
	)	
Application No.: 17/082,877	)	Examiner: *Not Yet Assigned*
	)	
Filing Date: October 28, 2020	)	Confirmation No.: 1013
	)	
For: **CORE BARREL HEAD ASSEMBLYWITH AN INTEGRATED SAMPLE ORIENTATION TOOL AND SYSTEM FOR USING SAME**	)	

INFORMATION DISCLOSURE STATEMENT

MAIL STOP AMENDMENT
Commissioner for Patents
P. O. Box 1450
Alexandria, VA 22313-1450

BALLARD SPAHR LLP
Customer No. 23859

February 4, 2021

Commissioner:

Pursuant to the requirements set forth in 37 C.F.R. § 1.56, Applicant now submits a list of documents known to Applicant or Applicant's attorneys. Pursuant to 37 C.F.R. § 1.98(a)(2)(iv), and for the Examiner's review, Applicant has enclosed (1) copies of documents from the prosecution of related U.S. and non-U.S. patent applications, and (2) copies of non-U.S. patents or non-U.S. patent application publications. In accordance with 37 C.F.R. § 1.98(a)(2), copies of any cited U.S. patent or U.S. patent application publication documents are not enclosed.

Applicant has enclosed an English language abstract of any non-U.S. Patent or Patent Application which is written in a foreign language.

In accordance with 37 C.F.R. § 1.98(d), those documents which are marked with a double asterisk (**) next to the Cite No. in the attached form PTO/SB/08 are not supplied because they were previously cited by or submitted to the Office in prior application numbers 14/692,484 filed April 21, 2015, 16/017,334 filed June 25, 2018, and 16/588,02, filed 09-30-2019 and relied upon in this application for an earlier filing date under 35 U.S.C. 120.

Regarding the documents from the prosecution of related U.S. and non-U.S. patent applications, Applicant notes that 37 C.F.R. § 1.98(b) does not mention, and thus does not require, that Applicant provide any particular set of identifying information. While 37 C.F.R. § 1.98(a)(1) requires Applicant to provide a

REFLEX EXHIBIT 1013 - 199/432

list of such documents, it does not require Applicant to include in that list specific identifying information. 37 C.F.R. § 1.98(a)(2)(iv) further requires Applicant to provide a copy of such documents. Thus, the rules do not require that Applicant provide any particular set of information about these documents prior to the Examiner's consideration of all the cited information. Nevertheless, in order to be as helpful as possible, Applicant has provided (a) information regarding the source of the documents, and (b) a title or description of each document. Accordingly, in the list required by 37 C.F.R. § 1.98(a)(1), Applicant has identified the prosecution record of U.S. and non-U.S. patent applications as the source for each document. The information provided mirrors the requirements for cited U.S. and non-U.S. patent applications as set forth by 37 C.F.R. § 1.98(b).

Applicant respectfully requests consideration of all documents submitted in the present Information Disclosure Statement and List and entry into the record for the present application.

Applicant would like to bring to the Examiner's attention the existence of the following U.S patent applications.

INFORMATION DISCLOSURE STATEMENT for Application No. 16/588,026 (Attorney Docket No. 36362.0150U4) Disclosure of U.S. Patent Applications				
Examiner's Initials	**App. No. (Pub./Patent No.)**	**Filing Date (Pub./Issue Date)**	**1st Named Inventor (Applicant)**	**Attorney Docket No.**
	61/982,052	04/21/2014	Christopher L. Drenth	36362.0150U1-
	14/692,484 (10,047,581)	04/21/2015 (8/14/2018)	Christopher L. Drenth	36362.0150U2-
	16/017,334 (10,465,463)	06/25/2018 (11/5/2019)	Christopher L. Drenth	36362.0150U3
	16/588,026 (10,830,013)	09-30-2019 (11-10-2020)	Christopher L. Drenth	36362.0150U4

Applicants would like to bring to the Examiner's attention the existence of the following non-U.S. patent applications.

INFORMATION DISCLOSURE STATEMENT for Application No. 16/017,334 (Attorney Docket No. 36362.0150U3) Disclosure of Non-U.S. Patent Applications					
Examiner's Initials	**Country**	**Application No. (Publication No.)**	**Filing Date**	**1st Named Inventor (Applicant)**	**Attorney Docket No.**
	AU	2015249889	04/21/2015	Longyear TM, Inc.	36362.0150AU1

INFORMATION DISCLOSURE STATEMENT for Application No. 16/017,334 (Attorney Docket No. 36362.0150U3) Disclosure of Non-U.S. Patent Applications					
Examiner's Initials	**Country**	**Application No. (Publication No.)**	**Filing Date**	**1st Named Inventor (Applicant)**	**Attorney Docket No.**
	AU	2019257536 (AU 2015249889)	4/21/2015 (11/14/2019)	Longyear TM, Inc.	36362.0150AU2
	BR	BR112016024554.7	04/21/2015	Longyear TM, Inc.	36362.0150BR1
	CA	2946574	04/21/2015	Longyear TM, Inc.	36362.0150CA1
	CL	2016-002684	04/21/2015	Longyear TM, Inc.	36362.0150CL1
	CN	2015800211077	04/21/2015	Longyear TM, Inc.	36362.0150CN1
	EP	15782230.5 (EP 3134600)	04/21/2015 (9/4/2019)	Longyear TM, Inc.	36362.0150EP1
	EP	19188334.7	4/21/2015	Longyear TM, Inc.	36362.0150EP2
	PCT	PCT/US2015/026907 (WO2015/164394)	04/21/2015 (10/29/2015)	Longyear TM, Inc.	36362.0150P1-
	PE	2111-2016	04/21/2015	Longyear TM, Inc.	36362.0150PE1
	ZA	2016/07259	04/21/2015	Longyear TM, Inc.	36362.0150ZA1

Pursuant to 37 C.F.R. § 1.97(b)(3), Applicant submits that this document is timely filed in that the Patent and Trademark Office has not yet mailed to Applicant a first Office Action on the merits. Applicant submits that no fee is due; however, Applicant hereby authorizes the Commissioner to charge to Deposit Account No. 14-0629 any fee that may be required to effect the consideration and entry of this Information Disclosure Statement and List and the references contained therein.

Respectfully submitted,

Electronic signature: /Benjamin D. Kirk/
Benjamin D. Kirk
Registration No.: 74,848
BALLARD SPAHR LLP
Correspondence Customer Number: 23859

/MICHAEL R WILLS III/ 10/22/2021

ALL REFERENCES CONSIDERED EXCEPT WHERE LINED THROUGH. /M.R.W/
17/082,877 02/04/2021

PTO/SB/08a (07-09)
Approved for use through 11/30/2020. OMB 0651-0031
U.S. Patent and Trademark Office; U.S. DEPARTMENT OF COMMERCE
Under the Paperwork Reduction Act of 1995, no persons are required to respond to a collection of information unless it contains a valid OMB control number.

Substitute for form 1449/PTO

INFORMATION DISCLOSURE STATEMENT BY APPLICANT

(Use as many sheets as necessary)

Sheet	1	of	5

Complete if Known	
Application Number	17/082,877
Filing Date	October 28, 2020
First Named Inventor	Christopher L. Drenth
Art Unit	3676
Examiner Name	Not Yet Assigned
Attorney Docket Number	36362.0150U5

U. S. PATENT DOCUMENTS

Examiner Initials*	Cite No.[1]	Document Number Number-Kind Code[2] (if known)	Publication Date MM-DD-YYYY	Name of Patentee or Applicant of Cited Document	Pages, Columns, Lines, Where Relevant Passages or Relevant Figures Appear
	A	US-2,944,792-A	07-12-1960	Gros	
	B	US-4,955,438	09-11-1990	Juergens et al.	
	C	US-5,601,152	02-11-1997	Harrison	
	D	US-6,732,818	05-11-2004	Gregory	
	E	US-7,296,638	11-20-2007	Beach et al.	
	F	US-10,047,581	08-14-2018	Drenth et al.	
	G	US-10,465,463	11-05-2019	Drenth et al.	
	H	US-2012/0145461-A1	06-14-2012	Cravatte	
	I	US-2015/0300162-A1	10-22-2015	Drenth et al.	
	J	US-2018/0305995-A1	10-25-2018	Drenth et al.	

FOREIGN PATENT DOCUMENTS

Examiner Initials*	Cite No.[1]	Foreign Patent Document Country Code[3] Number[4] Kind Code[5] (if known)	Publication Date MM-DD-YYYY	Name of Patentee or Applicant of Cited Document	Pages, Columns, Lines, Where Relevant Passages Or Relevant Figures Appear	T[6]
	A**	AU-2015249889-B2	08-01-2019	Globaltech Corp Pty Ltd		
	B**	CN-101649727-A	02-17-2010	Univ China Mining		
	C**	CN-201396092-Y	02-03-2010	Univ China Mining		
	D**	EP-2134921-A1	12-23-2009	2iC Australia Pty Ltd.		
	E	EP-3134600	03-01-2017	Longyear Tm, Inc		
	F**	GB-2243173-A	10-23-1991	Seafloors Eng Inc		
	G**	WO-2006/024111	03-09-2006	AUSTRALIAN MUD COMPANY LTD		

Examiner Signature		Date Considered	

*EXAMINER: Initial if reference considered, whether or not citation is in conformance with MPEP 609. Draw line through citation if not in conformance and not considered. Include copy of this form with next communication to applicant. [1] Applicant's unique citation designation number (optional). [2] See Kinds Codes of USPTO Patent Documents at www.uspto.gov or MPEP 901.04. [3] Enter Office that issued the document, by the two-letter code (WIPO Standard ST.3). [4] For Japanese patent documents, the indication of the year of the reign of the Emperor must precede the serial number of the patent document. [5] Kind of document by the appropriate symbols as indicated on the document under WIPO Standard ST.16 if possible. [6] Applicant is to place a check mark here if English language Translation is attached.

I hereby certify that this paper (along with any paper referred to as being attached or enclosed) is being transmitted via the Office electronic filing system in accordance with 37 C.F.R. § 1.6(a)(4).

Dated: February 4, 2021 Electronic Signature: /Benjamin D. Kirk/ (Benjamin D. Kirk)

ALL REFERENCES CONSIDERED EXCEPT WHERE LINED THROUGH. /M.R.W/
17/082,877 07/22/2021

PTO/SB/08a (07-09)
Approved for use through 11/30/2020. OMB 0651-0031
U.S. Patent and Trademark Office; U.S. DEPARTMENT OF COMMERCE
Under the Paperwork Reduction Act of 1995, no persons are required to respond to a collection of information unless it contains a valid OMB control number.

Substitute for form 1449/PTO

INFORMATION DISCLOSURE STATEMENT BY APPLICANT

(Use as many sheets as necessary)

Sheet	2	of	5

Complete if Known	
Application Number	17/082,877
Filing Date	October 28, 2020
First Named Inventor	Christopher L. Drenth
Art Unit	3676
Examiner Name	Not Yet Assigned
Attorney Docket Number	36362.0150U5

U. S. PATENT DOCUMENTS

Examiner Initials*	Cite No.[1]	Document Number Number-Kind Code[2] (if known)	Publication Date MM-DD-YYYY	Name of Patentee or Applicant of Cited Document	Pages, Columns, Lines, Where Relevant Passages or Relevant Figures Appear

FOREIGN PATENT DOCUMENTS

Examiner Initials*	Cite No.[1]	Foreign Patent Document Country Code[3] Number[4] Kind Code[5] (if known)	Publication Date MM-DD-YYYY	Name of Patentee or Applicant of Cited Document	Pages, Columns, Lines, Where Relevant Passages Or Relevant Figures Appear	T[6]
	H**	WO-2007/104103-A1	09-20-2007	2ic Australia Pty Ltd,		
	I**	WO-2007/137356	12-06-2007	2IC AUSTRALIA PTY LTD		
	J**	WO-2008/113127-A1	09-25-2008	2ic Australia Pty Ltd,		
	K**	WO-2010/094060	08-26-2010	IMDEX TECHNOLOGY AUSTRALIA PTY		
	L**	WO-2013/040641	03-28-2013	IMDEX GLOBAL BV		
	M**	WO-2013/126955	09-06-2013	GLOBALTECH CORP PTY LTD		

Examiner Signature		Date Considered	

*EXAMINER: Initial if reference considered, whether or not citation is in conformance with MPEP 609. Draw line through citation if not in conformance and not considered. Include copy of this form with next communication to applicant. [1] Applicant's unique citation designation number (optional). [2] See Kinds Codes of USPTO Patent Documents at www.uspto.gov or MPEP 901.04. [3] Enter Office that issued the document, by the two-letter code (WIPO Standard ST.3). [4] For Japanese patent documents, the indication of the year of the reign of the Emperor must precede the serial number of the patent document. [5] Kind of document by the appropriate symbols as indicated on the document under WIPO Standard ST.16 if possible. [6] Applicant is to place a check mark here if English language Translation is attached.

ALL REFERENCES CONSIDERED EXCEPT WHERE LINED THROUGH. /M.R.W/

PTO/SB/08a (07-09)
Approved for use through 11/30/2020. OMB 0651-0031
U.S. Patent and Trademark Office; U.S. DEPARTMENT OF COMMERCE
Under the Paperwork Reduction Act of 1995, no persons are required to respond to a collection of information unless it contains a valid OMB control number.

Substitute for form 1449/PTO

INFORMATION DISCLOSURE STATEMENT BY APPLICANT

(Use as many sheets as necessary)

Sheet	3	of	5

Complete if Known	
Application Number	17/082,877
Filing Date	October 28, 2020
First Named Inventor	Christopher L. Drenth
Art Unit	3676
Examiner Name	Not Yet Assigned
Attorney Docket Number	36362.0150U5

U. S. PATENT DOCUMENTS

Examiner Initials*	Cite No.[1]	Document Number Number-Kind Code[2] (if known)	Publication Date MM-DD-YYYY	Name of Patentee or Applicant of Cited Document	Pages, Columns, Lines, Where Relevant Passages or Relevant Figures Appear

FOREIGN PATENT DOCUMENTS

Examiner Initials*	Cite No.[1]	Foreign Patent Document Country Code[3] Number[4] Kind Code[5] (if known)	Publication Date MM-DD-YYYY	Name of Patentee or Applicant of Cited Document	Pages, Columns, Lines, Where Relevant Passages Or Relevant Figures Appear	T[6]
	N**	WO-2014/053012-A1	04-10-2014	Minnovare Pty Ltd		
	O**	WO-2014/089618	06-19-2014	2IC AUSTRALIA PTY LTD		
	P**	WO-2015/164394-A1	10-29-2015	Longyear Tm, Inc		

Examiner Signature		Date Considered	

*EXAMINER: Initial if reference considered, whether or not citation is in conformance with MPEP 609. Draw line through citation if not in conformance and not considered. Include copy of this form with next communication to applicant. [1] Applicant's unique citation designation number (optional). [2] See Kinds Codes of USPTO Patent Documents at www.uspto.gov or MPEP 901.04. [3] Enter Office that issued the document, by the two-letter code (WIPO Standard ST.3). [4] For Japanese patent documents, the indication of the year of the reign of the Emperor must precede the serial number of the patent document. [5] Kind of document by the appropriate symbols as indicated on the document under WIPO Standard ST.16 if possible. [6] Applicant is to place a check mark here if English language Translation is attached.

ALL REFERENCES CONSIDERED EXCEPT WHERE LINED THROUGH. /M.R.W/

PTO/SB/08b (07-09)
Approved for use through 11/30/2020. OMB 0651-0031
U.S. Patent and Trademark Office; U.S. DEPARTMENT OF COMMERCE
Under the Paperwork Reduction Act of 1995, no persons are required to respond to a collection of information unless it contains a valid OMB control number.

Substitute for form 1449/PTO

INFORMATION DISCLOSURE STATEMENT BY APPLICANT

(Use as many sheets as necessary)

Sheet	4	of	5

Complete if Known	
Application Number	17/082,877
Filing Date	October 28, 2020
First Named Inventor	Christopher L. Drenth
Art Unit	3676
Examiner Name	Not Yet Assigned
Attorney Docket Number	36362.0150U5

NON PATENT LITERATURE DOCUMENTS

Examiner Initials*	Cite No.[1]	Include name of the author (in CAPITAL LETTERS), title of the article (when appropriate), title of the item (book, magazine, journal, serial, symposium, catalog, etc.), date, page(s), volume-issue number(s), publisher, city and/or country where published.	T[2]
	A**	International Search Report and Written Opinion were mailed on 7/24/2015 by the International Searching Authority for International Application No. PCT/US2015/026907, filed on 4/21/2015 and published as WO 2015/164394 on 10/29/2015 (Applicant- Longyear TM, Inc.) (Attorney Docket36362.0150P1) (11 Pages)	
	B**	International Preliminary Report on Patentability was mailed on 10/25/2016 by the International Searching Authority for International Application No. PCT/US2015/026907, filed on 4/21/2015 and published as WO 2015/164394 on 10/29/2015 (Applicant- Longyear TM, Inc.) (Attorney Docket36362.0150P1) (9 Pages)	
	C**	Third Party Observations dated August 17, 2016 for International Patent Application No. PCT/US2015/026907 (Applicant- Longyear TM, Inc.) (42 pages)	
	D**	Examination Report was issued on 8/14/2018 by the Australian Patent Office for AU Application No. 2015249889, which was filed on 4/21/2015 (Applicant- Longyear TM, Inc.) (Attorney Docket No.- 36362.0150AU1) (3 pages)	
	E	Notice of Acceptance was issued on 7/23/2019 by the Australian Patent Office for AU Application No. 2015249889, which was filed on 4/21/2015 (Applicant- Longyear TM, Inc.) (Attorney Docket No.- 36362.0150AU1) (3 pages)	
	F**	Office Action was issued on 7/11/2018 by the Chilean Patent Office for CL Application No. 2016-002684, which was filed on 4/21/2015 (Applicant- Longyear TM, Inc.) (Attorney Docket No.- 36362.0150CL1) (3 pages)	
	G**	First Office Action was issued on 9/10/2018 by the SIPO for CN Application No.2015800211077, filed on 4/21/2015 and published CN 107109899 as 8/29/2017 on (Applicant- Longyear TM, Inc.) (Attorney Docket 36362.0150CN1) (5 Pages)	
	H**	Second Office Action was issued on 1/19/2020 by the SIPO for CN Application No.2015800211077, filed on 4/21/2015 and published CN 107109899 as 8/29/2017 on (Applicant- Longyear TM, Inc.) (Attorney Docket 36362.0150CN1) (6 Pages)	
	I**	Extended European Search Report issued on 10/17/2017 by the European Patent Office for Application No. 15782230.5, which was filed on April 21, 2015 and published as EP 3134600 on March 1, 2017 (Inventor- Drenth et al.; Applicant- Longyear TM, Inc.) (Attorney Docket No.- 36362.0150EP1) (9 pages)	
	J**	Preliminary Amendment was mailed on 2/28/2017 to the USPTO for U.S. Application No. 14/692,484, which was filed on April 21, 2015 and granted as 10,047,581 on 8/14/2018 (Inventor- Drenth et al.; Applicant- Longyear TM, Inc.) (Attorney Docket No.- 36362.0150U2) (7 pages)	

Examiner Signature		Date Considered	

*EXAMINER: Initial if reference considered, whether or not citation is in conformance with MPEP 609. Draw line through citation if not in conformance and not considered. Include copy of this form with next communication to applicant.

[1] Applicant's unique citation designation number (optional). [2] Applicant is to place a check mark here if English language Translation is attached.

ALL REFERENCES CONSIDERED EXCEPT WHERE LINED THROUGH. /M.R.W/
17/082,877 10/22/2021

PTO/SB/08b (07-09)
Approved for use through 11/30/2020. OMB 0651-0031
U.S. Patent and Trademark Office; U.S. DEPARTMENT OF COMMERCE
Under the Paperwork Reduction Act of 1995, no persons are required to respond to a collection of information unless it contains a valid OMB control number.

Substitute for form 1449/PTO

INFORMATION DISCLOSURE STATEMENT BY APPLICANT

(Use as many sheets as necessary)

Sheet	5	of	5

Complete if Known	
Application Number	17/082,877
Filing Date	October 28, 2020
First Named Inventor	Christopher L. Drenth
Art Unit	3676
Examiner Name	Not Yet Assigned
Attorney Docket Number	36362.0150U5

NON PATENT LITERATURE DOCUMENTS

Examiner Initials*	Cite No.[1]	Include name of the author (in CAPITAL LETTERS), title of the article (when appropriate), title of the item (book, magazine, journal, serial, symposium, catalog, etc.), date, page(s), volume-issue number(s), publisher, city and/or country where published.	T[2]
	K**	Non Final Rejection was issued on 8/18/2017 by the USPTO for U.S. Application No. 14/692,484, which was filed on April 21, 2015 and granted as 10,047,581 on 8/14/2018 (Inventor- Drenth et al.; Applicant- Longyear TM, Inc.) (Attorney Docket No.- 36362.0150U2) (7 pages)	
	L**	Response to Non Final Rejection was mailed on 10/18/2017 to the USPTO for U.S. Application No. 14/692,484, which was filed on April 21, 2015 and granted as 10,047,581 on 8/14/2018 (Inventor-Drenth et al.; Applicant- Longyear TM, Inc.) (Attorney Docket No.- 36362.0150U2) (9 pages)	
	M**	Notice of Allowance was issued on 11/8/2017 by the USPTO for U.S. Application No. 14/692,484, which was filed on April 21, 2015 and granted as 10,047,581 on 8/14/2018 (Inventor- Drenth et al.; Applicant- Longyear TM, Inc.) (Attorney Docket No.- 36362.0150U2) (5 pages)	
	N**	Notice of Allowance was issued on 4/12/2018 by the USPTO for U.S. Application No. 14/692,484, which was filed on April 21, 2015 and granted as 10,047,581 on 8/14/2018 (Inventor- Drenth et al.; Applicant- Longyear TM, Inc.) (Attorney Docket No.- 36362.0150U2) (7 pages)	
	O**	Issue Notification was issued on 7/25/2018 by the USPTO for U.S. Application No. 14/692,484, which was filed on April 21, 2015 and granted as 10,047,581 on 8/14/2018 (Inventor- Drenth et al.; Applicant- Longyear TM, Inc.) (Attorney Docket No.- 36362.0150U2) (1 page)	
	P**	Non Final Rejection was issued on 3/14/2019 by the USPTO for U.S. Application No. 16/017,334, filed on 6/25/2018 and granted as 10,465,463 on 11/5/2019 (Inventor-CHRISTOPHER L. DRENTH) (Attorney Docket 36362.0150U3) (11 Pages)	
	Q**	Response Non Final Rejection was mailed on 6/12/2019 to the USPTO for U.S. Application No. 16/017,334, filed on 6/25/2018 and granted as 10,465,463 on 11/5/2019 (Inventor-CHRISTOPHER L. DRENTH) (Attorney Docket 36362.0150U3) (9 Pages)	
	R**	Notice of Allowance was issued on 3/14/2019 by the USPTO for U.S. Application No. 16/017,334, filed on 6/25/2018 and granted as 10,465,463 on 11/5/2019 (Inventor-CHRISTOPHER L. DRENTH) (Attorney Docket 36362.0150U3) (5 Pages)	
	S**	Issue Notification was issued on 3/14/2019 by the USPTO for U.S. Application No. 16/017,334, filed on 6/25/2018 and granted as 10,465,463 on 11/5/2019 (Inventor-CHRISTOPHER L. DRENTH) (Attorney Docket 36362.0150U3) (1 Page)	
	T**	"Devicore BBT Directional Core Drilling Borehole Planning Service" Retrieved from the Internet:URL:http://www.devico.com/products/devicore-bbt [stored on the Wayback Machine on February 14, 2014]	

Examiner Signature	/MICHAEL R WILLS III/	Date Considered	10/22/2021

*EXAMINER: Initial if reference considered, whether or not citation is in conformance with MPEP 609. Draw line through citation if not in conformance and not considered. Include copy of this form with next communication to applicant.

[1] Applicant's unique citation designation number (optional). [2] Applicant is to place a check mark here if English language Translation is attached.

PTO/SB/08a (07-09)
Approved for use through 11/30/2020. OMB 0651-0031
U.S. Patent and Trademark Office; U.S. DEPARTMENT OF COMMERCE
Under the Paperwork Reduction Act of 1995, no persons are required to respond to a collection of information unless it contains a valid OMB control number.

Substitute for form 1449/PTO

INFORMATION DISCLOSURE STATEMENT BY APPLICANT

(Use as many sheets as necessary)

Sheet	1	of	2

Complete if Known	
Application Number	17/082,877
Filing Date	October 28, 2020
First Named Inventor	Christopher L. Drenth
Art Unit	3676
Examiner Name	Not Yet Assigned
Attorney Docket Number	36362.0150U5

U. S. PATENT DOCUMENTS

Examiner Initials*	Cite No.[1]	Document Number Number-Kind Code[2] (if known)	Publication Date MM-DD-YYYY	Name of Patentee or Applicant of Cited Document	Pages, Columns, Lines, Where Relevant Passages or Relevant Figures Appear
	A	US4955438A	09-11-1990	Juergens	

FOREIGN PATENT DOCUMENTS

Examiner Initials*	Cite No.[1]	Foreign Patent Document Country Code[3] Number[4] Kind Code[5] (if known)	Publication Date MM-DD-YYYY	Name of Patentee or Applicant of Cited Document	Pages, Columns, Lines, Where Relevant Passages Or Relevant Figures Appear	T[6]
	A	WO2008113127A1	03-09-2008	Beach et al.		
	B	WO2013126955A1	02-27-2013	Hejleh et al.		

Examiner Signature	/MICHAEL R WILLS III/	Date Considered	10/22/2021

*EXAMINER: Initial if reference considered, whether or not citation is in conformance with MPEP 609. Draw line through citation if not in conformance and not considered. Include copy of this form with next communication to applicant. [1] Applicant's unique citation designation number (optional). [2] See Kinds Codes of USPTO Patent Documents at www.uspto.gov or MPEP 901.04. [3] Enter Office that issued the document, by the two-letter code (WIPO Standard ST.3). [4] For Japanese patent documents, the indication of the year of the reign of the Emperor must precede the serial number of the patent document. [5] Kind of document by the appropriate symbols as indicated on the document under WIPO Standard ST.16 if possible. [6] Applicant is to place a check mark here if English language Translation is attached.

I hereby certify that this paper (along with any paper referred to as being attached or enclosed) is being transmitted via the Office electronic filing system in accordance with 37 C.F.R. § 1.6(a)(4).

Dated: July 23, 2021 Electronic Signature: /Benjamin D. Kirk/ (Benjamin D. Kirk)

ALL REFERENCES CONSIDERED EXCEPT WHERE LINED THROUGH. /M.R.W/

PTO/SB/08b (07-09)
Approved for use through 11/30/2020. OMB 0651-0031
U.S. Patent and Trademark Office; U.S. DEPARTMENT OF COMMERCE
Under the Paperwork Reduction Act of 1995, no persons are required to respond to a collection of information unless it contains a valid OMB control number.

Substitute for form 1449/PTO

INFORMATION DISCLOSURE STATEMENT BY APPLICANT

(Use as many sheets as necessary)

Sheet	2	of	2

Complete if Known	
Application Number	17/082,877
Filing Date	October 28, 2020
First Named Inventor	Christopher L. Drenth
Art Unit	3676
Examiner Name	Not Yet Assigned
Attorney Docket Number	36362.0150U5

NON PATENT LITERATURE DOCUMENTS

Examiner Initials*	Cite No.[1]	Include name of the author (in CAPITAL LETTERS), title of the article (when appropriate), title of the item (book, magazine, journal, serial, symposium, catalog, etc.), date, page(s), volume-issue number(s), publisher, city and/or country where published.	T[2]

Examiner Signature	/MICHAEL R WILLS III/	Date Considered	10/22/2021

*EXAMINER: Initial if reference considered, whether or not citation is in conformance with MPEP 609. Draw line through citation if not in conformance and not considered. Include copy of this form with next communication to applicant.

[1] Applicant's unique citation designation number (optional). [2] Applicant is to place a check mark here if English language Translation is attached.

ALL REFERENCES CONSIDERED EXCEPT WHERE LINED THROUGH. /M.R.W/

ALL REFERENCES CONSIDERED EXCEPT WHERE LINED THROUGH. /M.R.W/

PTO/SB/08a (07-09)
Approved for use through 11/30/2020. OMB 0651-0031
U.S. Patent and Trademark Office; U.S. DEPARTMENT OF COMMERCE
Under the Paperwork Reduction Act of 1995, no persons are required to respond to a collection of information unless it contains a valid OMB control number.

Substitute for form 1449/PTO

INFORMATION DISCLOSURE STATEMENT BY APPLICANT

(Use as many sheets as necessary)

Sheet	1	of	5

Complete if Known	
Application Number	17/082,877
Filing Date	October 28, 2020
First Named Inventor	Christopher L. Drenth
Art Unit	3676
Examiner Name	Not Yet Assigned
Attorney Docket Number	36362.0150U5

U. S. PATENT DOCUMENTS

Examiner Initials*	Cite No.[1]	Document Number Number-Kind Code[2] (if known)	Publication Date MM-DD-YYYY	Name of Patentee or Applicant of Cited Document	Pages, Columns, Lines, Where Relevant Passages or Relevant Figures Appear
	A	US-2,944,792-A	07-12-1960	Gros	
	B	US-4,955,438	09-11-1990	Juergens et al.	
	C	US-5,601,152	02-11-1997	Harrison	
	D	US-6,732,818	05-11-2004	Gregory	
	E	US-7,296,638	11-20-2007	Beach et al.	
	F	US-10,047,581	08-14-2018	Drenth et al.	
	G	US-10,465,463	11-05-2019	Drenth et al.	
	H	US-2012/0145461-A1	06-14-2012	Cravatte	
	I	US-2015/0300162-A1	10-22-2015	Drenth et al.	
	J	US-2018/0305995-A1	10-25-2018	Drenth et al.	

FOREIGN PATENT DOCUMENTS

Examiner Initials*	Cite No.[1]	Foreign Patent Document Country Code[3] Number[4] Kind Code[5] (if known)	Publication Date MM-DD-YYYY	Name of Patentee or Applicant of Cited Document	Pages, Columns, Lines, Where Relevant Passages Or Relevant Figures Appear	T[6]
	A**	AU-2015249889-B2	08-01-2019	Globaltech Corp Pty Ltd		
	B**	CN-101649727-A	02-17-2010	Univ China Mining		
	C**	CN-201396092-Y	02-03-2010	Univ China Mining		
	D**	EP-2134921-A1	12-23-2009	2iC Australia Pty Ltd.		
	E	EP-3134600	03-01-2017	Longyear Tm, Inc		
	F**	GB-2243173-A	10-23-1991	Seafloors Eng Inc		
	G**	WO-2006/024111	03-09-2006	AUSTRALIAN MUD COMPANY LTD		

Examiner Signature		Date Considered	

*EXAMINER: Initial if reference considered, whether or not citation is in conformance with MPEP 609. Draw line through citation if not in conformance and not considered. Include copy of this form with next communication to applicant. [1] Applicant's unique citation designation number (optional). [2] See Kinds Codes of USPTO Patent Documents at www.uspto.gov or MPEP 901.04. [3] Enter Office that issued the document, by the two-letter code (WIPO Standard ST.3). [4] For Japanese patent documents, the indication of the year of the reign of the Emperor must precede the serial number of the patent document. [5] Kind of document by the appropriate symbols as indicated on the document under WIPO Standard ST.16 if possible. [6] Applicant is to place a check mark here if English language Translation is attached.

I hereby certify that this paper (along with any paper referred to as being attached or enclosed) is being transmitted via the Office electronic filing system in accordance with 37 C.F.R. § 1.6(a)(4).

Dated: February 4, 2021 Electronic Signature: /Benjamin D. Kirk/ (Benjamin D. Kirk)

ALL REFERENCES CONSIDERED EXCEPT WHERE LINED THROUGH. /M.R.W/
17/082,877 07/22/2021

PTO/SB/08a (07-09)
Approved for use through 11/30/2020. OMB 0651-0031
U.S. Patent and Trademark Office; U.S. DEPARTMENT OF COMMERCE
Under the Paperwork Reduction Act of 1995, no persons are required to respond to a collection of information unless it contains a valid OMB control number.

Substitute for form 1449/PTO

INFORMATION DISCLOSURE STATEMENT BY APPLICANT

(Use as many sheets as necessary)

Sheet	2	of	5

Complete if Known	
Application Number	17/082,877
Filing Date	October 28, 2020
First Named Inventor	Christopher L. Drenth
Art Unit	3676
Examiner Name	Not Yet Assigned
Attorney Docket Number	36362.0150U5

U. S. PATENT DOCUMENTS

Examiner Initials*	Cite No.[1]	Document Number Number-Kind Code[2] (if known)	Publication Date MM-DD-YYYY	Name of Patentee or Applicant of Cited Document	Pages, Columns, Lines, Where Relevant Passages or Relevant Figures Appear

FOREIGN PATENT DOCUMENTS

Examiner Initials*	Cite No.[1]	Foreign Patent Document Country Code[3] Number[4] Kind Code[5] (if known)	Publication Date MM-DD-YYYY	Name of Patentee or Applicant of Cited Document	Pages, Columns, Lines, Where Relevant Passages Or Relevant Figures Appear	T[6]
	H**	WO-2007/104103-A1	09-20-2007	2ic Australia Pty Ltd,		
	I**	WO-2007/137356	12-06-2007	2IC AUSTRALIA PTY LTD		
	J**	WO-2008/113127-A1	09-25-2008	2ic Australia Pty Ltd,		
	K**	WO-2010/094060	08-26-2010	IMDEX TECHNOLOGY AUSTRALIA PTY		
	L**	WO-2013/040641	03-28-2013	IMDEX GLOBAL BV		
	M**	WO-2013/126955	09-06-2013	GLOBALTECH CORP PTY LTD		

Examiner Signature		Date Considered	

*EXAMINER: Initial if reference considered, whether or not citation is in conformance with MPEP 609. Draw line through citation if not in conformance and not considered. Include copy of this form with next communication to applicant. [1] Applicant's unique citation designation number (optional). [2] See Kinds Codes of USPTO Patent Documents at www.uspto.gov or MPEP 901.04. [3] Enter Office that issued the document, by the two-letter code (WIPO Standard ST.3). [4] For Japanese patent documents, the indication of the year of the reign of the Emperor must precede the serial number of the patent document. [5] Kind of document by the appropriate symbols as indicated on the document under WIPO Standard ST.16 if possible. [6] Applicant is to place a check mark here if English language Translation is attached.

ALL REFERENCES CONSIDERED EXCEPT WHERE LINED THROUGH. /M.R.W/

PTO/SB/08a (07-09)
Approved for use through 11/30/2020. OMB 0651-0031
U.S. Patent and Trademark Office; U.S. DEPARTMENT OF COMMERCE
Under the Paperwork Reduction Act of 1995, no persons are required to respond to a collection of information unless it contains a valid OMB control number.

Substitute for form 1449/PTO

INFORMATION DISCLOSURE STATEMENT BY APPLICANT

(Use as many sheets as necessary)

Sheet	3	of	5

Complete if Known	
Application Number	17/082,877
Filing Date	October 28, 2020
First Named Inventor	Christopher L. Drenth
Art Unit	3676
Examiner Name	Not Yet Assigned
Attorney Docket Number	36362.0150U5

U. S. PATENT DOCUMENTS

Examiner Initials*	Cite No.[1]	Document Number Number-Kind Code[2] (if known)	Publication Date MM-DD-YYYY	Name of Patentee or Applicant of Cited Document	Pages, Columns, Lines, Where Relevant Passages or Relevant Figures Appear

FOREIGN PATENT DOCUMENTS

Examiner Initials*	Cite No.[1]	Foreign Patent Document Country Code[3] Number[4] Kind Code[5] (if known)	Publication Date MM-DD-YYYY	Name of Patentee or Applicant of Cited Document	Pages, Columns, Lines, Where Relevant Passages Or Relevant Figures Appear	T[6]
	N**	WO-2014/053012-A1	04-10-2014	Minnovare Pty Ltd		
	O**	WO-2014/089618	06-19-2014	2IC AUSTRALIA PTY LTD		
	P**	WO-2015/164394-A1	10-29-2015	Longyear Tm, Inc		

Examiner Signature		Date Considered	

*EXAMINER: Initial if reference considered, whether or not citation is in conformance with MPEP 609. Draw line through citation if not in conformance and not considered. Include copy of this form with next communication to applicant. [1] Applicant's unique citation designation number (optional). [2] See Kinds Codes of USPTO Patent Documents at www.uspto.gov or MPEP 901.04. [3] Enter Office that issued the document, by the two-letter code (WIPO Standard ST.3). [4] For Japanese patent documents, the indication of the year of the reign of the Emperor must precede the serial number of the patent document. [5] Kind of document by the appropriate symbols as indicated on the document under WIPO Standard ST.16 if possible. [6] Applicant is to place a check mark here if English language Translation is attached.

ALL REFERENCES CONSIDERED EXCEPT WHERE LINED THROUGH. /M.R.W/

PTO/SB/08b (07-09)
Approved for use through 11/30/2020. OMB 0651-0031
U.S. Patent and Trademark Office; U.S. DEPARTMENT OF COMMERCE
Under the Paperwork Reduction Act of 1995, no persons are required to respond to a collection of information unless it contains a valid OMB control number.

Substitute for form 1449/PTO

INFORMATION DISCLOSURE STATEMENT BY APPLICANT

(Use as many sheets as necessary)

Sheet	4	of	5

Complete if Known	
Application Number	17/082,877
Filing Date	October 28, 2020
First Named Inventor	Christopher L. Drenth
Art Unit	3676
Examiner Name	Not Yet Assigned
Attorney Docket Number	36362.0150U5

NON PATENT LITERATURE DOCUMENTS

Examiner Initials*	Cite No.[1]	Include name of the author (in CAPITAL LETTERS), title of the article (when appropriate), title of the item (book, magazine, journal, serial, symposium, catalog, etc.), date, page(s), volume-issue number(s), publisher, city and/or country where published.	T[2]
	A**	International Search Report and Written Opinion were mailed on 7/24/2015 by the International Searching Authority for International Application No. PCT/US2015/026907, filed on 4/21/2015 and published as WO 2015/164394 on 10/29/2015 (Applicant- Longyear TM, Inc.) (Attorney Docket36362.0150P1) (11 Pages)	
	B**	International Preliminary Report on Patentability was mailed on 10/25/2016 by the International Searching Authority for International Application No. PCT/US2015/026907, filed on 4/21/2015 and published as WO 2015/164394 on 10/29/2015 (Applicant- Longyear TM, Inc.) (Attorney Docket36362.0150P1) (9 Pages)	
	C**	Third Party Observations dated August 17, 2016 for International Patent Application No. PCT/US2015/026907 (Applicant- Longyear TM, Inc.) (42 pages)	
	D**	Examination Report was issued on 8/14/2018 by the Australian Patent Office for AU Application No. 2015249889, which was filed on 4/21/2015 (Applicant- Longyear TM, Inc.) (Attorney Docket No.- 36362.0150AU1) (3 pages)	
	E	Notice of Acceptance was issued on 7/23/2019 by the Australian Patent Office for AU Application No. 2015249889, which was filed on 4/21/2015 (Applicant- Longyear TM, Inc.) (Attorney Docket No.- 36362.0150AU1) (3 pages)	
	F**	Office Action was issued on 7/11/2018 by the Chilean Patent Office for CL Application No. 2016-002684, which was filed on 4/21/2015 (Applicant- Longyear TM, Inc.) (Attorney Docket No.- 36362.0150CL1) (3 pages)	
	G**	First Office Action was issued on 9/10/2018 by the SIPO for CN Application No.2015800211077, filed on 4/21/2015 and published CN 107109899 as 8/29/2017 on (Applicant- Longyear TM, Inc.) (Attorney Docket 36362.0150CN1) (5 Pages)	
	H**	Second Office Action was issued on 1/19/2020 by the SIPO for CN Application No.2015800211077, filed on 4/21/2015 and published CN 107109899 as 8/29/2017 on (Applicant- Longyear TM, Inc.) (Attorney Docket 36362.0150CN1) (6 Pages)	
	I**	Extended European Search Report issued on 10/17/2017 by the European Patent Office for Application No. 15782230.5, which was filed on April 21, 2015 and published as EP 3134600 on March 1, 2017 (Inventor- Drenth et al.; Applicant- Longyear TM, Inc.) (Attorney Docket No.- 36362.0150EP1) (9 pages)	
	J**	Preliminary Amendment was mailed on 2/28/2017 to the USPTO for U.S. Application No. 14/692,484, which was filed on April 21, 2015 and granted as 10,047,581 on 8/14/2018 (Inventor- Drenth et al.; Applicant- Longyear TM, Inc.) (Attorney Docket No.- 36362.0150U2) (7 pages)	

Examiner Signature		Date Considered	

*EXAMINER: Initial if reference considered, whether or not citation is in conformance with MPEP 609. Draw line through citation if not in conformance and not considered. Include copy of this form with next communication to applicant.

[1] Applicant's unique citation designation number (optional). [2] Applicant is to place a check mark here if English language Translation is attached.

PTO/SB/08b (07-09)
Approved for use through 11/30/2020. OMB 0651-0031
U.S. Patent and Trademark Office; U.S. DEPARTMENT OF COMMERCE
Under the Paperwork Reduction Act of 1995, no persons are required to respond to a collection of information unless it contains a valid OMB control number.

Substitute for form 1449/PTO

INFORMATION DISCLOSURE STATEMENT BY APPLICANT

(Use as many sheets as necessary)

Sheet	5	of	5

Complete if Known	
Application Number	17/082,877
Filing Date	October 28, 2020
First Named Inventor	Christopher L. Drenth
Art Unit	3676
Examiner Name	Not Yet Assigned
Attorney Docket Number	36362.0150U5

NON PATENT LITERATURE DOCUMENTS

Examiner Initials*	Cite No.[1]	Include name of the author (in CAPITAL LETTERS), title of the article (when appropriate), title of the item (book, magazine, journal, serial, symposium, catalog, etc.), date, page(s), volume-issue number(s), publisher, city and/or country where published.	T[2]
	K**	Non Final Rejection was issued on 8/18/2017 by the USPTO for U.S. Application No. 14/692,484, which was filed on April 21, 2015 and granted as 10,047,581 on 8/14/2018 (Inventor- Drenth et al.; Applicant- Longyear TM, Inc.) (Attorney Docket No.- 36362.0150U2) (7 pages)	
	L**	Response to Non Final Rejection was mailed on 10/18/2017 to the USPTO for U.S. Application No. 14/692,484, which was filed on April 21, 2015 and granted as 10,047,581 on 8/14/2018 (Inventor-Drenth et al.; Applicant- Longyear TM, Inc.) (Attorney Docket No.- 36362.0150U2) (9 pages)	
	M**	Notice of Allowance was issued on 11/8/2017 by the USPTO for U.S. Application No. 14/692,484, which was filed on April 21, 2015 and granted as 10,047,581 on 8/14/2018 (Inventor- Drenth et al.; Applicant- Longyear TM, Inc.) (Attorney Docket No.- 36362.0150U2) (5 pages)	
	N**	Notice of Allowance was issued on 4/12/2018 by the USPTO for U.S. Application No. 14/692,484, which was filed on April 21, 2015 and granted as 10,047,581 on 8/14/2018 (Inventor- Drenth et al.; Applicant- Longyear TM, Inc.) (Attorney Docket No.- 36362.0150U2) (7 pages)	
	O**	Issue Notification was issued on 7/25/2018 by the USPTO for U.S. Application No. 14/692,484, which was filed on April 21, 2015 and granted as 10,047,581 on 8/14/2018 (Inventor- Drenth et al.; Applicant- Longyear TM, Inc.) (Attorney Docket No.- 36362.0150U2) (1 page)	
	P**	Non Final Rejection was issued on 3/14/2019 by the USPTO for U.S. Application No. 16/017,334, filed on 6/25/2018 and granted as 10,465,463 on 11/5/2019 (Inventor-CHRISTOPHER L. DRENTH) (Attorney Docket 36362.0150U3) (11 Pages)	
	Q**	Response Non Final Rejection was mailed on 6/12/2019 to the USPTO for U.S. Application No. 16/017,334, filed on 6/25/2018 and granted as 10,465,463 on 11/5/2019 (Inventor-CHRISTOPHER L. DRENTH) (Attorney Docket 36362.0150U3) (9 Pages)	
	R**	Notice of Allowance was issued on 3/14/2019 by the USPTO for U.S. Application No. 16/017,334, filed on 6/25/2018 and granted as 10,465,463 on 11/5/2019 (Inventor-CHRISTOPHER L. DRENTH) (Attorney Docket 36362.0150U3) (5 Pages)	
	S**	Issue Notification was issued on 3/14/2019 by the USPTO for U.S. Application No. 16/017,334, filed on 6/25/2018 and granted as 10,465,463 on 11/5/2019 (Inventor-CHRISTOPHER L. DRENTH) (Attorney Docket 36362.0150U3) (1 Page)	
	T**	"Devicore BBT Directional Core Drilling Borehole Planning Service" Retrieved from the Internet:URL:http://www.devico.com/products/devicore-bbt [stored on the Wayback Machine on February 14, 2014]	

Examiner Signature	/MICHAEL R WILLS III/	Date Considered	10/22/2021

*EXAMINER: Initial if reference considered, whether or not citation is in conformance with MPEP 609. Draw line through citation if not in conformance and not considered. Include copy of this form with next communication to applicant.

[1] Applicant's unique citation designation number (optional). [2] Applicant is to place a check mark here if English language Translation is attached.

ALL REFERENCES CONSIDERED EXCEPT WHERE LINED THROUGH. /M.R.W/

PTO/SB/08a (07-09)
Approved for use through 11/30/2020. OMB 0651-0031
U.S. Patent and Trademark Office; U.S. DEPARTMENT OF COMMERCE
Under the Paperwork Reduction Act of 1995, no persons are required to respond to a collection of information unless it contains a valid OMB control number.

Substitute for form 1449/PTO

INFORMATION DISCLOSURE STATEMENT BY APPLICANT

(Use as many sheets as necessary)

Sheet	1	of	2

Complete if Known	
Application Number	17/082,877
Filing Date	October 28, 2020
First Named Inventor	Christopher L. Drenth
Art Unit	3676
Examiner Name	Not Yet Assigned
Attorney Docket Number	36362.0150U5

U. S. PATENT DOCUMENTS

Examiner Initials*	Cite No.[1]	Document Number Number-Kind Code[2] (if known)	Publication Date MM-DD-YYYY	Name of Patentee or Applicant of Cited Document	Pages, Columns, Lines, Where Relevant Passages or Relevant Figures Appear
	A	US4955438A	09-11-1990	Juergens	

FOREIGN PATENT DOCUMENTS

Examiner Initials*	Cite No.[1]	Foreign Patent Document Country Code[3] Number[4] Kind Code[5] (if known)	Publication Date MM-DD-YYYY	Name of Patentee or Applicant of Cited Document	Pages, Columns, Lines, Where Relevant Passages Or Relevant Figures Appear	T[6]
	A	WO2008113127A1	03-09-2008	Beach et al.		
	B	WO2013126955A1	02-27-2013	Hejleh et al.		

Examiner Signature		Date Considered	

*EXAMINER: Initial if reference considered, whether or not citation is in conformance with MPEP 609. Draw line through citation if not in conformance and not considered. Include copy of this form with next communication to applicant. [1] Applicant's unique citation designation number (optional). [2] See Kinds Codes of USPTO Patent Documents at www.uspto.gov or MPEP 901.04. [3] Enter Office that issued the document, by the two-letter code (WIPO Standard ST.3). [4] For Japanese patent documents, the indication of the year of the reign of the Emperor must precede the serial number of the patent document. [5] Kind of document by the appropriate symbols as indicated on the document under WIPO Standard ST.16 if possible. [6] Applicant is to place a check mark here if English language Translation is attached.

I hereby certify that this paper (along with any paper referred to as being attached or enclosed) is being transmitted via the Office electronic filing system in accordance with 37 C.F.R. § 1.6(a)(4).

Dated: July 23, 2021 Electronic Signature: /Benjamin D. Kirk/ (Benjamin D. Kirk)

PTO/SB/08b (07-09)
Approved for use through 11/30/2020. OMB 0651-0031
U.S. Patent and Trademark Office; U.S. DEPARTMENT OF COMMERCE
Under the Paperwork Reduction Act of 1995, no persons are required to respond to a collection of information unless it contains a valid OMB control number.

Substitute for form 1449/PTO

INFORMATION DISCLOSURE STATEMENT BY APPLICANT

(Use as many sheets as necessary)

Sheet	2	of	2

Complete if Known	
Application Number	17/082,877
Filing Date	October 28, 2020
First Named Inventor	Christopher L. Drenth
Art Unit	3676
Examiner Name	Not Yet Assigned
Attorney Docket Number	36362.0150U5

NON PATENT LITERATURE DOCUMENTS

Examiner Initials*	Cite No.[1]	Include name of the author (in CAPITAL LETTERS), title of the article (when appropriate), title of the item (book, magazine, journal, serial, symposium, catalog, etc.), date, page(s), volume-issue number(s), publisher, city and/or country where published.	T[2]

Examiner Signature		Date Considered	

*EXAMINER: Initial if reference considered, whether or not citation is in conformance with MPEP 609. Draw line through citation if not in conformance and not considered. Include copy of this form with next communication to applicant.

[1] Applicant's unique citation designation number (optional). [2] Applicant is to place a check mark here if English language Translation is attached.

(12) INTERNATIONAL APPLICATION PUBLISHED UNDER THE PATENT COOPERATION TREATY (PCT)

(19) World Intellectual Property Organization
International Bureau

(43) International Publication Date
6 September 2013 (06.09.2013)

WIPO | PCT

(10) International Publication Number
WO 2013/126955 A1

(51) International Patent Classification:
E21B 25/16 (2006.01) *E21B 47/02* (2006.01)

(21) International Application Number:
PCT/AU2013/000179

(22) International Filing Date:
27 February 2013 (27.02.2013)

(25) Filing Language: English

(26) Publication Language: English

(30) Priority Data:

2012900778	28 February 2012 (28.02.2012)	AU
2012903078	20 July 2012 (20.07.2012)	AU
2012903288	1 August 2012 (01.08.2012)	AU

(71) Applicant: GLOBALTECH CORPORATION PTY LTD [AU/AU]; 1/48 Vinnicombe Drive, Canning Vale, Western Australia 6155 (AU).

(72) Inventors: HEJLEH, Khaled; 34A Leake Street, Peppermint Grove, Western Australia 6011 (AU). STEWART, Gordon; 18 Airle Street, Claremont, Western Australia 6010 (AU). WILKINSON, Brett James; 17 Quom Street, Wembley Downs, Western Australia 6019 (AU). KLASS, Michael Alan; 37 Raine Terrace, Winthrop, Western Australia 6150 (AU). ANWAR, Johan; 20 Prospect Crescent, Kalamunda, Western Australia 6076 (AU).

(74) Agent: WATERMARK PATENT & TRADE MARKS ATTORNEYS; GPO Box 5093, Melbourne, Victoria 3001 (AU).

(81) Designated States *(unless otherwise indicated, for every kind of national protection available)*: AE, AG, AL, AM, AO, AT, AU, AZ, BA, BB, BG, BH, BN, BR, BW, BY, BZ, CA, CH, CL, CN, CO, CR, CU, CZ, DE, DK, DM, DO, DZ, EC, EE, EG, ES, FI, GB, GD, GE, GH, GM, GT, HN, HR, HU, ID, IL, IN, IS, JP, KE, KG, KM, KN, KP, KR, KZ, LA, LC, LK, LR, LS, LT, LU, LY, MA, MD, ME, MG, MK, MN, MW, MX, MY, MZ, NA, NG, NI, NO, NZ, OM, PA, PE, PG, PH, PL, PT, QA, RO, RS, RU, RW, SC, SD, SE, SG, SK, SL, SM, ST, SV, SY, TH, TJ, TM, TN, TR, TT, TZ, UA, UG, US, UZ, VC, VN, ZA, ZM, ZW.

(84) Designated States *(unless otherwise indicated, for every kind of regional protection available)*: ARIPO (BW, GH, GM, KE, LR, LS, MW, MZ, NA, RW, SD, SL, SZ, TZ, UG, ZM, ZW), Eurasian (AM, AZ, BY, KG, KZ, RU, TJ, TM), European (AL, AT, BE, BG, CH, CY, CZ, DE, DK, EE, ES, FI, FR, GB, GR, HR, HU, IE, IS, IT, LT, LU, LV, MC, MK, MT, NL, NO, PL, PT, RO, RS, SE, SI, SK, SM, TR), OAPI (BF, BJ, CF, CG, CI, CM, GA, GN, GQ, GW, ML, MR, NE, SN, TD, TG).

Published:

— *with international search report (Art. 21(3))*

(54) Title: IMPROVEMENTS TO DOWNHOLE SURVEYING AND CORE SAMPLE ORIENTATION SYSTEMS, DEVICES AND METHODS

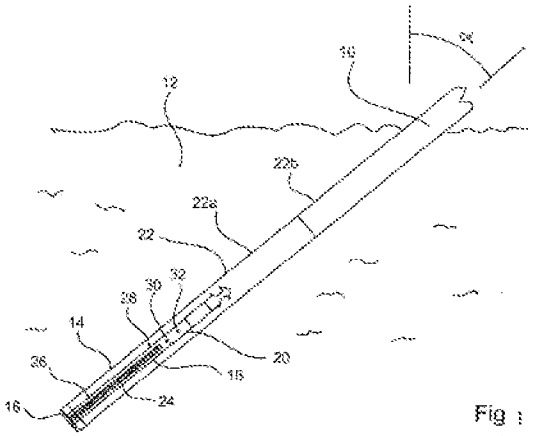

Fig 1

(57) Abstract: A method and system of validating orientation of a core obtained by drilling the core from a subsurface body of material, the method including: a) determining that vibration from drilling is below a nominated level, b) recording data relating to orientation of the core to be retrieved, the data recorded using a downhole core orientation data recording device, c) separating the core from the subsurface body, and d) obtaining from the core orientation data recording device an indication of the orientation of the core based on the recorded data obtained when the vibration from drilling was below the nominated level and before the core was separated from the subsurface body. A method of determining orientation of a core sample obtained by drilling from aboveground into a subsurface body includes recording data relating to a core sample being obtained by the drilling when vibration from drilling is below a threshold; providing an input to a user operated communication device; the communication device identifying a time of the user input to the communication device; retrieving the data gathering device and core sample; communicating between the communication device and the retrieved data gathering device; determining from indications provided by the retrieved data gathering device an orientation of the core sample.

WO 2013/126955 A1

IMPROVEMENTS TO DOWNHOLE SURVEYING AND CORE SAMPLE ORIENTATION SYSTEMS, DEVICES AND METHODS

FIELD OF THE INVENTION

[0001] The present invention relates to improvements to systems, devices and methods for conducting downhole surveying and determining the orientation of a core sample relative to a body of material from which the core sample has been obtained.

[0002] The present invention further relates to a device, system and method for use in marking orientation of a core sample.

BACKGROUND TO THE INVENTION

[0003] As part of mining/ oil & gas exploration activities, as well as extracting rock samples for construction/ civil engineering, there is a need to obtain underground 'core' samples for analysis by geologists.

[0004] Core orientation is the process of obtaining and marking the orientation of a core sample from a drilling operation. The orientation of the sample is determined with regard to its original position in a body of material, such as rock or ore deposits underground.

[0005] Such core samples are obtained by drilling into an underground medium, such as sedimentary rock, and extracting a solid cylindrical core which reveals, amongst other things, the type of rock, rock strata, presence or absence of minerals or other deposits, and any veins of useful deposits. Core samples can be correlated against each other to reveal trends in rock strata and deposits, which help predict whether mining is worthwhile, and if so, where, in what direction and how deep below the surface.

[0006] In order to obtain required information from the extracted core samples, a core orientation device is attached between a greaser unit and an inner core tube holding the core sample. The purpose of the core orientation device is to measure and log the orientation of the core with respect to the 'down-side' of the underground location from which it has been extracted. This is an important process as these core samples are used to build a three dimensional profile of existing subsurface resource deposits, such as iron ore or diamonds. If a valuable ore seam is found, it is vital that the core is orientated properly so that a true picture of the ore body can be developed underground.

[0007] Whilst depth and azimuth are used as important indicators of core position, they are generally inadequate on their own to determine the original position and attitude of subsurface geological features. Core orientation enables such details to be determined.

[0008] Orientation of the core sample needs to be obtained from a drilling operation. The orientation of the sample is determined with regard to its original position in a body of material, such as rock or ore deposits underground. Core orientation i.e. which side of the core was facing the bottom (or top) of a borehole and rotational orientation compared to surrounding material, enables such details to be determined.

[0009] Core samples are cylindrical in shape, typically around 3 metres long, and are obtained by drilling with an annular hollow core drill into subsurface material, such as sediment and rock, and recovering the core sample. A diamond tipped drill bit is used at the end of the hollow drill string. As the drill progresses deeper, more sections of hollow steel drill tube are added to extend the drill string. An inner tube assembly captures the core sample. This inner tube assembly remains stationary while the outer tubes rotate with the drill bit. Thus, the core sample is pushed into the inner tube.

[0010] Once retrieved to the surface, the core end is subsequently marked to indicate orientation of the core sample.

[001 1] Current practice involves the core orientation being recorded during drilling, and analysis is undertaken during core logging. The core logging process requires the use of systems to measure the angles of the geological features, such as an integrated core logging system.

[0012] Through core orientation, it is possible to understand the geology of a subsurface region and from that make strategic decisions on future mining or drilling operations, such as economic feasibility, predicted ore body volume, and layout planning. In the construction industry, core orientation can reveal geological features that may affect siting or structural foundations for buildings.

[0013] Typical systems and methodologies presently used periodically record orientation of the core between commencement and end of drilling. Vibration from drilling causes many recorded orientation results to be inaccurrate or not needed because orientation before end of drilling is not required or used. This needless recordal of data wastes the limited power of the onboard battery powering the orientation sensors, and thereby limits the amount of time an orientation unit can remain downhole before needing a recharge or battery replacement.

[0014] Apart from analyzing this content of the core sample, it is also necessary to determine the Orientation' of the core(s) with respect to the drilling angle and depth from the earth's surface and the direction of rotation of the core, at the source of extraction. These measurements are used as an aid in determining the consistency and direction of deposits, such as ore content, and for producing a 3D 'picture' of underground mineralization.

[0015] After retrieving the core sample to the surface, the core orientation device will then be used to electronically or mechanically determine the core's

REFLEX EXHIBIT 1013 - 219/432

orientation before being drilled out. The operator would have to rotate the whole inner tube so as to position the core tube such that the core is set in an up/down position in the core tube. This gives a correct reference for the original orientation of the material in the core when it was attached to the ground material prior to extraction. The core sample end is then visually marked to show the correct up/down orientation for later analysis.

[001 6] It has been realised that the methodology of obtaining the desired orientation of the core representative of the point at which the core was 'broken' away from the body from which it is drilled could be improved.

[001 7] To this end, it has been found desirable of the present invention to provide a method and system of obtaining an indication of core orientation that reduces power demand on the orientation unit and avoids the need to record orientation data that is not needed. This aims to simplify and speed up the core orientation data gathering process.

[0018] Core orientation is recorded during drilling, and analysis is undertaken during core logging. The core logging process requires the use of systems to measure the angles of the geological features, such as an integrated core logging system.

[001 9] Through core orientation, it is possible to understand the geology of a subsurface region and from that make strategic decisions on future mining or drilling operations, such as economic feasibility, predicted ore body volume, and layout planning. In the construction industry, core orientation can reveal geological features that may affect siting or structural foundations for buildings

[0020] In a drill string, a 'back end' assembly connects to a greaser. This greaser lubricates the back end assembly which rotates with the outer casing while the greaser remains stationary with the inner tubing.

[0021] Once a core sample is cut, the inner tube assembly is recovered by winching to the surface. After removal of the back end assembly from the inner tube assembly, the core sample is recovered and catalogued for analysis.

[0022] Various core orientation systems have previously been used or proposed. Traditional systems use a spear and clay impression arrangement where a spear is thrown down the drill string and makes an impression in clay material at an upper end of the core sample. This impression can be used to vindicate the orientation of the core at the time and position the spear impacted the clay.

[0023] A more recent system of determining core oprientation is proposed in Australian patent number 20061001 13 (also as US patent number 7,584,055). This patent document describes a core orientation device for a core drill. The device provides signals associated with a physical orientation of a core orientation device for a particular moment in time. The device includes a memory for storing and providing the orientation data when required. The system described in AU 20061001 13 provides a two unit replacement for the greaser described above. A first orientation system unit houses electronics and a battery used to record orientation data, and the second greaser unit is an extended greaser accommodating a physical screw on connector for the first unit as well as serving as the greaser. This combination forms part of the inner tube assembly with the core tube, orientation system 'first' unit and the connector/greaser 'second' unit. However, as a result of the now extended length of the combined orientation system and greaser units compared with a standard greaser only unit, the outer drill string casing now requires a matching extension piece to extend the outer casing an equal amount. The core orientation system has a display on one face which is used when setting up the unit prior to deployment, and to indicate core sample alignment when the core sample is recovered. At the surface before removing the core sample from the inner tube assembly, the operator views the display fitted on the system. The display indicates for the operator to rotate the unit and the sample within the tube until the whole core tube and sample is

oriented with the lower section of the core sample at the lower end of the tube. The core sample is marked (usually by pencil) before being removed from the core for future analysis.

[0024] However, the device described in AU 2006100113 has been found to have certain limitations. The orientation unit is connected to the greaser by a screw thread and o-ring seal arrangement. In the harsh down hole environment within the drill string, it has been realised that the o-ring seals are not always effective and can let fluid into the space between the orientation unit and the greaser. The display unit allows fluid into the electronics of the orientation, resulting in a risk of fault or failure of the device. Furthermore, the orientation unit must be disassembled from the greaser unit before the display and orientation unit can be viewed, rotated and the required core orientation displayed. Thus, the device of AU 2006100113 requires manual manipulation before any reading can be viewed on the display, if the display and the electronics have survived any ingress of fluid past the o-ring seal.

[0025] Furthermore, a problem has been identified in the known art. Battery powered downhole survey equipment, such as probes and core orientation units, are typically switched on at the surface and run almost continuously or operate on a frequent timer basis. For example, a known core orientation device the subject of Australian patent application AU 2010200162 takes measurements determined by a timer whether or not the values obtained are worthwhile or accurate. This leads a large amount of unusable data which is typically discarded and such continuous or too often recording of data unnecessarily rapidly reduces battery life of the downhole device. Such known arrangements may only last a few weeks or months before the downhole device needs recharging or replacing. Often spare equipment is held on hand just in case the batter fails. This leads to far too much equipment being needed, at an increased cost to the drilling operator. It would be beneficial to reduce reliance on holding spare equipment on hand.

[0026] In addition, it has been realised that, during the drilling process, if sections of fragmented earth are drilled into (resulting in fractured core samples) then the inner tube can rotate. Furthermore, vibrations caused by drilling have also been identified as a cause of inaccurate data.

[0027] Also, it has been realised that only a limited amount of downhole data is actually required in order to later determine correct orientation of a core sample at the surface. It has been realised that data recording on a continuous or frequent periodic basis whilst drilling is occurring is unnecessary. Only down orientation of the core sample needs to be known, and provided data relating to the down orientation can be identified and referenced to a particular known time, core orientation can be determined.

[0028] It has therefore been found desirable to provide improved downhole data recording through a system, device and method that alleviates one or more of the aforementioned problems whilst facilitating more reliable data recovery.

[0029] After retrieving the core sample to the surface, the core orientation device will then be used to electronically or mechanically determine the core's orientation before being drilled out. The operator would have to rotate the whole inner tube so as to position the core tube such that the core is set in an up/down position in the core tube. This gives a correct reference for the original orientation of the material in the core when it was attached to the ground material prior to extraction.

[0030] Personnel then physically 'mark' the lower end position of that core sample end face protruding from the core tube with a wax pencil or similar marker (usually a red wax pencil). In order to accurately mark the 'lower end' of the core face, a device is used to determine the position to mark the core. This is usually achieved with the aid of spirit-level v-block devices to determine the position to place the 'lower-end' mark on the core face.

[0031] This procedure, although straightforward, is often carried out incorrectly, leading to incorrect marking of the orientation of the core. This error is often due to insufficient training, lack of understanding due to language barriers, operator fatigue, ineffectually carrying out of the procedure or basic v-groove spirit level devices not being used correctly or their correct use not being easily understood.

[0032] Incorrect marking of the core orientation through human error leads to poor geophysical analysis and results. It has been found that geologists, on realising the marking error, have needed to search through core samples and determine the correct orientation. This loses many man hours of work in having to go back through the original core samples and identify the correct orientation, and until this is done, further development of the worksite cannot be accurately carried out. Mining may commence or continue in the wrong place and/or may miss the vein of resource.

[0033] With the aforementioned in mind, it is desirable of the present invention to provide improved means and way by which core sample orientation can be accurately marked.

SUMMARY OF THE INVENTION

[0034] With the aforementioned in mind, in one aspect the present invention provides a method of validating orientation of a core obtained by drilling the core from a subsurface body of material, the method including: a) determining that vibration from drilling is below a nominated level, b) recording data relating to orientation of the core to be retrieved, the data recorded using a downhole core orientation data recording device, c) separating the core from the subsurface body, and d) obtaining from the core orientation data recording device an indication of the orientation of the core based on the recorded data obtained when the vibration from drilling was below the nominated level and before the core was separated from the subsurface body.

[0035] Preferably the core orientation data recording device activates from a standby mode after detecting that vibration from drilling is at or below the nominated level. The nominated level may coincide with no drilling occurring - to indicate that the core has been received in the inner core tube by drilling. The core orientation data recording device may then determine an indication of core orientation. The core may then be separated from the body of material.

[0036] An alternative form of the present invention provides a method of recording core orientation data from a drilling operation when obtaining a core from a subsurface body of material, the method including: determining that drilling has ceased for a period of time, using a downhole core orientation data recording device to record data relating to orientation of the core to be retrieved, separating the core from the subsurface body, retrieving the core to the surface, and obtaining from the core orientation data recording device an indication of the orientation of the core based on the recorded data obtained once the drilling had ceased and before the core was separated from the subsurface body.

[0037] When drilling has ceased is preferably the end of drilling immediately prior to obtaining the core. That is, recording the data relating to orientation of the core is obtained preferably after final drilling has been completed prior to obtaining the next core sample.

[0038] Preferably no further data relating to core orientation is obtained after separating the core from the subsurface body. This confirms that no further data is required in order to identify (and subsequently mark) the required correct orientation of the core for later analysis of the core.

[0039] Once drilling has ceased, a predetermined time interval may elapse before the core is separated from the subsurface body.

[0040] Alternatively, or in addition, a predetermined time may elapse after drilling has ceased until the core orientation data is obtained and then the core is

subsequently separated from the subsurface body of material. Consequently, the core may be separated from the subsurface body at any instance after the data is recorded provided the drilling does not recommence before the core is separated. If drilling recommences, the drilling must cease for a period of time and fresh orientation data is obtained before the core is separated.

[0041] For clarity, the core orientation device does not orientate the core, rather, it records signals indicative of the orientation of the core to be retrieved. Core orientation device and core orientation data recording device are the same in this description.

[0042] Preferably any core orientation data samples obtained during drilling or at intervals between periods of drilling are not used, or are disregarded, when determining orientation of the core.

[0043] When the drilling ends and the operator is ready to separate the core, preferably a predetermined period of time when there is no drilling is allowed to elapse before the core is separated. The predetermined period may be 10 seconds or more of no drill rotation. Preferably that period does not exceed 90 seconds.

[0044] In addition to core orientation, dip measurement may be obtained during the period of drilling 'silence' i.e. when drilling has ceased prior to separating the core.

[0045] The core may be separated from the subsurface body by breaking, such as by a strong sharp pull back of the inner tube of the drilling assembly. The operation of breaking the core should take less than 1 minute, preferably less than 30 seconds and more preferably between 10 seconds and 30 seconds.

[0046] After separating the core from the subsurface body, a period of time elapses without any further drilling or rotation, or retrieval of the drilling assembly occurring. This period is preferably greater than 90 seconds.

[0047] The core orientation device may be sensing for presence or absence of vibration from drilling (or both sensing and recording), and preferably determining whether core orientation data is obtained during a first period when there is no drilling, and preferably determining when the core sample is separated (by detecting related vibration(s)), and preferably determining that the second period of no drilling has occurred after the core separation. The purpose of these timings is to identify the correct 'signature' of 1) no drilling vibration, 2) separation (breaking) of the core, and 3) no drilling. Preferably, if one of these criteria is not met then the data sample or the core sample obtained will be disregarded.

[0048] Separation of the core from the subsurface body of material may be determined by detecting acceleration, change of acceleration, or detecting tension or strain, or change in tension or strain, or combinations thereof, resulting from a force applied to the core and the core separating from the subsurface body.

[0049] Alternatively, the period of time immediately preceding separation may be determined by a change in the total pressure surrounding the core orientation device or a change in differential pressure between the outside and inside of the core tube, or a predetermined pressure level being reached or exceeded either as a differential pressure or total pressure.

[0050] The force may be applied by pulling backwards (in the Z direction back up the borehole) the inner tube holding the core. This can be achieved by an overlook assembly being attached to the backend assembly associated with the inner tube and core.

[0051] The Z direction is taken to be the direction of the borehole or drill hole. X and Y directions define planes or directions orthogonal to the Z direction i.e. at right angles to the linear direction of the borehole.

[0052] Acceleration or change of acceleration (jerk) may be termed negative acceleration because the force applied tries to pull the core in the direction back up the borehole.

[0053] Acceleration or change in acceleration is detected by at least one accelerometer provided within the core orientation data recording device. A three axis accelerometer (X,Y,Z directions) may be used. As mentioned above, acceleration or change in acceleration detected may be in a Z direction in line with an advancing drilling activity i.e. the linear direction of the borehole.

[0054] Tension or strain or change in tension or strain may be detected by at least one strain gauge within or on a portion of the downhole equipment associated with obtaining the core. At least one strain gauge may be provided within or on the core orientation data recording device or within or on a section of drill tube. The at least one strain gauge may be electrically connected to the core orientation data recording device.

[0055] Change in total pressure within, or presence or change of a pressure differential between the interior and exterior of, the inner core tube can be detected by at least one pressure sensor. The at least one sensor may be provided within or on, or both, the core orientation data recording device and/or within a section of the inner tube assembly. Pressure above a threshold may be detected.

[0056] At least one of the at least one pressure sensor may be electrically or optically connected to the core orientation data-recording device.

[0057] The change or presence of the pressure may be used to determine a point at which the core should be separated from the subsurface body of material. For example, a pressure measurement or change in pressure may be used to determine that the inner core tube is full or nearly full of core and it is time to retrieve the core. In which case, drilling can cease, the core orientation data recording device can take measurements (such as of core orientation position, gravitational field direction and strength, magnetic field direction and strength etc.) and the core can then be separated from the subsurface body.

[0058] One or more forms of the present invention may be provided by a system including at least a core orientation data recording device and a core drilling assembly. Preferably the system includes a remote communication device configured to communicate with the core orientation data recording device to identify a required orientation of the core.

[0059] The core orientation data recording device may include at least one visual indicator to show one or more of a direction to rotate the core to obtain the required orientation or a visual indication to show the required orientation.

[0060] With the aforementioned in view, at least one form of the present invention provides a method of determining orientation of a core sample obtained by drilling from aboveground into a subsurface body, the method including:

a) operating a downhole data gathering device to detect when vibration from drilling is below a threshold;

b) recording data relating to a core sample being obtained by the drilling when vibration from drilling is below the threshold;

c) providing an input to a user operated communication device;

d) the communication device identifying time of the user input to the communication device;

e) retrieving the data gathering device and core sample;

f) communicating between the communication device and the retrieved data gathering device;

g) determining from indications provided by the retrieved data gathering device an orientation of the core sample.

[0061] Obtaining data when vibration from drilling is below a threshold, preferably when there is no drilling and therefore no vibration from drilling at all, enhances reliability and accuracy of the data. For example, magnetic, gravity and inclination values have been found to be more accurately when no drilling is occurring. Drilling activity can cause inaccuracies in the data. This results in multiple data sets saved in known devices simply being unusable. Processing unusable data within the survey probe or externally (such as by experts assessing the data) is uneconomical and a waste of time, money and resources. Also, and of great benefit, the data gathering device can 'go to sleep' in a standby mode while drilling is occurring and no data is being collected. This greatly enhances battery life in the data gathering device. By only waking to take sampling shots when no vibration is detected, the present invention greatly increase battery life.

[0062] The communication device may use an internal clock or timer to 'mark' or identify a user input. For example, the user input may commence a timing period of an internal clock or timer.

[0063] The input to the communication device, such as a user operating one or more buttons or touch screen controls, on the communication device may include one or more of; an indication of a most recent occurrence when drilling

ceased; an indication immediately prior to separating the core sample from the subsurface body and/or an indication after separating the core sample from the subsurface body.

[0064] The communication device may be used to activate/deactivate the data gathering device, such as to cease gathering data.

[0065] The data gathering device may be used to provide survey data to the communication device or another receiver, the survey data being or derived from recorded data obtained when the no vibration had been detected.

[0066] The data gathering device may be operated to provide to the communication device survey data relating to recorded data obtained prior to a defined period of time.

[0067] The defined period of time may be provided to the retrieved data gathering device from the communication device.

[0068] The defined period of time may be used by the data gathering device to identify recorded data obtained during surveying at a time prior to the amount of the defined time.

[0069] Identified recorded data provided as survey data to the communication device or other receiver may be from recorded data recorded by the data gathering device at a period in time closest to the time prior to the amount of defined time than any other recorded data event.

[0070] The data gathering device may be operated to detect that vibration is occurring and to therefore wait until a subsequent no vibration event occurs before recording data.

[0071] The data gathering device may be employed to detect multiple consecutive survey values during a period of no vibration.

[0072] Acceptable recorded data may be identified with a timestamp relating to real time.

[0073] A further aspect of the present invention provides a system for use in determining orientation of a core sample obtained by drilling from aboveground into a subsurface body, the system including a data gathering device arranged and configured with control means to detect when vibration from drilling is below a threshold, and activation means to cause the data gathering device to record data during the period of vibration below the threshold.

[0074] Downhole survey equipment that 'goes to sleep' when it would otherwise record data that is unnecessary to collect or not worthwhile collecting because of inaccuracies greatly saves on battery power and therefore lengthens the life of the downhole device before the battery needs replacing or recharging. This means that high value (cost and functional value) equipment can remain in use in the field when known equipment would otherwise need replacing. This can avoid the need to hold multiple pieces of battery powered survey equipment on hand just in case one loses power.

[0075] Preferably the threshold it set at no vibration from drilling.

[0076] Vibration from drilling results from the drill bit cutting into the sub-surface body to advance the drill string and from rotation of the drillstring tube.

[0077] The data gathering device including a timer providing a timestamp for recorded data events.

[0078] Preferably, when drilling stops and vibration is detected to be below the threshold, the data gathering device activates (wakes from standby) and

records core orientation data (takes a core orientation 'shot'). The core is then broken from its connection with the ground (no further drilling being required). The core sample can be separated from the ground to which it is connected by yanking or jerking axially along the axis of the drill string.

[0079] One or more forms or embodiments of the present invention provides or includes a method whereby, when drilling is stopped;

a) the data gathering device records core orientation data;

b) the core is subsequently separated from its connection with the ground;

c) the communication device signals to the data gathering device to identify the recorded core orientation data that was immediately prior to separating the core sample from the ground; and

d) using that recorded core orientation data to identify orientation of the core sample.

[0080] A communication device as part of the system includes communication means arranged and configured to communicate a time value to the data gathering device, the data gathering device including processing means which determines from the received time value the closest recorded data obtained immediately prior to a time determined by subtracting the received time value from a current time value.

[0081] The current time value (preferably a real time value or a time quantity) may be provided by the communication device to the data gathering device.

[0082] An alternative aspect of the present invention provides a method of obtaining downhole survey data in a borehole created by drilling, the method

including advancing a data gathering device into the borehole, the data gathering device determining that vibration is below a predetermined threshold, bringing the data gathering device out of a standby mode during a period when vibration is determined to be below the threshold, recording data during the period, returning the data gathering device to a standby mode when vibration is determined to be above the threshold or sufficient said data has recorded.

[0083] Thus, a preferred concept of reducing power consumption in downhole survey tools is realised. A standby, or low power mode, reduces power consumption to a minimum while vibration is detected to be above a threshold limit.

[0084] An alternative aspect of the present invention provides a method of determining selection of downhole survey or core orientation data of a respective downhole survey or core orientation device, the method including;

a) providing a data recorder, the recorder arranged to record data relating to downhole surveying or core sample orientation;

b) providing a communication device remote from the data recorder, the communication device having a timer and remaining at a ground surface when the data recorder is below ground;

c) commencing timing with the timer;

d) operating the data recorder to record one or more data events whilst downhole;

e) subsequent to communication device commencing the timing, signalling to the data recorder to provide or identify a recorded data event, the recorded data event being determined by the communication device to be a predetermined period of time prior to the signalling to the data recorder.

[0085] Thus, the communication device, which may also be termed a communication device, and the data recorder, which may also be termed a data gathering device, are not time synchronised to each other, and yet the data recorder can be interrogated to provide a required data set or record from a set period time prior to being signalled. For example, the communication device, with its own timer running, may be used to 'mark' a specific moment. At this stage, the data recorder has its own timer running, unsynchronised to the timer of the data recorder. A period of time after the 'mark' recorded, the communication device signals to the data recorder to identify or note a data set or record previously recorded a set period of time ago. The data recorder then checks its memory for the recorded data set or record closest to the end of the set period of time that the communication device has signalled to the data recorder to look back.

[0086] A further aspect the present invention provides a core sample orientation system configured to provide an indication of the orientation of a core sample relative to a body of material from which the core has been recovered, the system including a hermetically sealed core sample orientation data gathering device deployable as part of a downhole core sample assembly.

[0087] Communication means may be arranged to communicate obtained core sample orientation data to a remote orientation data indication display device having an orientation data display.

[0088] A further aspect of the present invention provides a hermetically sealed core sample orientation data gathering device when deployed as part of a core sample orientation system for providing an indication of the orientation of a core sample relative to a body of material from which the core has been extracted.

[0089] The orientation data gathering device may include communication means for providing core sample orientation data to a remote orientation data electronic device having an orientation data display.

REFLEX EXHIBIT 1013 - 235/432

[0090] Thus, the orientation data gathering device of the present system being hermetically sealed avoids risk of ingress of liquid when the downhole, thereby leading to more reliable data gathering operations without the need to recover the device prematurely in order to repair or replace a faulty device, or risk completing a core sampling operation but find at the surface that no data can be recovered and the core orientation cannot be accurately determined.

[0091] The orientation data gathering device may be connected to a standard greaser unit, thereby allowing known equipment to be used and avoiding the need for specialised greaser to be adopted. Because the orientation data gathering device is hermetically sealed to ensure no liquid gets in to the device when deployed downhole, and the device has communication means to send data signals to a remote display, no o-ring seal to the greaser is required. This saves on unreliable o-ring seals, reduces risk of damage through water ingress and loss of data, as well as the time saved in not having to recover the damaged device and redeploy a replacement.

[0092] The system may further include timer means to commence multiple time intervals for the device to obtain orientation data. A time interval may be synchronised at an orientation reading time and the time interval related to a predetermined time interval. This may be achieved by use of the remote orientation data electronic communication device. System start up, setup, stop and data recovery functions may be carried out using the remote orientation data electronic communication device to operate the orientation data gathering device.

[0093] The orientation data gathering device may have one or more visual indicators to show an operator one or more required directions of rotation of a recovered core sample assembly for determining orientation of the core sample, and once a required core sample orientation has been established, the remote orientation data electronic communication device may interrogate the orientation data gathering device to obtain orientation data.

REFLEX EXHIBIT 1013 - 236/432

[0094] Communication between the orientation data gathering device and the remote orientation data electronic communication device is by wireless communication, such as infra red communication.

[0095] The remote orientation data electronic communication device may include a display to show visual information relating to the obtained orientation data, such as an indication that sufficient data has been obtained, that the data is correctly and safely stored and/or that data has been transferred from the orientation data gathering device to the remote orientation data electronic communication device.

[0096] The orientation data gathering device may include one or more visual and/or audible indicators relating to a direction of rotation of the device when determining core sample orientation and/or when a required core sample orientation has been determined. For example, illuminated indicators may be provided on the device, such as on an end of the exposed when the greaser is removed. However, the greaser does not have to be removed, as the light can actually be seen through the existing holes in an off the shelf greaser. A particular colour, number of lights or direction indication may illuminate to indicate that the device and the core sample need rotating in one direction, and a different colour, number of lights or direction indication may illuminate to show an opposite rotation direction is needed. These may be augmented by or replaced byaudible indications, such as respective numbers of 'bleeps'. An illuminated and/or audible indication may be given when a required core sample orientation is achieved. For example, both direction lights or audible signals may be given at the same time.

[0097] The remote orientation data communication device may also give an indication of the required direction of rotation and/or required core sample orientation.

[0098] The remote orientation data communication device may include or be a handheld unit. This unit may include a battery for power, which may be a rechargeable battery.

[0099] A further aspect of the present invention provides a method of obtaining core sample orientation data, the method including:

a) deploying a core sample orientation data gathering device as part of a core sample gathering system;

b) obtaining a core sample from a subsurface body of material using the apparatus;

c) using the orientation data gathering device to determine the orientation of the core sample relative to the subsurface body of material; and

d) using a remote communication device to obtain from said orientation data gathering device data relating to the orientation of the core sample.

[00100] The method may further include hermetically sealing the core sample orientation data gathering device prior to deployment.

[001 01] Following recovery of the device, core orientation indications may be given by one or more illuminated and/or audible indications. Coloured indications may be used to determine a required orientation of the core sample. For example, the orientation data gathering device may include lights, such as LEDs, whereby an indication is given to rotate the core sample in a first direction or in a second opposite direction to obtain a required core sample orientation position, or lights may be used to indicate when a required orientation position has been obtained.

[00102] The method may include deploying the orientation data gathering device leading a greaser. The greaser device may preferably be a standard greaser.

[00103] Multiple time intervals may be measured by the device. These time intervals can be used to determine data gathering events, such as position, magnetic flux, gravity, velocity, acceleration etc. A time interval can be synchronised to a specific downhole data gathering event.

[00104] Data may be obtained from the orientation data gathering device by communication with a remote device, such as by an infra red link or other wireless communication, such as radio link, between the orientation data gathering device and an orientation data communication device.

[00105] A data gathering device according to one or more forms of the present invention does not continuously take 'core orientation' readings while in use. Instead, such a device determines when the device is 'motionless' (through its in-built firmware algorithms and sensors) before taking orientation readings. This arrangement of orientation recording confirms that the device only records valid data, i.e. while motionless, as the in-built sensors would otherwise present faulty or indeterminate readings.

[00106] If an operator erroneously selects a time interval for 'core orientation' (via the handheld unit while the data gathering device is still in motion), after retrieving the core sample, algorithms programmed into the device will determine the 'best-approximate' time interval relative to the device being 'steady' or 'motionless' at a time before or after a time selection by the operator using a hand held unit to communicate with the device as part of an embodiment of the system. The event and time difference will also be reported to the operator to confirm acceptance of that recorded data.

[00107] After core retrieval, the data gathering device provides an indication, using one or more light emitting diodes (LEDs), used to determine correct orientation of the core sample after rotating the device and core tube assembly in either direction (no indication of left or right direction is required). The LEDs do not necessarily indicate direction, but provides 'multi-level-speed' LED flashing rates, followed by a steady ON state LED illumination to determine correct core orientation. One or more other systems using various colours and flash rates, etc could be employed.

[001 08] According to one or more embodiments of the present invention, before inserting the down-hole data gathering device into a drill hole, and after retrieving the same unit with the obtained core sample, the wireless handheld unit can start/stop or interrogate the down-hole device without having to remove or unscrew the unit from the drill-string or core tube sections. The handheld unit does not need to be attached, screwed in, mounted to or wedged to any part of the tubing or GCOU assembly during any operation).

[001 09] Start/stop operations, setting the exact time for orientation, interrogating and recording 'confirmed-accurate' operator orientation procedure, may all be performed using a remote wireless hand-held unit communicating with the data gathering device unit that was down the drill hole.

[001 10] Visual indication of core sample orientation may be provided through at least one aperture in a sidewall of a section of a downhole assembly. Core sample orientation indications may be as light through at least one aperture in the sidewall of a section of the downhole assembly, such as a greaser unit. Core sample orientation visual indications may be provided from one or more light emitters via at least one light reflector, and preferably reflecting that emitted light out through the at least one aperture.

[001 11] Whenever a core sample is drilled out from underground and placed on the surface, the core sample must be re-orientated to its original position that it was found.

[001 12] One or more forms of the present invention aims to remove or reduce the human error aspect of this process present in known systems.

[001 13] One or more forms of the present invention may include marking the core automatically and correctly, thus ensuring correct orientations of core samples and valid data is received by geologists.

[001 14] According to one aspect the present invention provides a core orientation marking system to provide an identification mark on a core indicating a desired orientation of the core extracted from a below ground body of material, the system including a core orientation identification device and a marker device, the core orientation identification device including an alignment means and a mounting means to mount the device relative to an end of a tube exposing an end of the core to be marked, the mounting means permitting the device to rotate about the end of the tube, the alignment means arranged to provide an indication of correct alignment of the device relative to a known alignment of the core, and the marker device providing an identifiable mark on the end of the core corresponding to the known alignment of the core.

[00115] The core orientation identification device may be manually rotated about the tube end or rotated by force of gravity.

[00116] The core orientation may be marked on an end of the core manually or automatically.

[001 17] The core orientation identification device may include at least one light arranged to indicate when the device is correctly orientated relative to the core to identify the required core orientation. The at least one light may be controlled to

flash to indicate orientation is not yet correct. The at least one light may be controlled to flash slower the nearer to correct orientation is achieved by rotating the device about the tube and shows steady when correct orientation is identified.

[001 18] Preferably, correct orientation is upright or substantially vertical relative to a corresponding upright or substantially vertical alignment of the orientation of the core.

[001 19] The device may include two or more biased opposed members permitting width adjustment for mounting the device to respective tubes of a variety of diameters. The biased opposed members may include at least two opposed jaws. The biased opposed members may include rollers that are brought into contact with the tube when the device adjusts to the diameter of the tube and wherein the device is arranged to rotate by force of gravity about the tube.

[00120] The marker device may be incorporated as part of the core orientation identification device.

[00121] A system according to one or more forms of the present invention may include electronics and a power source for the electronics, the electronics including one or more accelerometers to detect correct orientation of the device and to send a signal or cease send a signal to indicate the correct orientation of the device relative to the known orientation of the core.

[00122] The marker device may be actuated automatically to mark the core by remote operation from a remote controller.

[00123] Position of the marker relative to the core end may be adjustable by an adjustment means. Position adjustment may be height, distance towards/away from or both, relative to the core end. The adjustment means may be mounted to the device.

[00124] The core orientation identification device may include a latch mechanism that is released upon receipt of a release signal to effect marking the core. The latch mechanism including a solenoid operated release.

[00125] The system may include a remote controller arranged to send a signal to the device to effect core marking, and the device includes electronics to detect whether the device is correctly orientated relative to the core, and to effect marking if orientation of the core and device correspond, and to prevent marking if the orientation of the core and device do not correspond.

[00126] Successful marking is logged in a memory of the remote controller or transmitted to another device.

[001 27] Another aspect of the present invention provides a method of marking core orientation on a core sample, the method including using a device to automatically identify a correct orientation of the core, and marking that correct orientation on the core with a marker.

[00128] The method may include electronically actuating the marker to mark the core when the correct orientation is identified.

[00129] The method may include releasing a latch mechanism to release the marker to automatically mark the core. The latch mechanism may be released by receipt of a signal from a remote controller.

[001 30] Correct orientation of the device relative to the core may be achieved by rotating the device under the force of gravity about a tube containing the core.

[00131] Successful correct marking of the core may be logged in an electronic device. The electronic device may include the core orientation identifying device and/or the remote controller.

BRIEF DESCRIPTION OF THE DRAWINGS

[00132] Figure 1 shows a general arrangement of a drill assembly for obtaining core sample according to an embodiment of the present invention.

[00133] Figure 2 shows an example of a flowchart relating to a method according to an embodiment of the present invention.

[00134] Figures 3 and 4 show features of a known core sample orientation system.

[00135] Figures 5A, 5B and 6 show features of an arrangement of a core sample orientation system according to an embodiment of the present invention.

[00136] Figure 7 shows a core sample orientation data gathering device according to an embodiment of the present invention.

[00137] Figure 8 shows a hand held device for interrogating the core sample orientation data gathering device according to an embodiment of the present invention.

[001 38] Figure 9 shows an indicator window end of a core sample orientation device according to an embodiment of the present invention wherethrough indicator lights can show when illuminated.

[00139] Figures 10a and 10b show an alternative embodiment of a data gathering device of the present invention.

[00140] Figure 11 is a flow chart showing steps involved in obtaining usable recorded data of downhole survey equipment for determining orientation of a core sample according to an embodiment of the present invention.

[00141] Figure 12 is a flow chart of selection of useable data for use in determining core sample orientation according to an embodiment of the present invention.

[00142] Figures 13 to 15 show the device in place ready for marking the lower face of the core after orientation, and which is still within the core tube;

[00143] Figure 16 shows a view of the device with wheels used to locate and orientate the device via gravity before marking the core end face.

[00144] Figure 17 shows a sectional view of a portion of the device with a marker within a spring loaded cartridge.

[00145] Figure 18 shows a system according to an embodiment of the present invention including a remote device communicating with the device of figures 1 to 5 and used to confirm correct lower side core orientation.

[00146] Figure 19 shows a sectional view through a core marking device according to an embodiment of the present invention.

[00147] Figures 20a to 20c show respective side, perspective and end views of an alternative embodiment of a core marking device of the present invention.

[00148] Figures 21a to 21c show respective top, perspective and side section views of part of the alternative embodiment of a core marking device of the present invention shown in figures 20-20c.

[00149] Figures 22a to 22e are sectional views showing steps in the operation of an embodiment of the core marking device.

DESCRIPTION OF PREFERRED EMBODIMENT

[00150] The present invention includes an embodiment with detection of a core for retrieval by separation or 'breaking' from the body of material from which it is drilled.

[00151] A drill assembly 10 for drilling into a subsurface body of material 12 includes a drillstring 14 including a drill bit 16 an out tube 22 formed of linearly connected tube sections 22a,22b..., and an inner tube assembly 18 including an inner tube 24 for receiving the core 26 drilled from the subsurface body.

[00152] One or more pressure sensors 28,30,32 can be provided to detect pressure, change in pressure and/or pressure differential. These can communicate with the core orientation data recording device and/or an operator at the surface. Once a required pressure value is detected, drilling can cease and the core orientation device can record data relating to the orientation of the core, such as gravitational field strength and direction, and/or magnetic field strength and direction.

[001 53] Digital and/or electro-mechanical sensors, and/or one or more pressure sensors in a core orientation data recording device 20 are used to determine the core orientation just prior to the core break, and to detect the signal of the break of the core from the body of material.

[001 54] Data recorded or used may optionally include 'dip' angle ***a*** to increase reliability of core orientation results.

[001 55] Dip (also referred to as inclination or declination) is the angle of the inner core tube drill assembly with respect to the horizontal plane and can be the angle above or below the horizontal plane depending on drilling direction from above ground level or from underground drilling in any direction. This provides further confirmation that the progressive drilling of a hole follows a maximum progressive dip angle which may incrementally change as drilling progresses, but not to the extent which exceeds the 'dogleg severity'. The 'dogleg severity' is a

REFLEX EXHIBIT 1013 - 246/432

normalized estimate (e.g. degrees / 30 metre) of the overall curvature of an actual drill-hole path between two consecutive directional survey/orientation stations.

[00156] At the surface prior to obtaining the next orientation and core sample (or first if no previous core samples have been obtained for that drilling), a remote communication device (remote communicator) is set by an operator to a start time (say, T minutes).

[00157] The remote communicator communicates with the core orientation device and the core orientation device is then inserted into the drill hole.

[00158] After the set period of time (say, T minutes) has elapsed the core orientation device will begin normal operation to detect the signature of vibration indicating a core break.

[00159] Alternatively, pressure changes or levels may be detected to indicate a pre-break condition or period, such as pressure of mud/water within the inner tube increasing due to the core filling or nearly filling the inner tube holding the core.

[00160] The core orientation device preferably does not take any orientation measurements while vibrations (e.g. due to drilling) are present. A combination of mechanical, electromechanical and/or electronic sensors and software algorithms programmed into the core orientation device determine that the core orientation device is in motion while descending down the hole and during drilling and is therefore not yet needed to detect breaking of the core sample from the body of material.

[00161] When ascending to the surface for core retrieval after core breaking ascending, the core orientation device also preferably does not take any core orientation measurements.

[00162] If any measurements are taken during descending or ascending, due to sensitivity limitations of the sensors or during erratic silence segments, such measurements are discarded as they don't match the correct signature.

[00163] When the drilling ends and the driller is ready to break the core, the driller instructions will be to observe a period of Y seconds silence (no rotation), (this may typically be greater than 10s but no longer than 90 seconds). An Orientation & dip measurement will be taken during this period of silence. After breaking the core (breaking core operation should take less than, say 'X' seconds, which is typically X = 20s). Then the driller must wait, say 'Z' seconds silence (no rotation), (Z typically is greater than 90s). The purpose of these timings is to produce the correct 'signature'. If one of these criteria is not met then the sample can be discarded.

[00164] Alternatively or in addition, pressure created within the borehole by ,'mud and/or water (which may be pumped down the borehole from the surface) may be detected. One or more forms of the present invention may include detecting that pressure reaching a certain pressure. One or more pressure sensors may be provided on the drillstring, such as on the inner and/or outer drill tube or on the drill bit or on the core orientation data recording device. Detected pressure (such as pressure within the inner tube receiving the core) or pressure differential (such as pressure differential between/across the inner and outer tubes, may be indicative of the inner tube being nearly or totally full of core. This occurs before the core is separated from the subsurface body of material (such as by breaking the core from the body by a sharp pull back on the core) and hence provides a 'signature' or indicator that the core is about to be broken.

[00165] For at least one preferred embodiment as shown in the flowchart in Figure 2, core orientation to be validated by the correct 'signature' can best be described when:

a) 100 : Vibration above a threshold is not detected by the core orientation device, or is detected to be below a threshold, for period Y

b) 120: Core orientation measurement is taken during the 'vibration silence' period Y

c) 130: Followed by detection of noise from breaking the core from the subsurface body during a period X

d) 140: Followed by no detection of noise above a threshold, or is detected to be below a threshold, for period Z

e) 150: Orientation measurement is only retained if the above are present.

f) 160: The core orientation device can be configured to disregard detected signals or to not detect vibration or lack of vibration if & only if a, c, d above are present. If so, a fresh vibration silence signal 180 must then be detected before the core is broken.

g) 170: Optionally, dip measurement can be obtained during the period of no drilling prior to breaking the core (period Y), preferably if dip is within the set limits.

[00166] Once the required core orientation is obtained, the core orientation device may be shutdown or turned to low power standby mode 190 in preparation to be put into orientate mode 210 again.

[00167] Once the core orientation device is retrieved to the surface 200, an operator can set the device to an orientate mode 210. This can be done via the remote communication device communicating with the core orientation device 220.

[00168] The core orientation device can include one or more lights or other visual indicators, such as one or more display panels to give an indication of orientation direction and required orientation for marking the core.

[00169] According to one or more embodiments of the present invention, once in orientate mode, visual indications, such as flashing of one or more LEDs, will

indicate to the operator which direction to rotate the core to find the correct 'down side' for marking. The correct downside is the part of the core that was lowermost prior to separating from the subsurface body.

[00170] Once correct downside is identified 230, the operator will again effect communication to the core orientation device via the remote communication device. The remote communication device will then verify 240 that the correct orientation was achieved (based on the orientation data recorded) and then preferably permit the operator to perform another orientation operation if so desired 250.

[001 71] Optionally dip angle can be included in determining orientation of the core. The dip angle of the drill hole may be used to determine whether or not to use the orientation data obtained. For example, a correct core orientation sample may be determined from the aforementioned 'signature' steps being acceptable and the dip angle of the drill hole must also be within acceptable limits.

[001 72] According to at least one particular embodiment of the present invention, the dip is sampled as a reference prior to the first run of a new drill hole. This is regarded as a setup function.

[00173] A setup function can be selected on the remote communications device which then communicates to the core orientation device. For clarity, the core orientation device does not orientate the core, rather, it records signals indicative of the orientation of the core to be retrieved. The core orientation device is then lowered down the hole or aligned to the angle of the drill rods in the case of no hole yet to be drilled.

[00174] Once the core orientation device is down to the end of the hole the user will 'mark' the 'shot', preferably via use of the remote communications device.

[00175] The core orientation device is then retrieved and the remote communications device communicates to the core orientation device so that the core orientation device knows the dip (angle) of the drill hole.

[00176] Alternatively, the dip of the end of the hole can be manually entered into the remote communications device and this communicated back to the core orientation device.

[00177] For subsequent recordal(s) of orientation data after the first i.e. whenever a required subsequent signature occurs, and when the dip value is used, the dip is measured and if second dip value (D2) equals dip value 1 (D1)+/- E (where E typically equals 1.1) , the original signature data is retained. If D2 falls outside of D1+/-E, D2 is disregarded or discarded. The core orientation device will only store in memory values relating to the first signature.

[00178] For any subsequent run e.g. when the third signature occurs, if D3 = D2 +/- E the new signature is retained, otherwise it will be discarded if it falls outside of the required range. Only first compliant signature will be retained, etc.

[00179] One or more embodiments of the present invention may utilise the final compliant signature instead of the first compliant signature. A compliant signature is obtained when one or more signals indicative of the orientation of the core is/are obtained by the core orientation device during a period of no drilling vibration prior to detecting vibration from breaking the core and that being prior to a subsequent period of no drilling vibration.

[00180] In figures 3 and 4, a known prior art inner tube assembly 310 replaces a standard greaser with a two unit system 314,316 utilising a specialised greaser unit 314 and electronics unit 316 particular to the two unit system. The electronics unit is sealed to the greaser unit by o-rings, which have a tendency to fail in use and allow liquid into the electronics unit, risking loss of data and/or display failure. The electronics unit has an LCD display 318 at one end. This

allows for setting up of the system prior to deployment and to indicate visually alignment of the core sample when retrieved to the surface. The greaser unit is connected to a backend assembly 320 and the electronics unit 316 is connected to a sample tube 322 for receiving a core sample 324. The electronics unit is arranged to record orientation data every few seconds during core sampling. The start time is synchronised with actual time using a common stop watch. The units are then lowered into the drill string outer casing to commence core sampling. After drilling and capturing a core sample in the inner core sample tube, the operator stops the stop watch and retrieves the core sample tube back to the surface. At the surface, before removing the core sample from the inner tube, the operator views the LCD display 318, if it is still working, which steps the operator through instructions to rotate the core tube 322 until the core sample 324 lower section is at the core tube lower end 326 . The core sample is then marked and stored for future analysis.

[00181] Referring to figure 4, the known electronics unit 316 of figure 3 includes accelerometers 328, a memory 330, a timer 332 and the aforementioned display 318.

[00182] The system 340 according to an embodiment of the present invention will hereinafter be described with reference to figures 5A to 8.

[00183] An outer drilling tube 334 consisting of connectable hollow steel tubes 334a-n has an extension piece 336 connected inline between two adjacent tubes in order to compensate the length of the outer drilling tube in relation to the additional length gained by the inner tube assembly 340 due to the core sample orientation data gathering device 342.

[00184] The core sample orientation data gathering device 342 is a fully sealed cylindrical unit with screw threads at either end. A first end 344 connects to a standard length and size greaser unit 346 and a second end 348 connects to a

core sample tube 350. The greaser unit connects to a standard backend assembly 320.

[00185] There are no LCD display panels, indicators or switches mounted on the device. LED indicators are provided at one end 344, the greaser end, that are used in determining correct orientation of the core sample once the core and the device are recovered back a the surface. Figure 9 shows an example of the indicator end 344 of the core sample orientation data gathering device 342.

[00186] In figure 7, the core sample orientation data gathering device 342 is shown in close up. The end 344 for connecting to the greaser unit 346 includes a window (not shown in figure 7 - see figure 9). One or more LED lights are provided sealed within the device 342 behind the window. A coloured light indication is given to indicate which way (clockwise or anti-clockwise) the device 342 must be rotated to obtain a desired orientation of the core sample still within the inner tube assembly that is connected to the core sample orientation data gathering device 342. For example, a red light may be given to indicate to rotate the device (and thus the core sample) anticlockwise or to the left, and a green light may be given to indicate to rotate the device clockwise or to the right. A combined red and green indication, or a white light indication, or other indication can be given, such as flashing lights, to indicate that the core sample is correctly orientated and ready for marking.

[00187] Figure 8 shows an embodiment of the hand held device 360 which receives wirelessly receives data or signals from the core sample orientation data gathering device 342. The core sample orientation data gathering device 342 includes a transmitter which can use line of sight data transfer through the window, such as by infra red data transfer, or a wireless radio transmission. The communication device 360 can store the signals or data received from the core sample orientation data gathering device 342. The communication device 360 includes a display 362 and navigation buttons 364,366, and a data accept/confirmation button 368. Also, the hand held device is protected from

REFLEX EXHIBIT 1013 - 253/432

impact or heavy use by a shock and water resistant coating or casing 370 incorporating protective corners of a rubberised material.

[00188] Setting up of the device is carried out before insertion into the drill hole. Data retrieval is carried out by infra red communication between the core sample orientation data gathering device 342 and a core orientation data receiver (see figure 6) or communication device 360. After recovering the core sample inner tube back at the surface, and before removing the core sample from the tube, the operator removes the 'back end assembly, and the attached greaserunit. The operator then uses the remote communication device to obtain orientation data from the core sample orientation data gathering device using an line of sight wireless infra red communication between the remote device and the core sample orientation data gathering device. However, it will be appreciated that communication of data between the core sample orientation data gathering device 342 and the communication device 360 may be by other wireless means, such as by radio transmission.

[00189] The whole inner tube 350, core sample 352 and core sample orientation data gathering device 342 are rotated as necessary to determine a required orientation of the core sample. The indicators on the greaser end of the core sample orientation data gathering device 342 indicate to the operator which direction, clockwise or anti-clockwise, to rotate the core sample. One colour of indicator is used to indicate clockwise rotation and another colour to indicate anti-clockwise rotation is required. This is carried out until the core sample is orientated with its lower section at the lower end of the tube. The core sample is then marked for correct orientation and then used for analysis.

[00190] As shown in figure 9, the indicator window end 344 of the core sample orientation data gathering device 342 includes a window 372. The indicator lights can be seen through this window at least when illuminated. In this embodiment, two lights, red and green LEDs are shown. The left hand 374 (red) LED illuminates to indicate to a user to rotate the device 342 anti-clockwise. The right

hand 76 (green) LED illuminates to indicate to a user to rotate the device 342 anti-clockwise. When correct core sample orientation is achieved, both LEDs might illuminate, such as steady or flashing red and green, or another illuminated indication might be given, such as a white light (steady or flashing).

[00191] The visual and/or audible indicators, under certain site and/or environmental conditions, may not be sufficiently visible or audible. They may be hard to see in bright light conditions or hard to hear in loud working environments. Thus, an additional or alternative means and/or method may be utilised to ensure that the core sample has been correctly orientated. The outer casing or body or an end of the core sample data gathering device 342 may have angular degree marks. These may be scribed/ etched, machined, moulded or otherwise provided, such as by printing or painting, on the device 342. For example, as shown in figure 9 dashes equally spaced around the outside parameter (each representing one or more angular degrees of the full circle or perimeter). Further scribing of a number every five dashes starting with the number "0" then 5, 10, 15 etc. until 355. When the core is retrieved and the orientation device communicates with the hand held communicator 360, additional information is transmitted from the orientation device to the communicator 360, such as a number between Zero and 359 (inclusive) denoting an angular degree of rotation of the core sample orientation data gathering device and the core sample. When the core is oriented during one or more embodiments of the method of the present invention, scribing on the core sample orientation data gathering device 342 number on the top side should be the same as the number transmitted to the communicator 360, which re-confirms correct orientation. Thus, if the visual or audible means for indicating core orientation are not useful or available, then the core is oriented using the angular degree arrangement (top side) to match the number transmitted, and then this would be audited using the communicator 360 as is the case now.

[00192] The core sample orientation data gathering device of the present invention is hermetically sealed against ingress of water or other liquids, even at

operative borehole depths and conditions. No additional or alternative sealing, such as separate o-ring seals between the greaser and core sample orientation data gathering device or between the inner core tube and the core sample orientation data gathering device are required. Thus, maintenance or risk of ingress of liquid are not of concern.

[00193] Additionally, only the greaser needs to be separated from the core sample orientation data gathering device in order to obtain access and communicate with the device to obtain core orientation data. Likewise, setup prior to deployment is improved in terms of time and ease of use by not requiring a specialised back end assembly, rather, a standard greaser and back end assembly is used. This also improves compatibility with standard systems.

[00194] Obtaining core orientation is made easier by only requiring two colours lights to indicate one or other direction of rotation to establish correct core orientation prior to marking. The indicators form part of the sealed device and can be low power consumption LED lights. Alternatively, flashing lights may be used. For example, a certain frequency or number of flashes for one direction and another frequency or number of flashes for the other direction of rotation. A steady light could be given when correct orientation is achieved.

[00195] Confirmed correct core alignment is registered in the remote communication device 360. This provides for an audit trail, and the data can be readily transferred to computer for analysis and manipulation. This also provides reassurance of accuracy of sampling and orientation to operators, geologists and exploration/mining/construction companies.

[00196] In use, the core inner tube 350, data gathering device 342 and greaser 46 are connected together in that order and lowered into a core sampling outer tube having an annular diamond drill bit at the furthest end. Once a core sample is obtained, the inner tube assembly with the data gathering device and greaser are recovered back to the surface, the back end assembly 320 and greaser are

removed. Using an infra red link or other wireless link, the data gathering device is put into orientation indicating mode by the remote communication device 360. The core sample and data gathering device are then rotated either clockwise or anti clockwise to establish a required orientation position. The remote communication device is then used to communicate with the data gathering device to obtain core sample orientation data from the data gathering device. No LCD or other display is needed on the data gathering device that might otherwise risk leakage in use and ingress of liquid or failure of the display due to display power demands on the limited battery life or display failure due to the harsh environment downhole. The required orientation of the core sample is then marked and the core sample can be stored and used for future analysis. The received data can be transferred to a computer for analysis.

[00197] According to an alternative embodiment of the present invention shown in figures 10a and 10b, a data gathering device 380 houses the light emitters 374,376. Light from these emitters (e.g. LEDs) passes through the window 372 (shown in figure 9). Reference arrow A refers to the drill bit end direction, and reference arrow B refers to the backend assembly direction. An optical adapter 382 is provided at the end 342 of the device and which adapter extends into the greaser unit 346 when connected thereto. The optical adapter has a reflective material. The greaser unit 346 has apertures 384 that allow light therethrough. Light from the emitters is directed onto at least one reflector 386 of the adapter. The emitted and reflected light can be observed through the apertures 384 in the greaser. It will be appreciated that the adapter need not extend into a greaser. A tube section or other component having at least one aperture to observe the light through is sufficient. The red-green indications (or whatever selected colour combination of light is used) can be observed through the aperture(s) when rotating the device to obtain core sample orientation. Thus, advantageously, when the data gathering device and core sample are recovered from down the hole, the data gathering device need not be separated from the greaser in order to determine a required orientation of the core sample. Wireless communication to a remote device, such as a hand held device, to transfer data between the data

gathering device and the remote device, can also be effected by transmitting through the at least one aperture.

[00198] Embodiments of the present invention provide the advantage of a fully operating downhole tool/device without having to disconnect or disassemble any part of the tool/device from the inner tube and/or from the backend assembly or any other part of the drilling assembly that the tool/device would need to be assembled within for its normal operation. Disconnecting or disassembling the tool/device from the backend and/or inner tube risks failure of seals at those connections and/or risks cross threading of the joining thread. Also, because those sections are threaded together with high force, it takes substantial manual force and large equipment to separate the sections. High surrounding pressure in the drill hole means that the connecting seals between sections must function perfectly otherwise water and dirt may ingress into and damage the device. Having a tool/device that does not need to be separated from the inner tube and/or backend sections in order to determine core sample orientation and/or to gather data recorded by the device/tool means that there is less risk of equipment failure and drilling downtime, as well as reduced equipment handling time through not having to separate the sections in order to otherwise obtain core sample orientation. Known systems require end on interrogation of the device/tool. By providing a sealed device/tool and the facility to determine orientation of the core sample, by observing the orientation indications through one or more apertures in the side of the greaser or other section, reliability and efficiency of core sample collection and orientating is improved. Consequently operational personnel risk injury, as well as additional downtime of the drilling operation. Without having to separate the tool/device from the inner tube and/or backend, the orientation of the core sample can be determined and the gathered information retrieved with less drilling delay and risk of equipment damage/failure.

[00199] One or more forms of the present invention relate to asynchronous time operation for core sampling. The data recording events taken by the downhole data gathering device are not synchronized in time with the

communication device. That is, the communication device and the data gathering device do not commence timing from a reference time, and the data gathering device does not take samples (shots) a specific predetermined time intervals. For example the data gathering device does not take a three second sample every one minute with that one minute interval synchronized to the remote which would therefore know when each sample is about to take place. The communication device of the present invention is not synchronized to the data gathering device (the downhole survey or core orientation unit) i.e. asynchronous operation, and therefore the communication device does not know if or when a sample is being taken. Thus, obtaining an indication of core sample orientation is simplified over known arrangements.

[00200] A method and system according to one or more embodiments of the present invention will hereinafter be described with reference to the Figures, particularly Figures 11 and 12.

[00201] A communication device 360 can signal to the data gathering device 342,380 to activate or come out of a standby mode. However, if preferred, the data gathering device may already be activated i.e. it is not necessary to have the data gathering device switch on from a deactivated ('turned off') state.

[00202] The communication device 360 and the data gathering device 342,380 do not require to send or exchange time information from one to the other.

[00203] The communication device 360 does not mark start time and the actual start time is not recorded by or in the communication device 360.

[00204] The communication device 360 does not start a timer, its clock (preferably a 'real time' clock) is permanently running.

[00205] The data gathering device 342,380 does not record a start time as an initial reference time. Thus, it is not necessary to make a data gathering event

(shot) in a specific period of time beyond this reference time. The data gathering device does not start a timer, its own internal clock is always running.

[00206] No initial roll indication at the surface prior to deploying the device is required. Thus, no initial reference point is required before the device is deployed downhole of the data gathering device 342,380 is taken before lowering downhole as a reference "orientation point".

[00207] Importantly, the data gathering device only records data (takes 'shots') when it detects drilling is not occurring. That is, the data gathering device does not obtain or generate downhole data during drilling.

[00208] For the purposes of this invention, the phrase 'during drilling' means whilst drilling (i.e. rotation of the drill bit and drill string) is actually occurring rather than the general drilling operation as a whole. Data recording events ('shots') are not constantly taken on a set time period.

[00209] The data gathering device 342,380 of the present invention includes at least one vibration sensor, and preferably at least one of a gravity sensor, magnetic field sensor, accelerometer, inclinometer, and preferably a combination two or more of these devices. These 'sensors' are packaged into the data gathering device which is compatible for connection with downhole tubing, greasers and other instrumentation devices. The data gathering device is powered by an onboard battery, and preferably the data gathering device is hermetically sealed to prevent ingress of water and contaminants at pressure when 'downhole'. The data gathering device forms part of a system in conjunction with the communication device 60, and preferably any other equipment as needed.

[00210] The communication device may be incorporated in a remote controller. For example, a remote controller may be used to control or affect operation of the data gathering device. The remote controller may include an internal timer which

operates without synchronization with an internal timer of the data gathering device.

[00211] One form of the present invention provides the following method, whereby:

1. When the data gathering device 342,380 initially detects vibration 900 it wakes 902 from a standby mode. The device determines that such vibration is because drilling is occurring. While awake at this stage the device also checks 904 whether there is a valid communication from the communication device. The device then goes back into a standby mode until vibration is not detected above a threshold, which is preferably set to be zero detected vibration. This has a valuable benefit of saving battery power. Known prior art devices, such as in WO 2006/024111 and related cases, continuously draw or on a frequent periodic basis draw on battery power, thereby vastly decreasing battery life and reducing the amount of time a device can spend in operation before the battery needs recharging or replacing. Extending battery life is a major benefit to drilling operations which occur in remote locations. Less capital investment is needed in equipment to maintain a charged standby device, and less time is lost in changing over equipment if battery life is extended.

2. Once no vibration has been detected for a desired period (e.g. 6 seconds) 906, the data gathering device determines that drilling has stopped, the device activates ('wakes up' from its standby or 'sleep' mode) 908 and records first data ('takes a 1st roll shot') 910. The device will self check 907 whether there is no vibration for the desired period of time.

3. A desired period of time later (e.g. 4 seconds) 912, the data gathering device records second data ('takes a 2nd roll shot') 914. If the second data recording event (roll) is close to the immediately previous first data recording event (1st roll shot) 910 and found to be acceptable 916, then the

second data recording event 914 is saved to a memory and time stamped 918.

[00212] The data gathering device then stops recording data and reverts to its standby or 'sleep' mode and either:

a) waits at step 5 below) 920, or
b) continues to step 4) below 922.

4. If the second data recording event (2nd roll shot) is not similar 922 to the first data recording event, then a third data recording event is carried out ('3rd roll shot'). This 3rd shot's roll is compared to the 2nd shot's roll. If the third data recording event is close to the second data recording event, then the third data recording event is stored in memory and time stamped, and the data gathering device reverts to standby ('sleep') mode. Thus, the device compares the most recent data recording event to the immediately previous data recording event. This process continues until:
   a. one data recording event (roll) is accepted and time stamped 918; or
   b. a limit or preset maximum number of recording events is reached (e.g. five 'shots') 924

   then the data gathering device will revert to standby or 'sleep' mode (shut down) and wait for the next vibration to occur 900.

5. When the next vibration 900 event is detected, the data gathering device comes out of standby mode ('wakes up') 904. This allows the data gathering device to determine that vibration is occurring and then it reverts to standby mode ('goes to sleep again') in preparation to be re-activated at the next 'No vibration' event 906. This occurs without the need to take or record any downhole data (rolls) in memory. If none of the roll shots are acceptable, the device is set to wake on the next vibration and then go to sleep again 926.

6. Steps 1) to 5) are repeated until the data gathering device receive a signal to enter an Orientation process'. The signal is preferably provided by the communication device.

[00213] Remote controller (communication device)

[00214] A user inputs 950 to the communication device one or more of the following:

1. the last time when drilling has stopped
2. immediately prior to breaking off the core sample off;
3. immediately after breaking off the core sample.

[00215] The communication device identifies ('marks') a time 952, using its own real time clock, when a user selects that the core sample is to be retrieved.

[00216] Importantly, the present invention does not need or rely on an indication indicative of when during the drilling process the core sample was detached from the body of material.

[00217] Once the core sample has been broken off, and the time is marked by the communication device before, during or after that core breaking off event, the core assembly is retrieved to the surface.

[00218] Once the data gathering device is retrieved to the surface 954, the communication device communicates 956 to the device, and the device confirms communication received 958. The communication device signals to the data gathering device to halt surveying 960 and the communication device obtains from the data gathering device recoded data prior to a defined time elapsed period 960. At this point in time the communication device refers to its own internal clock and subtracts from this the time that the user indicated that the core

was being retrieved 962. This time difference is transmitted to the data gathering device as a time value, which device enters a core orientation process stage 964.

[00219] Core orientation process

[00220] The data gathering device receives the time value (days, hours, minutes and seconds) (e.g. from the communication device) and enters an orientation process stage 964, as mentioned above.

[00221] The data gathering device deducts this time value from a predetermined time value in its own internal timer. The data gathering device checks for a saved data event 'roll' that occurred previous to this time in its memory, and retrieves that roll value. No time measurement is measured, and the data gathering device does not provide a time value indicative of when the core sample was broken off. Such a value is not required to determine orientation of the core sample.

[00222] The data gathering device then provides visual indications of which direction to rotate the core sample to indicate the 'downside' of the core. As discussed earlier in this specification, light indicators, such as the flashing coloured LEDs, and the described method of use, can be employed to indicate to the user which direction to rotate the barrel to the required 'downside'. For such use, a user rotates the barrel until the flashing stops and a solid ON LED indicates that the barrel is in the 'downside' position.

[00223] User inputs to the communication device to indicate that the core barrel, and therefore the core sample, is in the correct orientation. The communication device communicates to the data gathering device and verifies that this has occurred. This 'orientation' or 'roll' value is not transferred from the data gathering device to the communication device.

[00224] One or more further embodiments of the present invention will hereinafter be described with reference to the accompanying Figures 13 to 19.

[00225] The present invention involves a system 460 utilising a core sample (core) orientation identification device 410 and a marker device 490. These components may be provided separately as discrete items or may be connected together, such as by an adjustment means.

[00226] Typically the extracted inner core tube 412 is placed on a support 480 for ease of work. After the inner core tube 412 containing the core sample 414 has been orientated to the up/down position (corresponding to its orientation underground before being drilled out), the pen/pencil marker 416 associated with the device 410 is adjusted to a pre-set height corresponding to the diameter size of the core tube used. The device is then activated by pulling the opposed handles 420,422 apart to a 'latched' position of the device ready to be released when signaled to do so.

[00227] The unit is placed on the core tube by opening the jaws assembly 424 sufficiently wide to allow the opposed jaws to be placed about the external diameter of the tube 412. This embodiment includes three jaws 426,428,430. The first 426 and third 428 jaws oppose the second jaw 430 with the second jaw operating between the first and third jaws. It will be appreciated that two opposed jaws can be sufficient. One or both of the opposed jaws can have a bifurcated end with rollers thereon rather than the three jaws with rollers.

[00228] The device is positioned such that the marking pen/pencil faces the exposed core face TV.

[00229] By closing the opposed jaws together, the rollers 432 on the jaws contact the external surface of the core inner tube 412, which allows the device to find its correct position via gravity so that the marker is pointing to the lower portion of the core face A. The device hangs or suspends from the tube.

[00230] The device contains a self-feeding and extruding wax nib which will always be extended ready to mark the core face A. This can be position adjusted via the adjustment means 418.

[00231] Electronics within the housing 434 of the device include one or more central processors, accelerometer(s), infrared communication components, other supporting components and a battery power supply 442.

[00232] There is also an electromechanical releasing device 440 to allow the marking pencil to stamp the core face when required. This may be in the form of a solenoid which when activated, releases the compressed spring 444 previously latched when the handles 420,422 were pulled in opposite directions to set the latch 446 against a latch plate 448. As is shown, the handle 420 has sliders 450,452 which slide in bushes 454.

[00233] In preferred embodiments the electronics can operate to confirm the up/down position of the device using its accelerometer(s) and other components.

[00234] One or more light emitting diodes (LEDs) 456 can be provided behind a window 458 on the device. The window may be an IR window for communication between the device and the remote controller. The LED(s) can be set to illuminate or extinguish when not centered. Ip a preferred embodiment, the LED(s) flash when the device is not centred and are steady when it is centred (see infrared window 56 pointed to by the hand-held controller 460 in Figure 18).

[00235] When self-alignment is completed by the device, the hand-held controller 60 signals the device via infrared communication to release the marking pen/pencil. The embedded electronics confirms that the unit is properly aligned before allowing activation to release the marking pen/pencil towards the exposed core face and thereby mark its lower end to indicate correct orientation.

[00236] Figure 17 shows a sectional view of the pencil holder 416. A wax pencil core 462 is held within the tubular body 464. The pencil core is spring 466 biased to protrude from the open end 468 of the holder. A removable screw cap 470 allows replacement of the pencil core.

[00237] Height adjustment for the marker is achieved by releasing the adjustment mechanism 418, raising or lowering the pencil holder 416 relative to the support 472 attached to handle 420 (seen in Fig 13, not shown in Fig 17).

[00238] In figures 20a to 20c, an embodiment of a self aligning system 560 (aligning with respect to the core 512), including core sample orientation device 510 and a marker device 590

[00239] Typically the extracted inner core tube 512 is placed on a support 580 for ease of work. After the inner core tube 512 containing the core sample 514 has been orientated to the up/down position (corresponding to its orientation underground before being drilled out), the pen/pencil marker 516 associated with the device 510 is adjusted to a pre-set height corresponding to the diameter size of the core tube used. The device is then activated by extending the pencil assembly to a 'latched' position "L" of the device ready to be released when signaled to do so.

[00240] The unit is placed on the core tube by opening the jaws assembly 520,522 sufficiently wide to allow the opposed jaws to be placed about the external diameter of the tube 512. This embodiment includes three jaws 520a,522,520b. The first 520a and third 520b jaws oppose the second jaw 522 with the second jaw operating between the first and third jaws. It will be appreciated that two opposed jaws can be sufficient. As a component saving measure and to provide a simplified device, no rollers are provided on the ends of the arms/jaws 520a,520b,522. Gravity causes the device to rotate to a stable orientated position ready for operation.

[00241] The device is positioned such that the marking pen/pencil faces the exposed core face 'A'.

[00242] Figures 21a to 21c show an embodiment of the core sample orientation device 510 portion of the system.

[00243] There is also an electromechanical releasing device to allow the marking pencil to stamp the core face when required. Figure 21c shows the internal release mechanism. A rotary cam 550 is driven by motor when triggered. The cam acts on the lever arm 552 to retract the spring loaded detent 554. When operated, the retracted detent disengages from a latch 557 allows a spring 560 loaded slide arm 558 (shown in dotted phantom) to release. This causes the marker (e.g. wax pencil) to release and mark the end of the core. A damper spring 556 cushions the end of travel. Resetting is by pulling the latch back.

[00244] Figures 22a to 22e show steps in operation of the electro-mechanical mechanism to release the marker to mark the core. As the cam 550 rotates, the pivoting lever arm 552 is depressed. This retracts the spring loaded detent 554 and releases that detent from engagement with the latch 557. The spring 560pulls the latch which causes the marker (not shown) to contact the end of the core and mark it.

THE CLAIMS DEFINING THE INVENTION ARE AS FOLLOWS:

1. A method of determining orientation of a core obtained by drilling the core from a subsurface body of material, the method including:

a) determining that vibration from drilling is at or below a nominated level of vibration,

b) recording data relating to orientation of the core to be retrieved, the data recorded using a downhole core orientation data recording device,

c) separating the core from the subsurface body, and

d) obtaining from the core orientation data recording device an indication of the orientation of the core based on the recorded data obtained when the vibration from drilling was below the nominated level of vibration and before the core was separated from the subsurface body.

2. A method according to claim 1, wherein the nominated level of vibration is when drilling has ceased for that drill.

3. A method according to claim 2, wherein when drilling having ceased is at the end of a drilling activity immediately prior to separating the core.

4. A method according to any one of claims 1 to 3, wherein no further data relating to core orientation is needed to be obtained for use after separating the core from the subsurface body.

5. A method according to any one of the preceding claims, wherein, once drilling has ceased, a predetermined time interval elapses before the core is separated from the subsurface body.

6. A method according to any one of the preceding claims, wherein the first time period is a predetermined time determined to be between drilling having ceased and the core is subsequently separated from the subsurface body of material.

7. A method according to claim 6, wherein the predetermined first time period does not exceed 90 seconds.

8. A method according to claim 7, wherein the predetermined first time period is between 10 seconds and 60 seconds.

9. A method according to any one of the preceding claims, including determining a dip value for use in determining the core orientation.

10. A method according to claim 9, wherein the dip value is obtained during the period of drilling vibration below the threshold.

11. A method according to claim 10, wherein the dip value is obtained when drilling has ceased but prior to separating the core from the body.

12. A method according to any one of the preceding claims, wherein the core is separated from the subsurface body by breaking.

13. A method according to any one of the preceding claims, wherein separating the core from the subsurface body takes less than 1 minute.

14. A method according to any one of the preceding claims, including criteria of identifying that there is no drilling vibration, subsequently separating the core from the subsurface body and then subsequently determining that there is a period of no drilling vibration.

15. A method according to claim 14, wherein, in one or more of the criteria therein is not met, the data sample or the core orientation data obtained is disregarded for the purpose of determining core orientation.

16. A method according to any one of the preceding claims, wherein separation of the core from the subsurface body of material is determined by detecting acceleration, change of acceleration, tension or strain or change in tension or strain resulting from a force applied to the core and the core separating from the subsurface body.

17. A method according to claim 16, wherein the acceleration or change in acceleration is detected by at least one accelerometer provided within the core orientation data recording device.

18. A method according to claim 17, wherein the acceleration or change in acceleration detected is in a Z direction in line with an advancing drilling activity.

19. A method according to claim 16, wherein the tension or strain or change in tension or strain is detected by at least one strain gauge within or on a portion of the downhole equipment associated with obtaining the core.

20. A method according to claim 19, wherein the at least one strain gauge is within or on the core orientation data recording device or within or on a section of drill tube.

21. A method according to any one of the preceding claims, wherein once the core orientation is obtained, the core orientation data recording device is

shutdown or turned to low power standby mode in preparation to be put into an orientation recording mode again.

22. A method according to any one of the preceding claims, including retrieving the core to the surface, and setting the core orientation data recording device to an orientate mode.

23. A method according to claim 22, including setting the orientate mode using a remote communication device communicating with the core orientation data recording device.

24. A method according to claim 22 or 23, the core orientation data recording device including one or more lights or other visual indicators to give an indication of required orientation and/or direction to rotate the core for marking the core.

25. A method according to claim 24, whereby, once in orientate mode, visual indications indicate to an operator which direction to rotate the core to find the correct 'down side' of the core for marking the orientation thereof.

26. A method according to any one of claims 22 to 25, whereby, communication to the core orientation data recording device is effected via the remote communication device and the remote communication device will then verify that the correct orientation was achieved based on the orientation data recorded.

27. A method according to any one of the preceding claims, including detecting pressure, a pressure differential or change in pressure to indicate that drilling should cease in order to then determine orientation of the core.

28. A method according to claim 27, including detecting increase in the pressure or detecting the pressure being above a threshold pressure in an inner core tube receiving the core.

29. A method according to claim 27, including detecting a difference in pressure between the interior of the inner core tube and exterior of the inner core tube.

30. A method according to any one of claims 27 to 29, wherein pressure or change in pressure, or pressure differential of a drilling fluid is detected.

31. A method according to claim 30, wherein the drilling fluid is drilling mud, water or a combination thereof.

32. A method according to any one of the preceding claims, wherein the core orientation data recording device records an indication of core orientation after a predetermined period of time for the vibration being at or below the nominated level.

33. A system for determining orientation of a core using a method according to any one of the preceding claims, the system including at least a core orientation data recording device and a core drilling assembly.

34. A system according to claim 33, including a remote communication device configured to communicate with the core orientation data recording device to identify a required orientation of the core.

35. A system according to claim 33 or 34, the core orientation data recording device including at least one visual indicator to show one or more of a direction to rotate the core to obtain the required orientation or a visual indication to show the required orientation.

36. A system according to any one of claims 32 to 35, including at least one pressure sensor to detect pressure or change in pressure or a pressure differential.

37. A system according to claim 36, wherein the at least one pressure sensor is provided on or within a core orientation data recording device and/or on or within a portion of a drilling tube.

38. A system according to claim 36, wherein the at least one sensor is operatively connected to the core orientation data recording device.

39. A method of determining orientation of a core sample obtained by drilling from aboveground into a subsurface body, the method including:

a) operating a downhole data gathering device to detect when vibration from drilling is below a threshold;

b) recording data relating to a core sample being obtained by the drilling when vibration from drilling is below a threshold;

c) providing an input to a user operated communication device;

d) the communication device identifying a time of the user input to the communication device;

e) retrieving the data gathering device and core sample;

f) communicating between the communication device and the retrieved data gathering device;

g) determining from indications provided by the retrieved data gathering device an orientation of the core sample.

40. A method according to claim 39, the input to the communication device including one or more of an indication of a most recent occurrence when drilling

ceased, an indication immediately prior to separating the core sample from the subsurface body, an indication after separating the core sample from the subsurface body.

41. A method according to claim 39 or 40, the communication device controlling the data gathering device to cease gathering data.

42. A method according to any one of claims 39 to 41, the retrieved data gathering device providing survey data to the communication device or another receiver, the survey data being or derived from recorded data obtained when the no vibration had been detected.

43. A method according to claim 42, the data gathering device providing to the communication device survey data relating to recorded data obtained prior to a defined period of time.

44. A method according to claim 43, wherein the defined period of time is provided to the retrieved data gathering device from the communication device.

45. A method according to claim 43 or 44, wherein the defined period of time is used by the data gathering device to identify recorded data obtained during surveying at a time prior to the amount of the defined time.

46. A method according to claim 45, wherein the identified recorded data provided as survey data to the communication device or other receiver is or derives from recorded data recorded by the data gathering device at a period in time closest to the time prior to the amount of defined time than any other recorded data event.

47. A method according to any one of claims 39 to 46 wherein, the data gathering device detects that vibration is occurring and waits until a subsequent no vibration event occurs before recording data.

REFLEX EXHIBIT 1013 - 275/432

48. A method according to any one of the preceding claims 39 to 47 wherein, the data gathering device detects multiple consecutive survey values during a period of no vibration.

49. A method according to claim 48, wherein acceptable recorded data is identified with a timestamp relating to real time.

50. A method of obtaining downhole survey data in a borehole created by drilling, the method including advancing a data gathering device into the borehole, the data gathering device determining that vibration is below a predetermined threshold, bringing the data gathering device out of a standby mode during a period when vibration is determined to be below the threshold, recording data during the period, returning the data gathering device to a standby mode when vibration is determined to be above the threshold or sufficient said data has recorded.

51. A method according to any one of claims 39 to 50 wherein, the threshold is no vibration from drilling.

52. A method according to any one of claims 39 to 51, whereby, when drilling is stopped; the data gathering device records core orientation data; the core is subsequently separated from its connection with the ground; the communication device signals to the data gathering device to identify the recorded core orientation data that was immediately prior to separating the core sample from the ground; and using that recorded core orientation data to identify orientation of the core sample.

53. A system for use in determining orientation of a core sample obtained by drilling from aboveground into a subsurface body, the system including a data gathering device arranged and configured with control means to detect when vibration from drilling is below a threshold, and activation means to cause the

data gathering device to record data during the period of vibration below the threshold.

54. A system according to claim 53, wherein the threshold is no vibration from drilling.

55. A system according to claim 53 or 54, the data gathering device including a timer providing a timestamp for recorded data events.

56. A system according to claim 53, 54 or 55, including a communication device including communication means arranged and configured to communicate a time value to the data gathering device, the data gathering device including processing means which determines from the received time value the closest recorded data obtained immediately prior to a time determined by subtracting the received time value from a current time value.

57. A system according to claim 56, wherein the current time value is provided by the communication device to the data gathering device.

58. A core orientation marking system to provide an identification mark on a core indicating a desired orientation of the core extracted from a below ground body of material, the system including a core orientation identification device and a marker device, the core orientation identification device including an alignment means and a mounting means to mount the device relative to an end of a tube exposing an end of the core to be marked, the mounting means permitting the device to rotate about the end of the tube, the alignment means arranged to provide an indication of correct alignment of the device relative to a known alignment of the core, and the marker device providing an identifiable mark on the end of the core corresponding to the known alignment of the core.

59. A system according to claim 58, wherein the core orientation identification device is manually rotated about the tube end or rotated by force of gravity.

REFLEX EXHIBIT 1013 - 277/432

60. A system according to claim 58 wherein the core orientation is marked manually.

61. A system according to claim 58 or 59, wherein the core orientation identification device includes at least one light arranged to indicate when the device is correctly orientated relative to the core to identify the required core orientation.

62. A system according to claim 61, wherein the at least one light is controlled to flash to indicate orientation is not yet correct.

63. A system according to claim 61 or 62, wherein the at least one light is controlled to flash slower the nearer to correct orientation is achieved by rotating the device about the tube and shows steady when correct orientation is identified.

64. A system according to any one of claims 58 to 63, wherein correct orientation is upright or substantially vertical relative to a corresponding upright or substantially vertical alignment of the orientation of the core.

65. A system according to any one of claims 58 to 64, wherein the device include two or more biased opposed members permitting width adjustment for mounting the device to respective tubes of a variety of diameters.

66. A system according to claim 65, wherein the biased opposed members include at least two opposed jaws.

67. A system according to claim 66, wherein the biased opposed members include rollers that are brought into contact with the tube when the device adjusts to the diameter of the tube and wherein the device is arranged to, rotate by force of gravity about the tube.

68. A system according to any one of claims 58 to 67, including electronics and a power source for the electronics, the electronics including one or more accelerometers to detect correct orientation of the device and to send a signal or cease send a signal to indicate the correct orientation of the device relative to the known orientation of the core.

69. A system according to any one of claims 58 to 68, wherein the marker device is actuated automatically to mark the core by remote operation from a remote controller.

70. A system according to claim 69, wherein the device includes a settable latch mechanism that is released upon receipt of a release signal to effect marking the core.

71. A system according to claim 70, wherein the latch mechanism including a solenoid operated release.

72. A system according to any one of claims 58 to 71 wherein a remote controller is arranged to send a signal to the device to effect core marking, and the device includes electronics to detect whether the device is correctly orientated relative to the core, and to effect marking if orientation of the core and device correspond, and to prevent marking if the orientation of the core and device do not correspond.

73. A system according to claim 72, wherein successful marking is logged in a memory of the remote controller or transmitted to another device.

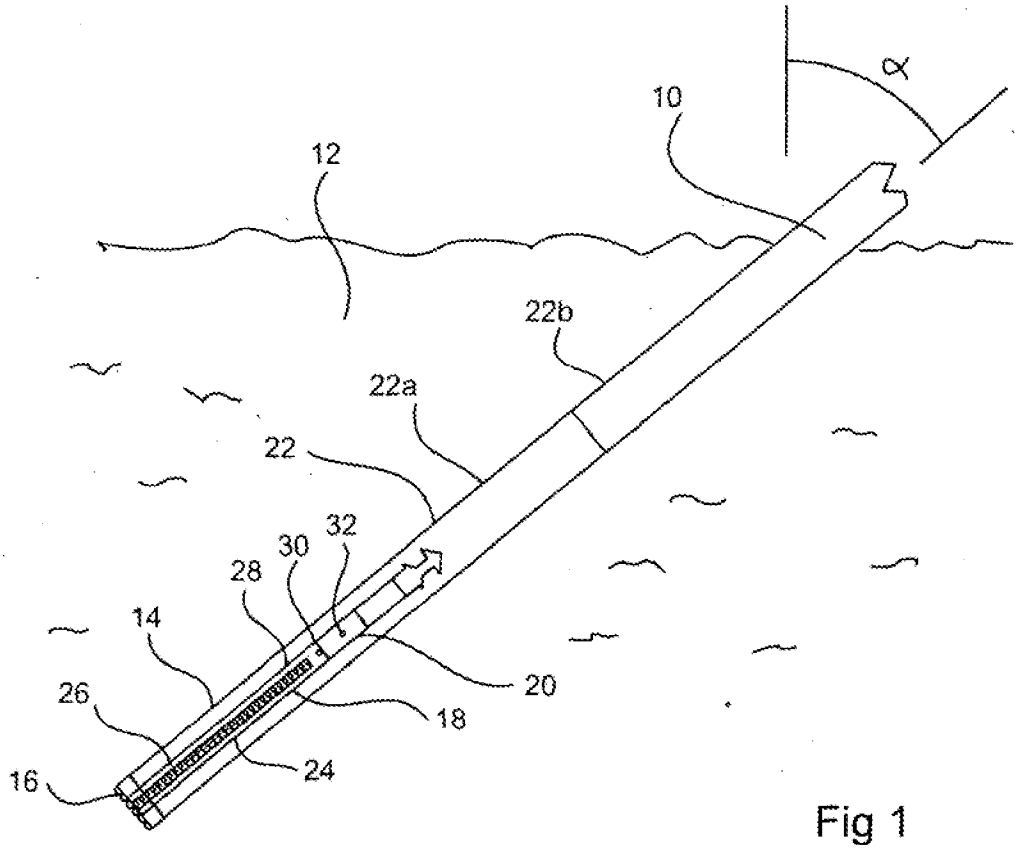
α
10
12
22b
22a
22
32
30
28
14
20
26
18
24
16

Fig 1

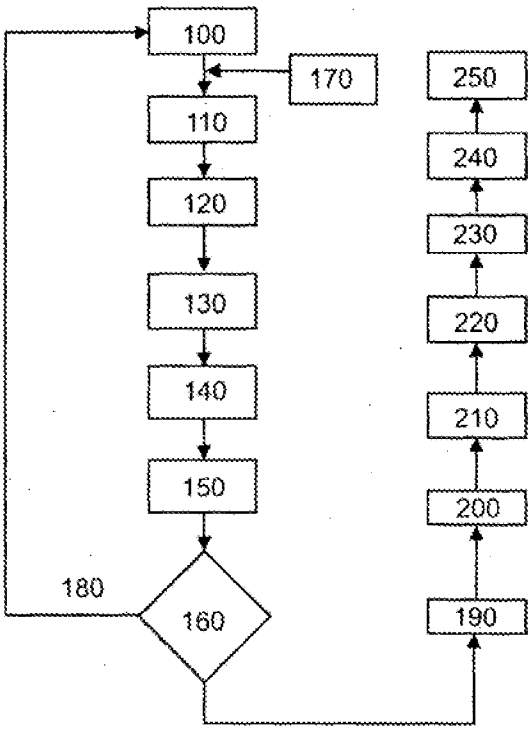
100
170
110
120
130
140
150
180
160
190
200
210
220
230
240
250

Fig 2

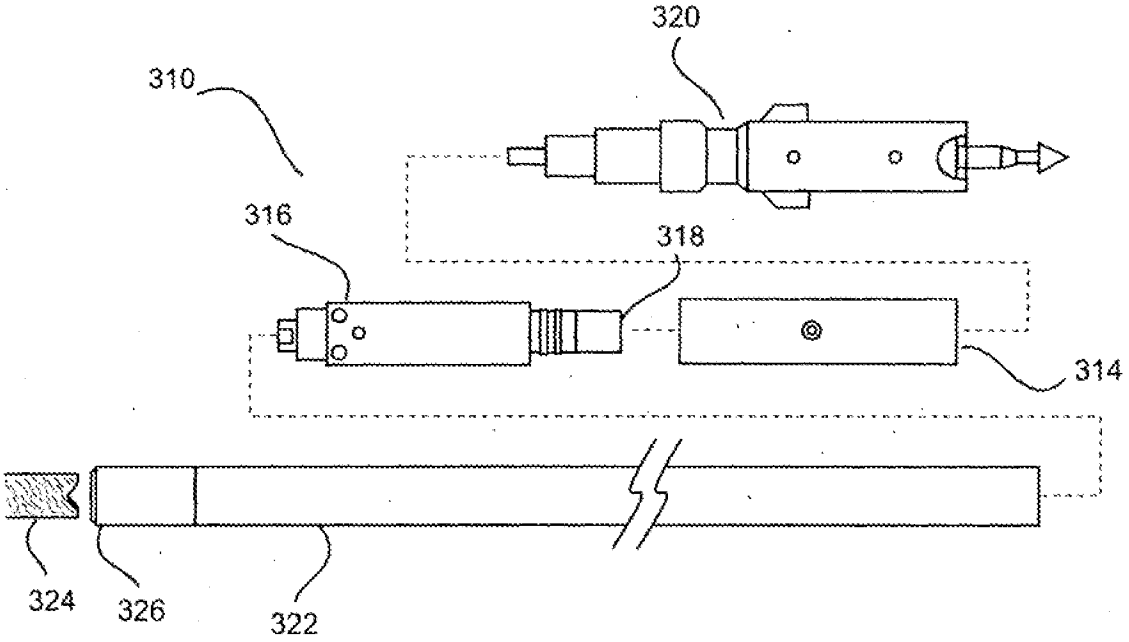

Fig 3

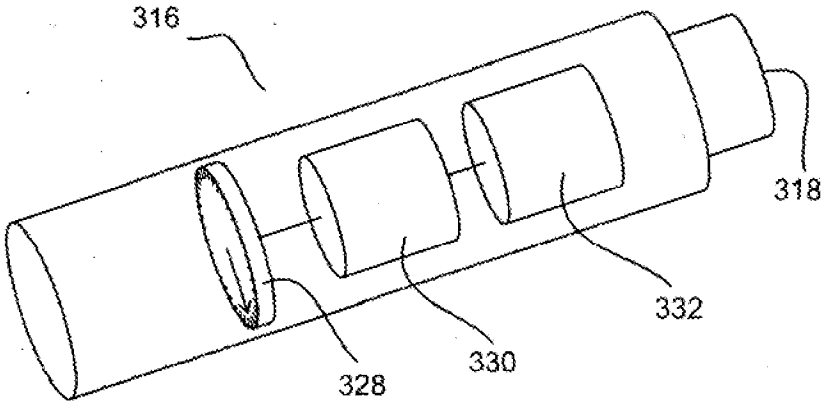

Fig 4

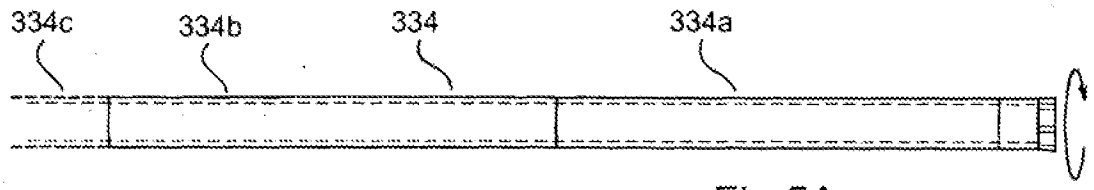

Fig 5A

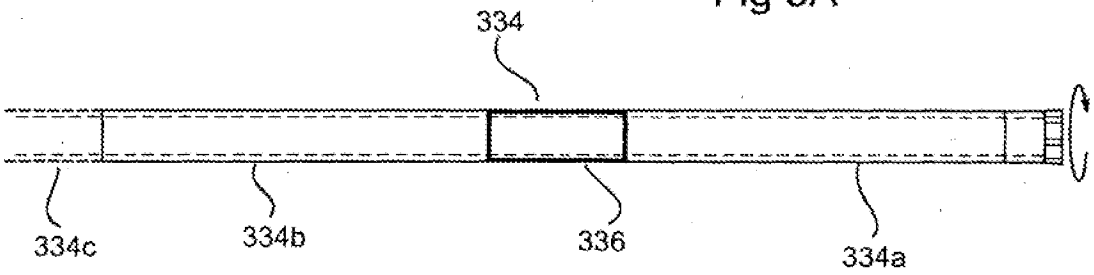

Fig 5B

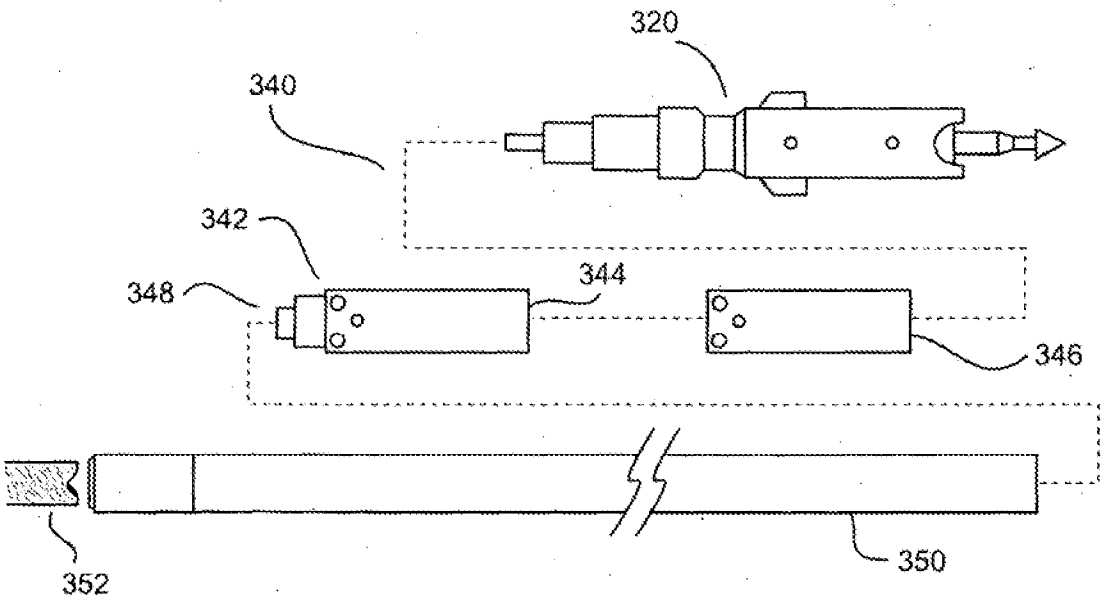

Fig 6

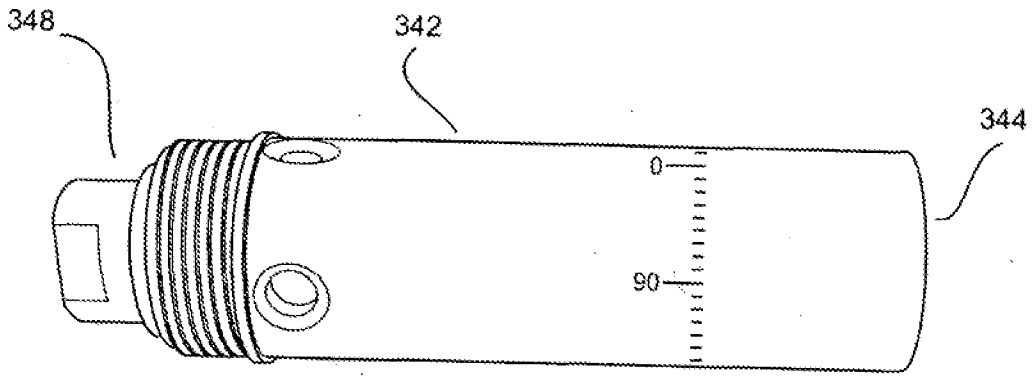

Fig 7

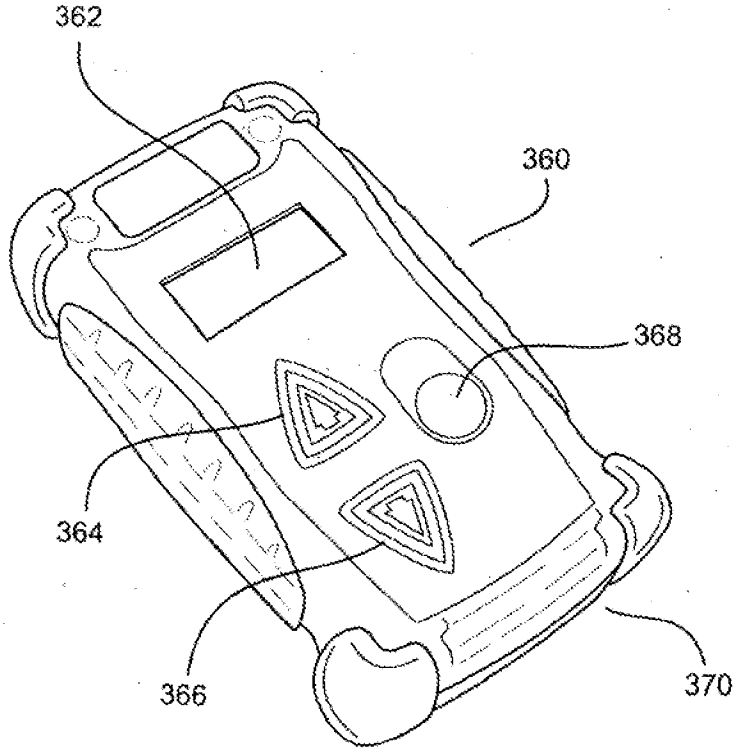

Fig 8

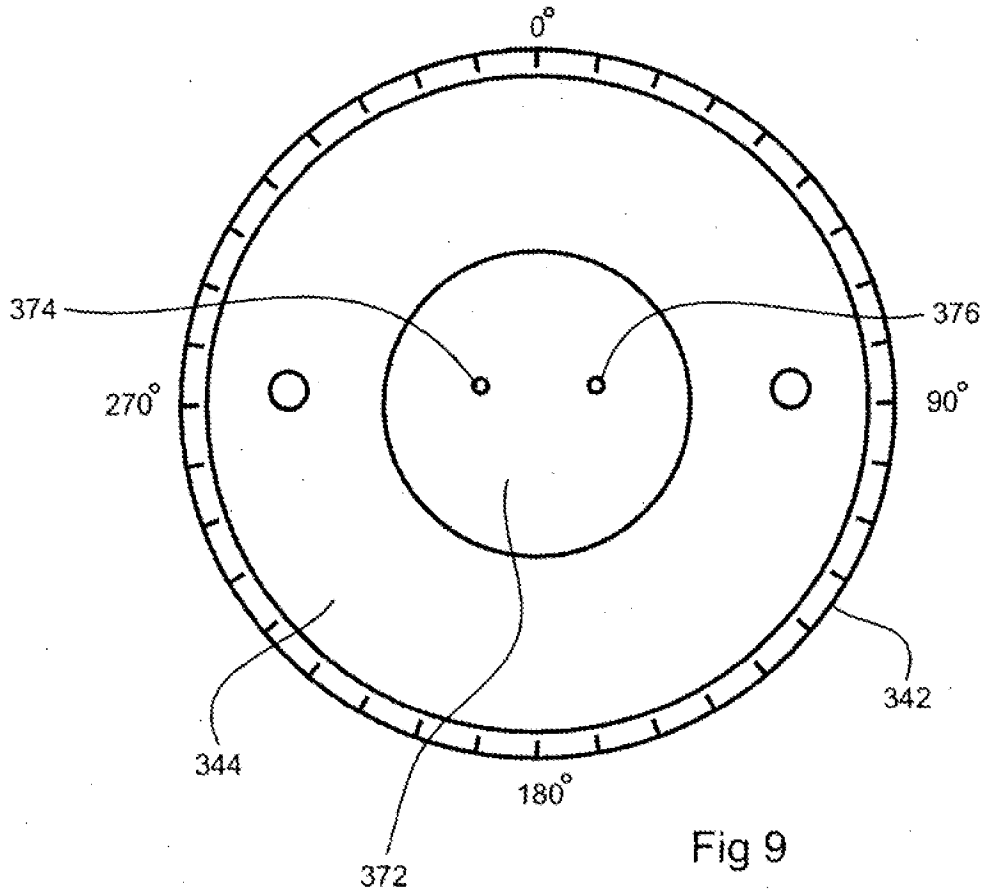

Fig 9

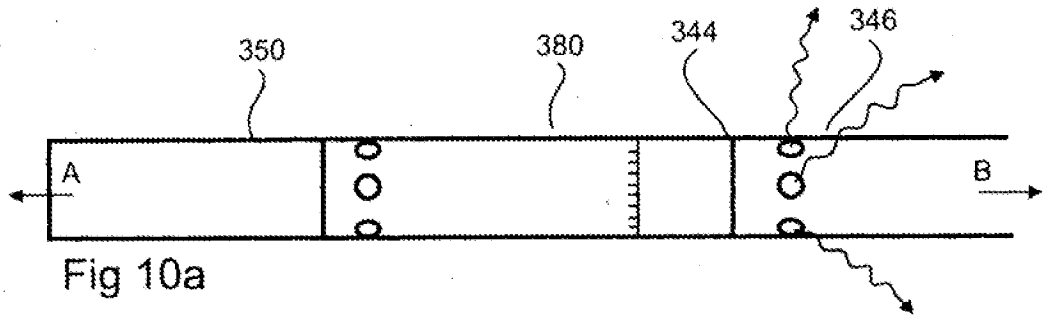

Fig 10a

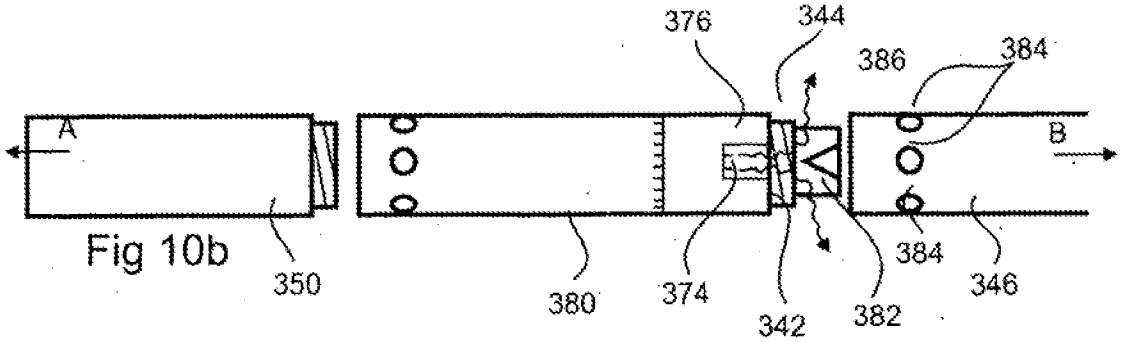

Fig 10b

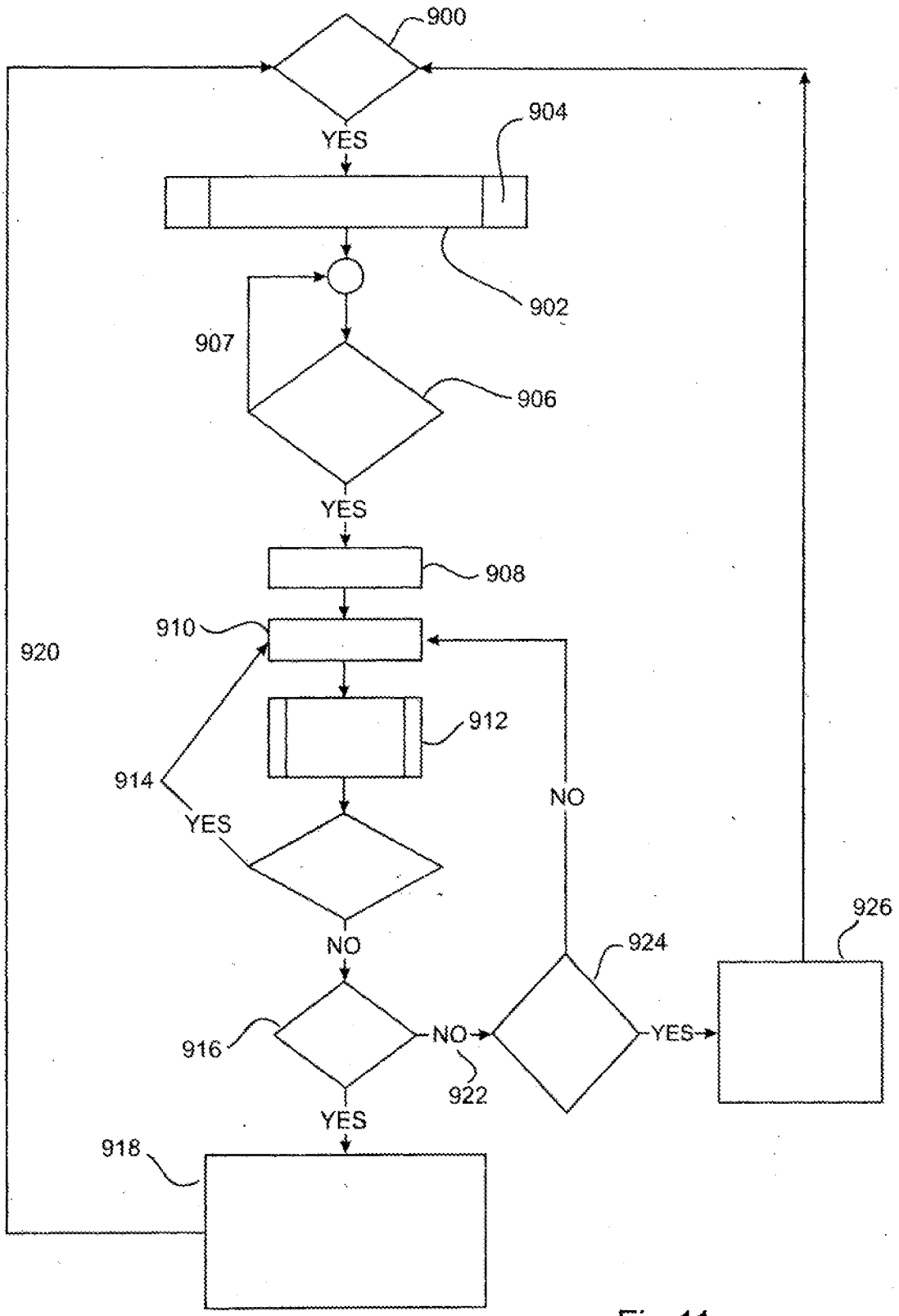
900
YES
904
902
907
906
YES
908
910
920
912
914
YES
NO
NO
926
924
916
NO
YES
922
YES
918

Fig 11

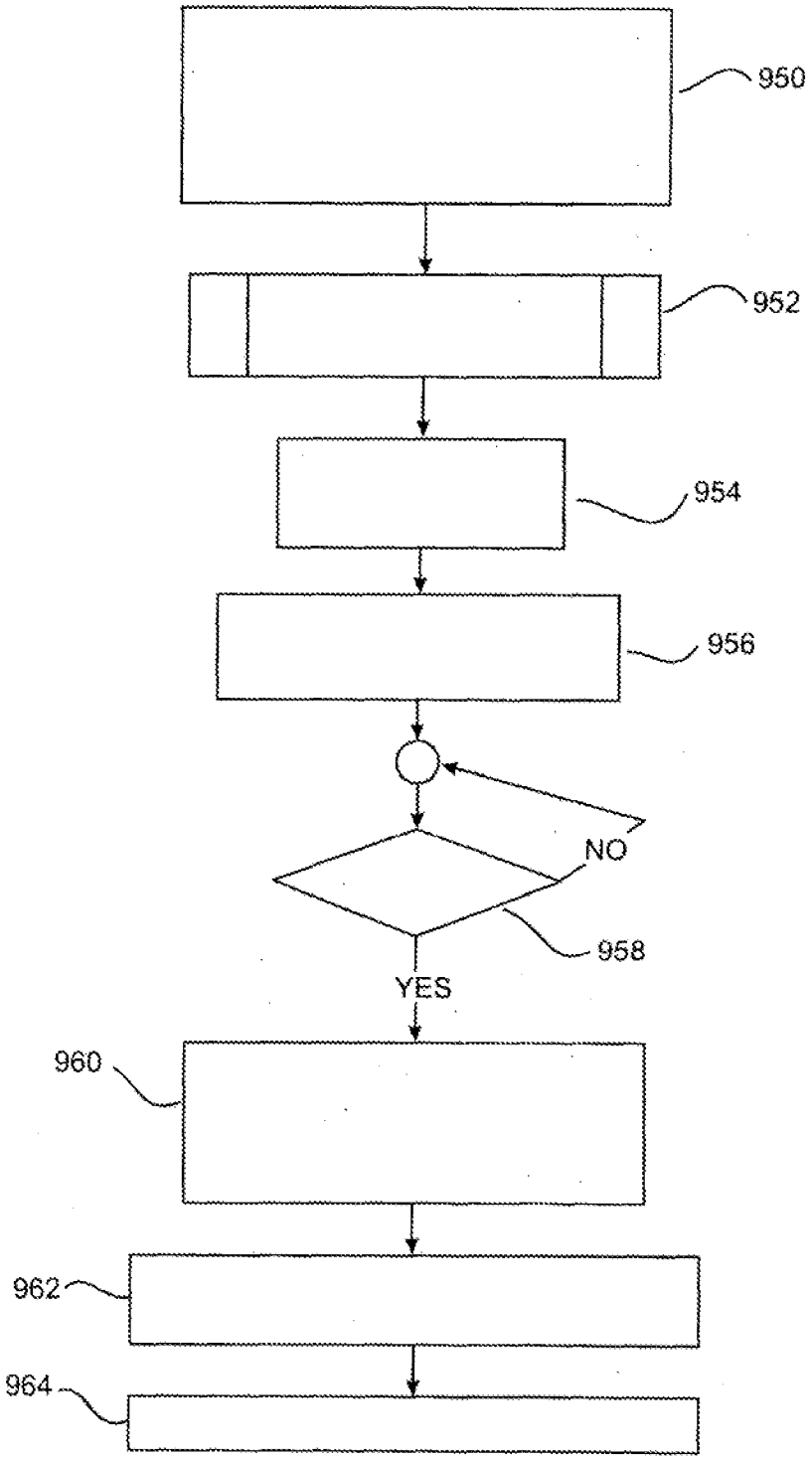

Fig 12

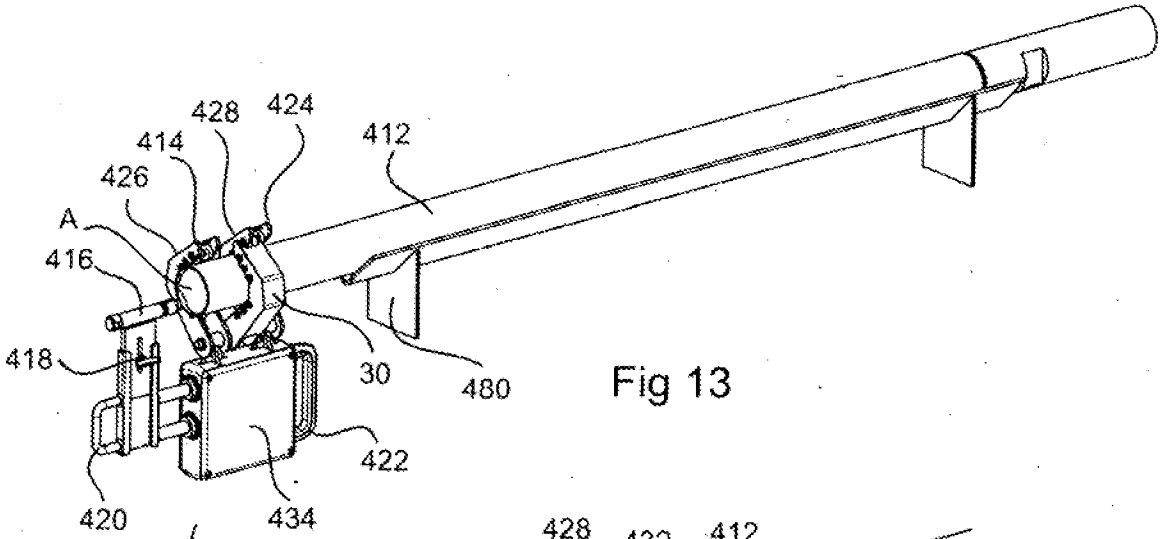

Fig 13

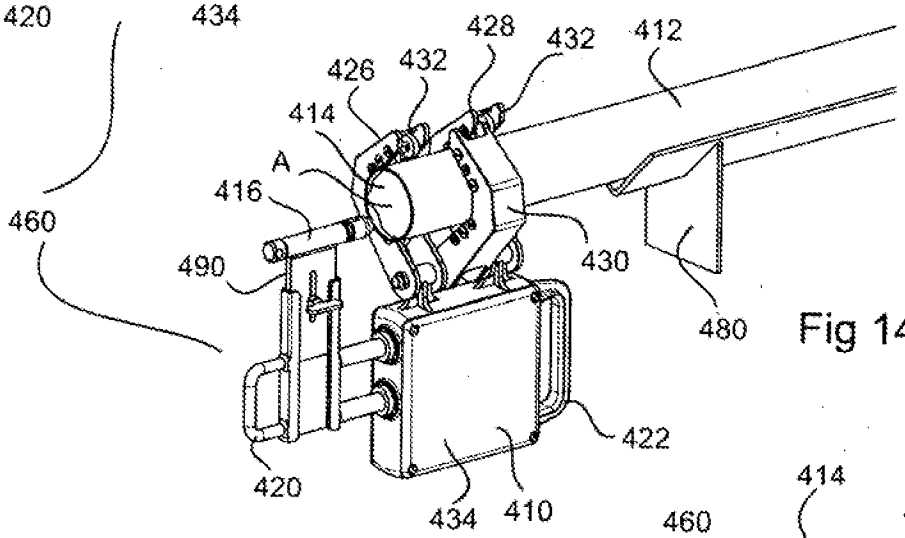

Fig 14

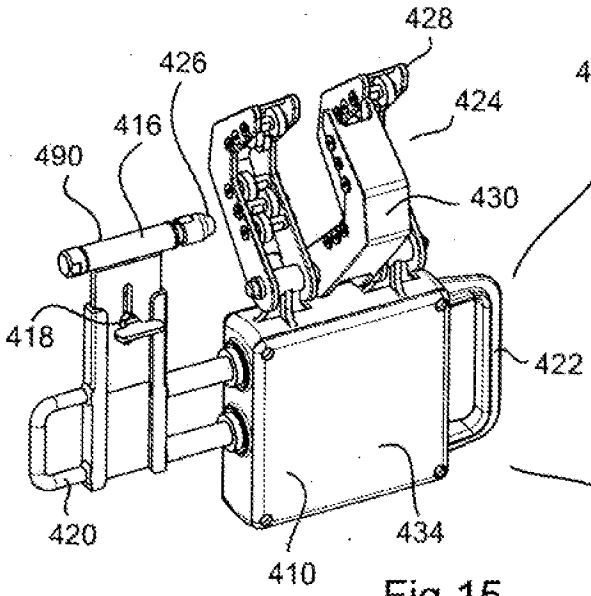

Fig 15

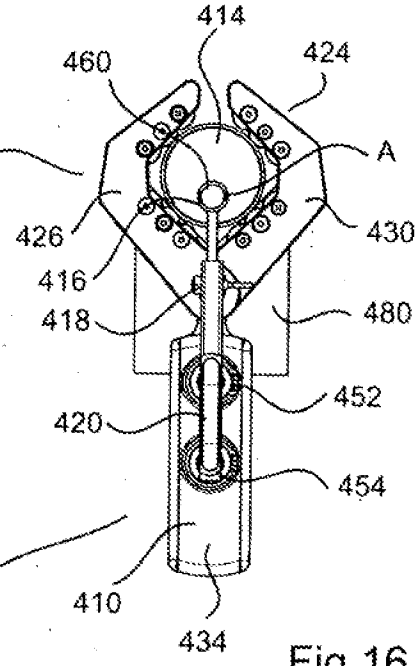

Fig 16

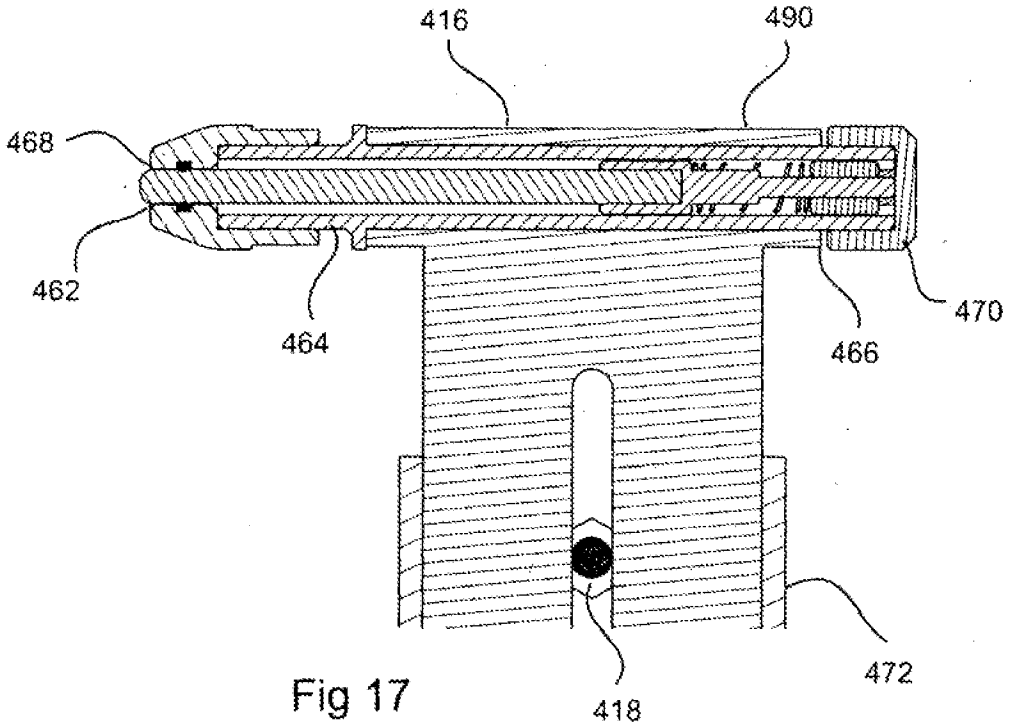
416
490
468
462
464
466
470
472
418

Fig 17

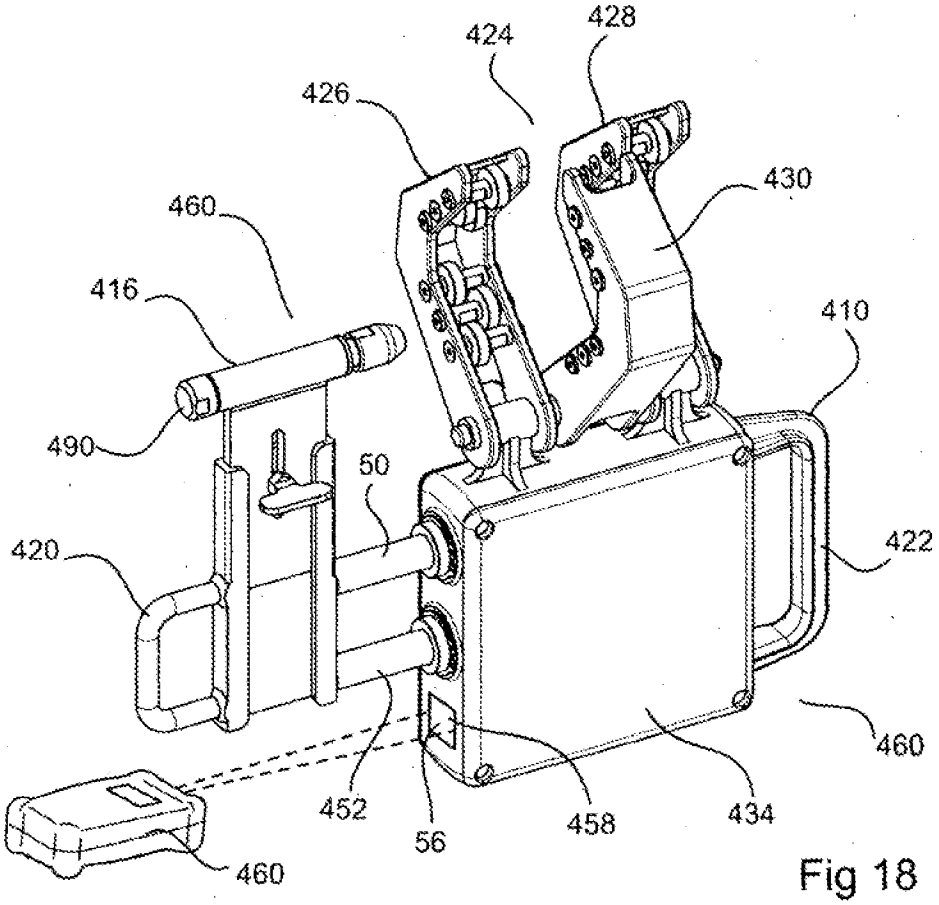
424
428
426
430
460
416
410
490
50
420
422
460
452
56
458
434
460

Fig 18

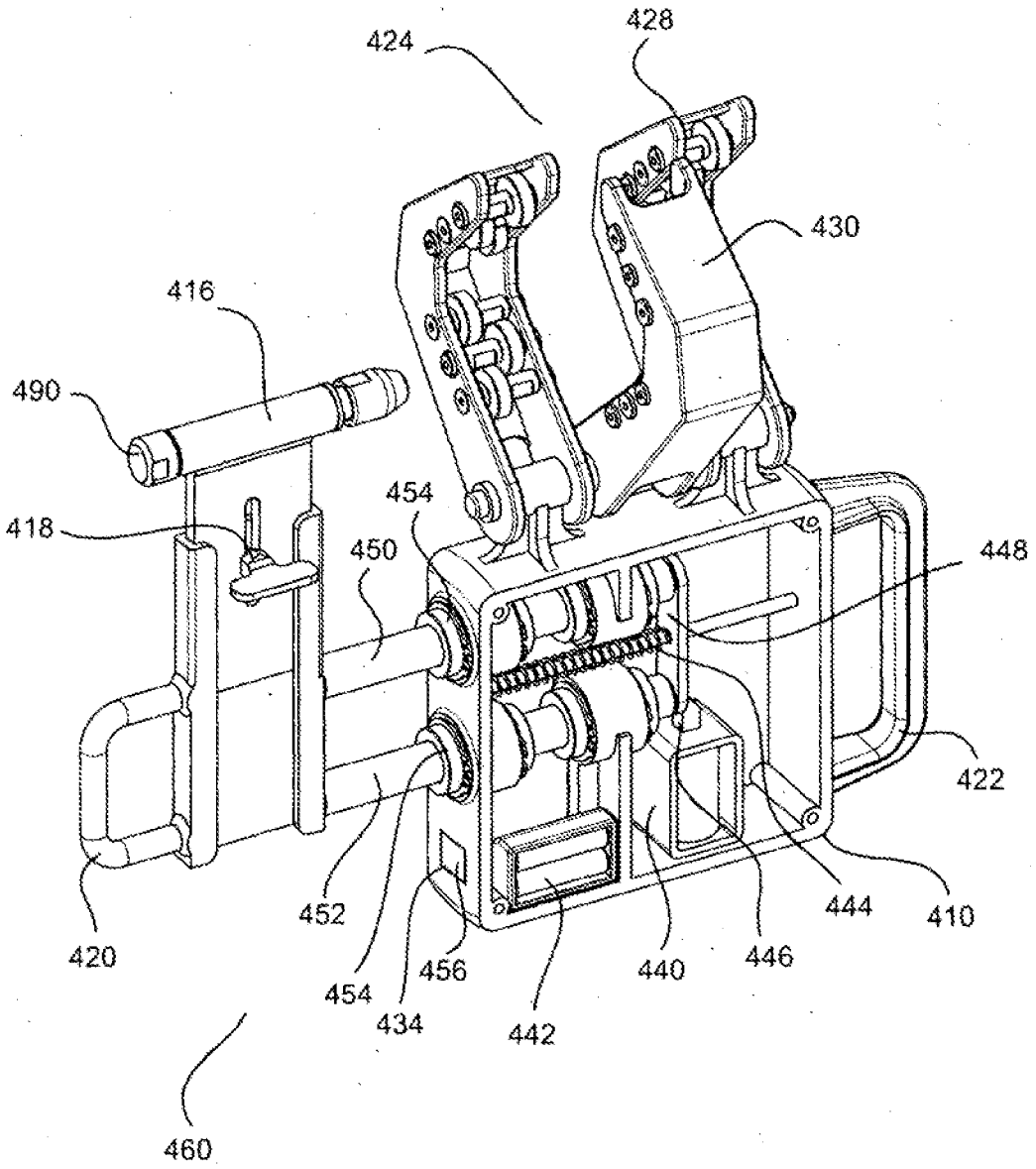
424
428
430
416
490
418
454
450
448
422
452
444
410
420
454
456
440
446
434
442
460

Fig 19

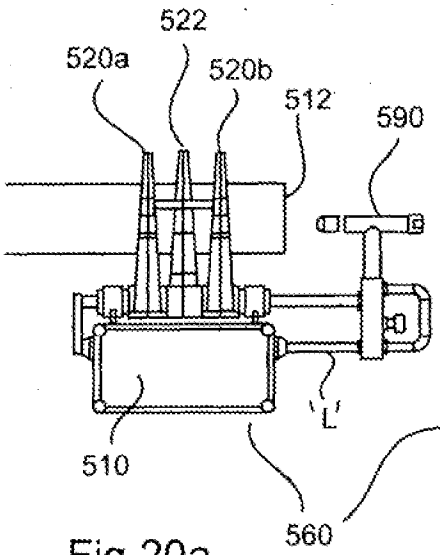

Fig 20a

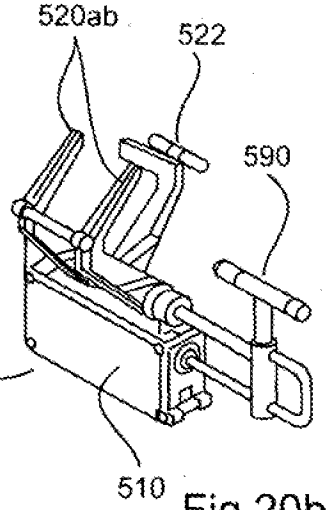

Fig 20b

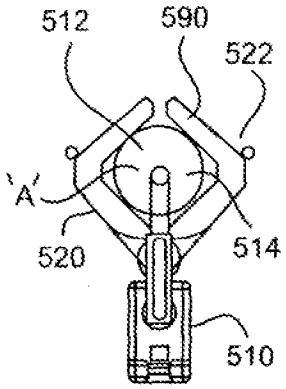

Fig 20c

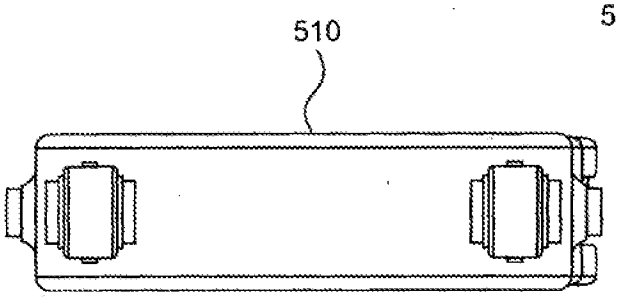

Fig 21a

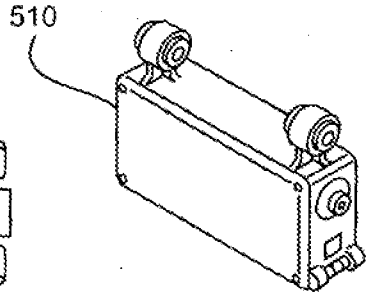

Fig 21b

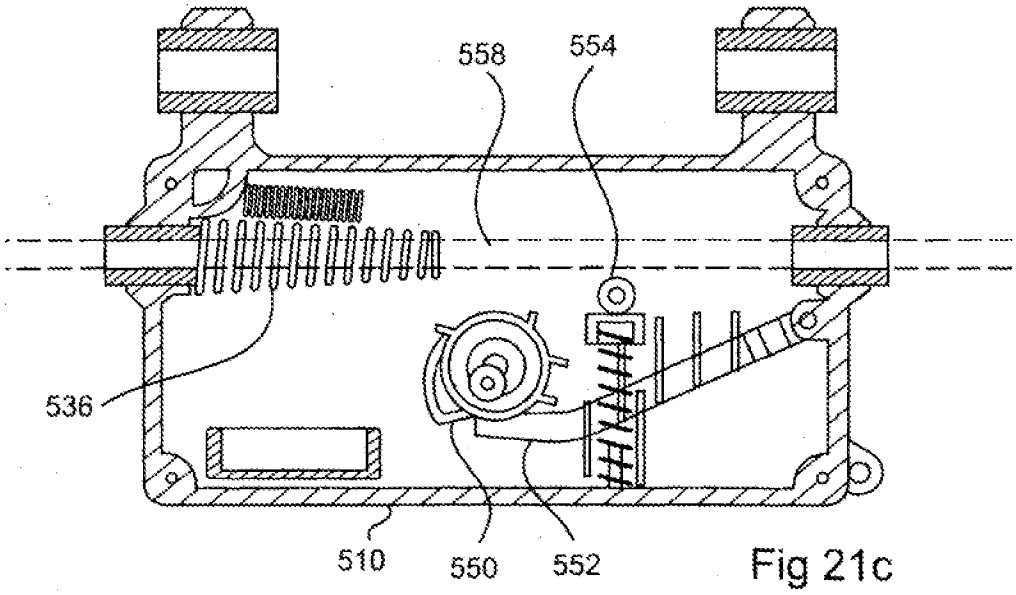

Fig 21c

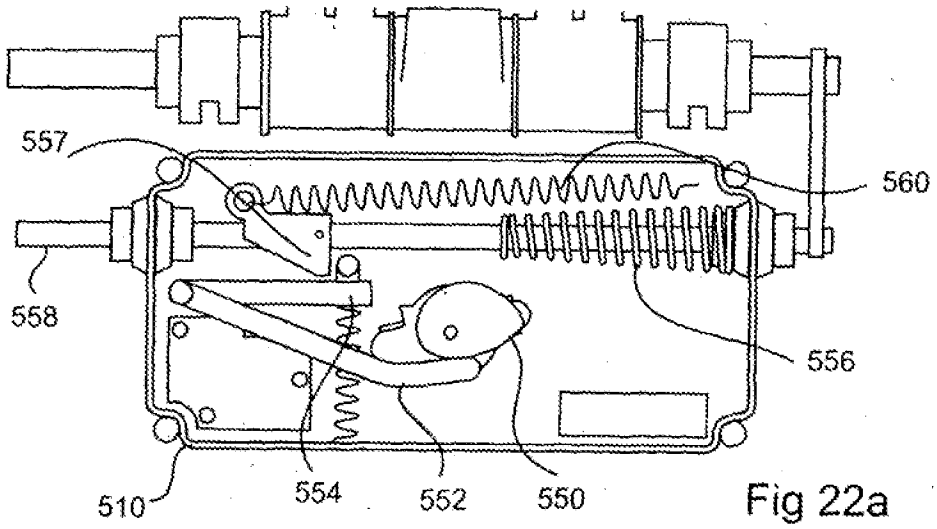

Fig 22a

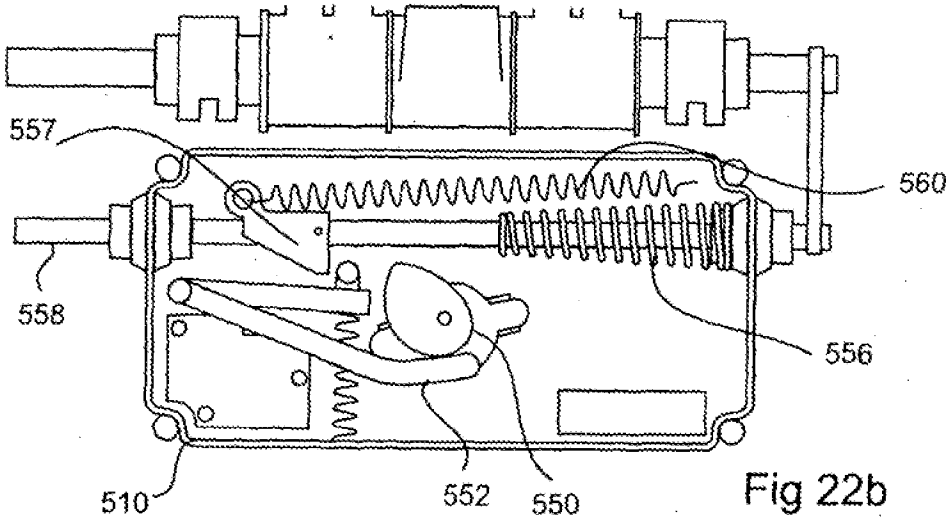

Fig 22b

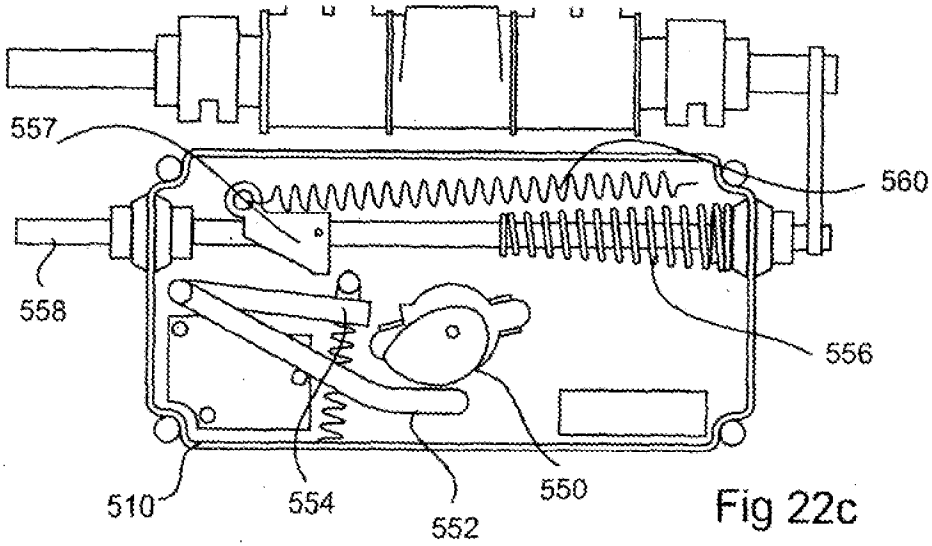

Fig 22c

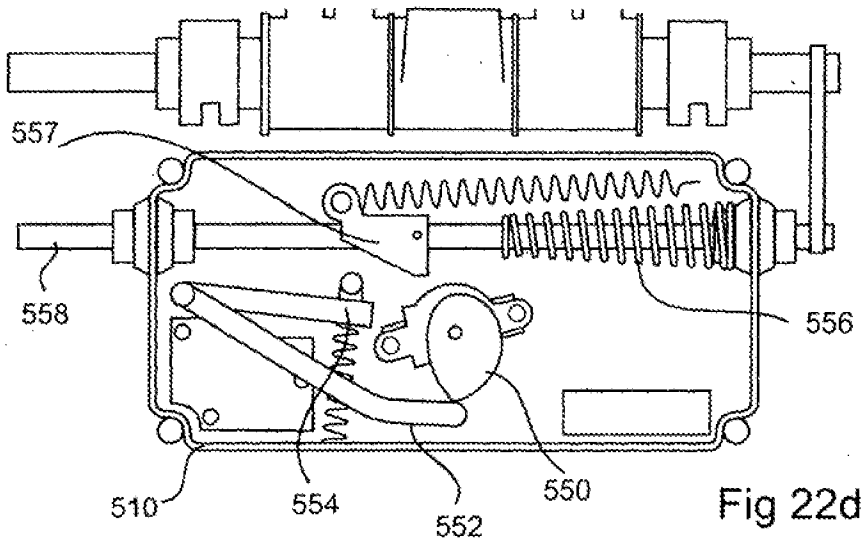

Fig 22d

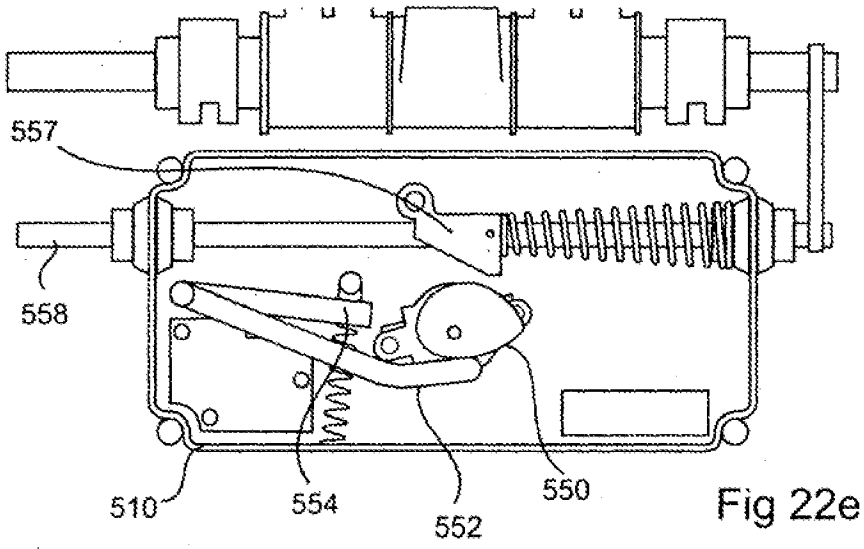

Fig 22e

INTERNATIONAL SEARCH REPORT

International application No.
PCT/AU2013/000179

A. CLASSIFICATION OF SUBJECT MATTER

E21B 25/16 (2006.01) E21B 47/02 (2006.01)

According to International Patent Classification (IPC) or to both national classification and IPC

B. FIELDS SEARCHED

Minimum documentation searched (classification system followed by classification symbols)

Documentation searched other than minimum documentation to the extent that such documents are included in the fields searched

Electronic data base consulted during the international search (name of data base and, where practicable, search terms used)

EPODOC & Derwent WPI: IPC & CPC E21B 25, E21B 47/02/low, E21B 47/09/low with keywords core, coring, vibration, oscillation, threshold, value, reference, level, nominated, set, pre-determined, sleep, wake, stand-by, below, above, larger, greater, smaller, etc; Google Patents Database with 'core' and 'orientation' with further keywords such as vibration, threshold, pre-determined, value, etc.

C. DOCUMENTS CONSIDERED TO BE RELEVANT

Category*	Citation of document, with indication, where appropriate, of the relevant passages	Relevant to claim No.
	Documents are listed in the continuation of Box C	

[X] Further documents are listed in the continuation of Box C [X] See patent family annex

* Special categories of cited documents:

"A" document defining the general state of the art which is not considered to be of particular relevance

"E" earlier application or patent but published on or after the international filing date

"L" document which may throw doubts on priority claim(s) or which is cited to establish the publication date of another citation or other special reason (as specified)

"O" document referring to an oral disclosure, use, exhibition or other means

"P" document published prior to the international filing date but later than the priority date claimed

"T" later document published after the international filing date or priority date and not in conflict with the application but cited to understand the principle or theory underlying the invention

"X" document of particular relevance; the claimed invention cannot be considered novel or cannot be considered to involve an inventive step when the document is taken alone

"Y" document of particular relevance; the claimed invention cannot be considered to involve an inventive step when the document is combined with one or more other such documents, such combination being obvious to a person skilled in the art

"&" document member of the same patent family

Date of the actual completion of the international search	Date of mailing of the international search report
13 June 2013	13 June 2013

Name and mailing address of the ISA/AU	**Authorised officer**
AUSTRALIAN PATENT OFFICE PO BOX 200, WODEN ACT 2606, AUSTRALIA Email address: pct@ipaustralia.gov.au Facsimile No.: +61 2 6283 7999	Jude Fernando AUSTRALIAN PATENT OFFICE (ISO 9001 Quality Certified Service) Telephone No. 0262832419

INTERNATIONAL SEARCH REPORT C (Continuation). DOCUMENTS CONSIDERED TO BE RELEVANT		International application No. **PCT7AU2013/000179**
Category*	Citation of document, with indication, where appropriate, of the relevant passages	Relevant to claim No.
X	AU 2008230012 A1 (RESERVOIR NOMINEES PTY LTD) 14 May 2009 Abstract, page 5 line 22 - page 7 line 25, page 8 line 1 - page 10 line 1; Figure 2	1-57

INTERNATIONAL SEARCH REPORT

International application No.
PCT/AU2013/000179

Box No. II Observations where certain claims were found unsearchable (Continuation of item 2 of first sheet)

This international search report has not been established in respect of certain claims under Article 17(2)(a) for the following reasons:

1. ☐ Claims Nos.:
   because they relate to subject matter not required to be searched by this Authority, namely:

2. ☒ Claims Nos.:
   because they relate to parts of the international application that do not comply with the prescribed requirements to such an extent that no meaningful international search can be carried out, specifically:

3. ☐ Claims Nos:
   because they are dependent claims and are not drafted in accordance with the second and third sentences of Rule 6.4(a)

Box No. III Observations where unity of invention is lacking (Continuation of item 3 of first sheet)

This International Searching Authority found multiple inventions in this international application, as follows:

See Supplemental Box for Details

1. ☐ As all required additional search fees were timely paid by the applicant, this international search report covers all searchable claims.
2. ☐ As all searchable claims could be searched without effort justifying additional fees, this Authority did not invite payment of additional fees.
3. ☐ As only some of the required additional search fees were timely paid by the applicant, this international search report covers only those claims for which fees were paid, specifically claims Nos.:

4. ☒ No required additional search fees were timely paid by the applicant. Consequently, this international search report is restricted to the invention first mentioned in the claims; it is covered by claims Nos.:
   1-57

Remark on Protest

☐ The additional search fees were accompanied by the applicant's protest and, where applicable, the payment of a protest fee.

☐ The additional search fees were accompanied by the applicant's protest but the applicable protest fee was not paid within the time limit specified in the invitation.

☐ No protest accompanied the payment of additional search fees.

Continuation of: Box III

This International Application does not comply with the requirements of unity of invention because it does not relate to one invention or to a group of inventions so linked as to form a single general inventive concept.

This Authority has found that there are different inventions based on the following features that separate the claims into distinct groups:

- Claims 1-57 are directed to a method and associated system of obtaining downhole survey data, and more particularly a method and associated system for obtaining downhole survey data that is core orientation data. The feature of determining that vibration from drilling is at or below a nominated (threshold) value and then recording survey data is specific to this group of claims.

- Claims 58-73 are directed to a core orientation marking system. The feature of an alignment means arranged to provide an indication of correct alignment of the device relative to a known alignment of the core and a marker device providing an identifiable mark on the end of the core corresponding to the known alignment of the core is specific to this group of claims.

PCT Rule 13.2, first sentence, states that unity of invention is only fulfilled when there is a technical relationship among the claimed inventions involving one or more of the same or corresponding special technical features. PCT Rule 13.2, second sentence, defines a special technical feature as a feature which makes a contribution over the prior art.

When there is no special technical feature common to all the claimed inventions there is no unity of invention.

In the above groups of claims, the identified features may have the potential to make a contribution over the prior art but are not common to all the claimed inventions and therefore cannot provide the required technical relationship. Therefore there is no special technical feature common to all the claimed inventions and the requirements for unity of invention are consequently not satisfied *apriori*.

INTERNATIONAL SEARCH REPORT Information on patent family members	International application No. **PCT/AU2013/000179**

This Annex lists known patent family members relating to the patent documents cited in the above-mentioned international search report. The Australian Patent Office is in no way liable for these particulars which are merely given for the purpose of information.

Patent Document/s Cited in Search Report		Patent Family Member/s	
Publication Number	**Publication Date**	**Publication Number**	**Publication Date**
AU 2008230012 A1	14 May 2009	AU 2008230012 A1	14 May 2009

End of Annex

Due to data integration issues this family listing may not include 10 digit Australian applications filed since May 2001.

(12) INTERNATIONAL APPLICATION PUBLISHED UNDER THE PATENT COOPERATION TREATY (PCT)

(19) World Intellectual Property Organization
International Bureau

(43) International Publication Date
25 September 2008 (25.09.2008)

PCT

(10) International Publication Number
WO 2008/113127 A1

(51) **International Patent Classification:**
E21B 25/16 (2006.01) *E21B 49/02* (2006.01)

(21) **International Application Number:**
PCT/AU2008/000395

(22) **International Filing Date:** 19 March 2008 (19.03.2008)

(25) **Filing Language:** English

(26) **Publication Language:** English

(30) **Priority Data:**
2007901412 19 March 2007 (19.03.2007) AU

(71) **Applicant** *(for all designated States except US):* **2iC AUSTRALIA PTY LTD** [AU/AU]; Unit 2/10 McElligott Court, Canning Vale, Western Australia 6155 (AU).

(72) **Inventors; and**
(75) **Inventors/Applicants** *(for US only):* **BEACH, Andrew** *[AW/AU]:* Level 2/10 McElligott Court, Canning Vale, Western Australia 6155 (AU). **BEACH, Shayne** [AU/AU]; Unit 2/10 McElligott Court, Canning Vale, Western Australia 6155 (AU). **MCLEOD, Gavin** [AU/AU]; Unit 2/10 McElligott Court, Canning Vale, Western Australia 6155 (AU).

(74) **Agent: GRIFFITH HACK;** Level 19, 109 St George's Terrace, Perth, WA 6000 (AU).

(81) **Designated States** *(unless otherwise indicated, for every kind of national protection available):* AE, AG, AL, AM, AO, AT, AU, AZ, BA, BB, BG, BH, **BR,** BW, BY, BZ, CA, CH, CN, CO, CR, CU, CZ, DE, DK, DM, DO, DZ, EC, EE, EG, ES, FI, GB, GD, GE, GH, GM, GT, HN, **HR,** HU, **ID,** IL, IN, IS, **JP,** KE, KG, KM, KN, KP, KR, KZ, LA, LC, LK, LR, LS, LT, LU, LY, MA, MD, ME, MG, MK, MN, MW, MX, MY, MZ, NA, NG, NI, NO, NZ, OM, PG, PH, PL, PT, RO, RS, RU, SC, SD, SE, SG, SK, SL, SM, SV, SY, TJ, TM, TN, TR, TT, TZ, UA, UG, US, UZ, VC, VN, ZA, ZM, ZW

(84) **Designated States** *(unless otherwise indicated, for every kind of regional protection available):* ARIPO (BW, GH, GM, KE, LS, MW, MZ, NA, SD, SL, SZ, TZ, UG, ZM, ZW), Eurasian (AM, AZ, BY, KG, KZ, MD, RU, TJ, TM), European (AT, BE, BG, CH, CY, CZ, DE, DK, EE, ES, FI, FR, GB, GR, HR, HU, IE, IS, IT, LT, LU, LV, MC, MT, NL, NO, PL, PT, RO, SE, SI, SK, TR), OAPI (BF, BJ, CF, CG, CI, CM, GA, GN, GQ, GW, ML, MR, NE, SN, TD, TG).

Published:
— *with international search report*

(54) **Title:** A CORE ORIENTATION TOOL

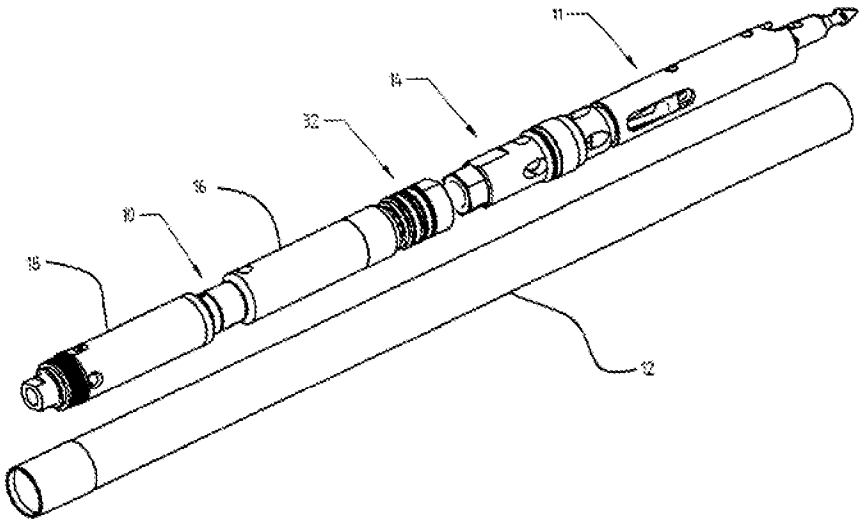

Figure 1

(57) **Abstract:** A core orientation tool (10) for providing an indication of orientation of a core sample (112) comprises an electronic orientation device (20), which upon receipt of a trigger signal, logs one or more indications of orientation of the tool (10). A trigger system (24) provides trigger signals to the electronic device (20) based one or both of (a) detecting one or more downhole events and (b) the effluxion of time. The downhole events relate to the action of core breaking and may include detecting: uphole motion of the tool; and, cessation of drilling and commencement of drilling.

WO 2008/113127 A1

A CORE ORIENTATION TOOL

Field of the Invention

The present invention relates to a core orientation tool that can provide directional characteristics of a geological core sample extracted from the subsurface.

Background of the Invention

Core sampling is used to allow geological surveying of the subsurface for various purposes including exploration and/or mine development. An analysis of the material within the core sample provides information of the composition of the subsurface. However in order to accurately interpret the information obtained from the core sample, it is necessary to have knowledge of the orientation of the core sample relative to the subsurface from which it was extracted.

Applicant has developed numerous devices, systems and methods for orientating a core sample including a method of orientating a core sample described in co-pending Australian patent application no. 2006901298; an orientation head described in International publication No. WO 07/109848; a core orientation system described in International publication No. WO 07/1137356; and an orientation device for a core sample described in International publication No. WO 03/038232; the contents of each of which is incorporated herein by way of reference .

The present invention is the result of Applicant's further research and development in the field of core orientation.

It is to be understood that, if any prior art publication is referred to herein, such reference does not constitute

an admission that the publication forms a part of the common general knowledge in the art, in Australia or any-other country.

In the claims of this application and in the description of the invention, except where the context requires otherwise due to express language or necessary-implication, the words "comprise" or variations such as "comprises" or "comprising" are used in an inclusive sense, i.e. to specify the presence of the stated features but not to preclude the presence or addition of further features in various embodiments of the invention.

Summary of the Invention

According to a first aspect of the present invention there is provided a core orientation tool for providing an indication of *in situ* orientation of a core sample extracted from a borehole by a core drill the tool comprising:

an electronic orientation system coupled with the core drill, the electronic orientation system configured, upon receiving a trigger signal, to log one or more first indications of orientation of the tool; and,
a trigger system that provides the trigger signal upon detecting one or more downhole events associated with operation of the core drill.

According to a second aspect of the present invention there is provided a core orientation tool for providing an indication of in situ orientation of a core sample extracted from a borehole by a core drill the tool comprising:

an electronic orientation system coupled with the core drill, the electronic orientation system configured, upon

receiving a trigger signal, to log one or more first indications of orientation of the tool; and,
a trigger system that provides the trigger signal upon one or both of (a) detecting one or more downhole events associated with operation of the core drill, and (b) effluxion of time.

According to a third aspect of the present invention there is provided a core orientation tool for providing an indication of *in situ* orientation of a core sample extracted from a borehole by a core drill the tool comprising :

an electronic orientation system coupled with the core drill, the electronic orientation system configured to log one or more first indications of orientation of the tool; and,
a trigger system that provides a trigger signal upon detecting one or more downhole events associated with operation of the core drill; and,
wherein tool is configured to associate the one or more first indications of orientation with the trigger signal.

The trigger signal may be one of a plurality of trigger signals. Moreover, the tool may be further configured to log different first indications of orientation, for example dip, roll and azimuth upon receipt of different trigger signals.

The one or more downhole events may comprise respective physical events arising from motion of the tool or the drill in the borehole.

For example, the motion may comprise one or a combination of:

(a) motion in an uphole direction;

(b) a change in motion from motion having a linear component in a downhole direction to motion having no linear component;

(c) a change in motion from motion in a downhole direction to motion in an uphole direction;

(d) a change in motion from no linear motion to motion in an uphole direction;

(e) a change in characteristics of vibration motion on the tool or drill arising from the cessation or commencement of drilling;

(f) a change in speed of linear motion of the tool; and,

(g) a change in the rate or direction of rotation around the tool's longitudinal, lateral or normal axis.

(h) any change in velocity (speed and/or direction of movement) .

The trigger signal may be provided upon detecting a predetermined sequence of downhole events such as a cessation of drilling followed by motion of the tool in an uphole direction.

The sequence of events may further comprise commencement of drilling prior to the cessation of drilling.

Other downhole events that may be detected by the electronic orientation device and used in producing the trigger signal comprise:

(a) detecting contact of a backend assembly to which the tool is coupled hitting a landing ring in the core drill;

(b) the backend assembly hitting a water table in the event that the drill is operated in the borehole below the water table;

(c) detecting release of the backend assembly from a wire line when initially inserting a core tube into the core drill;

(d) the core drill tagging a toe of the hole;

(e) an overshot hitting and latching onto the backend assembly;

(f) retrieval of the backend assembly from the drill hole; and,

(g) a change in the flow of fluid through or around the backend assembly.

Instead of utilising detected changes in vibration characteristics of the tool which are caused when the drill is cutting a core, the stopping and starting of drilling may be detected by sensing actual rotation of the core drill by using sensors or devices mounted on or adjacent to a rotating side of the backend assembly. Such devices may comprise an inductive RPM sensor, accelerometer or a gyroscope .

The tool 10 may be further configured to log or record time between one or more of the downhole events, for example the time between cessation of drill and motion in an uphole direction; and/or time between cessation of drilling and the provision of the trigger signal. Such information may be beneficial in accessing the accuracy or degree of confidence in the orientation readings.

According to a further aspect of the present invention there is provided a core retrieval system for a core drill comprising:

a core tube having an uphole end and a downhole end, the downhole end provided with an opening for receiving a core sample cut by the core drill; and,

a core orientation tool in accordance with the first aspect of the present invention wherein the core orientation tool is coupled to the core tube at a location uphole of the downhole end of the core tube.

The core retrieval system may further comprise a backend assembly coupled to the uphole end of the core tube and wherein the core orientation tool is attached to the backend assembly uphole of the uphole end of the core tube.

A further aspect of the present invention provides a method of logging *in situ* orientation of a core sample extracted from the ground by a core drill comprising:

coupling an electronic core orientation device in a known spatial relationship to a core sample cut by the core drill;

configuring the electronic core orientation device to log one or more indications of orientation of the device upon receipt of a trigger signal; and,

providing the trigger signal upon detecting one or more downhole events associated with the operation of the core drill.

The downhole events may be indicative of a, or an imminent, core break.

Detecting of the one or more downhole events may comprise detecting an uphole motion of the device.

The detecting of the downhole event may comprise detecting a cessation of drilling prior to detecting the uphole motion of the device. The detecting may further comprise detecting commencement of drilling prior to detecting cessation of drilling. Further, the detecting may comprise detecting a cessation of downhole movement of the device prior to detecting the commencement of drilling.

In one embodiment the tool comprises a switch that is activated by the tool, a downhole device such as an inner barrel assembly to which the tool is attached, or the drill, tagging the toe of the borehole. The switch may comprise a Hall effect switch, an optical switch, a pressure switch, and a mechanically operated electrical switch.

The first indications of orientation may comprise one or a combination of borehole dip, borehole azimuth, core orientation, core dip and core azimuth.

According to a further aspect of the present invention there is provided a core retrieval system for a core drill comprising:

an inner core tube having an uphole end and an opposite downhole end provided with an opening for receiving a core cut by the core drill; and,

a core orientation tool coupled to the inner core barrel and movable inside the inner core tube in an uphole direction by abutment with the core, the core orientation tool comprising an electronic orientation device which upon receiving a trigger signal logs one or more first indications of orientation of the tool;

a trigger system that provides the trigger signal to the electronic orientation device; and

a core face orientation device which records rotational orientation of a core sample, wherein the electronic orientation device is in a known rotational position relative to the core face orientation device.

According to another aspect of the present invention there is provided a core retrieval system for a core drill comprising:

a core tube having an uphole end and an opposite downhole end provided with an opening for receiving a core sample cut by the core drill;

a core orientation tool coupled to the inner core tube and movable inside the inner core barrel in an uphole direction by abutment with the core sample, the core orientation tool comprising: an electronic orientation device which, upon receiving a trigger signal logs one or more first indications of orientation of the tool; and a trigger system that provides the trigger signal to the electronic orientation device.

A further aspect of the present invention provides a core orientation apparatus for providing an indication of orientation of a core sample extracted from a borehole by a core drill the apparatus comprising:

an electronic orientation device which upon receiving a trigger signal logs one or more first indications of orientation of the tool;

a trigger system that provides the trigger signal to the electronic orientation device; and

one or more secondary orientation devices which provide one or more second indications of orientation of the core or borehole, wherein the electronic orientation device is in a known rotational position relative to the one or more secondary orientation devices.

The trigger system may provide the trigger signal on the basis of effluxion of time from a reference time. For example the reference time could be the time the tool is inserted into a core drill, or at a time when or after the core face orientation device records the orientation of the core face.

In an alternate embodiment, the trigger signal is delivered on multiple occasions during a period between the core orientation tool being inserted into the core drill and a time after the core face orientation device records the orientation of the core face.

In one embodiment, the trigger system provides the trigger signal to the electronic orientation device upon detecting one or more downhole events associated with the operation of the drill. The one or more downhole events may comprise one or more physical events arising from the motion of the tool in the borehole.

Brief Description of the Drawings

Embodiments of the present invention will now be described by way of example only with reference to the accompanying drawings in which:

Figure 1 is a schematic representation of an inner barrel assembly and core tube to which an embodiment of a core orientation tool is coupled;

Figure 2 is a cutaway view of the core orientation tool and adjacent parts of the inner barrel assembly to which it is coupled.

Figure 3 is a partially exploded schematic representation of a further embodiment of a core orientation tool in accordance with the present invention;

Figure 4 is a partially exploded representation of a third embodiment of the core orientation tool;

Figure 5 is a section view of the core orientation tool shown in Figure 4; and

Figure 6 depicts the use of a template for transferring indications of core orientation captured by the tool to a core.

Detailed Description of the Preferred Embodiment

Throughout this specification the term "orientation" is intended to mean one or more of "dip", "roll", and "azimuth" of an apparatus, tool, core sample, borehole, or other structure in relation to which orientation data is required or desired.

Further, the expression "electronic orientation device" is intended to denote an electronic device or system that utilises electronic sensors and transducers such as but not limited to accelerometers, inclinometers, gyroscopes and magnetometers.

Throughout this specification the expression "downhole direction" is intended, unless the context clearly suggests otherwise, a direction that increases distance along the hole away from a collar of the hole. Thus for example in a hole drilled directly downwards in the ground the downhole direction is the same as the direction of gravitational acceleration. Whereas in an uphole such as one drilled in a back of a tunnel, the downhole direction is in a direction opposite to the direction of gravitational acceleration.

Throughout this specification the expression "uphole direction" is intended, unless the context clearly

suggests otherwise, a direction that decreases distance along the hole away from the collar of the hole. Thus for example in a hole drilled directly downwards in the ground the uphole direction is opposite the direction of gravitational acceleration. Whereas in an uphole such as one drilled in a back of a tunnel, the uphole direction is the same as the direction of gravitational acceleration.

Figures 1 and 2 illustrate an embodiment of a core orientation tool 10 in accordance with the present invention. The core orientation tool 10 is shown in association with an inner barrel assembly 11 which comprises a core tube 12 for receiving a core being cut by a core drill, and a backend assembly 14 that is attached to the core tube 12 for lowering and retrieving the core tube 12 from the core drill . The core tube 12 is of conventional construction while the backend assembly 14 is modified by the inclusion of an adaptor 16. The tool 10 is coupled at one end to the conventional core tube cap 18 of the backend assembly 14 with the adaptor 16 being used to couple an opposite end of the tool 10 to the remainder of the backend assembly 14. The tool 10 is in a known or measurable spatial relationship with the core tube 12 . Further, as the core sample is rotationally fixed inside the core tube 12, at least shortly before and during a core breaking action, the orientation data relating to the core tube 12 can be related to the *in situ* orientation of the core sample .

The tool 10 comprises an electronic core orientation device or system 20 housed within a body 22 that is coupled to and between the core tube cap 18 and the adaptor 16. The electronic core orientation device 20 is configured to log one or more first indications of orientation of the tool (ie, core orientation) upon receiving of a trigger signal. To this end, the tool 10 includes a trigger system 24 that provides the trigger

signal upon detecting one or more downhole events associated with the operation of the core drill. These events may particularly relate to the core breaking function of the core drill and/or various sequences of events expected prior to core breakage.

The system 20 comprises multiple sensors and transducers for sensing various events and orientation data of the tool 10 and core drill. The sensors may comprise for example accelerometers, gyroscopes, physical switches, magnetometers, vibration sensors, inclinometers, inductive RPM sensors, flow sensors and pressure sensors. Some of the sensors and transducers send information to the trigger system that analyses the information to determine when to provide the trigger signal . Other sensors and transducers, notionally forming an orientation module 26, may be either in an idle state or continually providing data indicative of core and/or bore hole orientation, however these sensors and transducers are not activated and/or the orientation data is not logged until the trigger system 24 provides the trigger signal. It will be appreciated by those skilled in the art that some of the sensors and transducers that are used by the trigger system may also provide orientation data. The orientation system 20 may further comprise a transceiver 28 coupled to an antenna 30 to communicate with a hand-held computer or other like device. The function of this will be explained in greater detail later in the specification.

Embodiments of the tool 10 are able to log *in situ* orientation data relating to the core and the borehole from which the core is extracted at a time shortly before or at core breakage. This is done by arranging a trigger system 24 to issue the trigger signal upon sensing particular events or sequences of events that are expected to occur when a core is broken from the ground. One or more of the downhole events relate to physical events

arising from the motion of the tool 10 and indeed the core drill in the borehole. One of the telltale physical events of a core break is an uphole motion of the core drill and thus the tool 10. Accordingly the trigger system 24 may be configured to issue the trigger signal when sensors in the module 26 detect an uphole movement or acceleration or a change in direction of motion from a downhole direction to an uphole direction. While such motion is characteristic of a core break, other events or motions may also be sensed which increase the degree of confidence that the uphole motion is related to a core break. Examples of such events or motions include:

1. The backend assembly 14 being released at the collar of the borehole.

2. When the toe of the hole is below the water table, detecting the backend assembly 14 hitting the water table.

3. The backend assembly 14 contacting or hitting a landing ring within the core drill.

4. The commencement of drilling.

5. The cessation of drilling.

6. The breaking of the core itself.

7. An overshot hitting and latching onto the backend assembly 14.

For example, in addition to simply detecting an uphole motion of the tool 10 or the core tube 12 or core drill itself, the trigger system 24 may be arranged to issue the trigger signal upon the module detecting in sequence commencement of drilling, cessation of drilling and a

motion in an uphole direction. The sensing of the commencement and cessation of drilling may be via the use of vibration sensors in the module 26. It is known that during drilling as a core bit is bearing against rock, vibrations of known characteristics will be generated.

The trigger signal may be one of a plurality of trigger signals provided upon detection of different downhole events. That is a trigger signal may be provided when commencement of drill is detected, another when cessation of drilling is detected and another when an uphole motion of the tool 10 or drill is detected. Thus logging (recording) of data will commence prior to the breaking of the core. Additionally different orientation indications may be logged at different trigger signals. For example dip may be logged at when the trigger system detects drilling has stopped (e.g. detecting no rotation of the core drill following previously detecting the commencement of drilling; and core orientation may be logged upon the trigger system detecting a core lifter case gripping the core just prior to the core break.

The tool 10 and more particularly the electronic orientation system 20 comprises a memory device for storing logged data. The trigger signal may be considered to act as a pointer to identify the logged orientation data at the time the trigger signal(s) where provided so that the orientation data can be correlated to particular downhole event, particularly the core break.

Accordingly sensing a change in the characteristics of the vibrations would be indicative of the commencement and cessation of drilling. However this is not the only way in which the commencement and cessation of drilling may be sensed. As an alternate, sensors may be provided in the module 26 or trigger system 24 to sense the speed, direction or change in speed or direction of rotation of

the core drill. For example upon commencement of drilling, the sensor will detect rotation of the core drill, while on cessation of drilling the sensor will subsequently detect a change in the speed of rotation and more particularly a zero speed of rotation. Such a sensor may comprise an inductive RPM sensor, accelerometer or gyroscope having a component on or adjacent a rotating section of the backend assembly 14, such as for example on an uphole side of bearing 32 of the backend assembly.

Other possible variations for detecting the commencement and cessation of drilling include by detecting flow of fluid through or around the backend assembly 14. In this regard, fluid is pumped through or around the core drill and backend assembly during drilling with the flow being cut off when drilling ceases. Therefore detecting a change in the flow of water will also be indicative of the cessation of drilling. Also while uphole motion may typically be sensed by an accelerometer, other types of sensors including optical sensors or lasers may be used for sensing motion in an uphole direction.

A substantive benefit of the tool 10 over other core orientation devices that rely on the logging of time to correlate orientation data to a core is that the tool 10 does not require the use of timers by human operators and is therefore less susceptible to error. The above described embodiment of the tool 10 may be considered as a "drop and forget" sensor which will automatically log core orientation data shortly before or at the time of a core break.

The tool 10 may be further configured to provide borehole azimuth and vertical core orientation relative to azimuth. It is known to use gyroscopes to obtain azimuth information when logging boreholes. However gyroscope technology is not suitable for use in downhole core

orientation during the drilling process. The reasons for this include that the gyroscopes are prone to drift when operated for extended periods as would be required when lowering the gyroscope through the core drill; the inability for the gyroscope to maintain accurate orientation when exposed to sudden movements such as a shunt or vibration as typically would occur when dropping a backend assembly down a drill string; and, the need for the azimuth measurement to be made relative to a known reference point.

Notwithstanding the above limitations, an embodiment of the tool 10 may comprise a gyroscope 34 or similar device for logging azimuth and dip. This is enabled by the use of the trigger system 24 which will only trigger the gyroscope 34 to move from an off or idle state to a logging state at the same time as it supplies a trigger signal to the measurement module 26. Prior to the trigger system 24 providing the trigger signal, the gyroscope 34 is either off or in an idle state. Upon receipt of the trigger signal, the gyroscope 34 is activated to commence tracking changes in orientation.

As the inner barrel assembly 11 is being withdrawn from the core drill, the gyroscope 34 continues to tracking changes in orientation. Orientation of a collar of the borehole may be used as a known reference orientation. Thus changes in orientation since the issuance of the trigger signal can be related back to the collar orientation so as to enable determination of the azimuth of the tool 10 and the borehole at the toe of the hole substantially at the time of a core break. This in effect provides a single survey shot at the bottom of the hole. This data may be used to build an ongoing survey of the borehole for determining its path when combined with a measurement or estimate of the hole depth. This may be

determined by simply counting the number of rods in the core drill at each core run.

As the gyroscope 34 will only need to track changes in the orientation of the tool 10 after drilling has stopped, the need to track changes during the descent of the tool down the hole and during drilling is avoided. This substantially reduces the running time of the gyroscope therefore reducing the drift that may occur. It also obviates the need for the gyroscope to track changes in high vibration periods during drilling thus avoiding a significant loss of accuracy.

In the above embodiment, the tool 10 is used as a stand alone tool to obtain orientation data. In order to extract the data and relate the data to a core sample held within the core tube 12, the tool 10 may be used in conjunction with a core orientation system of the type described in Applicant's International application No. WO 2007/137356. In brief, the core orientation system in the aboveref erenced publication comprises a combination of:

an electronic orientation device which may have some features common to the current device 10;

a core position indicator adapted for engagement with the core tube 12 when on the ground; and,

a remote unit such as a hand-held computer that communicates between the tool 10 and the core position indicator.

In short, the transceiver 28 in the tool 10 communicates via wireless communication with the hand-held computer which in turn transfers data to the core position indicator. More particularly, the tool 10 logs orientation data of a reference point on the core tube 12

relative to a first datum at the time the particular downhole event has occurred, ie, at or shortly before a core break. The reference point on the core tube need not be a physical marking. Once the core tube 12 is retrieved and placed in a stable position say on a core tray, the tool 10 is again operated to log orientation data of the same reference point on the core tube to a second datum. A rotational displacement σ from the first datum to the second datum is calculated by the hand-held computer and wirelessly communicated to the core position indicator. The core position indicator is then rotated about the core tube 12. When the core position indicator is moved to a position where it is rotated by the appropriate rotational displacement σ from the second datum, it emits a signal to indicate the position of the first datum.

The core position indicator also includes a guide in the form of a slat having an elongated slot for receiving a scribing or marking device such as a pencil. The forward most end of the slat extends over the front of a core lifter case 36 and a portion of the core extending from the core lifter case. The marker is then used to mark the core lifter case and/or core to signify the location of the core relative to the particular datum.

The core position indicator may be modified over and above that described in the above referenced application by the inclusion of a sensor to sense when a marker has been run along the slot to signify that a marking has been made on the core lifter case and/or core. The core position indicator and the hand-held computer can record how accurately an operator marks the core by comparing its position when marked to its required position. This accuracy of marking information can then be transferred back to the hand-held computer and integrated with the original orientation information. The information contained in the hand-held computer is transferable to a

removal medium so that all the information can be provided to the recipient of the core.

Alternately, the core position indicator may be arranged so as to prevent a user from marking the core until the core position indicator is correctly orientated. This may be achieved for example by having a moveable gate that slides across the slot to block the slot when the core position orientator is not in the correct orientation.

In one variation the trigger system may be modified to provide trigger signals on based on one or both of (a) one or more downhole events, and (b) effluxion of time.

The time triggers may comprise one or a combination of:

(a) a single trigger at a specified delay time relative to a time the device was initialized by an operator or triggered by a physical event;

(b) multiple continuous triggers at preset intervals commencing at a specified delay time relative to a time the device was initialized by an operator or triggered by a physical event and from which one or more data sets are selected.

The trigger system 24 may trigger the sensors in the module 26 to record one, or a combination of readings of orientation at a point/points in time:

(a) exactly when the trigger occurs;

(b) after some time delay;

(c) prior to the trigger by selecting a pre recorded reading where multiple readings are taken at predetermined intervals .

The trigger system 24 may cyclically provide trigger signals for a prescribe period of time after the first trigger is provided. For example trigger signals may be

provided every 10 seconds for a two minute period. Alternately, the electronic orientation device 20 may be arranged so that upon receiving a trigger signal, it logs the one or more first directional characteristics cyclically for a prescribed period of time, for example every 10 seconds for a 2 minute period.

Figures 3-6 illustrate various core orientation apparatuses 100 which comprise a combination of the core orientation tool 10 together with one or more secondary orientation devices. As described in greater detail below, one of the secondary orientation devices may be a core face orientation device which records the *in situ* orientation of the face of the core. Another secondary orientation device that may be incorporated into the apparatuses 100 is a bottom orientator which records the location of a zero gravity vector at the toe of the hole provided that the hole is inclined to the vertical. The secondary orientation devices may be mechanical or electronic.

In the embodiment of the apparatus 100 shown in Figure 3, the trigger system 26 is depicted as being contained in the common housing 22 with the remainder of the electronic system 20. However this need not be the case and the trigger system 26 may be physically separate from the tool 100 but in communication remainder of the electronic system 20 (for example by radio communication) to allow delivery of the trigger signals.

The trigger system 24 may provide trigger signals based on the same downhole events described in relation to the first embodiment.

This embodiment of the apparatus 100 comprises: a secondary orientation device which provides core face orientation and is in the form of a profile device 120;

and, body 122 having a downhole end 124 and an uphole end 126. The body 122 comprises a lock body 127, a latch body 128 and an anchor 130, which are described in detail hereinafter with reference to the embodiment shown in Figures 5 and 6. In the embodiment of Figure 3, the electronic orientation device 20 is located downhole of the body 122.

The device 120 may take the form of the face orientator as described in Applicant's above referenced International publication No. WO 07/109848. The device 120 comprises a substantially cylindrical body 132 having a plurality of internal axially extending holes 134 for seating respective pins 136. The pins 136 are held within the holes 134 with a degree of resilience so that if an axial force is placed on the pins 136 in the uphole direction, the pins 136 can slide within the body 132, but when the force is removed, the pins 136 maintain their relative position in their holes 134. The body 132 is also provided with a bearing scale 138 marked on its outer circumferential surface 140. The scale provides markings in five degree increments from 0° to 360°. The 0° mark is aligned with a positional reference mark 142 provided at a downhole end of a shaft 144 that extends into the electronic orientation device 20.

The mark 142 also provides a zero reference for the electronic orientation device 20 so that by coupling of the device 120 to the electronic device 20 both are keyed to the same zero reference.
The face orientator 120 provides a profile recording of a toe of the hole from which a core 112 is cut. It will be understood by those skilled in the art that the toe of the hole becomes an uphole face of the core 112. Typically the device 120 is constructed as a single use device that, upon extraction of the core, is removed from the apparatus 100 and is stored with the core 112. Prior to this

occurring, the scale 138 is marked with an angle denoting the orientation of the core relative to the zero degree mark on the scale 138. This marking may be obtained by transferring data from the electronic device 20 to the device 120 by an intervening hand held telemetry device (hand held computer) that interrogates the device 20 to obtain for example the tool face orientation data at the time the trigger signal is provided by the triggering system 26. This will provide for example a bearing in degrees referenced to the reference mark 142 . This bearing can then be physically marked on the scale 138. For example if the tool face orientation was 35° relative to the marking 142, then an indelible mark can then be made on the 35° position on the scale 138.

Figure 4 illustrates a further embodiment of the apparatus 100. In this figure the features which are identical to those described with reference to Figure 3 are denoted by the same reference numbers. The substantive difference between the apparatus 100 shown in Figure 4 and that shown in Figure 3 is that the tool 10 in Figure 4 is located at the uphole end 126 of the body 122 and, an additional secondary orientation device in the form of a mechanical bottom orientator 146 is coupled between the downhole end 124 of the body 122 and the core face profile device 120. The bottom orientator 146 is provided with three balls 148a, 148b and 148c (hereinafter referred to in general as "balls 148") disposed within respective races 150a, 150b, and 150c (hereinafter referred to in general as "races 150"). Prior to the bottom orientator 146 being activated the balls 148 are free to roll within their respective races 150. Accordingly, by action of gravity, provided that the apparatus 100 is disposed in a borehole that is not absolutely vertical, the balls 148 will roll to the lowest point within their respective races. When the bottom orientator 146 is activated, the width of the races 150 is reduced so that the balls 148 are clamped in their

races. This prevents any further rolling of the balls and thus maintains the indication of the bottom of the hole.

The bottom orientator 146 is operated by the apparatus 100, and in particular the core face profile device 120, tagging the bottom of the borehole. The operation of the bottom orientator 146, the latch body 128 and the anchor 130 are described in detail in Applicant's above referenced applications WO 03/038232 and WO 2005/078232. Nevertheless a brief description of the operation of these components is provided below with particular reference to Figures 4 and 5.

A shaft 152, which is provided with the key mark 142, extends axially through the races 150 and up into the lock housing 127 and latch body 128. The device 120 is coupled to a downhole end of the shaft 152. The lock housing 127 includes a tubular extension 156 which has seats 157 on its outer surface for respective latches 158 that are pivotally coupled to the latch body 128 and can extend through windows 160 formed in the latch body 128. A shroud 159 is attached to a downhole end of the lock housing 127 and covers the bottom orientator 146. A recess 161 is also formed in the lock housing 127 between the seats 157 and the shroud 159. A pretensioned spring 162 is disposed about an upper end of the shaft 152 within the extension 156 and biases the shaft to in an uphole direction. A further spring 164 is held in a cavity between the latch body 128 and the extension 156 and acts to bias the extension 156 and thus the lock housing 127 in a downhole direction.

Another spring 166 acts between the latch body 128 and an anchor sleeve 168 of the anchor 130 biasing the sleeve 168 toward a shoulder 170 formed about an anchor body 172 of the anchor 130. A plurality of anchor balls 174 are retained within the anchor sleeve 168. The anchor balls

174 roll along an outer surface 176 of the anchor body 172 . When the anchor sleeve 168 is butted against the shoulder 170 by the spring 166, the balls 174 extend radially beyond the anchor sleeve 168. In this position, the anchor balls 168 are held on a constant outer diameter portion 178 of the anchor body 172 .

Moving in a downhole direction from the portion 176 the outer circumference of the outer body 172 is formed with a tapered portion 180 that leads to a circumferential recess 182. The anchor body 172 also has, at its down downhole end, a portion 184 of a first constant inner diameter, then a contiguous tapered portion 186 that has an increasing inner diameter, and which then leads to a further portion 188 having a constant inner diameter greater than the inner diameter of the portion 184 .

A trigger seat 190 is attached to a uphole end of the shaft 152 and a plurality of trigger balls 192 are each seated partially in a circumferential groove 194 formed in the trigger seat 190 and in holes 196 formed in an uphole end of the extension 156.

The apparatus 100 is loaded into a downhole end of a core tube 12 by first inserting the end provided with the tool 10. Eventually the latch dogs 158 abut a downhole end of the core tube 12 preventing further insertion of a tool 100. During the insertion, the anchor body 168 slides axially away from the shoulder 170 so that the anchor balls 174 roll along the tapered portion 180 and thus move radially inward. Once insertion of the apparatus 100 has been ceased by abutment of the latches 158 with the downhole end of the core tube, the spring 166 pushes the sleeve 168 in a uphole direction causing the anchor balls 174 to commence to ride up the tapered length 180 to a position where they extend radially outward from the sleeve 168 to an extent where they bear against an inner

surface of the core tube 12. This effectively locks the apparatus 100 to the core tube 12 preventing it from falling out. The core tube 12 is then lowered into a core drill 193 via a conventional backend and wire line or other insertion method, with the core drill being suspended above the toe of the borehole. With the core tube correctly seated within the core drill, the core face profile device 120 extends from the shroud 159 and a drill bit 195 coupled to a downhole end of the core drill 193. During this time, the orientation balls 148 are free to roll within their races 150.

The core drill is then lowered onto the toe of the hole resulting in the pins 136 sliding axially within the cylindrical body 132 to provide a profile of the toe of the hole.

As the core drill is further lowered, prior to the commencement of drilling, an end of the shroud 59 will eventually be brought into contact with the toe of the hole. Now, further lowering of the core drill results in the extension 156 sliding axially inward relative to the latch body 128 in a uphole direction compressing the spring 164. Eventually, the trigger balls 192 will roll outwardly along the tapered portion 186 to the portion 188 of the anchor body 172. When this occurs, the trigger balls 192 are able to move outwards in a radial direction and disengage from the groove 194 in the trigger seat 190. This releases the spring 162 allowing it to push the trigger seat 190 and thus the shaft 152 in an uphole direction relative to the extension 156. This results in a clamping of the orientation balls 148 within their races 150.

Continued lowering of the core drill onto the toe of the hole results in the seats 157 sliding from under the latches 158 so that the recess 161 underlies the latches

58. The latches 158 are now free to rotate inwardly thereby disengaging the apparatus 100 from the downhole end of the core tube 12.

The axial motion of the shaft 152 may be used to activate a switch such as, but not limited to, a microswitch, a Hall Effect switch, an optical switch or a pressure switch, which may be considered as forming part of the trigger system, to provide a trigger signal for the electronic orientation device 20. The electronic orientation device 20 can then log data relating to the orientation of a tool 10, the borehole in which it resides, and/or the core 112. The logging of information by the electronic device 20 may occur at a predetermined frequency for a predetermined period of time. For example the electronic orientation device/system 20 may log orientation data every 10 seconds for a two minute period after receipt of the initial trigger signal.

The electronic orientation device 20 may be arranged so that the logging of indications of orientation occur only when trigger signals are received from both motion of shaft 152 and at least one other sensor or transducer of the trigger system 24.

The indication of orientation provided by the core face profile device 120 and bottom orientator 146 can be transferred to the core 112 in a manner described in Applicant's above referenced Australian patent application no. 2006901550 using template 198 as depicted in Figure 7. Template 198 comprises a pair of parallel lines 200 for location on opposites sides of the orientation balls 148, and a pointer line 202 that extends parallel with an centrally between the tram lines 200. An elongated slot 204 is cut in the template 198 and has one edge 206 in alignment with the pointer line 202. The slot 204 extends over the scale 138 on the body 132 as well as over a

portion of the core sample 112. An operator can use a marker such as a pen or pencil to draw line segments 208a along the edge 206 from the body 132 across the scale 138 and 208b along the core 112. Indication of orientation logged by the electronic orientation device 20 may be obtained and marked on the core 112 in the same manner as described in Applicant's above referenced Australian application no. 2006902873.

The provision of both the tool 10 and the mechanical orientation device 146, as depicted in Fig. 4, also enables auditing of the apparatus 100 to provide a degree of confidence in the orientation data obtained therefrom. This arises because embodiments where there is both the electronic orientation device 20 and one or more mechanical orientation devices 146, a comparison can be made between the same indications of orientation obtained from each of the devices. For example if bottom of hole indications provided by the separate devices are within a acceptable tolerance range (e.g. up to 5°) a high degree of confidence is provided that each of the devices 20 and 146 is providing reliable indications of orientation. However, if the devices give indications that differ more than an acceptable range, potential errors can be flagged on site to enable corrective action.

The combination of the core tube 12 and the core orientation tool 10 forming the apparatuses shown in Figures 3-6 comprise what is believed to be a unique core retrieval system in that the electronic orientation device 20 is, at least at the time of deployment, located at a downhole or front end of the core tube 12. More particularly, as will be appreciated from the above description, the apparatus 100 being at the front or down hole end of the core tube 12 is physically close to the core sample 112 at the time, or one of the times, at which the electronic orientation device 14 logs orientation data

of the tool 100. It is believed that this may give rise to higher accuracy in the orientation data recorded than other systems in which electronic orientation devices are located at a backend of the inner core tube, i.e. between an uphole end of the inner core tube and an overshot . In this regard, inner core tubes typically come in lengths of three or six metres.

It is envisaged that various embodiments of the tool 10 may perform self checks and provide users with information regarding the status of the tool 10. Status messages may include one or a combination of low battery power, communications error, system faults. The tool 10 may also collect and process data so as to provide users with a measure of the accuracy and reliability of the recorded orientation data. The data collected by the tool 10 to provide orientation information may be analysed using statistical measures of its accuracy. Log data may be analysed to identify the presence of any movement during the logging of orientation data. The direction of motion may also be determined and provided to a user. These self checks may be beneficial to identify surface requirements. In particular the indication of movement during logging may be beneficial in identifying improper operation of the tool 10 and thus flag the need for training or retraining of operators .

For example one can analyze data from the sensors to determine whether the core drill was rotating and/ subject to excessive vibration at the time of a core break. Such events, particularly the rotation, will decrease the reliability of the orientation data. The tool 10 would typically comprise three accelerometers to provide acceleration data about the X, Y and Z axes respectively. Rotation of the core drill at the time of the core break would be indicated by readings from these accelerometers.

More particularly the tool 10 may provide the operator with information regarding the proper operation of its components parts and systems. If a component or system fails the tool 10 could report the failure to the operator via the handheld control unit. If the failure occurs or is detected while the tool 10 is down a bore hole it can be reported to the operator via the handheld control unit ounce the tool has been recovered to the surface.

Further to the above operation the tool 10 could also be capable of performing a complete self check that verifies the correct operation of the entire system. This self diagnostics could be run on demand by an operator or automatically when the operator is preparing the tool for a core run (being run down a bore-hole to perform its function) . In this way a faulty tool would not be used for a core run and result in a failed orientation.

The tool 10 may also be able to provide information to the operator regarding the certainty of a provided orientation measure. The certainty of a orientation measure can be determined by analysing the tools sensor input before during and after the orientation measure is made. When analysed the sensor data may reveal that there was an unwanted environmental condition present when the orientation measure was made. The unwanted environmental condition could be motion in the form of a linear movement, rotation or vibration. It could also be some other environmental condition such as a high or low temperature. The results of the analyses could be reported to the operator in one or a combination of the following ways:

1. By providing an indication of the source of unwanted environmental condition.

2. By associating the unwanted environmental condition to a known down-hole event that should not have occurred and providing the event to the operator.

3. By providing a calculated measure of the orientations certainty from the analysed sensor data. For example a scale of 1 to 5 could be employed where 1 is a certain orientation and 5 is a very uncertain orientation (failed). The certainty of orientations could then be provided using this scale.

The information provided by the tool in the above ways will be useful in identifying procedural errors made by the operators of the tool. For example if the core drill was spinning when the orientation was measured the tool 10 would report that the orientation is uncertain because rotation was detected during the orientation. It could also report that the likely cause of the rotation was that the core drill was spinning. In future the operator will know to ensure that the core drill is not spinning when the orientation is being measured. Similarly if the core drill was being raised or lowered when the orientation was measured the tool 10 could provide a relevant report to the operator.

By providing feedback regarding device faults and the certainty of the orientations when something goes wrong the operator will be fully informed as to the cause. Thus operator error can be discerned from tool failure/error. These reports can also be made available to supervisors or managers via the hand held control device or when the data is exported to an external memory device or laptop to assist them in maintaining equipment or attending to training issues.

Now that various embodiments of the present invention have been described in detail it will be apparent to those skilled in the relevant arts that numerous modifications and variations may be made without departing from the basic inventive concepts. For example, a mechanical orientation device 146 is described which utilises three orientation balls 148. However in an alternate variation,

this orientation device may comprise only a single orientation ball. In addition or alternately, the mechanical orientation device may include a washer that is indented with a mark representative of the location of the bottom of the hole such as described in Applicant's international publication no. WO 03/038232. Embodiments of the invention may also include in addition or as an alternate to the mechanical orientator 146 a mechanical inclinometer an example of which is described in Applicant's above referenced international publication no. WO 03/038232.

As an alternative to the Van Ruth (ie pin type) face orientator 120, core face orientation may be obtained by other devices including, marker pencils and scribes, optical or electromagnetic imaging and distance measuring devices. The logging of azimuth can be achieved using any known electronic system when measured by the electronic orientation device 20, or any known mechanical system when measured by a mechanical orientation device 146. These include for example the use of magnetometers to sense magnetic direction when used in conjunction with non-magnetic drilling equipment or if attached in a position outside the drill string to avoid magnetic interference. Azimuth may also be recorded using gyroscope type sensors to measure inertial change in position from a known reference point; or by use of a gyrocompass or north seeking gyroscope type sensor.

All such modifications and variations together with others that would be obvious to a person of ordinary skill in the art are deemed to be within the scope of the present invention the nature of which is to be determined from the above description, and the appended claims.

The claims defining the invention are as follows:

1. A core orientation tool for providing an indication of *in situ* orientation of a core sample extracted from a borehole by a core drill the tool comprising:

an electronic orientation system coupled with the core drill, the electronic orientation system configured, upon receiving a trigger signal, to log one or more first indications of orientation of the tool; and,

a trigger system that provides the trigger signal upon detecting one or more downhole events associated with operation of the core drill.

2. A core orientation tool for providing an indication of *in situ* orientation of a core sample extracted from a borehole by a core drill the tool comprising:

an electronic orientation system coupled with the core drill, the electronic orientation system configured, upon receiving a trigger signal, to log one or more first indications of orientation of the tool; and,
a trigger system that provides the trigger signal upon one or both of (a) detecting one or more downhole events associated with operation of the core drill, and (b) effluxion of time.

3. A core orientation tool for providing an indication of in situ orientation of a core sample extracted from a borehole by a core drill the tool comprising:

an electronic orientation system coupled with the core drill, the electronic orientation system configured to log one or more first indications of orientation of the tool; and,

a trigger system that provides a trigger signal upon detecting one or more downhole events associated with operation of the core drill; and,
wherein tool is configured to associate the one or more first indications of orientation with the trigger signal.

4. The core orientation tool according to any one of claims 1-3 wherein trigger signal is one of a plurality of trigger signals provided by the trigger system.

5. The core orientation tool according to claim 4 wherein the tool is configured to log different first indications of orientation upon receipt of different trigger signals.

6. The tool according to any one of claims 1-5 wherein the one or more downhole events comprise respective physical events arising from motion of the tool or the drill in the borehole.

7. The tool according to claim 6 wherein the motion comprise one or a combination of:

(a) motion in an uphole direction;

(b) a change in motion from motion having a linear component in a downhole direction to motion having no linear component;

(c) a change in motion from motion in a downhole direction to motion in an uphole direction;

(d) a change in motion from no linear motion to motion in an uphole direction;

(e) a change in characteristics of vibration motion on the tool or drill arising from the cessation or commencement of drilling;

(f) a change in speed of linear motion of the tool;

(g) any change in velocity (speed and/or direction of movement) ; and,

(h) a change in the rate or direction of rotation around the tool's longitudinal, lateral or normal axis .

8 . The tool according to any one of claims 1-7 wherein the trigger system is configured to provide the trigger signal upon detecting a predetermined event or sequence of downhole events.

9 . The tool according to claim 8 wherein the sequence of downhole events comprise a cessation of drilling followed by motion of the tool in an uphole direction.

10. The tool according to claim 9 wherein the sequence of downhole events further comprise commencement of drilling prior to the cessation of drilling.

11. The tool according to claim 10 wherein the sequence of downhole events further comprise one or more of:

(a) detecting contact of a backend assembly to which the tool is coupled hitting a landing ring in the core drill;

(b) detecting the backend assembly hitting a water table in a drilling operation where the drill is operated in the borehole below the water table;

(c) detecting release of the backend assembly from a wire line when initially inserting a core tube into the core drill;

(d) detecting the tool or core drill tagging a toe of the bore hole;

(e) an overshot hitting and latching onto the backend assembly;

(f) retrieval of the backend assembly from the drill hole; and,

(g) a change in the flow of fluid through or around the backend assembly.

12. The tool according to any one of claims 1-11 wherein the electronic orientation system further comprises an electronic azimuth measuring device, wherein the electronic azimuth measuring device operates to log azimuth upon receiving the trigger signal .

13 . The tool according to claim 12 wherein the electronic azimuth measuring device is configured to operate in an idle state prior to receipt of the trigger signal.

14 . The tool according to claim 13 wherein the electronic azimuth measuring device comprises an electronic gyroscope .

15. A core retrieval system for a core drill comprising:

a core tube having an uphole end and a downhole end, the downhole end provided with an opening for receiving a core sample cut by the core drill; and,

a core orientation tool in accordance with any one of claims 1-14, wherein the core orientation tool is coupled to the core tube at a location uphole of the downhole end of the core tube.

16. The core retrieval system according to claim 15 further comprising a backend assembly coupled to the uphole end of the core tube and wherein the core orientation tool is attached to the backend assembly uphole of the uphole end of the core tube.

17. A method of logging *in situ* orientation of a core sample extracted from the ground by a core drill comprising :

coupling an electronic core orientation device in a known spatial relationship to a core sample cut by the core drill;

configuring the electronic core orientation device to log one or more indications of orientation of the device upon receipt of a trigger signal; and,

providing the trigger signal upon detecting one or more downhole events associated with the operation of the core drill.

18. The method according to claim 17 wherein the downhole events are indicative of a, or an imminent, core break.

19. The method according to claim 17 or 18 wherein detecting of the one or more downhole events comprises detecting an uphole motion of the device.

20. The method according to claim 19 wherein the detecting of the downhole event comprises detecting a cessation of

drilling prior to detecting the uphole motion of the device .

21. The method according to claim 20 wherein the detecting further comprises detecting commencement of drilling prior to detecting cessation of drilling.

22. The method according to claim 21 wherein the detecting comprise detecting a cessation of downhole movement of the device prior to detecting the commencement of drilling.

23. The method according to any one of claims 17- 22 wherein the configuring comprises configuring the electronic core orientation device to determine azimuth.

24 . The method according to claim 23 further comprising withdrawing the tool after the trigger system provides the trigger system and operating the electronic core orientation device to track changes in orientation until the tool reaches a collar of the borehole.

25. A core orientation apparatus for providing an indication of orientation of a core sample extracted from a borehole by a core drill the apparatus comprising:

a core orientation tool according to any one of claims 1-14 and,

one or more secondary orientation devices which provide one or more second indications of orientation of the core or borehole, wherein the electronic orientation device is in a known rotational position relative to the one or more secondary orientation devices.

26. The apparatus according to claim 25 wherein the secondary devices comprise one or both of (a) a core face orientation device which records orientation of an uphole face of a core sample; and (b) a bottom of hole recording device .

27. The apparatus according to claim 25 or 26, wherein the tool comprises a body having a downhole end and an uphole end, wherein a the one or more secondary orientation devices are located downhole of the body and the electronic orientation device is located between the secondary orientation devices and the downhole end of the body.

28. The apparatus according to claim 25 or 26, wherein the tool comprises a body having a downhole end and an uphole end, wherein the one or more secondary orientation devices are located downhole of the body and the electronic orientation device is located uphole of the body.

29. The apparatus according to claim 27 or 28, wherein the body is provided with a positional reference for the first and second indications of orientation, and one or more keys for keying the electronic orientation device and the one or more secondary orientation devices to the position reference.

30. A core retrieval system for a core drill comprising:

an inner core tube having an uphole end and an opposite downhole end provided with an opening for receiving a core cut by the core drill; and,

a core orientation tool coupled to the inner core barrel and movable inside the inner core tube in an uphole direction by abutment with the core, wherein the core orientation tool accords with any one of claims 1-14.

31. The core orientation tool according to any one of claims 1-14 wherein the tool is configured to analyse outputs from sensors and transducers in the trigger system that detect the downhole events, to verify correct operation of the tool.

32. The core orientation tool according to claim 31

wherein the tool is configured to analyse outputs from sensors and transducers in the trigger system that detect the downhole events to verify that the core drill was stationary when a core break operation was performed.

33. The method according to any one of claims 17-24 comprising analyzing outputs from sensors and transducers in the trigger system that detect the downhole events, to verify correct operation of the tool .

34 . The method according to claim 33 wherein the analyzing comprises analyzing the outputs to verify the core drill was stationary at when a core break operation occurred.

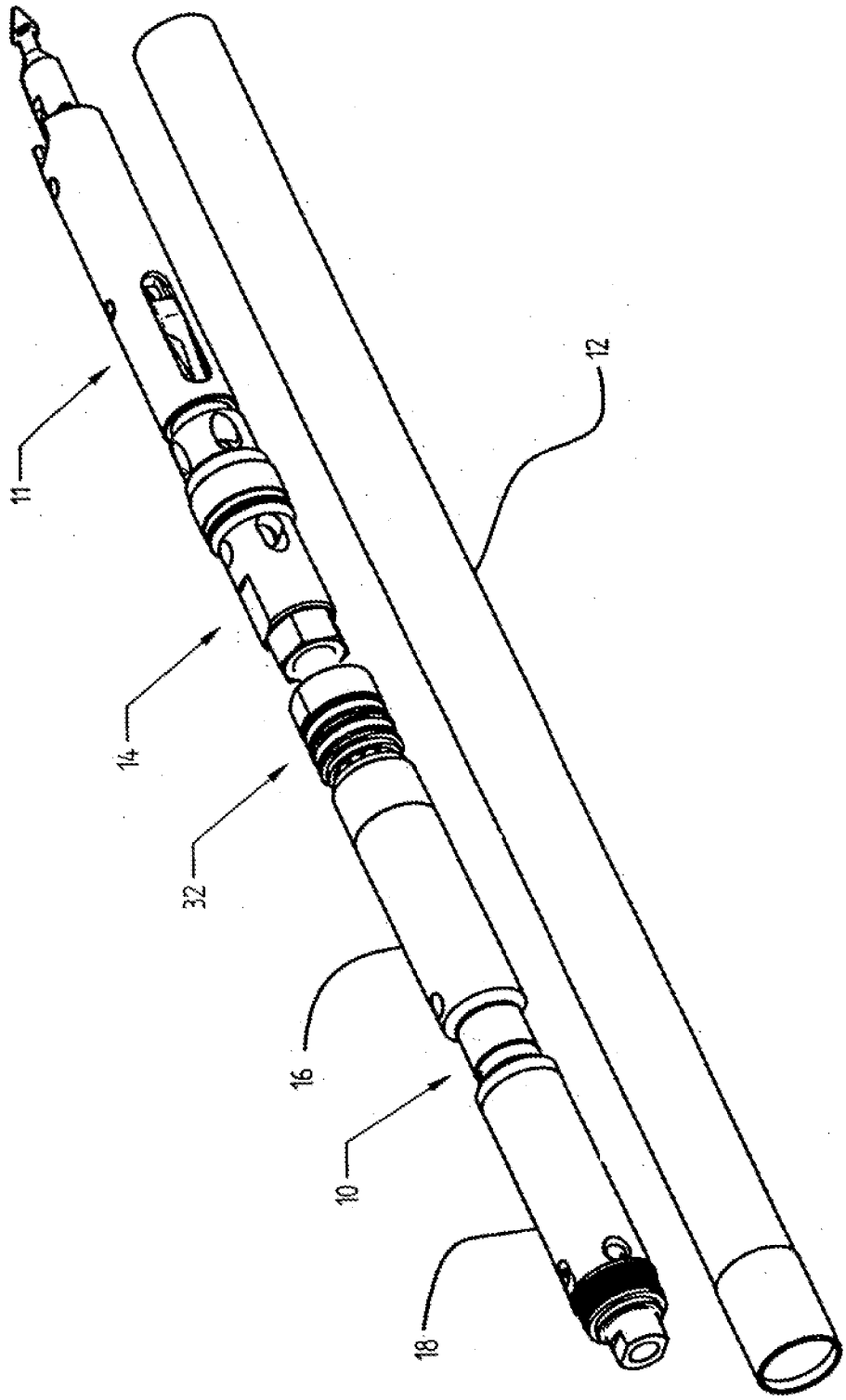

Figure 1

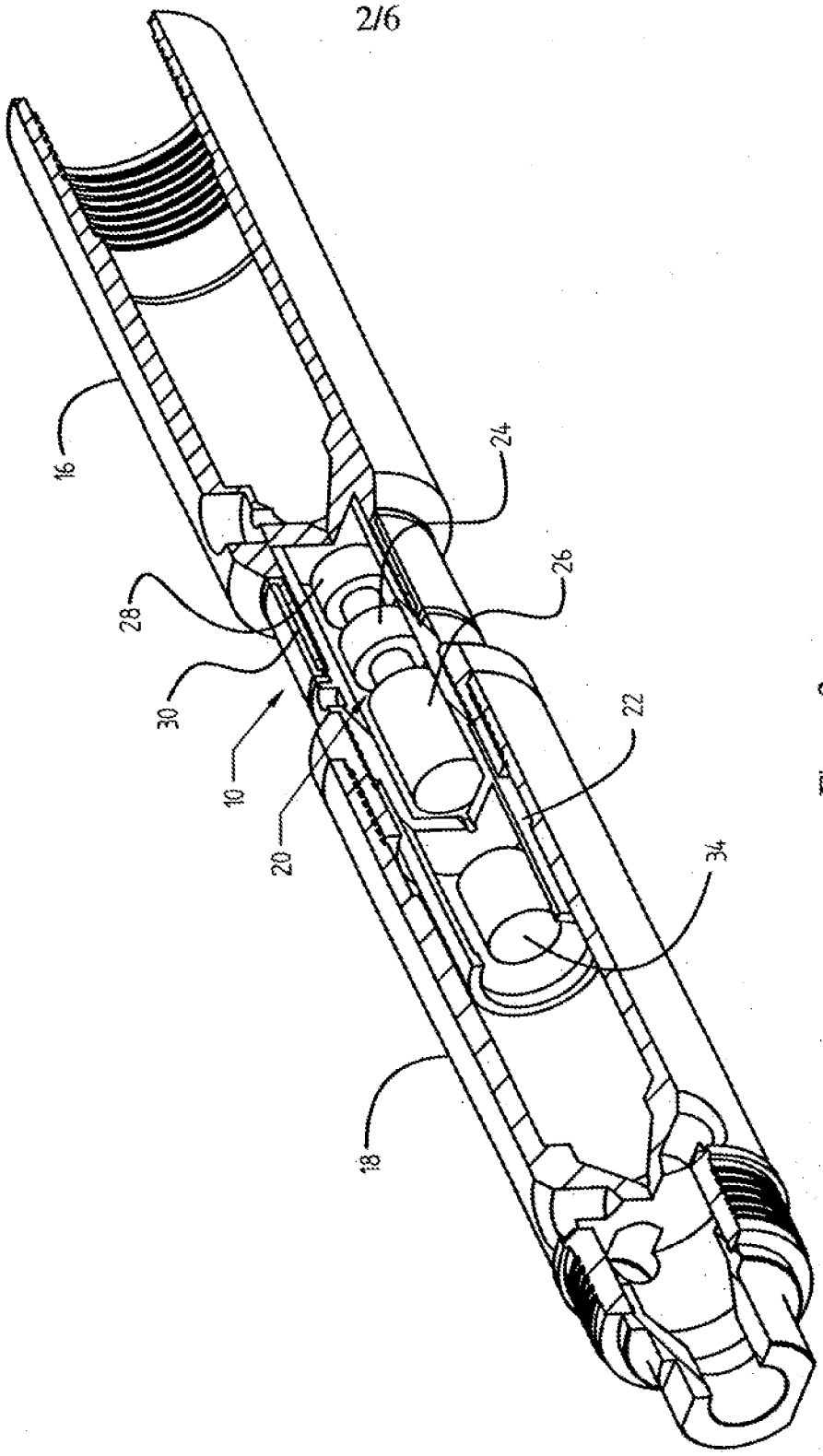

Figure 2

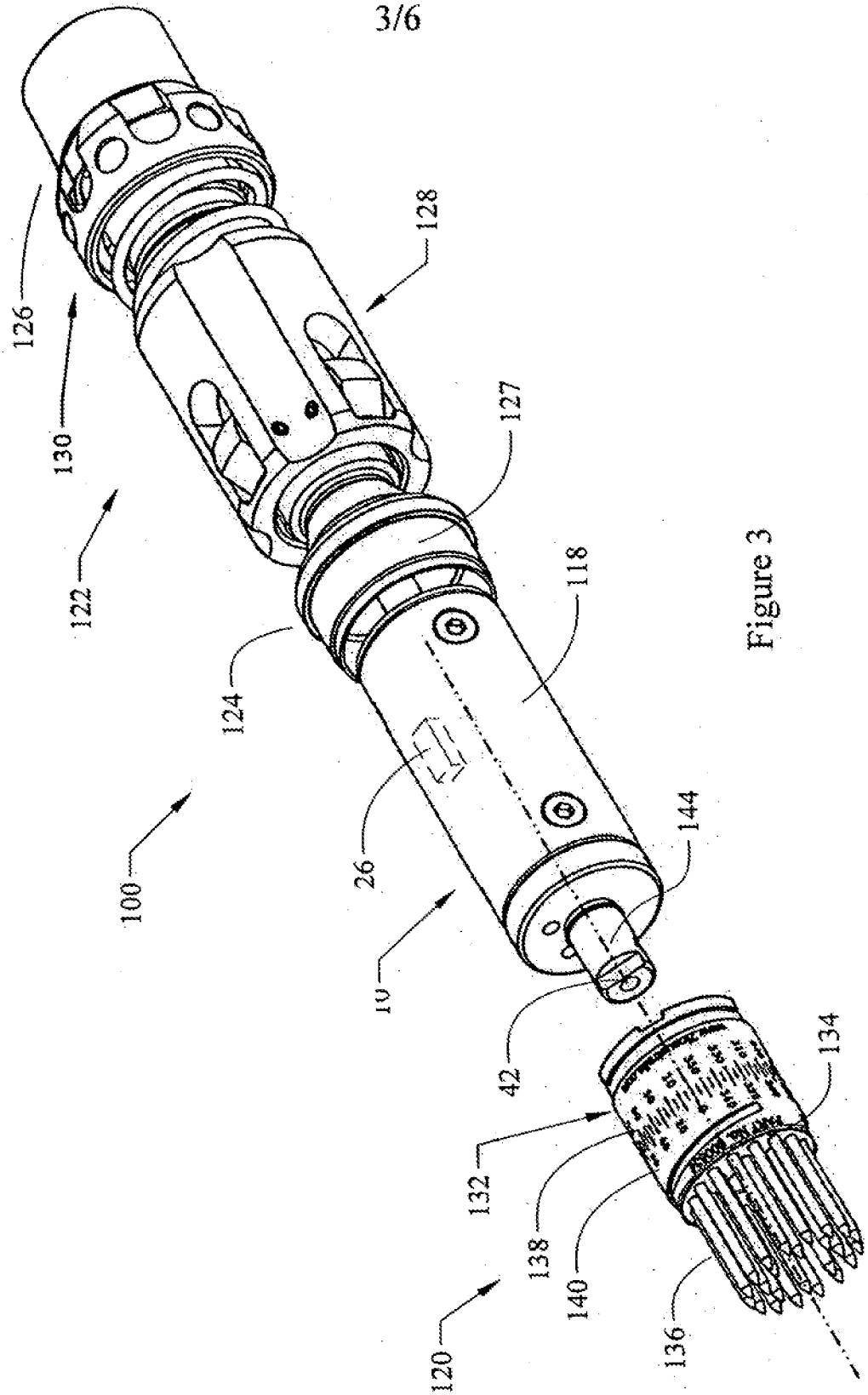
126
130
122
100
124
128
127
118
26
10
42
144
132
138
140
120
136
134

Figure 3

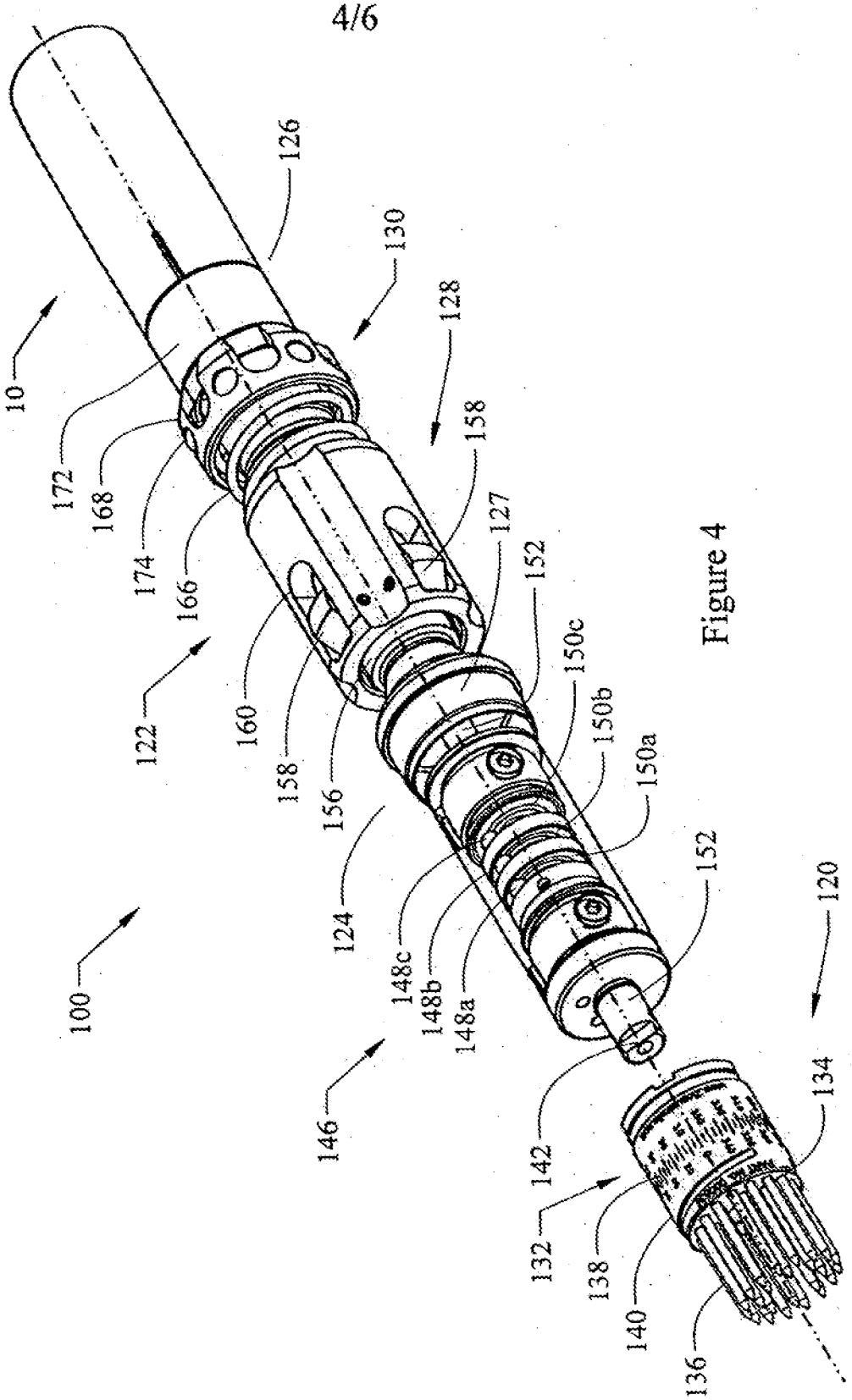
10
100
122
124
126
127
128
130
132
134
136
138
140
142
146
148a
148b
148c
150a
150b
150c
152
152
156
158
158
160
166
168
172
174
120

Figure 4

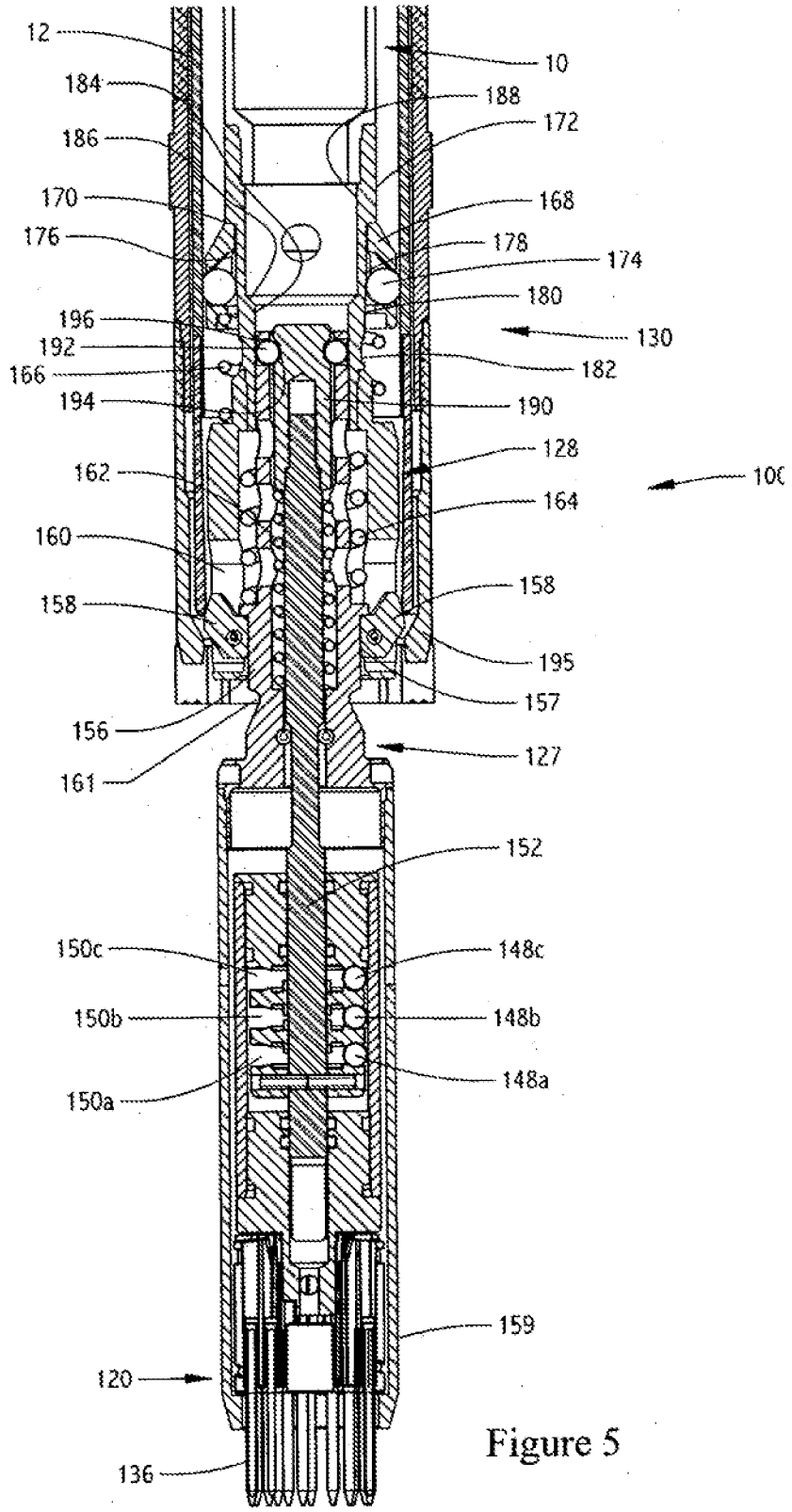
12
184
186
170
176
196
192
166
194
162
160
158
156
161
10
188
172
168
178
174
180
130
182
190
128
100
164
158
195
157
127
152
150c
150b
150a
148c
148b
148a
159
120
136

Figure 5

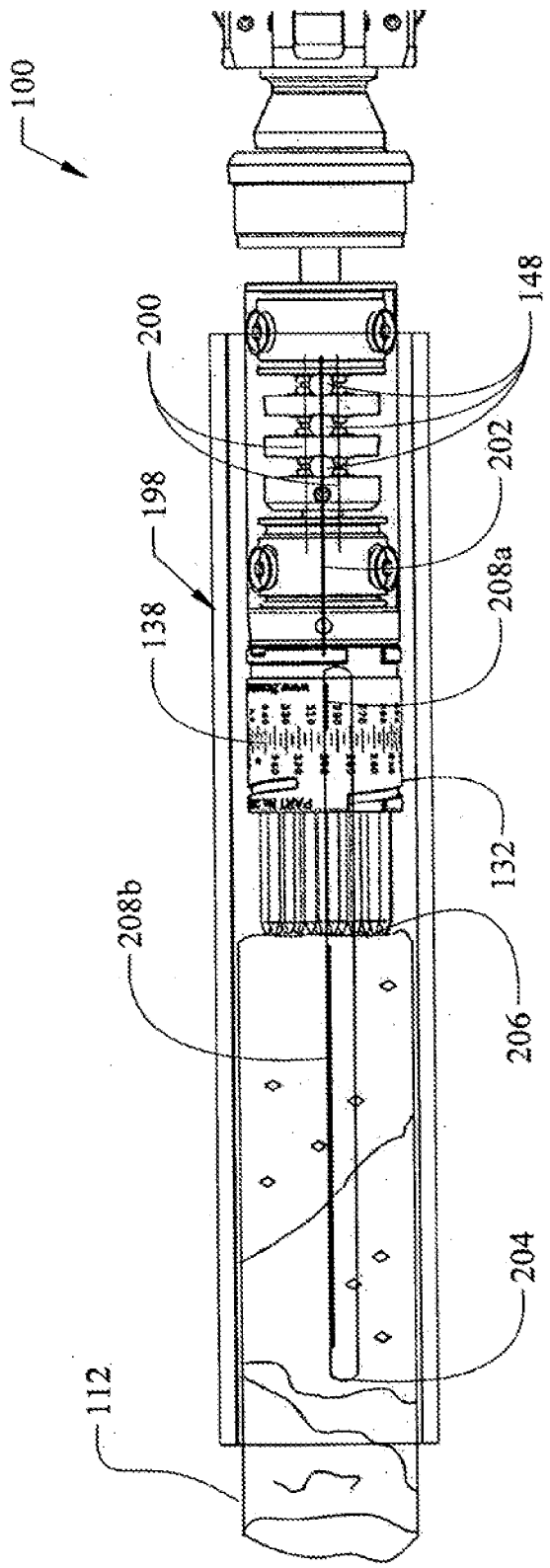

Figure 6

INTERNATIONAL SEARCH REPORT

International application No
PCT/AU2008/000395

A CLASSIFICATION OF SUBJECT MATTER

Int. Cl. ***E21B 25/16*** (2006.01) ***E21B 49/02*** (2006.01)

According to International Patent Classification (IPC) or to both national classification and IPC

B FIELDS SEARCHED

Minimum documentation searched (classification system followed by classification symbols)

Documentation searched other than minimum documentation to the extent that such documents are included in the fields searched

Electronic data base consulted during the international search (name of data base and, where practicable, search terms used)
Dwpi: E21B 25/16, 49/02 with keywords (trigger+, sens*, signal+, azimuth+, gyroscop+, generat+, activate+, detect+, electronic+)

C DOCUMENTS CONSIDERED TO BE RELEVANT

Category*	Citation of document, with indication, where appropriate, of the relevant passages	Relevant to claim No
x	WO 2006/024111 A1 (AUSTRALIAN MUD COMPANY LTD) 9 March 2006 Page 10, line 18 - page 24, line 25	1-10, 12-25, 30 and 31-34
x	WO 2006/058377 A1 (CORETRACK PTY LTD) 8 June 2006 Page 3, line 9 - page 5, line 15, claims 1-9 and Figures 1-4	1-10, 12-25, 30 and 31-34
x	Derwent Abstract Accession No 97-242837/22, Class X25, JP 09078975 A (NIPPON SHINKO KK) 25 March 1997	1-10, 12-25, 30 and 31-34
A	US 6006844 (PUYMBROECK et al) 28 December 1999 The whole document	1-34

[X] Further documents are listed in the continuation of Box C [X] See patent family annex

* Special categories of cited documents
"A" document defining the general state of the art which is not considered to be of particular relevance
"E" earlier application or patent but published on or after the international filing date
"L" document which may throw doubts on priority claim(s) or which is cited to establish the publication date of another citation or other special reason (as specified)
"O" document referring to an oral disclosure, use, exhibition or other means
"P" document published prior to the international filing date but later than the priority date claimed
"T" later document published after the international filing date or priority date and not in conflict with the application but cited to understand the principle or theory underlying the invention
"X" document of particular relevance; the claimed invention cannot be considered novel or cannot be considered to involve an inventive step when the document is taken alone
"Y" document of particular relevance; the claimed invention cannot be considered to involve an inventive step when the document is combined with one or more other such documents, such combination being obvious to a person skilled in the art
"&" document member of the same patent family

Date of the actual completion of the international search	Date of mailing of the international search report
05 May 2008	17 MAY 2008
Name and mailing address of the ISA/AU AUSTRALIAN PATENT OFFICE PO BOX 200, WODEN ACT 2606, AUSTRALIA E-mail address: pct@ipaustralia.gov.au Facsimile No. +61 2 6283 7999	Authorized officer **LEOPOLD FILIPOVIC** AUSTRALIAN PATENT OFFICE (ISO 9001 Quality Certified Service) Telephone No. (02) 6283 2105

Form PCT/ISA/210 (second sheet) (April 2007)

INTERNATIONAL SEARCH REPORT

International application No.
PCT/AU2008/000395

C (Continuation). DOCUMENTS CONSIDERED TO BE RELEVANT

Category*	Citation of document, with indication, where appropriate, of the relevant passages	Relevant to claim No.
A	CA 2456506 A1 (SCOTT) 3 January 2005 The whole document	1-34
A	WO 2005/085584 A1 (2iC AUSTRALIA PTY LTD) 15 September 2005 The whole document	1-34

INTERNATIONAL SEARCH REPORT

Information on patent family members

International application No.
PCT/AU2008/000395

This Annex lists the known "A" publication level patent family members relating to the patent documents cited in the above-mentioned international search report. The Australian Patent Office is in no way liable for these particulars which are merely given for the purpose of information.

Patent Document Cited in Search Report		Patent Family Member					
WO	2006024111	AU	2005256104	AU	2006100113	CA	2559030
		US	2007282533				
WO	2006058377	AU	2005312340	EP	1817480		
JP	9078975						
US	6006844	BE	1011414	CA	2158903	DE	19745947
		GB	2293395	GB	2318372	NO	953755
		NO	974786	US	5568838		
CA	2456506						
WO	2005085584	AU	2005219460	CA	2559085		

Due to data integration issues this family listing may not include 10 digit Australian applications filed since May 2001.

END OF ANNEX

Electronic Acknowledgement Receipt

EFS ID:	43327960
Application Number:	17082877
International Application Number:	
Confirmation Number:	1013
Title of Invention:	CORE BARREL HEAD ASSEMBLY WITH AN INTEGRATED SAMPLE ORIENTATION TOOL AND SYSTEM FOR USING SAME
First Named Inventor/Applicant Name:	CHRISTOPHER L. DRENTH
Customer Number:	23859
Filer:	Benjamin D Kirk
Filer Authorized By:	
Attorney Docket Number:	36362.0150U5
Receipt Date:	23-JUL-2021
Filing Date:	28-OCT-2020
Time Stamp:	14:31:13
Application Type:	Utility under 35 USC 111(a)

Payment information:

Submitted with Payment	no

File Listing:

Document Number	Document Description	File Name	File Size(Bytes)/ Message Digest	Multi Part /.zip	Pages (if appl.)
1	Transmittal Letter	36362_0150U5_Transmittal_IDS.pdf	149026 ec8ca1b5f3b21c9b439ddd8e0f0aa49eb42ebb3c	no	2

Warnings:

Information:					
2	Information Disclosure Statement (IDS) Form (SB08)	36362_0150U5_SB08_IDS.pdf	175734 eb36bb89fcd1cb3b36468ab9840141f62944bde0	no	2
Warnings:					
Information:					
This is not an USPTO supplied IDS fillable form					
3	Foreign Reference	WO2013126955.pdf	8473306 c883021ffe056ee94ec850f53863bc9fe57911b4	no	82
Warnings:					
Information:					
4	Foreign Reference	WO2008113127.pdf	4553901 4fc2b48fe7bc08d1212e85b464036d46bc6b5a19	no	49
Warnings:					
Information:					
			Total Files Size (in bytes):	13351967	

This Acknowledgement Receipt evidences receipt on the noted date by the USPTO of the indicated documents, characterized by the applicant, and including page counts, where applicable. It serves as evidence of receipt similar to a Post Card, as described in MPEP 503.

<u>New Applications Under 35 U.S.C. 111</u>
If a new application is being filed and the application includes the necessary components for a filing date (see 37 CFR 1.53(b)-(d) and MPEP 506), a Filing Receipt (37 CFR 1.54) will be issued in due course and the date shown on this Acknowledgement Receipt will establish the filing date of the application.
<u>National Stage of an International Application under 35 U.S.C. 371</u>
If a timely submission to enter the national stage of an international application is compliant with the conditions of 35 U.S.C. 371 and other applicable requirements a Form PCT/DO/EO/903 indicating acceptance of the application as a national stage submission under 35 U.S.C. 371 will be issued in addition to the Filing Receipt, in due course.
<u>New International Application Filed with the USPTO as a Receiving Office</u>
If a new international application is being filed and the international application includes the necessary components for an international filing date (see PCT Article 11 and MPEP 1810), a Notification of the International Application Number and of the International Filing Date (Form PCT/RO/105) will be issued in due course, subject to prescriptions concerning national security, and the date shown on this Acknowledgement Receipt will establish the international filing date of the application.

I hereby certify that this paper (along with any paper referred to as being attached or enclosed) is being transmitted via the Office electronic filing system in accordance with 37 CFR § 1.6(a)(4).

Dated: July 23, 2021
Electronic Signature for Benjamin D. Kirk /Benjamin D. Kirk/

ATTORNEY DOCKET NO. 36362.0150U5
VIA EFS-WEB
PATENT

IN THE UNITED STATES PATENT AND TRADEMARK OFFICE

In re Application of	)	
	)	
CHRISTOPHER L. DRENTH, ET AL.	)	Art Unit: 3676
	)	
Application No.: 17/082,877	)	Examiner: *Not Yet Assigned*
	)	
Filing Date: October 28, 2020	)	Confirmation No.: 1013
	)	
For: **CORE BARREL HEAD ASSEMBLYWITH AN INTEGRATED SAMPLE ORIENTATION TOOL AND SYSTEM FOR USING SAME**	)	

SUPPLEMENTAL INFORMATION DISCLOSURE STATEMENT

MAIL STOP AMENDMENT
Commissioner for Patents
P. O. Box 1450
Alexandria, VA 22313-1450

BALLARD SPAHR LLP
Customer No. 23859

July 23, 2021

Commissioner:

Pursuant to the requirements set forth in 37 C.F.R. § 1.56, Applicant now submits a list of documents known to Applicant or Applicant's attorneys. Pursuant to 37 C.F.R. § 1.98(a)(2)(iv), and for the Examiner's review, Applicant has enclosed (1) copies of documents from the prosecution of related U.S. and non-U.S. patent applications, and (2) copies of non-U.S. patents or non-U.S. patent application publications. In accordance with 37 C.F.R. § 1.98(a)(2), copies of any cited U.S. patent or U.S. patent application publication documents are not enclosed.

Applicant has enclosed an English language abstract of any non-U.S. Patent or Patent Application which is written in a foreign language.

Pursuant to 37 C.F.R. § 1.97(b)(3), Applicant submits that this document is timely filed in that the Patent and Trademark Office has not yet mailed to Applicant a first Office Action on the merits. Applicant submits that no fee is due; however, Applicant hereby authorizes the Commissioner to charge to Deposit Account No. 14-0629 any fee that may be required to effect the consideration and entry of this Information Disclosure Statement and List and the references contained therein.

REFLEX EXHIBIT 1013 - 349/432

Respectfully submitted,

Electronic signature: /Benjamin D. Kirk/
Benjamin D. Kirk
Registration No.: 74,848
BALLARD SPAHR LLP
Correspondence Customer Number: 23859

UNITED STATES PATENT AND TRADEMARK OFFICE

UNITED STATES DEPARTMENT OF COMMERCE
United States Patent and Trademark Office
Address: COMMISSIONER FOR PATENTS
P.O. Box 1450
Alexandria, Virginia 22313-1450
www.uspto.gov

APPLICATION NUMBER	FILING OR 371(C) DATE	FIRST NAMED APPLICANT	ATTY. DOCKET NO./TITLE
17/082,877	10/28/2020	CHRISTOPHER L. DRENTH	36362.0150U5

CONFIRMATION NO. 1013

PUBLICATION NOTICE

OC000000123807813

23859
BALLARD SPAHR LLP
SUITE 1600
999 PEACHTREE STREET
ATLANTA, GA 30309-4421

Title:CORE BARREL HEAD ASSEMBLY WITH AN INTEGRATED SAMPLE ORIENTATION TOOL AND SYSTEM FOR USING SAME

Publication No.US-2021-0062600-A1
Publication Date:03/04/2021

NOTICE OF PUBLICATION OF APPLICATION

The above-identified application will be electronically published as a patent application publication pursuant to 37 CFR 1.211, et seq. The patent application publication number and publication date are set forth above.

The publication may be accessed through the USPTO's publically available Searchable Databases via the Internet at www.uspto.gov. The direct link to access the publication is currently http://www.uspto.gov/patft/.

The publication process established by the Office does not provide for mailing a copy of the publication to applicant. A copy of the publication may be obtained from the Office upon payment of the appropriate fee set forth in 37 CFR 1.19(a)(1). Orders for copies of patent application publications are handled by the USPTO's Public Records Division. The Public Records Division can be reached by telephone at (571) 272-3150 or (800) 972-6382, by facsimile at (571) 273-3250, by mail addressed to the United States Patent and Trademark Office, Public Records Division, Alexandria, VA 22313-1450 or via the Internet.

In addition, information on the status of the application, including the mailing date of Office actions and the dates of receipt of correspondence filed in the Office, may also be accessed via the Internet through the Patent Electronic Business Center at www.uspto.gov using the public side of the Patent Application Information and Retrieval (PAIR) system. The direct link to access this status information is currently https://portal.uspto.gov/pair/PublicPair. Prior to publication, such status information is confidential and may only be obtained by applicant using the private side of PAIR.

Further assistance in electronically accessing the publication, or about PAIR, is available by calling the Patent Electronic Business Center at 1-866-217-9197.

Office of Data Managment, Application Assistance Unit (571) 272-4000, or (571) 272-4200, or 1-888-786-0101

PTO/SB/08a (07-09)
Approved for use through 11/30/2020. OMB 0651-0031
U.S. Patent and Trademark Office; U.S. DEPARTMENT OF COMMERCE
Under the Paperwork Reduction Act of 1995, no persons are required to respond to a collection of information unless it contains a valid OMB control number.

Substitute for form 1449/PTO

INFORMATION DISCLOSURE STATEMENT BY APPLICANT

(Use as many sheets as necessary)

Sheet	1	of	5

Complete if Known	
Application Number	17/082,877
Filing Date	October 28, 2020
First Named Inventor	Christopher L. Drenth
Art Unit	3676
Examiner Name	Not Yet Assigned
Attorney Docket Number	36362.0150U5

U. S. PATENT DOCUMENTS

Examiner Initials*	Cite No.[1]	Document Number Number-Kind Code[2] (if known)	Publication Date MM-DD-YYYY	Name of Patentee or Applicant of Cited Document	Pages, Columns, Lines, Where Relevant Passages or Relevant Figures Appear
	A	US-2,944,792-A	07-12-1960	Gros	
	B	US-4,955,438	09-11-1990	Juergens et al.	
	C	US-5,601,152	02-11-1997	Harrison	
	D	US-6,732,818	05-11-2004	Gregory	
	E	US-7,296,638	11-20-2007	Beach et al.	
	F	US-10,047,581	08-14-2018	Drenth et al.	
	G	US-10,465,463	11-05-2019	Drenth et al.	
	H	US-2012/0145461-A1	06-14-2012	Cravatte	
	I	US-2015/0300162-A1	10-22-2015	Drenth et al.	
	J	US-2018/0305995-A1	10-25-2018	Drenth et al.	

FOREIGN PATENT DOCUMENTS

Examiner Initials*	Cite No.[1]	Foreign Patent Document Country Code[3] Number[4] Kind Code[5] (if known)	Publication Date MM-DD-YYYY	Name of Patentee or Applicant of Cited Document	Pages, Columns, Lines, Where Relevant Passages Or Relevant Figures Appear	T[6]
	A**	AU-2015249889-B2	08-01-2019	Globaltech Corp Pty Ltd		
	B**	CN-101649727-A	02-17-2010	Univ China Mining		
	C**	CN-201396092-Y	02-03-2010	Univ China Mining		
	D**	EP-2134921-A1	12-23-2009	2iC Australia Pty Ltd.		
	E	EP-3134600	03-01-2017	Longyear Tm, Inc		
	F**	GB-2243173-A	10-23-1991	Seafloors Eng Inc		
	G**	WO-2006/024111	03-09-2006	AUSTRALIAN MUD COMPANY LTD		

Examiner Signature		Date Considered	

*EXAMINER: Initial if reference considered, whether or not citation is in conformance with MPEP 609. Draw line through citation if not in conformance and not considered. Include copy of this form with next communication to applicant. [1] Applicant's unique citation designation number (optional). [2] See Kinds Codes of USPTO Patent Documents at www.uspto.gov or MPEP 901.04. [3] Enter Office that issued the document, by the two-letter code (WIPO Standard ST.3). [4] For Japanese patent documents, the indication of the year of the reign of the Emperor must precede the serial number of the patent document. [5] Kind of document by the appropriate symbols as indicated on the document under WIPO Standard ST.16 if possible. [6] Applicant is to place a check mark here if English language Translation is attached.

I hereby certify that this paper (along with any paper referred to as being attached or enclosed) is being transmitted via the Office electronic filing system in accordance with 37 C.F.R. § 1.6(a)(4).

Dated: February 4, 2021 Electronic Signature: /Benjamin D. Kirk/ (Benjamin D. Kirk)

PTO/SB/08a (07-09)
Approved for use through 11/30/2020. OMB 0651-0031
U.S. Patent and Trademark Office; U.S. DEPARTMENT OF COMMERCE
Under the Paperwork Reduction Act of 1995, no persons are required to respond to a collection of information unless it contains a valid OMB control number.

Substitute for form 1449/PTO

INFORMATION DISCLOSURE STATEMENT BY APPLICANT

(Use as many sheets as necessary)

Sheet	2	of	5

Complete if Known	
Application Number	17/082,877
Filing Date	October 28, 2020
First Named Inventor	Christopher L. Drenth
Art Unit	3676
Examiner Name	Not Yet Assigned
Attorney Docket Number	36362.0150U5

U. S. PATENT DOCUMENTS

Examiner Initials*	Cite No.[1]	Document Number Number-Kind Code[2] (if known)	Publication Date MM-DD-YYYY	Name of Patentee or Applicant of Cited Document	Pages, Columns, Lines, Where Relevant Passages or Relevant Figures Appear

FOREIGN PATENT DOCUMENTS

Examiner Initials*	Cite No.[1]	Foreign Patent Document Country Code[3] Number[4] Kind Code[5] (if known)	Publication Date MM-DD-YYYY	Name of Patentee or Applicant of Cited Document	Pages, Columns, Lines, Where Relevant Passages Or Relevant Figures Appear	T[6]
	H**	WO-2007/104103-A1	09-20-2007	2ic Australia Pty Ltd,		
	I**	WO-2007/137356	12-06-2007	2IC AUSTRALIA PTY LTD		
	J**	WO-2008/113127-A1	09-25-2008	2ic Australia Pty Ltd,		
	K**	WO-2010/094060	08-26-2010	IMDEX TECHNOLOGY AUSTRALIA PTY		
	L**	WO-2013/040641	03-28-2013	IMDEX GLOBAL BV		
	M**	WO-2013/126955	09-06-2013	GLOBALTECH CORP PTY LTD		

Examiner Signature		Date Considered	

*EXAMINER: Initial if reference considered, whether or not citation is in conformance with MPEP 609. Draw line through citation if not in conformance and not considered. Include copy of this form with next communication to applicant. [1] Applicant's unique citation designation number (optional). [2] See Kinds Codes of USPTO Patent Documents at www.uspto.gov or MPEP 901.04. [3] Enter Office that issued the document, by the two-letter code (WIPO Standard ST.3). [4] For Japanese patent documents, the indication of the year of the reign of the Emperor must precede the serial number of the patent document. [5] Kind of document by the appropriate symbols as indicated on the document under WIPO Standard ST.16 if possible. [6] Applicant is to place a check mark here if English language Translation is attached.

PTO/SB/08a (07-09)
Approved for use through 11/30/2020. OMB 0651-0031
U.S. Patent and Trademark Office; U.S. DEPARTMENT OF COMMERCE
Under the Paperwork Reduction Act of 1995, no persons are required to respond to a collection of information unless it contains a valid OMB control number.

Substitute for form 1449/PTO

INFORMATION DISCLOSURE STATEMENT BY APPLICANT

(Use as many sheets as necessary)

Sheet	3	of	5

Complete if Known	
Application Number	17/082,877
Filing Date	October 28, 2020
First Named Inventor	Christopher L. Drenth
Art Unit	3676
Examiner Name	Not Yet Assigned
Attorney Docket Number	36362.0150U5

U. S. PATENT DOCUMENTS

Examiner Initials*	Cite No.[1]	Document Number Number-Kind Code[2] (if known)	Publication Date MM-DD-YYYY	Name of Patentee or Applicant of Cited Document	Pages, Columns, Lines, Where Relevant Passages or Relevant Figures Appear

FOREIGN PATENT DOCUMENTS

Examiner Initials*	Cite No.[1]	Foreign Patent Document Country Code[3] Number[4] Kind Code[5] (if known)	Publication Date MM-DD-YYYY	Name of Patentee or Applicant of Cited Document	Pages, Columns, Lines, Where Relevant Passages Or Relevant Figures Appear	T[6]
	N**	WO-2014/053012-A1	04-10-2014	Minnovare Pty Ltd		
	O**	WO-2014/089618	06-19-2014	2IC AUSTRALIA PTY LTD		
	P**	WO-2015/164394-A1	10-29-2015	Longyear Tm, Inc		

Examiner Signature		Date Considered	

*EXAMINER: Initial if reference considered, whether or not citation is in conformance with MPEP 609. Draw line through citation if not in conformance and not considered. Include copy of this form with next communication to applicant. [1] Applicant's unique citation designation number (optional). [2] See Kinds Codes of USPTO Patent Documents at www.uspto.gov or MPEP 901.04. [3] Enter Office that issued the document, by the two-letter code (WIPO Standard ST.3). [4] For Japanese patent documents, the indication of the year of the reign of the Emperor must precede the serial number of the patent document. [5] Kind of document by the appropriate symbols as indicated on the document under WIPO Standard ST.16 if possible. [6] Applicant is to place a check mark here if English language Translation is attached.

PTO/SB/08b (07-09)
Approved for use through 11/30/2020. OMB 0651-0031
U.S. Patent and Trademark Office; U.S. DEPARTMENT OF COMMERCE
Under the Paperwork Reduction Act of 1995, no persons are required to respond to a collection of information unless it contains a valid OMB control number.

Substitute for form 1449/PTO

INFORMATION DISCLOSURE STATEMENT BY APPLICANT

(Use as many sheets as necessary)

Sheet	4	of	5

Complete if Known	
Application Number	17/082,877
Filing Date	October 28, 2020
First Named Inventor	Christopher L. Drenth
Art Unit	3676
Examiner Name	Not Yet Assigned
Attorney Docket Number	36362.0150U5

NON PATENT LITERATURE DOCUMENTS

Examiner Initials*	Cite No.[1]	Include name of the author (in CAPITAL LETTERS), title of the article (when appropriate), title of the item (book, magazine, journal, serial, symposium, catalog, etc.), date, page(s), volume-issue number(s), publisher, city and/or country where published.	T[2]
	A**	International Search Report and Written Opinion were mailed on 7/24/2015 by the International Searching Authority for International Application No. PCT/US2015/026907, filed on 4/21/2015 and published as WO 2015/164394 on 10/29/2015 (Applicant- Longyear TM, Inc.) (Attorney Docket36362.0150P1) (11 Pages)	
	B**	International Preliminary Report on Patentability was mailed on 10/25/2016 by the International Searching Authority for International Application No. PCT/US2015/026907, filed on 4/21/2015 and published as WO 2015/164394 on 10/29/2015 (Applicant- Longyear TM, Inc.) (Attorney Docket36362.0150P1) (9 Pages)	
	C**	Third Party Observations dated August 17, 2016 for International Patent Application No. PCT/US2015/026907 (Applicant- Longyear TM, Inc.) (42 pages)	
	D**	Examination Report was issued on 8/14/2018 by the Australian Patent Office for AU Application No. 2015249889, which was filed on 4/21/2015 (Applicant- Longyear TM, Inc.) (Attorney Docket No.- 36362.0150AU1) (3 pages)	
	E	Notice of Acceptance was issued on 7/23/2019 by the Australian Patent Office for AU Application No. 2015249889, which was filed on 4/21/2015 (Applicant- Longyear TM, Inc.) (Attorney Docket No.- 36362.0150AU1) (3 pages)	
	F**	Office Action was issued on 7/11/2018 by the Chilean Patent Office for CL Application No. 2016-002684, which was filed on 4/21/2015 (Applicant- Longyear TM, Inc.) (Attorney Docket No.- 36362.0150CL1) (3 pages)	
	G**	First Office Action was issued on 9/10/2018 by the SIPO for CN Application No.2015800211077, filed on 4/21/2015 and published CN 107109899 as 8/29/2017 on (Applicant- Longyear TM, Inc.) (Attorney Docket 36362.0150CN1) (5 Pages)	
	H**	Second Office Action was issued on 1/19/2020 by the SIPO for CN Application No.2015800211077, filed on 4/21/2015 and published CN 107109899 as 8/29/2017 on (Applicant- Longyear TM, Inc.) (Attorney Docket 36362.0150CN1) (6 Pages)	
	I**	Extended European Search Report issued on 10/17/2017 by the European Patent Office for Application No. 15782230.5, which was filed on April 21, 2015 and published as EP 3134600 on March 1, 2017 (Inventor- Drenth et al.; Applicant- Longyear TM, Inc.) (Attorney Docket No.- 36362.0150EP1) (9 pages)	
	J**	Preliminary Amendment was mailed on 2/28/2017 to the USPTO for U.S. Application No. 14/692,484, which was filed on April 21, 2015 and granted as 10,047,581 on 8/14/2018 (Inventor- Drenth et al.; Applicant- Longyear TM, Inc.) (Attorney Docket No.- 36362.0150U2) (7 pages)	

Examiner Signature		Date Considered	

*EXAMINER: Initial if reference considered, whether or not citation is in conformance with MPEP 609. Draw line through citation if not in conformance and not considered. Include copy of this form with next communication to applicant.

[1] Applicant's unique citation designation number (optional). [2] Applicant is to place a check mark here if English language Translation is attached.

PTO/SB/08b (07-09)
Approved for use through 11/30/2020. OMB 0651-0031
U.S. Patent and Trademark Office; U.S. DEPARTMENT OF COMMERCE
Under the Paperwork Reduction Act of 1995, no persons are required to respond to a collection of information unless it contains a valid OMB control number.

Substitute for form 1449/PTO

INFORMATION DISCLOSURE STATEMENT BY APPLICANT

(Use as many sheets as necessary)

Sheet	5	of	5

Complete if Known	
Application Number	17/082,877
Filing Date	October 28, 2020
First Named Inventor	Christopher L. Drenth
Art Unit	3676
Examiner Name	Not Yet Assigned
Attorney Docket Number	36362.0150U5

NON PATENT LITERATURE DOCUMENTS

Examiner Initials*	Cite No.[1]	Include name of the author (in CAPITAL LETTERS), title of the article (when appropriate), title of the item (book, magazine, journal, serial, symposium, catalog, etc.), date, page(s), volume-issue number(s), publisher, city and/or country where published.	T[2]
	K**	Non Final Rejection was issued on 8/18/2017 by the USPTO for U.S. Application No. 14/692,484, which was filed on April 21, 2015 and granted as 10,047,581 on 8/14/2018 (Inventor- Drenth et al.; Applicant- Longyear TM, Inc.) (Attorney Docket No.- 36362.0150U2) (7 pages)	
	L**	Response to Non Final Rejection was mailed on 10/18/2017 to the USPTO for U.S. Application No. 14/692,484, which was filed on April 21, 2015 and granted as 10,047,581 on 8/14/2018 (Inventor-Drenth et al.; Applicant- Longyear TM, Inc.) (Attorney Docket No.- 36362.0150U2) (9 pages)	
	M**	Notice of Allowance was issued on 11/8/2017 by the USPTO for U.S. Application No. 14/692,484, which was filed on April 21, 2015 and granted as 10,047,581 on 8/14/2018 (Inventor- Drenth et al.; Applicant- Longyear TM, Inc.) (Attorney Docket No.- 36362.0150U2) (5 pages)	
	N**	Notice of Allowance was issued on 4/12/2018 by the USPTO for U.S. Application No. 14/692,484, which was filed on April 21, 2015 and granted as 10,047,581 on 8/14/2018 (Inventor- Drenth et al.; Applicant- Longyear TM, Inc.) (Attorney Docket No.- 36362.0150U2) (7 pages)	
	O**	Issue Notification was issued on 7/25/2018 by the USPTO for U.S. Application No. 14/692,484, which was filed on April 21, 2015 and granted as 10,047,581 on 8/14/2018 (Inventor- Drenth et al.; Applicant- Longyear TM, Inc.) (Attorney Docket No.- 36362.0150U2) (1 page)	
	P**	Non Final Rejection was issued on 3/14/2019 by the USPTO for U.S. Application No. 16/017,334, filed on 6/25/2018 and granted as 10,465,463 on 11/5/2019 (Inventor-CHRISTOPHER L. DRENTH) (Attorney Docket 36362.0150U3) (11 Pages)	
	Q**	Response Non Final Rejection was mailed on 6/12/2019 to the USPTO for U.S. Application No. 16/017,334, filed on 6/25/2018 and granted as 10,465,463 on 11/5/2019 (Inventor-CHRISTOPHER L. DRENTH) (Attorney Docket 36362.0150U3) (9 Pages)	
	R**	Notice of Allowance was issued on 3/14/2019 by the USPTO for U.S. Application No. 16/017,334, filed on 6/25/2018 and granted as 10,465,463 on 11/5/2019 (Inventor-CHRISTOPHER L. DRENTH) (Attorney Docket 36362.0150U3) (5 Pages)	
	S**	Issue Notification was issued on 3/14/2019 by the USPTO for U.S. Application No. 16/017,334, filed on 6/25/2018 and granted as 10,465,463 on 11/5/2019 (Inventor-CHRISTOPHER L. DRENTH) (Attorney Docket 36362.0150U3) (1 Page)	
	T**	"Devicore BBT Directional Core Drilling Borehole Planning Service" Retrieved from the Internet:URL:http://www.devico.com/products/devicore-bbt [stored on the Wayback Machine on February 14, 2014]	

Examiner Signature		Date Considered	

*EXAMINER: Initial if reference considered, whether or not citation is in conformance with MPEP 609. Draw line through citation if not in conformance and not considered. Include copy of this form with next communication to applicant.

[1] Applicant's unique citation designation number (optional). [2] Applicant is to place a check mark here if English language Translation is attached.

Electronic Acknowledgement Receipt

EFS ID:	41837551
Application Number:	17082877
International Application Number:	
Confirmation Number:	1013
Title of Invention:	CORE BARREL HEAD ASSEMBLY WITH AN INTEGRATED SAMPLE ORIENTATION TOOL AND SYSTEM FOR USING SAME
First Named Inventor/Applicant Name:	CHRISTOPHER L. DRENTH
Customer Number:	23859
Filer:	Benjamin D Kirk
Filer Authorized By:	
Attorney Docket Number:	36362.0150U5
Receipt Date:	04-FEB-2021
Filing Date:	28-OCT-2020
Time Stamp:	15:49:18
Application Type:	Utility under 35 USC 111(a)

Payment information:

Submitted with Payment	no

File Listing:

Document Number	Document Description	File Name	File Size(Bytes)/ Message Digest	Multi Part /.zip	Pages (if appl.)
1	Transmittal Letter	36362_0150U5_IDS_Statement .pdf	2959606 f658e8dfee189705c25927ecc175eac9575e488f	no	3

Warnings:

Information:					
2	Information Disclosure Statement (IDS) Form (SB08)	36362_0150U5_IDS_SB08.pdf	4749617 b005e4faa08fcfeb4b0d47305d9e4daab81e5276	no	5
Warnings:					
Information:					
This is not an USPTO supplied IDS fillable form					
			Total Files Size (in bytes):	7709223	

This Acknowledgement Receipt evidences receipt on the noted date by the USPTO of the indicated documents, characterized by the applicant, and including page counts, where applicable. It serves as evidence of receipt similar to a Post Card, as described in MPEP 503.

New Applications Under 35 U.S.C. 111
If a new application is being filed and the application includes the necessary components for a filing date (see 37 CFR 1.53(b)-(d) and MPEP 506), a Filing Receipt (37 CFR 1.54) will be issued in due course and the date shown on this Acknowledgement Receipt will establish the filing date of the application.
National Stage of an International Application under 35 U.S.C. 371
If a timely submission to enter the national stage of an international application is compliant with the conditions of 35 U.S.C. 371 and other applicable requirements a Form PCT/DO/EO/903 indicating acceptance of the application as a national stage submission under 35 U.S.C. 371 will be issued in addition to the Filing Receipt, in due course.
New International Application Filed with the USPTO as a Receiving Office
If a new international application is being filed and the international application includes the necessary components for an international filing date (see PCT Article 11 and MPEP 1810), a Notification of the International Application Number and of the International Filing Date (Form PCT/RO/105) will be issued in due course, subject to prescriptions concerning national security, and the date shown on this Acknowledgement Receipt will establish the international filing date of the application.

I hereby certify that this paper (along with any paper referred to as being attached or enclosed) is being transmitted via the Office electronic filing system in accordance with 37 CFR § 1.6(a)(4).

Dated: February 4, 2021
Electronic Signature for Benjamin D. Kirk /Benjamin D. Kirk/

ATTORNEY DOCKET NO. 36362.0150U5
VIA EFS-WEB
PATENT

IN THE UNITED STATES PATENT AND TRADEMARK OFFICE

In re Application of	)	
	)	
CHRISTOPHER L. DRENTH, ET AL.	)	Art Unit: 3676
	)	
Application No.: 17/082,877	)	Examiner: *Not Yet Assigned*
	)	
Filing Date: October 28, 2020	)	Confirmation No.: 1013
	)	
For: **CORE BARREL HEAD ASSEMBLYWITH AN INTEGRATED SAMPLE ORIENTATION TOOL AND SYSTEM FOR USING SAME**	)	

INFORMATION DISCLOSURE STATEMENT

MAIL STOP AMENDMENT
Commissioner for Patents
P. O. Box 1450
Alexandria, VA 22313-1450

BALLARD SPAHR LLP
Customer No. 23859

February 4, 2021

Commissioner:

Pursuant to the requirements set forth in 37 C.F.R. § 1.56, Applicant now submits a list of documents known to Applicant or Applicant's attorneys. Pursuant to 37 C.F.R. § 1.98(a)(2)(iv), and for the Examiner's review, Applicant has enclosed (1) copies of documents from the prosecution of related U.S. and non-U.S. patent applications, and (2) copies of non-U.S. patents or non-U.S. patent application publications. In accordance with 37 C.F.R. § 1.98(a)(2), copies of any cited U.S. patent or U.S. patent application publication documents are not enclosed.

Applicant has enclosed an English language abstract of any non-U.S. Patent or Patent Application which is written in a foreign language.

In accordance with 37 C.F.R. § 1.98(d), those documents which are marked with a double asterisk (**) next to the Cite No. in the attached form PTO/SB/08 are not supplied because they were previously cited by or submitted to the Office in prior application numbers 14/692,484 filed April 21, 2015, 16/017,334 filed June 25, 2018, and 16/588,02, filed 09-30-2019 and relied upon in this application for an earlier filing date under 35 U.S.C. 120.

Regarding the documents from the prosecution of related U.S. and non-U.S. patent applications, Applicant notes that 37 C.F.R. § 1.98(b) does not mention, and thus does not require, that Applicant provide any particular set of identifying information. While 37 C.F.R. § 1.98(a)(1) requires Applicant to provide a

REFLEX EXHIBIT 1013 - 359/432

list of such documents, it does not require Applicant to include in that list specific identifying information. 37 C.F.R. § 1.98(a)(2)(iv) further requires Applicant to provide a copy of such documents. Thus, the rules do not require that Applicant provide any particular set of information about these documents prior to the Examiner's consideration of all the cited information. Nevertheless, in order to be as helpful as possible, Applicant has provided (a) information regarding the source of the documents, and (b) a title or description of each document. Accordingly, in the list required by 37 C.F.R. § 1.98(a)(1), Applicant has identified the prosecution record of U.S. and non-U.S. patent applications as the source for each document. The information provided mirrors the requirements for cited U.S. and non-U.S. patent applications as set forth by 37 C.F.R. § 1.98(b).

Applicant respectfully requests consideration of all documents submitted in the present Information Disclosure Statement and List and entry into the record for the present application.

Applicant would like to bring to the Examiner's attention the existence of the following U.S patent applications.

INFORMATION DISCLOSURE STATEMENT for Application No. 16/588,026 (Attorney Docket No. 36362.0150U4) Disclosure of U.S. Patent Applications				
Examiner's Initials	**App. No. (Pub./Patent No.)**	**Filing Date (Pub./Issue Date)**	**1st Named Inventor (Applicant)**	**Attorney Docket No.**
	61/982,052	04/21/2014	Christopher L. Drenth	36362.0150U1-
	14/692,484 (10,047,581)	04/21/2015 (8/14/2018)	Christopher L. Drenth	36362.0150U2-
	16/017,334 (10,465,463)	06/25/2018 (11/5/2019)	Christopher L. Drenth	36362.0150U3
	16/588,026 (10,830,013)	09-30-2019 (11-10-2020)	Christopher L. Drenth	36362.0150U4

Applicants would like to bring to the Examiner's attention the existence of the following non-U.S. patent applications.

INFORMATION DISCLOSURE STATEMENT for Application No. 16/017,334 (Attorney Docket No. 36362.0150U3) Disclosure of Non-U.S. Patent Applications					
Examiner's Initials	**Country**	**Application No. (Publication No.)**	**Filing Date**	**1st Named Inventor (Applicant)**	**Attorney Docket No.**
	AU	2015249889	04/21/2015	Longyear TM, Inc.	36362.0150AU1

REFLEX EXHIBIT 1013 - 360/432

INFORMATION DISCLOSURE STATEMENT for Application No. 16/017,334 (Attorney Docket No. 36362.0150U3) Disclosure of Non-U.S. Patent Applications					
Examiner's Initials	**Country**	**Application No. (Publication No.)**	**Filing Date**	**1st Named Inventor (Applicant)**	**Attorney Docket No.**
	AU	2019257536 (AU 2015249889)	4/21/2015 (11/14/2019)	Longyear TM, Inc.	36362.0150AU2
	BR	BR112016024554.7	04/21/2015	Longyear TM, Inc.	36362.0150BR1
	CA	2946574	04/21/2015	Longyear TM, Inc.	36362.0150CA1
	CL	2016-002684	04/21/2015	Longyear TM, Inc.	36362.0150CL1
	CN	2015800211077	04/21/2015	Longyear TM, Inc.	36362.0150CN1
	EP	15782230.5 (EP 3134600)	04/21/2015 (9/4/2019)	Longyear TM, Inc.	36362.0150EP1
	EP	19188334.7	4/21/2015	Longyear TM, Inc.	36362.0150EP2
	PCT	PCT/US2015/026907 (WO2015/164394)	04/21/2015 (10/29/2015)	Longyear TM, Inc.	36362.0150P1-
	PE	2111-2016	04/21/2015	Longyear TM, Inc.	36362.0150PE1
	ZA	2016/07259	04/21/2015	Longyear TM, Inc.	36362.0150ZA1

Pursuant to 37 C.F.R. § 1.97(b)(3), Applicant submits that this document is timely filed in that the Patent and Trademark Office has not yet mailed to Applicant a first Office Action on the merits. Applicant submits that no fee is due; however, Applicant hereby authorizes the Commissioner to charge to Deposit Account No. 14-0629 any fee that may be required to effect the consideration and entry of this Information Disclosure Statement and List and the references contained therein.

Respectfully submitted,

Electronic signature: /Benjamin D. Kirk/
Benjamin D. Kirk
Registration No.: 74,848
BALLARD SPAHR LLP
Correspondence Customer Number: 23859

UNITED STATES PATENT AND TRADEMARK OFFICE

UNITED STATES DEPARTMENT OF COMMERCE
United States Patent and Trademark Office
Address: COMMISSIONER FOR PATENTS
P.O. Box 1450
Alexandria, Virginia 22313-1450
www.uspto.gov

APPLICATION NUMBER	FILING or 371(c) DATE	GRP ART UNIT	FIL FEE REC'D	ATTY.DOCKET.NO	TOT CLAIMS	IND CLAIMS
17/082,877	10/28/2020	3679	1820	36362.0150U5	2	1

CONFIRMATION NO. 1013

FILING RECEIPT

OC000000121378327

23859
BALLARD SPAHR LLP
SUITE 1600
999 PEACHTREE STREET
ATLANTA, GA 30309-4421

Date Mailed: 11/25/2020

Receipt is acknowledged of this non-provisional utility patent application. The application will be taken up for examination in due course. Applicant will be notified as to the results of the examination. Any correspondence concerning the application must include the following identification information: the U.S. APPLICATION NUMBER, FILING DATE, NAME OF FIRST INVENTOR, and TITLE OF INVENTION. Fees transmitted by check or draft are subject to collection.

Please verify the accuracy of the data presented on this receipt. If an error is noted on this Filing Receipt, please submit a written request for a corrected Filing Receipt, including a properly marked-up ADS showing the changes with strike-through for deletions and underlining for additions. If you received a "Notice to File Missing Parts" or other Notice requiring a response for this application, please submit any request for correction to this Filing Receipt with your reply to the Notice. When the USPTO processes the reply to the Notice, the USPTO will generate another Filing Receipt incorporating the requested corrections provided that the request is grantable.

Inventor(s)

CHRISTOPHER L. DRENTH, Burlington, CANADA;
Gordon Stewart, Claremont, AUSTRALIA;
Khaled Hejleh, Peppermint Grove, AUSTRALIA;

Applicant(s)

LONGYEAR TM, INC., Salt Lake City, UT;
GLOBALTECH CORPORATION PTY LTD, CANNING VALE, WA;

Power of Attorney: None

Domestic Priority data as claimed by applicant

This application is a CON of 16/588,026 09/30/2019 PAT 10830013
which is a CON of 16/017,334 06/25/2018 PAT 10465463
which is a CON of 14/692,484 04/21/2015 PAT 10047581
which claims benefit of 61/982,052 04/21/2014

Foreign Applications for which priority is claimed (You may be eligible to benefit from the **Patent Prosecution Highway** program at the USPTO. Please see http://www.uspto.gov for more information.) - None.
Foreign application information must be provided in an Application Data Sheet in order to constitute a claim to foreign priority. See 37 CFR 1.55 and 1.76.

Permission to Access Application via Priority Document Exchange: Yes

REFLEX EXHIBIT 1013 - 362/432

Permission to Access Search Results: Yes

Applicant may provide or rescind an authorization for access using Form PTO/SB/39 or Form PTO/SB/69 as appropriate.

If Required, Foreign Filing License Granted: 11/24/2020
The country code and number of your priority application, to be used for filing abroad under the Paris Convention, is **US 17/082,877**
Projected Publication Date: 03/04/2021
Non-Publication Request: No
Early Publication Request: No
Title

CORE BARREL HEAD ASSEMBLY WITH AN INTEGRATED SAMPLE ORIENTATION TOOL AND SYSTEM FOR USING SAME

Preliminary Class

175

Statement under 37 CFR 1.55 or 1.78 for AIA (First Inventor to File) Transition Applications: No

PROTECTING YOUR INVENTION OUTSIDE THE UNITED STATES

Since the rights granted by a U.S. patent extend only throughout the territory of the United States and have no effect in a foreign country, an inventor who wishes patent protection in another country must apply for a patent in a specific country or in regional patent offices. Applicants may wish to consider the filing of an international application under the Patent Cooperation Treaty (PCT). An international (PCT) application generally has the same effect as a regular national patent application in each PCT-member country. The PCT process **simplifies** the filing of patent applications on the same invention in member countries, but **does not result** in a grant of "an international patent" and does not eliminate the need of applicants to file additional documents and fees in countries where patent protection is desired.

Almost every country has its own patent law, and a person desiring a patent in a particular country must make an application for patent in that country in accordance with its particular laws. Since the laws of many countries differ in various respects from the patent law of the United States, applicants are advised to seek guidance from specific foreign countries to ensure that patent rights are not lost prematurely.

Applicants also are advised that in the case of inventions made in the United States, the Director of the USPTO must issue a license before applicants can apply for a patent in a foreign country. The filing of a U.S. patent application serves as a request for a foreign filing license. The application's filing receipt contains further information and guidance as to the status of applicant's license for foreign filing.

Applicants may wish to consult the USPTO booklet, "General Information Concerning Patents" (specifically, the section entitled "Treaties and Foreign Patents") for more information on timeframes and deadlines for filing foreign patent applications. The guide is available either by contacting the USPTO Contact Center at 800-786-9199, or it can be viewed on the USPTO website at http://www.uspto.gov/web/offices/pac/doc/general/index.html.

For information on preventing theft of your intellectual property (patents, trademarks and copyrights), you may wish to consult the U.S. Government website, http://www.stopfakes.gov. Part of a Department of Commerce initiative,

this website includes self-help "toolkits" giving innovators guidance on how to protect intellectual property in specific countries such as China, Korea and Mexico. For questions regarding patent enforcement issues, applicants may call the U.S. Government hotline at 1-866-999-HALT (1-866-999-4258).

LICENSE FOR FOREIGN FILING UNDER

Title 35, United States Code, Section 184

Title 37, Code of Federal Regulations, 5.11 & 5.15

GRANTED

The applicant has been granted a license under 35 U.S.C. 184, if the phrase "IF REQUIRED, FOREIGN FILING LICENSE GRANTED" followed by a date appears on this form. Such licenses are issued in all applications where the conditions for issuance of a license have been met, regardless of whether or not a license may be required as set forth in 37 CFR 5.15. The scope and limitations of this license are set forth in 37 CFR 5.15(a) unless an earlier license has been issued under 37 CFR 5.15(b). The license is subject to revocation upon written notification. The date indicated is the effective date of the license, unless an earlier license of similar scope has been granted under 37 CFR 5.13 or 5.14.

This license is to be retained by the licensee and may be used at any time on or after the effective date thereof unless it is revoked. This license is automatically transferred to any related applications(s) filed under 37 CFR 1.53(d). This license is not retroactive.

The grant of a license does not in any way lessen the responsibility of a licensee for the security of the subject matter as imposed by any Government contract or the provisions of existing laws relating to espionage and the national security or the export of technical data. Licensees should apprise themselves of current regulations especially with respect to certain countries, of other agencies, particularly the Office of Defense Trade Controls, Department of State (with respect to Arms, Munitions and Implements of War (22 CFR 121-128)); the Bureau of Industry and Security, Department of Commerce (15 CFR parts 730-774); the Office of Foreign AssetsControl, Department of Treasury (31 CFR Parts 500+) and the Department of Energy.

NOT GRANTED

No license under 35 U.S.C. 184 has been granted at this time, if the phrase "IF REQUIRED, FOREIGN FILING LICENSE GRANTED" DOES NOT appear on this form. Applicant may still petition for a license under 37 CFR 5.12, if a license is desired before the expiration of 6 months from the filing date of the application. If 6 months has lapsed from the filing date of this application and the licensee has not received any indication of a secrecy order under 35 U.S.C. 181, the licensee may foreign file the application pursuant to 37 CFR 5.15(b).

SelectUSA

The United States represents the largest, most dynamic marketplace in the world and is an unparalleled location for business investment, innovation, and commercialization of new technologies. The U.S. offers tremendous resources and advantages for those who invest and manufacture goods here. Through SelectUSA, our nation works to promote and facilitate business investment. SelectUSA provides information assistance to the international investor community; serves as an ombudsman for existing and potential investors; advocates on behalf of U.S. cities, states, and regions competing for global investment; and counsels U.S. economic development organizations on investment attraction best practices. To learn more about why the United States is the best country in the world to develop

technology, manufacture products, deliver services, and grow your business, visit http://www.SelectUSA.gov or call +1-202-482-6800.

PATENT APPLICATION FEE DETERMINATION RECORD

Substitute for Form PTO-875

Application or Docket Number
17/082,877

APPLICATION AS FILED - PART I

FOR	(Column 1) NUMBER FILED	(Column 2) NUMBER EXTRA	SMALL ENTITY RATE($)	SMALL ENTITY FEE($)	OR	OTHER THAN SMALL ENTITY RATE($)	OTHER THAN SMALL ENTITY FEE($)
BASIC FEE (37 CFR 1.16(a), (b), or (c))	N/A	N/A	N/A			N/A	320
SEARCH FEE (37 CFR 1.16(k), (i), or (m))	N/A	N/A	N/A			N/A	700
EXAMINATION FEE (37 CFR 1.16(o), (p), or (q))	N/A	N/A	N/A			N/A	800
TOTAL CLAIMS (37 CFR 1.16(i))	2 minus 20 =	*			OR	x 100 =	0.00
INDEPENDENT CLAIMS (37 CFR 1.16(h))	1 minus 3 =	*				x 480 =	0.00
APPLICATION SIZE FEE (37 CFR 1.16(s))	If the specification and drawings exceed 100 sheets of paper, the application size fee due is $310 ($155 for small entity) for each additional 50 sheets or fraction thereof. See 35 U.S.C. 41(a)(1)(G) and 37 CFR 1.16(s).						0.00
MULTIPLE DEPENDENT CLAIM PRESENT (37 CFR 1.16(j))							0.00
* If the difference in column 1 is less than zero, enter "0" in column 2.			TOTAL			TOTAL	1820

APPLICATION AS AMENDED - PART II

		(Column 1) CLAIMS REMAINING AFTER AMENDMENT		(Column 2) HIGHEST NUMBER PREVIOUSLY PAID FOR	(Column 3) PRESENT EXTRA	SMALL ENTITY RATE($)	SMALL ENTITY ADDITIONAL FEE($)	OR	OTHER THAN SMALL ENTITY RATE($)	OTHER THAN SMALL ENTITY ADDITIONAL FEE($)
AMENDMENT A	Total (37 CFR 1.16(i))	*	Minus	**	=	x =		OR	x =	
AMENDMENT A	Independent (37 CFR 1.16(h))	*	Minus	***	=	x =		OR	x =	
AMENDMENT A	Application Size Fee (37 CFR 1.16(s))									
AMENDMENT A	FIRST PRESENTATION OF MULTIPLE DEPENDENT CLAIM (37 CFR 1.16(j))							OR		
						TOTAL ADD'L FEE		OR	TOTAL ADD'L FEE	

		(Column 1) CLAIMS REMAINING AFTER AMENDMENT		(Column 2) HIGHEST NUMBER PREVIOUSLY PAID FOR	(Column 3) PRESENT EXTRA	RATE($)	ADDITIONAL FEE($)	OR	RATE($)	ADDITIONAL FEE($)
AMENDMENT B	Total (37 CFR 1.16(i))	*	Minus	**	=	x =		OR	x =	
AMENDMENT B	Independent (37 CFR 1.16(h))	*	Minus	***	=	x =		OR	x =	
AMENDMENT B	Application Size Fee (37 CFR 1.16(s))									
AMENDMENT B	FIRST PRESENTATION OF MULTIPLE DEPENDENT CLAIM (37 CFR 1.16(j))							OR		
						TOTAL ADD'L FEE		OR	TOTAL ADD'L FEE	

* If the entry in column 1 is less than the entry in column 2, write "0" in column 3.
** If the "Highest Number Previously Paid For" IN THIS SPACE is less than 20, enter "20".
*** If the "Highest Number Previously Paid For" IN THIS SPACE is less than 3, enter "3".
The "Highest Number Previously Paid For" (Total or Independent) is the highest found in the appropriate box in column 1.

ATTORNEY DOCKET NO. 36362.0150U5
PATENT
VIA EFS-WEB

IN THE UNITED STATES PATENT AND TRADEMARK OFFICE

In re Application of	)	
	)	
DRENTH et al.	)	Art Unit: Unassigned
	)	
Application No.: Unassigned	)	Examiner: Unassigned
	)	
Filing Date: October 28, 2020	)	Confirmation No.: Unassigned
	)	
FOR: **CORE BARREL HEAD ASSEMBLY WITH AN INTEGRATED SAMPLE ORIENTATION TOOL AND SYSTEM FOR USING SAME**	)	

AUTHORIZATION TO TREAT REPLY REQUIRING EXTENSION OF TIME AS INCORPORATING PETITION FOR EXTENSION OF TIME

Commissioner for Patents
P.O. Box 1450
Alexandria, VA 22313-1450

Ballard Spahr LLP
Customer Number 23859

Commissioner:

Pursuant to 37 C.F.R. §1.136(a)(3), the Commissioner is hereby requested and authorized to treat any concurrent or future reply in the above-identified application, requiring a petition for an extension of time for its timely submission, as incorporating a petition for extension of time for the appropriate length of time.

The Commissioner is hereby authorized to charge any fees which may be required, or credit any overpayment to Deposit Account No. 14-0629.

Respectfully submitted,

BALLARD SPAHR LLP

/Joseph P. Anderson III/
Joseph P. Anderson III
Registration No. 59,245

Ballard Spahr LLP
Customer Number 23859
(678) 420-9300 Phone
(678) 420-9301 Fax

In accordance with 37 C.F.R. § 1.8, I certify that this correspondence is being transmitted to the Commissioner for Patents, P.O. Box 1450, Alexandria, VA 22313-1450 via the USPTO's EFS-Web Electronic Filing System on October 28, 2020

/Joseph P. Anderson III/
Joseph P. Anderson, III – Reg. No. 59,245

Under the Paperwork Reduction Act of 1995, no persons are required to respond to a collection of information unless it contains a valid OMB control number.

Application Data Sheet 37 CFR 1.76	Attorney Docket Number	36362.0150U5
	Application Number	
Title of Invention	Core Barrel Head Assembly With An Integrated Sample Orientation Tool And System For Using Same	

The application data sheet is part of the provisional or nonprovisional application for which it is being submitted. The following form contains the bibliographic data arranged in a format specified by the United States Patent and Trademark Office as outlined in 37 CFR 1.76.
This document may be completed electronically and submitted to the Office in electronic format using the Electronic Filing System (EFS) or the document may be printed and included in a paper filed application.

Secrecy Order 37 CFR 5.2:

☐ Portions or all of the application associated with this Application Data Sheet may fall under a Secrecy Order pursuant to 37 CFR 5.2 (Paper filers only. Applications that fall under Secrecy Order may not be filed electronically.)

Inventor Information:

Inventor 1 Remove

Legal Name

Prefix	Given Name	Middle Name	Family Name	Suffix
	CHRISTOPHER	L.	DRENTH	

Residence Information (Select One) ○ US Residency ◉ Non US Residency ○ Active US Military Service

City	[illegible]	Country of Residence	A

Mailing Address of Inventor:

Address 1	2311 Hoover Court		
Address 2			
City	Burlington	**State/Province**	ON
Postal Code	L7P 4V2	**Country**	CA

Inventor 2 Remove

Legal Name

Prefix	Given Name	Middle Name	Family Name	Suffix
	GORDON		STEWART	

Residence Information (Select One) ○ US Residency ◉ Non US Residency ○ Active US Military Service

City	[illegible]	Country of Residence	

Mailing Address of Inventor:

Address 1	18 Airle Street		
Address 2			
City	Claremont	**State/Province**	
Postal Code	6010	**Country**	AU

Inventor 3 Remove

Legal Name

Under the Paperwork Reduction Act of 1995, no persons are required to respond to a collection of information unless it contains a valid OMB control number.

Application Data Sheet 37 CFR 1.76	Attorney Docket Number	36362.0150U5
	Application Number	
Title of Invention	Core Barrel Head Assembly With An Integrated Sample Orientation Tool And System For Using Same	

Prefix	Given Name	Middle Name	Family Name	Suffix
	KHALED		HEJLEH	

Residence Information (Select One) ○ US Residency ◉ Non US Residency ○ Active US Military Service

City	nn p r pmt	Country of Residence	

Mailing Address of Inventor:

Address 1	34A Leake Street		
Address 2			
City	Peppermint Grove	**State/Province**	
Postal Code	6011	**Country** i	AU

All Inventors Must Be Listed - Additional Inventor Information blocks may be generated within this form by selecting the **Add** button. Add

Correspondence Information:

Enter either Customer Number or complete the Correspondence Information section below. For further information see 37 CFR 1.33(a).

☐ **An Address is being provided for the correspondence Information of this application.**

Customer Number	23859		
Email Address	uspatentmail@ballardspahr.com	Add Email	Remove Email

Application Information:

Title of the Invention	Core Barrel Head Assembly With An Integrated Sample Orientation Tool And System For Using Same		
Attorney Docket Number	36362.0150U5	**Small Entity Status Claimed**	☐
Application Type	Nonprovisional		
Subject Matter	Utility		
Total Number of Drawing Sheets (if any)		**Suggested Figure for Publication (if any)**	

Filing By Reference:

l jwam njcrc rf gqqcargml u f cl dgjg e l nnjga rgml wpcdcpcl ac s l bcp13 S A /// a(l b 15 ADP / 35 (Bml mr am njcrc rf gqqcargml gd nnjga rgml n ncpqdgl ajs bdg e qncagdga rgml l b l wbp u gl eq pc cgl e dgjcb l wbm cqrga cl cdgr mpdchpcgel npgmpgwgl chp rgml s qr c npmt gbcb gl rf c nnpmmpg rc qcargml q(cjmu gc "Bm cqrga cl cdgr rgml j r ec l chp rgml " l b "Dmpcgel Npgmpgw l chp rgml "(

Dmprf c ns pnmqcqmd dgjg e b rc s l bcp15 ADP / 31 (rf c bcqapgnrgml l b l wbp u gl eqmdrf c npcqcl r nnjga rgml pc pcnj acb wrf gq pcdcpcl ac rmrf c npct gms qjwdgjcb nnjga rgml qs hcar rmaml bgqgml q l b pcos gc cl rqmd15 ADP / 35 (

nn a r ml l s cpmdrf c npct ms d cb nn a r ml	Dgg l e (	l r c car p ncpr r pr pA l r p

Under the Paperwork Reduction Act of 1995, no persons are required to respond to a collection of information unless it contains a valid OMB control number.

Application Data Sheet 37 CFR 1.76	Attorney Docket Number	36362.0150U5
	Application Number	
Title of Invention	Core Barrel Head Assembly With An Integrated Sample Orientation Tool And System For Using Same	

Publication Information:

☐ Request Early Publication (Fee required at time of Request 37 CFR 1.219)

☐ **Request Not to Publish.** I hereby request that the attached application not be published under 35 U.S.C. 122(b) and certify that the invention disclosed in the attached application **has not and will not** be the subject of an application filed in another country, or under a multilateral international agreement, that requires publication at eighteen months after filing.

Representative Information:

Representative information should be provided for all practitioners having a power of attorney in the application. Providing this information in the Application Data Sheet does not constitute a power of attorney in the application (see 37 CFR 1.32). Either enter Customer Number or complete the Representative Name section below. If both sections are completed the customer Number will be used for the Representative Information during processing.

Please Select One:	◉ Customer Number	○ US Patent Practitioner	○ Limited Recognition (37 CFR 11.9)
Customer Number	23859		

Domestic Benefit/National Stage Information:

This section allows for the applicant to either claim benefit under 35 U.S.C. 119(e), 120, 121, 365(c), or 386(c) or indicate National Stage entry from a PCT application. Providing benefit claim information in the Application Data Sheet constitutes the specific reference required by 35 U.S.C. 119(e) or 120, and 37 CFR 1.78.
When referring to the current application, please leave the "Application Number" field blank.

Prior Application Status	Pending		Remove
Application Number	Continuity Type	Prior Application Number	Filing or 371(c) Date (YYYY-MM-DD)
	Continuation of	16/588026	2019-09-30

Prior Application Status	Patented				Remove
Application Number	Continuity Type	Prior Application Number	Filing Date (YYYY-MM-DD)	Patent Number	Issue Date (YYYY-MM-DD)
16/588026	Continuation of	16/017334	2018-06-25	10465463	2019-11-05

Prior Application Status	Patented				Remove
Application Number	Continuity Type	Prior Application Number	Filing Date (YYYY-MM-DD)	Patent Number	Issue Date (YYYY-MM-DD)
16/017334	Continuation of	14/692484	2015-04-21	10047581	2018-08-14

Prior Application Status	Expired		Remove
Application Number	Continuity Type	Prior Application Number	Filing or 371(c) Date (YYYY-MM-DD)
14/692484	Claims benefit of provisional	61/982052	2014-04-21

Under the Paperwork Reduction Act of 1995, no persons are required to respond to a collection of information unless it contains a valid OMB control number.

Application Data Sheet 37 CFR 1.76	Attorney Docket Number	36362.0150U5
	Application Number	
Title of Invention	Core Barrel Head Assembly With An Integrated Sample Orientation Tool And System For Using Same	

Additional Domestic Benefit/National Stage Data may be generated within this form by selecting the **Add** button.

Foreign Priority Information:

This section allows for the applicant to claim priority to a foreign application. Providing this information in the application data sheet constitutes the claim for priority as required by 35 U.S.C. 119(b) and 37 CFR 1.55. When priority is claimed to a foreign application that is eligible for retrieval under the priority document exchange program (PDX)[i] the information will be used by the Office to automatically attempt retrieval pursuant to 37 CFR 1.55(i)(1) and (2). Under the PDX program, applicant bears the ultimate responsibility for ensuring that a copy of the foreign application is received by the Office from the participating foreign intellectual property office, or a certified copy of the foreign priority application is filed, within the time period specified in 37 CFR 1.55(g)(1).

Remove

Application Number	Country[i]	Filing Date (YYYY-MM-DD)	Access Code (if applicable)

Additional Foreign Priority Data may be generated within this form by selecting the **Add** button.

Statement under 37 CFR 1.55 or 1.78 for AIA (First Inventor to File) Transition Applications

☐ This application (1) claims priority to or the benefit of an application filed before March 16, 2013 and (2) also contains, or contained at any time, a claim to a claimed invention that has an effective filing date on or after March 16, 2013.
NOTE: By providing this statement under 37 CFR 1.55 or 1.78, this application, with a filing date on or after March 16, 2013, will be examined under the first inventor to file provisions of the AIA.

Application Data Sheet 37 CFR 1.76	Attorney Docket Number	36362.0150U5
	Application Number	
Title of Invention	Core Barrel Head Assembly With An Integrated Sample Orientation Tool And System For Using Same	

Authorization or Opt-Out of Authorization to Permit Access:

When this Application Data Sheet is properly signed and filed with the application, applicant has provided written authority to permit a participating foreign intellectual property (IP) office access to the instant application-as-filed (see paragraph A in subsection 1 below) and the European Patent Office (EPO) access to any search results from the instant application (see paragraph B in subsection 1 below).

Should applicant choose not to provide an authorization identified in subsection 1 below, applicant **must opt-out** of the authorization by checking the corresponding box A or B or both in subsection 2 below.

NOTE: This section of the Application Data Sheet is **ONLY** reviewed and processed with the **INITIAL** filing of an application. After the initial filing of an application, an Application Data Sheet cannot be used to provide or rescind authorization for access by a foreign IP office(s). Instead, Form PTO/SB/39 or PTO/SB/69 must be used as appropriate.

1. Authorization to Permit Access by a Foreign Intellectual Property Office(s)

A. Priority Document Exchange (PDX) - Unless box A in subsection 2 (opt-out of authorization) is checked, the undersigned hereby **grants the USPTO authority** to provide the European Patent Office (EPO), the Japan Patent Office (JPO), the Korean Intellectual Property Office (KIPO), the State Intellectual Property Office of the People's Republic of China (SIPO), the World Intellectual Property Organization (WIPO), and any other foreign intellectual property office participating with the USPTO in a bilateral or multilateral priority document exchange agreement in which a foreign application claiming priority to the instant patent application is filed, access to: (1) the instant patent application-as-filed and its related bibliographic data, (2) any foreign or domestic application to which priority or benefit is claimed by the instant application and its related bibliographic data, and (3) the date of filing of this Authorization. See 37 CFR 1.14(h)(1).

B. Search Results from U.S. Application to EPO - Unless box B in subsection 2 (opt-out of authorization) is checked, the undersigned hereby **grants the USPTO authority** to provide the EPO access to the bibliographic data and search results from the instant patent application when a European patent application claiming priority to the instant patent application is filed. See 37 CFR 1.14(h)(2).

The applicant is reminded that the EPO's Rule 141(1) EPC (European Patent Convention) requires applicants to submit a copy of search results from the instant application without delay in a European patent application that claims priority to the instant application.

2. Opt-Out of Authorizations to Permit Access by a Foreign Intellectual Property Office(s)

☐ A. Applicant **DOES NOT** authorize the USPTO to permit a participating foreign IP office access to the instant application-as-filed. If this box is checked, the USPTO will not be providing a participating foreign IP office with any documents and information identified in subsection 1A above.

☐ B. Applicant **DOES NOT** authorize the USPTO to transmit to the EPO any search results from the instant patent application. If this box is checked, the USPTO will not be providing the EPO with search results from the instant application.

NOTE: Once the application has published or is otherwise publicly available, the USPTO may provide access to the application in accordance with 37 CFR 1.14.

Under the Paperwork Reduction Act of 1995, no persons are required to respond to a collection of information unless it contains a valid OMB control number.

Application Data Sheet 37 CFR 1.76	Attorney Docket Number	36362.0150U5
	Application Number	
Title of Invention	Core Barrel Head Assembly With An Integrated Sample Orientation Tool And System For Using Same	

Applicant Information:

Providing assignment information in this section does not substitute for compliance with any requirement of part 3 of Title 37 of CFR to have an assignment recorded by the Office.

Applicant 1

If the applicant is the inventor (or the remaining joint inventor or inventors under 37 CFR 1.45), this section should not be completed. The information to be provided in this section is the name and address of the legal representative who is the applicant under 37 CFR 1.43; or the name and address of the assignee, person to whom the inventor is under an obligation to assign the invention, or person who otherwise shows sufficient proprietary interest in the matter who is the applicant under 37 CFR 1.46. If the applicant is an applicant under 37 CFR 1.46 (assignee, person to whom the inventor is obligated to assign, or person who otherwise shows sufficient proprietary interest) together with one or more joint inventors, then the joint inventor or inventors who are also the applicant should be identified in this section.

Clear

◉ ge	○ Legal Representative under 35 U.S.C. 117	○ Joint Inventor
○ ml rm m r gt l rm g m ge r b rm gel	○ Person who shows sufficient proprietary interest	

f applicant is the legal representative, indicate the authority to file the patent application, the inventor is:

Name of the Deceased or Legally Incapacitated Inventor:

If the Applicant is an Organization check here. ☒

Organization Name	LONGYEAR TM, INC.

Mailing Address Information For Applicant:

Address 1	2455 S. 3600 W.		
Address 2			
City	SALT LAKE CITY	**State/Province**	UT
Country	US	Postal Code	84119
Phone Number		Fax Number	
Email Address			

Additional Applicant Data may be generated within this form by selecting the Add button.

Under the Paperwork Reduction Act of 1995, no persons are required to respond to a collection of information unless it contains a valid OMB control number.

Application Data Sheet 37 CFR 1.76	Attorney Docket Number	36362.0150U5
	Application Number	
Title of Invention	Core Barrel Head Assembly With An Integrated Sample Orientation Tool And System For Using Same	

Applicant 2

If the applicant is the inventor (or the remaining joint inventor or inventors under 37 CFR 1.45), this section should not be completed. The information to be provided in this section is the name and address of the legal representative who is the applicant under 37 CFR 1.43; or the name and address of the assignee, person to whom the inventor is under an obligation to assign the invention, or person who otherwise shows sufficient proprietary interest in the matter who is the applicant under 37 CFR 1.46. If the applicant is an applicant under 37 CFR 1.46 (assignee, person to whom the inventor is obligated to assign, or person who otherwise shows sufficient proprietary interest) together with one or more joint inventors, then the joint inventor or inventors who are also the applicant should be identified in this section.

Clear

◉ ge	○ Legal Representative under 35 U.S.C. 117	○ Joint Inventor
○ ml rm m r gjt l rm g m ge r b rm gel	○ Person who shows sufficient proprietary interest	

f applicant is the legal representative, indicate the authority to file the patent application, the inventor is:

Name of the Deceased or Legally Incapacitated Inventor:

If the Applicant is an Organization check here. ☒

Organization Name	GLOBALTECH CORPORATION PTY LTD		
Mailing Address Information For Applicant:			
Address 1	ABN 18 087 281 418 OF 1/48		
Address 2	VINNICOMBE DRIVE		
City	CANNING VALE	**State/Province**	WA
Country	AU	Postal Code	6155
Phone Number		Fax Number	
Email Address			

Additional Applicant Data may be generated within this form by selecting the Add button.

Applicant 3

If the applicant is the inventor (or the remaining joint inventor or inventors under 37 CFR 1.45), this section should not be completed. The information to be provided in this section is the name and address of the legal representative who is the applicant under 37 CFR 1.43; or the name and address of the assignee, person to whom the inventor is under an obligation to assign the invention, or person who otherwise shows sufficient proprietary interest in the matter who is the applicant under 37 CFR 1.46. If the applicant is an applicant under 37 CFR 1.46 (assignee, person to whom the inventor is obligated to assign, or person who otherwise shows sufficient proprietary interest) together with one or more joint inventors, then the joint inventor or inventors who are also the applicant should be identified in this section.

Clear

○ ge	○ Legal Representative under 35 U.S.C. 117	○ Joint Inventor
○ ml rm m r gjt l rm g m ge r b rm gel	○ Person who shows sufficient proprietary interest	

f applicant is the legal representative, indicate the authority to file the patent application, the inventor is:

Name of the Deceased or Legally Incapacitated Inventor:

Under the Paperwork Reduction Act of 1995, no persons are required to respond to a collection of information unless it contains a valid OMB control number.

Application Data Sheet 37 CFR 1.76	Attorney Docket Number	36362.0150U5
	Application Number	
Title of Invention	Core Barrel Head Assembly With An Integrated Sample Orientation Tool And System For Using Same	

If the Applicant is an Organization check here. ☐

Prefix	**Given Name**	Middle Name	**Family Name**	Suffix

Mailing Address Information For Applicant:			
Address 1			
Address 2			
City		**State/Province**	
Country		Postal Code	
Phone Number		Fax Number	
Email Address			

Additional Applicant Data may be generated within this form by selecting the Add button.

Assignee Information including Non-Applicant Assignee Information:

Providing assignment information in this section does not substitute for compliance with any requirement of part 3 of Title 37 of CFR to have an assignment recorded by the Office.

Assignee 1

Complete this section if assignee information, including non-applicant assignee information, is desired to be included on the patent application publication. An assignee-applicant identified in the "Applicant Information" section will appear on the patent application publication as an applicant. For an assignee-applicant, complete this section only if identification as an assignee is also desired on the patent application publication.

If the Assignee or Non-Applicant Assignee is an Organization check here. ☐

Prefix	**Given Name**	Middle Name	**Family Name**	Suffix

Under the Paperwork Reduction Act of 1995, no persons are required to respond to a collection of information unless it contains a valid OMB control number.

Application Data Sheet 37 CFR 1.76	Attorney Docket Number	36362.0150U5
	Application Number	
Title of Invention	Core Barrel Head Assembly With An Integrated Sample Orientation Tool And System For Using Same	

Mailing Address Information For Assignee including Non-Applicant Assignee:			
Address 1			
Address 2			
City		**State/Province**	
Country		Postal Code	
Phone Number		Fax Number	
Email Address			
Additional Assignee or Non-Applicant Assignee Data may be generated within this form by selecting the Add button.			

Signature:

NOTE: This Application Data Sheet must be signed in accordance with 37 CFR 1.33(b). **However, if this Application Data Sheet is submitted with the INITIAL filing of the application and either box A or B is not checked in subsection 2 of the "Authorization or Opt-Out of Authorization to Permit Access" section, then this form must also be signed in accordance with 37 CFR 1.14(c).**

This Application Data Sheet **must** be signed by a patent practitioner if one or more of the applicants is a **juristic entity** (e.g., corporation or association). If the applicant is two or more joint inventors, this form must be signed by a patent practitioner, **all** joint inventors who are the applicant, or one or more joint inventor-applicants who have been given power of attorney (e.g., see USPTO Form PTO/AIA/81) on behalf of **all** joint inventor-applicants.

See 37 CFR 1.4(d) for the manner of making signatures and certifications.

Signature	/Joseph P. Anderson III/			Date (YYYY-MM-DD)	2020-10-28
First Name	Joseph	Last Name	Anderson III	Registration Number	59245
Additional Signature may be generated within this form by selecting the Add button.					

This collection of information is required by 37 CFR 1.76. The information is required to obtain or retain a benefit by the public which is to file (and by the USPTO to process) an application. Confidentiality is governed by 35 U.S.C. 122 and 37 CFR 1.14. This collection is estimated to take 23 minutes to complete, including gathering, preparing, and submitting the completed application data sheet form to the USPTO. Time will vary depending upon the individual case. Any comments on the amount of time you require to complete this form and/or suggestions for reducing this burden, should be sent to the Chief Information Officer, U.S. Patent and Trademark Office, U.S. Department of Commerce, P.O. Box 1450, Alexandria, VA 22313-1450. DO NOT SEND FEES OR COMPLETED FORMS TO THIS ADDRESS. **SEND TO: Commissioner for Patents, P.O. Box 1450, Alexandria, VA 22313-1450.**

Privacy Act Statement

Rf c Npgt aw ar md/752 'N-J-71,357(pcos gpcqrf r wms c eg cl acpr gl gl chmk rgml gl aml l cargml u gf wms pcqs k gpqgml mdrf c rr af cb chmk pcj rcb rm n rcl r nnjga rgml mpn rcl r- aampbqgl ejw ns pqs l r rmrf c pcos gpck cl rq mdrf c ar njc qc c bt gpcb rf r8'/(rf c ecl cp j s rf mpgwchmprf c amjjcargml mdrf gq gl chmk rgml gq 13 S- -A-0' ('0(9'0(cs pl gqf gl e mdrf c gl chmk rgml qmjgagrcb gq t mjs l r pv9 l b '1(rf c npgl agn j ns pnmqc chmpu f gaf rf c gl chmk rgml gq s qcb wrf c S- -N rcl r l b Rp bck pi Mdbgac gq rmnpmacqq l b mpcv k gl c wms pcqs k gpqgml pcj rcb rm n rcl r nnjga rgml mpn rcl r- Glwms bml mr cs pl gqf rf c pcos cqrcb gl chmk rgml rf c S- -N rcl r l b Rp bck pi Mdbgac k wl mr c jc rmnpmacqq l b mpcv k gl c wms pcqs k gpqgml u f gaf k wpcqs jr gl rcpk gl rgml mdnpmaccbgl eq mp l bml k cl r md rf c nnjga rgml mpcvngp rgml mdrf c n rcl r-

Rf c gl chmk rgml npmt gpcb wwms gl rf gq chmk u gjj c qs hcar rmrf c chrjjmu gl e pms rgl c s qc qs

/ Rf c gl chmk rgml ml rf gq chmk u gjj c rpc rcb aml cbpcl rg jjwrmrf c cvrcl r jjmu cb s l bc prf c Dpccbmk mdGchmk rgml ar '3 S- -A-330(l b rf c Npgt aw ar '3 S- -A-330 (- Pcampbqchmk rf gq qvqrck mdpcampbqk w c bgpajmqcb rmrf c B cn prk cl r md s qrgac rmbcrcpk gl c u f crf c prf c Dpccbmk md Gchmk rgml ar pcos gpcqbgpajmqs pc mdrf c qc pcampbq-

0- pcampb chmk rf gq qvqrck mdpcampbqk w c bgpajmqcb q pms rgl c s qc gl rf c ams pqc mdnpcqcl rgl e ct gpcl ac rm ams pr k egqrp rc mp bk gl gqrp rgl c rpg s l j gl ajs bgl e bgpajmqs pcq rmmmnmqgl e ams l qcj gl rf c ams pqc mdqcrrjck cl r l ce mrg rgml q-

1 pcampb gl rf gq qvqrck mdpcampbqk w c bgpajmqcb q pms rgl c s qc rm ck cpmdAml e pcqqcqs k grgl e pcos cqr gl t mjt gl e l gl bgl gbs j rmu f mk rf c pcampb ncpr gl q u f cl rf c gl bgl gbs j f q pcos cqrcb qqgqr l ac chmk rf c ck cpu gf pcqncar rmrf c qs hcar k rrc pmdrf c pcampb-

2- pcampb gl rf gq qvqrck mdpcampbqk w c bgpajmqcb q pms rgl c s qc rm aml rp ar mpmdrf c ec l awf t gl e l ccb chmprf c gl chmk rgml gl mpbcprmnncpchmk aml rp ar- Pcagngcl rq mdgl chmk rgml qf jj c pcos gpcb rmamk njwu gf rf c pcos gpck cl rq mdrf c Npgt aw ar md/752 q k cl bcb ns pqs l r rm3 S- -A-330 'k (-

3- pcampb pcj rcb rm l Grcpl rgml j nnjga rgml qbjcb s l bc prf c N rcl r Ammncp rgml Rpc rwgl rf gq qvqrck mdpcampbqk w c bgpajmqcb q pms rgl c s qc rmrf c Grcpl rgml j s pc s mdrf c U mjb Grcjjcars j Npmncprw Mpe l gx rgml ns pqs l r rmrf c N rcl r Ammncp rgml Rpc rw-

4- pcampb gl rf gq qvqrck mdpcampbqk w c bgpajmqcb q pms rgl c s qc rm l mrf c pdcbcp j ec l awchmpns pnmqcq mdL rgml j cas pgwpct gcu '13 S- -A-/6/(l b chmpct gcu ns pqs l r rmrf c rmk ga Cl cpew ar '20 S- -A-0/6'a((-

5- pcampb chmk rf gq qvqrck mdpcampbqk w c bgpajmqcb q pms rgl c s qc rmrf c bk gl gqrp rmp E cl cp j c pt gacq mpf gq f c pbcqgel cc bs pgl e l gl qncargml mdpcampbqaml bs arcb wE qn pr mdrf r ec l awq pcqnml cg gigwrmpcamk k cl b gk npmt ck cl rq gl pcampbqk l eck cl r np argacq l b npmep k q s l bcp s rf mpgwmd22 S- -A-07. 2 l b 07. 4- s af bgpajmqs pc qf jj c k bc gl aampb l ac u gf rf c E pcesj rgml qemt cpl gl e gl qncargml md pcampbqchmprf gq ns pnmqc l b l wmrf c pcqct l r 'gc- E mpAmk k c pac(bgpcargl c- s af bgpajmqs pc qf jj l mr c s qcb rmk i c bcrcpk gl rgml q ms r gl bgl gbs jq-

6- pcampb chmk rf gq qvqrck mdpcampbqk w c bgpajmqcb q pms rgl c s qc rmrf c ns jga chcpcgf c pns jga rgml mdrf c nnjga rgml ns pqs l r rm13 S- -A-/00' (mpgqqs l ac md n rcl r ns pqs l r rm13 S- -A-/3/- Ds prf c p pcampb k w c bgpajmqcb qs hcar rmrf c jgk gr rgml q md15 ADP/-/2 q pms rgl c s qc rmrf c ns jga gl rf c pcampb u q bjcb gl l nnjga rgml u f gaf ca k c l bml cb mpgl u f gaf rf c npmaccbgl e qu c pc rcpk gl rcb l b u f gaf nnjga rgml gq pcdcpcl ac b wcgf c p ns jgqf c b nnjga rgml l nnjga rgml mncl rmns jga gl qncargml q mp l gqqs cb n rcl r-

7- pcampb chmk rf gq qvqrck mdpcampbqk w c bgpajmqcb q pms rgl c s qc rm Dcbcp j r rc mpjma j j u cl chmack cl r ec l aw gl rf c S NRM camk cq u pc md t gqrj rgml mpnmrcl rg j t gqrj rgml mdj u mpqcesj rgml -

PTO/AIA/01 (08-12)
Approved for use through 01/31/2014. OMB 0651-0032
U.S. Patent and Trademark Office; U.S. DEPARTMENT OF COMMERCE
Under the Paperwork Reduction Act of 1995, no persons are required to respond to a collection of information unless it displays a valid OMB control number.

DECLARATION (37 CFR 1.63) FOR UTILITY OR DESIGN APPLICATION USING AN APPLICATION DATA SHEET (37 CFR 1.76)

Title of Invention	CORE BARREL HEAD ASSEMBLY WITH AN INTEGRATED SAMPLE ORIENTATION TOOL AND SYSTEM FOR USING SAME

As the below named inventor, I hereby declare that:

This declaration is directed to:

☐ The attached application, or

▩ United States application or PCT international application number 14/692,484 filed on April 21, 2015.

The above-identified application was made or authorized to be made by me.

I believe that I am the original inventor or an original joint inventor of a claimed invention in the application.

I hereby acknowledge that any willful false statement made in this declaration is punishable under 18 U.S.C. 1001 by fine or imprisonment of not more than five (5) years, or both.

WARNING:

Petitioner/applicant is cautioned to avoid submitting personal information in documents filed in a patent application that may contribute to identity theft. Personal information such as social security numbers, bank account numbers, or credit card numbers (other than a check or credit card authorization form PTO-2038 submitted for payment purposes) is never required by the USPTO to support a petition or an application. If this type of personal information is included in documents submitted to the USPTO, petitioners/applicants should consider redacting such personal information from the documents before submitting them to the USPTO. Petitioner/applicant is advised that the record of a patent application is available to the public after publication of the application (unless a non-publication request in compliance with 37 CFR 1.213(a) is made in the application) or issuance of a patent. Furthermore, the record from an abandoned application may also be available to the public if the application is referenced in a published application or an issued patent (see 37 CFR 1.14). Checks and credit card authorization forms PTO-2038 submitted for payment purposes are not retained in the application file and therefore are not publicly available.

LEGAL NAME OF INVENTOR

Inventor: Christopher L. Drenth Date (Optional): May 13, 2015

Signature:

Note: An application data sheet (PTO/SB/14 or equivalent), including naming the entire inventive entity, must accompany this form or must have been previously filed. Use an additional PTO/AIA/01 form for each additional inventor.

This collection of information is required by 35 U.S.C. 115 and 37 CFR 1.63. The information is required to obtain or retain a benefit by the public which is to file (and by the USPTO to process) an application. Confidentiality is governed by 35 U.S.C. 122 and 37 CFR 1.11 and 1.14. This collection is estimated to take 1 minute to complete, including gathering, preparing, and submitting the completed application form to the USPTO. Time will vary depending upon the individual case. Any comments on the amount of time you require to complete this form and/or suggestions for reducing this burden, should be sent to the Chief Information Officer, U.S. Patent and Trademark Office, U.S. Department of Commerce, P.O. Box 1450, Alexandria, VA 22313-1450. DO NOT SEND FEES OR COMPLETED FORMS TO THIS ADDRESS. SEND TO: Commissioner for Patents, P.O. Box 1450, Alexandria, VA 22313-1450.

If you need assistance in completing the form, call 1-800-PTO-9199 and select option 2.

PTO/AIA/01 (08-12)
Approved for use through 01/31/2014. OMB 0651-0032
U.S. Patent and Trademark Office; U.S. DEPARTMENT OF COMMERCE
Under the Paperwork Reduction Act of 1995, no persons are required to respond to a collection of information unless it displays a valid OMB control number.

DECLARATION (37 CFR 1.63) FOR UTILITY OR DESIGN APPLICATION USING AN APPLICATION DATA SHEET (37 CFR 1.76)

Title of Invention	CORE BARREL HEAD ASSEMBLY WITH AN INTEGRATED SAMPLE ORIENTATION TOOL AND SYSTEM FOR USING SAME

As the below named inventor, I hereby declare that:

This declaration is directed to:

☐ The attached application, or

☒ United States application or PCT international application number 14/692,484 filed on April 21, 2015.

The above-identified application was made or authorized to be made by me.

I believe that I am the original inventor or an original joint inventor of a claimed invention in the application.

I hereby acknowledge that any willful false statement made in this declaration is punishable under 18 U.S.C. 1001 by fine or imprisonment of not more than five (5) years, or both.

WARNING:

Petitioner/applicant is cautioned to avoid submitting personal information in documents filed in a patent application that may contribute to identity theft. Personal information such as social security numbers, bank account numbers, or credit card numbers (other than a check or credit card authorization form PTO-2038 submitted for payment purposes) is never required by the USPTO to support a petition or an application. If this type of personal information is included in documents submitted to the USPTO, petitioners/applicants should consider redacting such personal information from the documents before submitting them to the USPTO. Petitioner/applicant is advised that the record of a patent application is available to the public after publication of the application (unless a non-publication request in compliance with 37 CFR 1.213(a) is made in the application) or issuance of a patent. Furthermore, the record from an abandoned application may also be available to the public if the application is referenced in a published application or an issued patent (see 37 CFR 1.14). Checks and credit card authorization forms PTO-2038 submitted for payment purposes are not retained in the application file and therefore are not publicly available.

LEGAL NAME OF INVENTOR

Inventor: Gordon Stewart Date (Optional): 10/7/15

Signature: [signature]

Note: An application data sheet (PTO/SB/14 or equivalent), including naming the entire inventive entity, must accompany this form or must have been previously filed. Use an additional PTO/AIA/01 form for each additional inventor.

This collection of information is required by 35 U.S.C. 115 and 37 CFR 1.63. The information is required to obtain or retain a benefit by the public which is to file (and by the USPTO to process) an application. Confidentiality is governed by 35 U.S.C. 122 and 37 CFR 1.11 and 1.14. This collection is estimated to take 1 minute to complete, including gathering, preparing, and submitting the completed application form to the USPTO. Time will vary depending upon the individual case. Any comments on the amount of time you require to complete this form and/or suggestions for reducing this burden, should be sent to the Chief Information Officer, U.S. Patent and Trademark Office, U.S. Department of Commerce, P.O. Box 1450, Alexandria, VA 22313-1450. DO NOT SEND FEES OR COMPLETED FORMS TO THIS ADDRESS. SEND TO: Commissioner for Patents, P.O. Box 1450, Alexandria, VA 22313-1450.

If you need assistance in completing the form, call 1-800-PTO-9199 and select option 2

PTO/AIA/01 (06-12)
Approved for use through 01/31/2014. OMB 0651-0032
U.S. Patent and Trademark Office; U.S. DEPARTMENT OF COMMERCE
Under the Paperwork Reduction Act of 1995, no persons are required to respond to a collection of information unless it displays a valid OMB control number.

DECLARATION (37 CFR 1.63) FOR UTILITY OR DESIGN APPLICATION USING AN APPLICATION DATA SHEET (37 CFR 1.76)

Title of Invention	CORE BARREL HEAD ASSEMBLY WITH AN INTEGRATED SAMPLE ORIENTATION TOOL AND SYSTEM FOR USING SAME

As the below named inventor, I hereby declare that:

This declaration is directed to:

☐ The attached application, or

☒ United States application or PCT international application number 14/692,484 filed on April 21, 2015.

The above-identified application was made or authorized to be made by me.

I believe that I am the original inventor or an original joint inventor of a claimed invention in the application.

I hereby acknowledge that any willful false statement made in this declaration is punishable under 18 U.S.C. 1001 by fine or imprisonment of not more than five (5) years, or both.

WARNING:

Petitioner/applicant is cautioned to avoid submitting personal information in documents filed in a patent application that may contribute to identity theft. Personal information such as social security numbers, bank account numbers, or credit card numbers (other than a check or credit card authorization form PTO-2038 submitted for payment purposes) is never required by the USPTO to support a petition or an application. If this type of personal information is included in documents submitted to the USPTO, petitioners/applicants should consider redacting such personal information from the documents before submitting them to the USPTO. Petitioner/applicant is advised that the record of a patent application is available to the public after publication of the application (unless a non-publication request in compliance with 37 CFR 1.213(a) is made in the application) or issuance of a patent. Furthermore, the record from an abandoned application may also be available to the public if the application is referenced in a published application or an issued patent (see 37 CFR 1.14). Checks and credit card authorization forms PTO-2038 submitted for payment purposes are not retained in the application file and therefore are not publicly available.

LEGAL NAME OF INVENTOR

Inventor: Khaled Hejleh Date (Optional) :

Signature:

Note: An application data sheet (PTO/SB/14 or equivalent), including naming the entire inventive entity, must accompany this form or must have been previously filed. Use an additional PTO/AIA/01 form for each additional inventor.

This collection of information is required by 35 U.S.C. 115 and 37 CFR 1.63. The information is required to obtain or retain a benefit by the public which is to file (and by the USPTO to process) an application. Confidentiality is governed by 35 U.S.C. 122 and 37 CFR 1.11 and 1.14. This collection is estimated to take 1 minute to complete, including gathering, preparing, and submitting the completed application form to the USPTO. Time will vary depending upon the individual case. Any comments on the amount of time you require to complete this form and/or suggestions for reducing this burden, should be sent to the Chief Information Officer, U.S. Patent and Trademark Office, U.S. Department of Commerce, P.O. Box 1450, Alexandria, VA 22313-1450. DO NOT SEND FEES OR COMPLETED FORMS TO THIS ADDRESS. SEND TO: Commissioner for Patents, P.O. Box 1450, Alexandria, VA 22313-1450.

If you need assistance in completing the form, call 1-800-PTO-9199 and select option 2.

ABSTRACT

A core barrel head assembly having at least one electronic instrument that is configured to obtain orientation data; a power source; and a communication means to receive and/or transmit orientation data for use in a core sample down hole surveying and sample orientation system that is configured to provide an indication of the orientation of a core sample relative to a body of material from which the core has been extracted, and also to a method of core sample orientation identification..

What is claimed is:

1. A core barrel head assembly having an exterior surface and comprising:

a first interior cavity;

a sealed interior cavity spaced distally from the first interior cavity and having a closed proximal end;

a threaded proximal end portion for coupling to a wire line retrieval portion of a head assembly, wherein the first interior cavity extends distally from the threaded proximal end portion;

a window that extends from the exterior surface into optical communication with the sealed interior cavity;

at least one electronic instrument that is configured to obtain core orientation data, wherein the at least one electronic instrument comprises at least one digital and/or electro-mechanical sensor in a core orientation data recording tool; and

a transmitter configured to transmit core orientation data,

wherein the sealed interior cavity is sized and shaped to enclose the at least one electronic instrument.

2. The core barrel head assembly of claim 1, further comprising:

a base portion, wherein the first interior cavity extends distally from the threaded proximal end portion to the base portion;

a port positioned proximate the base portion and extending from the exterior surface into fluid communication with the first interior cavity;

a power source in operable communication with the at least one electronic instrument, wherein the power source is mounted therein the interior cavity;

an open and threaded distal end portion, wherein the sealed interior cavity extends distally to the open and threaded distal end portion of the core barrel head assembly; and

a check valve assembly configured to affect a hermetical seal of the sealed interior cavity and to provide fluid control for wire line operation.

REFLEX EXHIBIT 1013 - 383/432

CORE BARREL HEAD ASSEMBLY WITH AN INTEGRATED SAMPLE ORIENTATION TOOL AND SYSTEM FOR USING SAME

CROSS REFERENCE TO RELATED PATENT APPLICATION

[0001] This application is a continuation of U.S. Patent Application No. 16/588,026, filed September 30, 2019, which is a continuation of U.S. Patent Application No. 16/017,334, filed June 25, 2018, which is now U.S. Patent No. 10,465,463, which is a continuation of U.S. Patent Application No. 14/692,484, filed on April 21, 2015, which is now U.S. Patent No. 10,047,581, which claims priority to U.S. Provisional Application No. 61/982,052, filed on April 21, 2014. Each of these applications is incorporated herein by reference in its entirety.

FIELD OF THE INVENTION

[0002] The present invention relates to down hole surveying in drilling operations. More particularly, to a core barrel assembly having at least one electronic instrument that is configured for use in a core sample down hole surveying and sample orientation system. In one example, the at least one electronic instrument is configured to provide an indication of the orientation of a core sample relative to a body of material from which the core has been extracted, and also to a method of core sample orientation identification.

BACKGROUND

[0003] Conventionally, core samples are obtained through the use of core drilling systems that comprise outer and inner tube assemblies. In operation, a cutting head is attached to the outer tube assembly so that rotational torque applied to the outer tube assembly can be transmitted to the cutting head. A core is generated during the drilling operation, with the core progressively extending along the elongate axis of the inner tube assembly as drilling progresses. Typically, when a core sample is acquired, the core within the inner tube assembly is fractured and the inner tube assembly and the fractured core sample contained therein are then retrieved from within the drill hole, typically by way of a retrieval cable lowered down the drill hole. Once the inner tube

assembly has been brought to ground surface, the core sample can be removed and subjected to the desired analysis.

[0004] It is desirable for analysis purposes to have an indication of the orientation of the core sample relative to the ground from which it was extracted. This is complicated in that it is common to drill at an angle relative to the vertical. For efficiency and accuracy of the mineralogical record, it is desirable to determine the orientation and survey position of each core's position underground before being drilled out and extracted. Such orientation and survey positions allow for the subsequent production of a three dimensional map of underground mineral/rock content.

[0005] One common way of obtaining an indication of the orientation of a core sample is through use of an orientation spear comprising a marker (such as a crayon) projecting from one end of a thin steel shank, the other end of which is attached to a wire line. The orientation spear is lowered down the drill hole, prior to the inner tube assembly being introduced. The marker on the orientation spear strikes the facing surface of material from which the core is to be generated, leaving a mark thereon. Because of gravity, the mark is on the lower side of the drill hole. The inner tube assembly is then introduced into the outer tube assembly in the drill hole. As drilling proceeds, a core sample is generated within the inner tube assembly. The core sample so generated carries the mark which was previously applied. Upon completion of the core drilling run and retrieval of the core sample, the mark provides an indication of the orientation of the core sample at the time it was in the ground.

[0006] Other conventional technologies use core orientation units attached to core inner tubes and back-end assemblies to determine the correct orientation of the drilled out core sample after a preferred predetermined drilling distance intervals during drilling. These core orientation units typically measure rotational direction of the core sample before extraction. On retrieval at the surface of the hole, the rotational direction can be determined by electronic means and the upper or lower side of the core material physically 'marked' for later identification by geologists.

[0007] Coupled with the core orientation system, a survey instrument is conventionally used. In this technique, at periodic depths, the survey instrument is lowered down the drill hole to determine azimuth (angular measurement relative to a

reference point or direction), dip (or inclination) and any other required survey parameters. These periodic depth survey readings are used to approximate the drill-path at different depths. Together with the rotational position of the extracted core (from the core orientation device), the three dimensional subsurface material content map can be determined.

[0008] It has been found desirable to provide an improved core barrel assembly having an integrated sample orientation subassembly and method for using same that is configured for use in a core sample down hole surveying and sample orientation that minimizes the need to add additional drill string elements, which allows for increased efficiency and speed of drilling.

SUMMARY

[0009] In one aspect, the present invention provides a core barrel head assembly having an elongate tube body that defines a selectively sealed interior cavity. The core barrel head assembly can have at least one electronic instrument positioned in the interior cavity that is configured to obtain core orientation data of a core sample and a power source positioned in the interior cavity and in electrical communication with the at least one electronic instrument. The core barrel head assembly can also have a communication means that is configured to receive and/or transmit orientation data for use in a core sample down hole surveying and/or sample orientation system. The derived core orientation data provides an indication of the orientation of the core sample relative to a body of material from which the core has been extracted, and also to a method of using same.

[0010] The core barrel head assembly is configured for connection to tube portions of a drill string via respective connection means. In another aspect, the at least one electronic instrument of the core barrel head assembly can be mounted, for example and without limitation, within the interior cavity defined the body, within an interior cavity that is defined therein a side wall of the body of the core barrel head assembly, or potted or in sealed contact with a portion of a side wall of the core barrel assembly (on either an exterior surface or an interior surface of a cavity defined therein the body). As one skilled in the art will contemplate, the core barrel head assembly can comprise at

least one electronic instrument that is configured to obtain orientation data, an electrically coupled power source and communication means to receive and/or transmit orientation data.

[0011] In another aspect, the communication means can comprise a wireless communication means that is configured to wirelessly receive and/or transmit survey data. Optionally, the communication means can be configured to communicate one way or two ways with each other, when drilling has ceased or during drilling.

[0012] In one aspect, the at least one electronic instrument of the core barrel head assembly advantageously enables obtaining drill hole survey readings without the need to insert unwieldy extension drill rods and/or a survey probe to measure azimuth and inclination/dip of the drill hole path. This results in a reduction of equipment handling and usage of equipment, a reduction of operations by not needing to periodically withdraw the drill bit a certain distance in order to advance a survey probe ahead of, and therefore distanced from, the drill bit, with a resultant increase in operational efficiency.

[0013] Another aspect of the present invention provides a method of conducting a down hole survey of drilling, the method including: a) drilling the core from a subsurface body of material; b) recording data relating to orientation of the core to be retrieved, the data recorded using the at least one electronic instrument of the core barrel head assembly, c) separating the core from the subsurface body, and d) obtaining an indication of the orientation of the core based on the recorded core orientation data obtained before the core was separated from the subsurface body.

[0014] Optionally, the method can comprise: determining that drilling has ceased for a period of time, using the at least one electronic instrument of the core barrel head assembly to record data relating to orientation of the core to be retrieved, separating the core from the subsurface body, retrieving the core to the surface, and obtaining an indication of the orientation of the core based on the recorded core orientation data obtained once the drilling had ceased and before the core was separated from the subsurface body.

[0015] Advantages are that there is more time available for drilling due to less time required for surveying and manipulating additional pieces of equipment and mechanical extensions during the survey process.

BRIEF DESCRIPTION OF THE FIGURES

[0016] Figure 1 shows a perspective view of a core barrel head assembly being operatively coupled to a head assembly.

[0017] Figure 2 shows a longitudinal cross-sectional view of Figure 1.

[0018] Figure 3 shows an expanded view of a portion of Figure 2, showing the core barrel head assembly.

[0019] Figure 4 shows a perspective exploded view of the core barrel head assembly of Figure 1.

[0020] Figure 5 shows a longitudinal cross-sectional view of the core barrel head assembly, showing an at least one electronic instrument and an electrically coupled power source disposed therein an interior cavity of a body of the core barrel head assembly.

[0021] Figure 6 shows a longitudinal cross-sectional view of another aspect of the core barrel head assembly, showing an at least one electronic instrument and an electrically coupled power source disposed therein an interior cavity of a body of the core barrel head assembly.

[0022] Figure 7 shows a longitudinal cross-sectional view of the body of the core barrel head assembly.

[0023] Figure 8 shows a longitudinal cross-sectional view of a core barrel head assembly being operatively coupled to a head assembly.

[0024] Figure 9 shows a schematic view of an exemplary at least one electronic instrument.

[0025] Figure 10 shows a schematic view of an exemplary at least one electronic instrument and an electrically coupled power source for disposition therein an interior cavity of a body of the core barrel head assembly.

[0026] Figure 11 shows an exemplary high level flowchart relating to a method of using the present invention.

[0027] Figure 12 shows an exemplary flowchart relating to an alternative embodiment of a method of using the present invention.

[0028] Figure 13 shows an exemplary flowchart relating to an alternative embodiment of a method of using the present invention.

[0029] Figure 14 shows an exemplary prior art hand held device for wirelessly interrogating the core barrel head assembly of the present invention.

DETAILED DESCRIPTION

[0030] The present invention can be understood more readily by reference to the following detailed description, examples, drawings, and claims, and their previous and following description. However, before the present devices, systems, and/or methods are disclosed and described, it is to be understood that this invention is not limited to the specific devices, systems, and/or methods disclosed unless otherwise specified, as such can, of course, vary. It is also to be understood that the terminology used herein is for the purpose of describing particular aspects only and is not intended to be limiting.

[0031] The following description of the invention is provided as an enabling teaching of the invention in its best, currently known embodiment. To this end, those skilled in the relevant art will recognize and appreciate that many changes can be made to the various aspects of the invention described herein, while still obtaining the beneficial results of the present invention. It will also be apparent that some of the desired benefits of the present invention can be obtained by selecting some of the features of the present invention without utilizing other features. Accordingly, those who work in the art will recognize that many modifications and adaptations to the present invention are possible and can even be desirable in certain circumstances and are a part of the present invention. Thus, the following description is provided as illustrative of the principles of the present invention and not in limitation thereof.

[0032] As used throughout, the singular forms “a,” “an” and “the” include plural referents unless the context clearly dictates otherwise. Thus, for example, reference to “a port” can include two or more such ports unless the context indicates otherwise.

[0033] Ranges can be expressed herein as from “about” one particular value, and/or to “about” another particular value. When such a range is expressed, another

aspect includes from the one particular value and/or to the other particular value. Similarly, when values are expressed as approximations, by use of the antecedent "about," it will be understood that the particular value forms another aspect. It will be further understood that the endpoints of each of the ranges are significant both in relation to the other endpoint, and independently of the other endpoint.

[0034] As used herein, the terms "optional" or "optionally" mean that the subsequently described event or circumstance may or may not occur, and that the description includes instances where said event or circumstance occurs and instances where it does not.

[0035] The word "or" as used herein means any one member of a particular list and also includes any combination of members of that list.

[0036] As will be appreciated by one skilled in the art, the methods and systems may take the form of an entirely hardware embodiment, an entirely software embodiment, or an embodiment combining software and hardware aspects. Furthermore, the methods and systems may take the form of a computer program product on a computer-readable storage medium having computer-readable program instructions (*e.g.*, computer software) embodied in the storage medium. More particularly, the present methods and systems may take the form of web-implemented computer software. Any suitable computer-readable storage medium may be utilized including, without limitation, hard disks, CD-ROMs, optical storage devices, magnetic storage devices, or solid-state electronic storage devices.

[0037] Embodiments of the methods and systems are described below with reference to block diagrams and flowchart illustrations of methods, systems, apparatuses and computer program products. It will be understood that each block of the block diagrams and flowchart illustrations, and combinations of blocks in the block diagrams and flowchart illustrations, respectively, can be implemented by computer program instructions. These computer program instructions may be loaded onto a general purpose computer, special purpose computer, or other programmable data processing apparatus to produce a machine, such that the instructions which execute

on the computer or other programmable data processing apparatus create a means for implementing the functions specified in the flowchart block or blocks.

[0038] These computer program instructions may also be stored in a computer-readable memory that can direct a computer or other programmable data processing apparatus to function in a particular manner, such that the instructions stored in the computer-readable memory produce an article of manufacture including computer-readable instructions for implementing the function specified in the flowchart block or blocks. The computer program instructions may also be loaded onto a computer or other programmable data processing apparatus to cause a series of operational steps to be performed on the computer or other programmable apparatus to produce a computer-implemented process such that the instructions that execute on the computer or other programmable apparatus provide steps for implementing the functions specified in the flowchart block or blocks.

[0039] Accordingly, blocks of the block diagrams and flowchart illustrations support combinations of means for performing the specified functions, combinations of steps for performing the specified functions and program instruction means for performing the specified functions. It will also be understood that each block of the block diagrams and flowchart illustrations, and combinations of blocks in the block diagrams and flowchart illustrations, can be implemented by special purpose hardware-based computer systems that perform the specified functions or steps, or combinations of special purpose hardware and computer instructions.

[0040] In one aspect, a drill assembly for drilling into a subsurface body of material can comprise a drill string 10 comprising a drill bit, an outer tube formed of linearly connected tube sections, and an inner tube for receiving the core drilled from the subsurface body. In one aspect, the core barrel head assembly 30 is integrated into the drill string 10 to form a portion of the drill string, such as shown in Figure 1, where the core barrel head assembly is operably coupled to a conventional head assembly 20.

[0041] The core barrel head assembly is configured for connection to tube portions of a drill string via respective connection means. In another aspect, the at least one electronic instrument of the core barrel head assembly can be mounted, for example

and without limitation, within the interior cavity defined the body, within an interior cavity that is defined therein a side wall of the body of the core barrel head assembly, or potted or in sealed contact with a portion of a side wall of the core barrel assembly (on either an exterior surface or an interior surface of a cavity defined therein the body). As one skilled in the art will contemplate, the core barrel head assembly can comprise at least one electronic instrument that is configured to obtain orientation data, an electrically coupled power source and communication means to receive and/or transmit orientation data.

[0042] In one aspect, and referring to Figures 1-7, the core barrel head assembly 30 can comprise at least one electronic instrument 40 that is configured to obtain orientation data, a operatively electrically coupled power source 50 and communication means to receive and/or transmit orientation data. In one aspect, at least one electronic instrument 40 can comprise at least one digital and/or electro-mechanical sensors 42, and/or one or more physical data sensors 44 in a core orientation data recording tool that can be configured to determine the core orientation just prior to or after the core break, and, optionally, to detect the signal of the break of the core from the body of material. In various aspects, it is contemplated that the recorded data can optionally include “dip” angle and/or azimuth datum to increase the reliability of the core orientation results as described below.

[0043] In this aspect, the at least one digital and/or electro-mechanical sensor 42 in operative communication with the at least one electronic instrument 40 of the core barrel assembly can be configured to detect vibration and/or to detect tri-axial gravitation loading acting on the electronic instrument. In one exemplary aspect, once a desired vibration state is detected and/or a desired G-loading state is detected , drilling can cease and the core barrel head assembly can record data relating to the orientation of the core, such as, for example and without limitation, gravitational field strength and direction, and/or magnetic field strength and direction.

[0044] The core barrel head assembly 30 has a proximal end 32 that is operatively oriented toward the drill bit end of the drill string and an opposed distal end 34. As shown in Figures 1 and 5-6, the core barrel head assembly 30 has an elongate tube

body 60 that is conventionally joined to a conventional wire line retrieval portion of a head assembly 10. Thus, the head assembly of the drill string is complete without the necessity for the use of an unwieldy extension tube as required in the prior art designs.

[0045] The threaded proximal end 62 of the elongate tube body 60 is in communication with a first interior cavity 64 that extends distally to a base portion 65. Proximate the base portion of the second interior cavity, a port 66 is defined that extends from the exterior surface of the elongate tube body into fluid communication with the first interior cavity. Optionally, in this aspect, it is contemplated that a grease fitting 68 can be mounted in the port 66 to allow for selective passage of grease or lubricant into communication with the first interior cavity and vice versa.

[0046] A second interior cavity 70 is defined therein the elongate tube body 60 that is spaced from and extends distally from the first interior cavity. The second interior cavity 70 can be sized to hermetically enclose at least one of the least one electronic instrument 40 that is configured to obtain orientation data, the power source 50 and the communication means to receive and/or transmit orientation data. In another aspect, the second interior cavity 70 can be sized to hermetically enclose the least one electronic instrument 40 that is configured to obtain orientation data and the power source 50. In one aspect, the at least one electronic instrument 40 can comprise the electronic instrument discussed above and schematically shown in Figures 8 and 9. The at least one electronic instrument 40 is operatively electrically coupled to the power source 50, which can comprise any conventional power source, such as, for example and without limitation, a battery, a rechargeable battery, and the like.

[0047] In one aspect, as shown, a plurality of windows 74 can be defined in the elongate tube body that extend from the exterior surface 61 of the elongate tube body into the second interior chamber 70 proximate the closed proximal end 72 of the second interior chamber. In a further aspect, an orientation indicator module 80 can be provided that comprises a plurality of light emitters 82. The orientation indicator module 80 can be sized and shaped to sealingly close the second interior chamber from any intrusion of pressurized fluid into the second interior chamber 70 via the defined plurality of windows 74.

[0048] In another aspect, it is contemplated that the second interior cavity can comprise at least one orienting slot defined therein. In this aspect, the orientation indicator module can be oriented manually and the desired position can be maintained to the at least one O-ring seal 84 described below. Optionally, in a further aspect, the orientation indicator module 82 is configured to orient or otherwise position a plurality of light emitters 88 so that each light emitter underlies one window.

[0049] In one aspect, the orientation indicator module 80 can further comprise a sealing means for preventing any pressurized fluid from entering the second interior cavity 70 from the defined windows 74. In one aspect, the sealing means can comprise at least one O-ring seal 84 that is mounted on an exterior portion of the orientation indicator module and that is configured to seal between the exterior portion of the orientation indicator module and a portion of the interior surface of the second interior cavity.

[0050] In one exemplary aspect, light from the plurality of light emitters 88 (*e.g.* LEDs, and the like) passes through or can be observed through the plurality of windows 74. Reference arrow A refers to the drill bit end direction, and reference arrow B refers to the head assembly direction. Further, as described above, the process of obtaining core orientation is made easier by only requiring two color lights, such as, for example and without limitation, green and red, to indicate one or other direction of rotation to establish correct core orientation prior to marking. The indicators form part of the sealed device and can be low power consumption LED lights.

[0051] Alternatively, flashing lights may be used, such as, for example and without limitation, a certain frequency or number of flashes for one direction and another frequency or number of flashes for the other direction of rotation. A steady light could be given when correct orientation is achieved. Thus, advantageously, when the core barrel head assembly 30 and the core sample are recovered from down the hole, the core barrel head assembly 30 need not be separated from the drill string in order to determine a required orientation of the core sample. Wireless communication to a remote device, such as a hand held device, to transfer data between the core barrel

head assembly and the remote device, can also be effected by transmitting through the at least one aperture.

[0052] In another aspect, the second interior cavity 70 extends distally to the open distal end 73 of the elongate tube body 60. To further effect a hermetical enclosure of the least one electronic instrument 40 that is configured to obtain orientation data, the power source 50 and, optionally, the communication means to receive and/or transmit orientation data, a seal coupler 90 can be provided that is configured to be sealingly received in the open threaded distal end 73 of the elongate tube body 60. As noted, a sealing means can be provided to prevent any pressurized fluid from entering the second interior cavity. In one aspect, the sealing means can comprise at least one O-ring seal 95 that is mounted on a portion of the seal coupler and that is configured to seal between a portion of the seal coupler and a portion of the interior surface of the open distal end of the elongate tube body.

[0053] In a further aspect, to further effect a hermetical seal of the second interior cavity and to provide fluid control for the wire line operation, a check valve assembly 100 is provided. In one aspect, the check valve assembly 100 comprises a coupled proximal end assembly and a distally tapered seat that defines an interior chamber 110 for operative receipt of a check ball 120.

[0054] In one aspect, the proximal end assembly102 of the check valve assembly can define a female threaded coupling that is configured to be threadably coupled to the male threads defined on the exterior surface of the distal end 73 of the elongate tube body 60. As one skilled in the art will appreciate, as the proximal end assembly of the check valve assembly 100 is threadably coupled to the distal end 73 of the elongate tube body, the seal coupler 90 is driven into a sealed position therein the second interior cavity 70 to affect complete hermeticity.

[0055] Further, as one skilled in the art will appreciate, because the orientation indicator module 90 is sealingly disposed in the proximal end of the second interior chamber 70, the least one electronic instrument 40, the power source 50 and, optionally, the communication means to receive and/or transmit orientation data is disposed in operative contact with the orientation indicator module, and the seal coupler

90 is disposed in contact with the least one electronic instrument 40, the power source 50 and, optionally, the communication means to receive and/or transmit orientation data, as the proximal end assembly of the check valve assembly is threadably coupled to the distal 73 end of the elongate tube body, both the sealing means on the respective orientation indicator module 80 and the seal coupler 90 are driven into a sealed position therein the second interior cavity to affect complete hermeticity of the second interior cavity.

[0056] In another aspect, the interior chamber 110 of the check valve assembly extends to a distal end 104 of the check valve assembly. In this aspect, at least one port 106 is provided that extends from the exterior surface of the check valve assembly and is in fluid communication with the interior chamber of the check valve assembly. In one aspect, the at least one port 106 can comprise a plurality of ports. In this aspect, it is contemplated that the plurality of ports can be angularly spaced an equal or an unequal number of degrees apart.

[0057] In this aspect, the interior chamber 110 can have a distally tapered seat 112 that is adapted to selectively receive the ball 120 that is sized to selectively block the distally tapered seat. One skilled in the art will appreciate that the interior chamber 110 of the check valve assembly 100 can be sized and shaped to allow the ball to selectively move axially between an open position, in which the ball is spaced proximally away from the surface of the tapered seat so that pressurized fluid can move through the distal end of the check valve assembly and subsequently through the interior chamber to exit out of the at least one port, and a closed position, in which the ball is pressurized against the surface of the tapered seat so that pressurized fluid cannot move through the check valve assembly.

[0058] In a further aspect, the exterior surface 61 of the elongate tube body 60 can define a plurality of female planar stops 67 proximate the mid-body portion. These female planar stops aid in grasping and selectively orienting the orientation of the core barrel head assembly 30. Optionally, additional female planar stops 69 can be defined proximate the indicator widows defined in the elongate tube body to aid in ease of selectively orienting the sample.

[0059] Referring now to Figure 8, an alternative embodiment of the core barrel head assembly 30 is shown that comprises at least one electronic instrument 40 that is configured to obtain orientation data, a operatively electrically coupled power source 50 and communication means to receive and/or transmit orientation data.

[0060] In this aspect the core barrel head assembly 130 has a proximal end 132 that is operatively oriented toward the drill bit end of the drill string and an opposed distal end 134. As shown in Figure 8, the core barrel head assembly 130 is conventionally joined to a conventional wire line retrieval portion of a head assembly 10. Thus, the head assembly of the drill string is complete without the necessity for the use of an unwieldy extension tube as required in the prior art designs.

[0061] The core barrel head assembly 130 has an elongate tube body 160 that is operably coupled to elongate hollow spindle 170 that is, in turn, operably coupled to a selectively open check valve assembly 180. The elongate tube body has a threaded proximal end 162 that defines an internal bushing mount 163. The open distal end 164 of the elongate tube body defines an internal shoulder 165 that is sized and shaped to receive at least one conventional cylindrical bearing 190.

[0062] A bushing 192 is mounted in the bushing mount and is sized and shaped to rotatably receive the proximal end 172 of the hollow spindle 170. As shown in the figures, a mid-portion of the hollow spindle is rotatably supported by the at least one bearing 190. In a further aspect, a nut 194 is coupled to a treaded portion 174 of the hollow spindle 170 adjacent to the proximal end of the hollow spindle 170.

[0063] The a portion of the interior wall 165 of the elongate tube body 160, a portion of the nut 194 and a portion of the exterior surface of the hollow spindle define a an interior cavity 166 into which a spring is mounted and the at least one electronic instrument 40 that is configured to obtain orientation data, a operatively electrically coupled power source 50 and communication means to receive and/or transmit orientation data are mounted. The least one electronic instrument 40 that is configured to obtain orientation data, a operatively electrically coupled power source 50 and communication means to receive and/or transmit orientation data can be integrated; potted or otherwise affixed to the elongate tube body within the interior cavity 166. As

one skilled in the art will appreciate, as the hollow spindle turns, the elongate tube body will remain in the same position, *i.e.*, the elongate tube body does not turn when the hollow spindle is turned.

[0064] In an optional aspect, a port 167 is defined that extends from the exterior surface of the elongate tube body into fluid communication with the interior cavity. Optionally, in this aspect, it is contemplated that a grease fitting 168 can be mounted in the port 167 to allow for selective passage of grease or lubricant into communication with the interior cavity.

[0065] It is contemplated that the interior cavity 166 can be sized to hermetically enclose at least one of the least one electronic instrument 40 that is configured to obtain orientation data, the power source 50 and the communication means to receive and/or transmit orientation data. In another aspect, the interior cavity 166 can be sized to hermetically enclose the least one electronic instrument 40 that is configured to obtain orientation data and the power source 50. In one aspect, the at least one electronic instrument 40 can comprise the electronic instrument discussed above and schematically shown in Figures 9 and 10. The at least one electronic instrument 40 is operatively electrically coupled to the power source 50, which can comprise any conventional power source, such as, for example and without limitation, a battery, a rechargeable battery, and the like.

[0066] In a further aspect, to provide fluid control for the wire line operation, a selectively open check valve assembly 180 is provided. In one aspect, the check valve assembly 180 comprises a coupled end assembly 182 defining a proximally tapered seat 184 that defines an interior chamber 185 for operative receipt of a check ball 195.

[0067] In one aspect, the coupled end assembly 182 of the check valve assembly can define a female threaded coupling that is configured to be threadably coupled to the male threads defined on the exterior surface of the distal end 173 of the hollow spindle 170. Thus, as shown in the figures, the tapered seat 184 is operably coupled to the distal end 173 of the spindle 170 such that the hollow interior of the spindle 170 can be selectively placed in fluid communication with fluid governed by the check valve assembly 180.

[0068] As one skilled in the art will appreciate, the end assembly 182 of the check valve assembly defines at least one port 186 that extends from the exterior surface of the check valve assembly and is in fluid communication with the interior chamber of the check valve assembly. In one aspect, the at least one port 186 can comprise a plurality of ports. In this aspect, it is contemplated that the plurality of ports can be angularly spaced an equal or an unequal number of degrees apart.

[0069] In this aspect, the interior chamber 185 can have a proximally tapered seat 184 that is adapted to selectively receive the ball 195 that is sized to selectively block the proximally tapered seat. One skilled in the art will appreciate that the interior chamber 185 of the check valve assembly 180 can be sized and shaped to allow the ball to selectively move axially between an open position, in which the ball is spaced proximally away from the surface of the tapered seat so that pressurized fluid can move out through the elongate spindle into the proximal end of the check valve assembly and subsequently through the interior chamber of the check valve assembly to exit out of the at least one port, and a closed position, in which the ball is pressurized against the surface of the tapered seat so that pressurized fluid cannot move through the check valve assembly to through the hollow spindle.

[0070] In operation, it is contemplated that, in one non-limiting example, the at least one electronic instrument 40 of the core barrel head assembly 30 does not take any orientation measurements while vibrations, such as from the drilling operation, are present. In this aspect, the combination of mechanical, electromechanical and/or electronic sensors and software algorithms programmed into the at least one electronic instrument of the core barrel head assembly are configured to determine that the core barrel head assembly is in motion while descending down the hole and during drilling and is therefore not yet needed to detect breaking of the core sample from the body of material. Similarly, in a further aspect, it is contemplated that the at least one electronic instrument of the core barrel head assembly can be configured to detect that the core barrel head assembly is ascending to the surface for core retrieval after core breaking and subsequently will not take any core orientation measurements during the ascending operation.

[0071] In one non-limiting example, in operation, when the driller is ready to break the core, the driller can selectively not rotate the drill string for a first predetermined delay time period that can range from between about 10 seconds to about 90 seconds. During the delay time period, it is contemplated that an orientation and dip measurement can be taken during this non-rotation, *i.e.*, minimal vibration, period. Subsequently, after breaking the core, the driller can wait a second predetermined delay time period that can range from between about 60 seconds to about 120 seconds, or at least 90 seconds before initiating further rotation.

[0072] Optionally, it is contemplated that pressure created within the borehole by drilling mud and/or water, which may be pumped down the borehole from the surface can be detected by the at least one electronic instrument 42, which can comprise at least one pressure sensor. In various non-limiting examples, the at least one pressure sensor can be mounted on the drill string, such as on the inner and/or outer drill tube or on the drill bit or on the core barrel head assembly. The detected pressure, such as, for example and without limitation, pressure within the inner tube receiving the core, or pressure differential, such as, for example and without limitation, pressure differential between/across the inner and outer tubes, can be indicative of the inner tube being nearly or totally full of core material. This can occur before the core is separated from the subsurface body of material (such as by breaking the core from the body by a sharp pull back on the core) and hence can provide an indicator that the core is about to be broken.

[0073] Optionally, it is contemplated that the least one electronic instrument 40, which is configured to obtain orientation data, the power source 50 and the communication means to receive and/or transmit orientation data can be sized and shaped to be integrally mounted therein conventional wire line assemblies. It this aspect, the least one electronic instrument 40 that is configured to obtain orientation data, the power source 50 and the communication means to receive and/or transmit orientation data can be miniaturized and/or flexible to be received within defined cavities therein the conventional wire line assemblies and can be subsequently hermetically sealed, such as with, for example and without limitation, an epoxy, therein the defined cavities.

[0074] One skilled in the art will appreciate that the core barrel head assembly 30 does not need to be separated from the head assembly 20 in order to determine core sample orientation and/or to gather data recorded by the tool means that there is less risk of equipment failure and drilling downtime, as well as reduced equipment handling time through not having to separate the sections in order to otherwise obtain core sample orientation. Known systems require an end-on interrogation of the tool. By providing a sealed apparatus and the facility to determine orientation of the core sample by observing the orientation indications through one or more windows 74 in the side of the elongate tube body 60, reliability and efficiency of core sample collection and orientating is improved. Consequently operational personnel risk injury, as well as additional downtime of the drilling operation. Without having to separate core barrel head assembly 30 from the head assembly, the orientation of the core sample can be determined and the gathered information retrieved with less drilling delay and risk of equipment damage/failure.

[0075] Further, unlike known systems, the core barrel head assembly 30 provides for the desired flow of pressurized fluid in the wire-line assemblies to conventionally operate the fluid control vales that are commonly used in wire-line operations. As noted, the check valve assembly 100 allows for the selectively passage of fluid therethrough that assembly and to the exterior surface of the core barrel head assembly 30 and subsequently through the pressure relief valve to exit out of the first interior cavity of the elongate tube body.

[0076] In one aspect, the one or more pressure sensors 42 can be provided to detect pressure data, which can comprise pressure readings; changes in pressure and/or pressure differentials. The pressure data can be operative communication with the core barrel head assembly 30 and/or an operator at the surface. In one exemplary aspect, once a desired pressure value is detected, drilling can cease and the at least one electronic instrument 40 of the core barrel head assembly 30 can record data relating to the orientation of the core, such as gravitational field strength and direction, and/or magnetic field strength and direction.

[0077] In various aspects, it is contemplated that the recorded data can optionally include “dip” angle or azimuth datum to increase the reliability of the core orientation results. Conventionally, dip is the angle of the inner core tube drill assembly with respect to the horizontal plane and can be the angle above or below the horizontal plane depending on drilling direction from above ground level or from underground drilling in any direction. This provides further confirmation that the progressive drilling of a hole follows a maximum progressive dip angle which may incrementally change as drilling progresses, but not to the extent which exceeds a dogleg severity, *i.e.,* a normalized estimate (*e.g.* degrees / 30 meters) of the overall curvature of an actual drill-hole path between two consecutive directional survey/orientation stations.

[0078] In operation, prior to obtaining an orientation and core sample, a remote external communication device can be set by an operator to a start time. The remote external communication device communicates with the at least one electronic instrument 40 of the core barrel head assembly 30 before it is tripped into the drill hole. Subsequently, after a predetermined timed interval has elapsed from the start time, the at least one electronic instrument 40 can be configured to begin normal operation to detect the signature of vibration indicating a core break.

[0079] Optionally, in another aspect, pressure changes or levels can be detected to indicate a pre-break condition or period, such as pressure of mud/water within the inner tube increasing due to the core filling or nearly filling the inner tube holding the core.

[0080] In one aspect, the at least one electronic instrument 40 of the core barrel head assembly 30 can be configured to not take any orientation measurements while vibrations, such as from the drilling operation, are present. In this aspect, the combination of mechanical, electromechanical and/or electronic sensors and software algorithms programmed into the at least one electronic instrument 40 of the core barrel head assembly 30 can be configured to determine that the core barrel head assembly is in motion while descending down the hole and during drilling and is therefore not yet needed to detect breaking of the core sample from the body of material. Similarly, in a further aspect, it is contemplated that the at least one electronic instrument 40 of the core barrel head assembly 30 can be configured to detect that the core barrel head assembly is ascending to the surface for core retrieval after core breaking and

subsequently will not take any core orientation measurements during the ascending operation.

[0081] Optionally, dip angle can be included in determining orientation of the core. In one aspect, the dip angle of the drill hole can be used to determine whether or not to use the obtained orientation data. For example, a valid core orientation sample can be determined from the previously discussed validation steps being acceptable and, additionally, from the dip angle of the drill hole also being within acceptable limits. In one aspect, the dip can be sampled as a reference prior to the first run of a new drill hole. This particular reference is called a setup function. In this aspect, the setup function can be selected on the remote communications device, which then communicates to the core barrel head assembly. For clarity, the core sample orientation subassembly does not orientation the core, rather, it records signals indicative of the orientation of the core to be retrieved. The core barrel head assembly can then be lowered down the hole or aligned to the angle of the drill rods in the case of no hole yet to be drilled. Once the core barrel head assembly is down to a desired position or to the end of the hole the user can “mark” the “shot,” preferably via use of the remote communications device.

[0082] Subsequently, the core barrel head assembly is retrieved and the remote communications device can be used to communicate the dip (angle) of the drill hole to the communication means of the core barrel head assembly. Optionally, the dip of the end of the hole can be manually entered into the remote communications device and this communicated back to the core barrel head assembly.

[0083] In one aspect, a compliant datum is obtained when one or more signals indicative of the orientation of the core is/are obtained by the core orientation device during a period of no drilling vibration prior to detecting vibration from breaking the core and that being prior to a subsequent period of no drilling vibration. It is contemplated that one or more embodiments can utilize the final compliant datum instead of the first obtained compliant datum.

[0084] In one aspect, it is contemplated that the at least one electronic instrument 40 can comprise an LCD display 41 at one end. This can allow for setting up of the orientation system prior to deployment and to indicate visually alignment of the core

sample when retrieved to the surface. The core barrel head assembly 30 can be connected to the core barrel head assembly which can be operably is connected to a sample tube for receiving a core sample. In one aspect, and as exemplarily shown in Figures 8 and 9, the at least one electronic instrument 40 can comprise at least one vibration sensor, at least one accelerometer 43, a memory 45, a timer 47 and the aforementioned LCD display 41. Optionally, at least one electronic instrument 40 can further comprise one or more of at least one of a gravity sensor, magnetic field sensor, inclinometer, a direction measuring sensor, a gyro, and/or preferably a combination two or more of these devices.

[0085] In this aspect, the at least one electronic instrument 40 can be configured to record orientation data every few seconds during core sampling. The start time can be synchronized with actual time using a common stop watch. The operably coupled core barrel head assembly 30 and the core barrel head assembly can then be lowered into the drill string outer casing to commence core sampling. After drilling and capturing a core sample in the inner core sample tube, the operator, can stop the stop watch and retrieve the core sample tube back to the surface. At the surface, before removing the core sample from the inner tube, the operator can views the LCD display, if it is still working, which steps the operator through instructions to rotate the core tube until the core sample lower section is at the core tube lower end . The core sample is then marked and stored for future analysis.

[0086] Another aspect of the present invention provides a method of conducting a down hole survey of drilling, the method including: a) drilling the core from a subsurface body of material; b) recording data relating to orientation of the core to be retrieved, the data recorded using the at least one electronic instrument of the core barrel head assembly, c) separating the core from the subsurface body, and d) obtaining an indication of the orientation of the core based on the recorded core orientation data obtained before the core was separated from the subsurface body.

[0087] Optionally, the method can comprise: determining that drilling has ceased for a period of time, using the at least one electronic instrument of the core barrel head assembly to record data relating to orientation of the core to be retrieved, separating the core from the subsurface body, retrieving the core to the surface, and obtaining an

indication of the orientation of the core based on the recorded core orientation data obtained once the drilling had ceased and before the core was separated from the subsurface body.

[0088] In one exemplary aspect, for the embodiment shown in the flowchart in Figure 11, the core orientation can be validated when the following events have occurred:

a) Step 200: detecting no vibration above a threshold by the core barrel head assembly, or is detected to be below a threshold, for the first predetermined delay time period;

b) Step 220: taking a core orientation measurement during the first predetermined delay time period;

c) Step 230: detecting noise from breaking the core from the subsurface body after the first predetermined delay time period and before the second predetermined delay time period;

d) Step 240: detecting no vibration above a threshold by the core barrel head assembly, or is detected to be below a threshold, for the second predetermined delay time period;

e) Step 250: retaining the orientation measurement obtained in Step 220 only if Steps 200, 230 and 240 are present;

f) Step 260: disregarding detected signals or to not detect vibration or lack of vibration if only if Steps 200, 230 and 240 are obtained. If the detected signals are disregarded, a vibration silence signal in Step 280 must be detected before the core is broken.

[0089] Optionally, as shown in Step 270, a dip measurement can be obtained during the period of no drilling prior to breaking the core (period Y), preferably if dip is within the set limits.

[0090] In one aspect, once the required core orientation is obtained, the core barrel head assembly may be shut down or turned to low power standby mode in Step 290 in preparation to be subsequently placed into an orientation mode. Once the core barrel

head assembly 30 is retrieved to the surface in Step 300, an operator can set the core barrel head assembly to the orientation mode in Step 310. In one example, and not meant to be limiting, this can be done via the remote communication means for communicating with the communication means of the core barrel head assembly in Step 320.

[0091] In a further aspect, it is contemplated that the core barrel head assembly can comprise an orientation indicator assembly that comprises one or more lights or other visual indicators, such as, for example and without limitation, one or more display panels to give an indication of orientation direction and required orientation for marking the core. In this aspect, once in orientation mode, visual indications, such as flashing of one or more LEDs, can indicate to the operator which direction to rotate the core to find the" correct down side" for marking. In this aspect, the "correct downside" is the part of the core that was lowermost prior to separating from the subsurface body.

[0092] Once the correct downside is identified in Step 330, the operator can again effect communication to the communication means of the core barrel head assembly via the remote communication device. In Step 340, and based on the orientation data recorded, the remote communication device can be configured to verify that the correct orientation was achieved. Subsequently, in Step 350, the operator can perform another orientation operation.

[0093] Optional and exemplary methods of using the present invention are shown in Figures 12 and 13. In one aspect, as shown in Figure 12, the at least one electronic instrument 40 of the core barrel head assembly 30 can be programmed to be used in a running mode, a hibernation mode and an orientating mode. In this aspect, the at least one electronic instrument 40 of the core barrel head assembly 30 is configured to actuate and take sequential provisional data readings (POD1, POD2, POD3, etc.) when the at least one electronic instrument senses that vibrations have stopped. These provisional data readings are taken as desired time intervals that can be between about 0.1 to about 1.0 seconds. In this aspect, the core barrel head assembly 30 is configured to actuate or power up when the at least one electronic instrument is taken out hibernation. Further, it is contemplated that the time clock starts operation whenever the at least one electronic instrument 40. For example, this could happen on

the surface prior to insertion into the hole. The programming can also optionally disregard any acquired provisional data (POD1, POD2, POD3, etc.) if vibrations are sensed during any portion of the acquisition of the sequential provisional data readings. In this case, the programming would automatically go to the step "Turn Off G-Sensor" in the running mode.

[0094] In one aspect, as shown in Figure 13, the at least one electronic instrument 40 of the core barrel head assembly 30 can be similarly programmed to be used in a running mode, a hibernation mode and an orientating mode. In this aspect, the at least one electronic instrument 40 of the core barrel head assembly 30 is configured to actuate in accord with a time interval scheme in which a signal is sent to the tri-axial g-sensors to take readings in accord with the predetermined time interval scheme.

[0095] In one aspect, it is contemplated that the core barrel head assembly 30 can be utilized in asynchronous time operation for core sampling. In this aspect, the data recording events taken by the core barrel head assembly 30 are not synchronized in time with the communication device. That is, the core barrel head assembly can be programmed to not commence timing from a reference time, and can optionally be programmed such that the at least one electronic instrument 40 of the core barrel head assembly 30 does not take samples (shots) at specific predetermined time intervals. For example, and not meant to be limiting, the at least one electronic instrument 40 of the core barrel head assembly 30 can be programmed to not take a three second sample every one minute with that one minute interval synchronized to the remote, which would therefore know when each sample is about to take place. In this aspect, the communication means or device is not synchronized to the core orientation unit, *i.e.* asynchronous operation, and therefore the communication device does not know if or when a sample is being taken. Thus, obtaining an indication of core sample orientation is simplified over known arrangements.

[0096] In one aspect, while the core barred head assembly is on the surface, the external communication device can signal to the at least one electronic instrument 40 to activate or come out of a standby mode prior to deployment down hole. Optionally, the at least one electronic instrument 40 can already be activated such that it is not

necessary to have the at least one electronic instrument 40 switch on from a deactivated ('turned off') state.

[0097] Alternatively, the at least one electronic instrument 40 can be configured to activate and commence taking data samples after a predetermined period from deployment from the surface or after elapse of an activation delay timer or other delay mechanism. For example, the data gathering device may be configured at the surface to only 'wake-up' from a standby mode to an activated mode after at least a predetermined period of time has elapsed or a counter has completed a predetermined count relating to a time period delay.

[0098] In one aspect, it is contemplated that the at least one electronic instrument 40 can be programmed to take measurements/record orientation data based on the time intervals and/or randomly generated time intervals. In this aspect, the programmed instructions to record data generated as a result of the regular or randomly generated time intervals can remain on-going while the at least one electronic instrument 40 activated. However, because at least one of the sensor(s) in the at least one electronic instrument 40 may be shut down/deactivated during sensed vibrations, no orientation data gets acquired during time period in which vibrations are sensed. When the vibrations stop, the sensors are turned on and the time intervals instructions would then resume execution as per the time regular or random intervals. In this aspect, orientation data is being measured/obtained per the time intervals being used, as preferably initiated at the beginning of the run or after a delay timer. But, data will not be recorded during the time intervals due to the fact that the sensor(s) will be off/deactivated, *e.g.* during a time period in which vibrations are sensed. In this aspect, when drilling ceases, which results in vibrations ceasing, data will be taken, and may preferably continue to be taken, in accordance with the time intervals scheme initiated at the surface, and preferably may always running in the background even when the sensor(s) is/are off or deactivated (*e.g.*, asleep).

[0099] In a further aspect, the at least one electronic instrument 40 can log and/or record orientation related data down hole at intervals (regular or randomly generated intervals within minimum and maximum interval time limits) and can also measures total lapsed survey time T.

[00100] In a further aspect, the at least one electronic instrument 40 can be started by an external communication device at the surface but a second, different, communication device can be used to 'mark' (to set) the point in time, *i.e.*, to commence the elapsed period of time t relating to breaking the core sample from the underlying rock and thereby be used for identifying the data set recorded immediately before that break.

[00101] In one aspect, to compensate for taking regular or random time period orientation measurements, which uses up battery power as the at least one electronic instrument 40 advances down hole, a start delay can be provided. For example, when the external communication device at the surface is operated, *e.g.*, turned on, an option to set a delay time in the at least one electronic instrument 40 may be displayed. For example, a delay in minutes between 0 to 99 minutes might be displayed. In this aspect, when the at least one electronic instrument 40 is started-up and the communication device communicates the delay period to the at least one electronic instrument 40, the timer in the at least one electronic instrument 40 will allow the delay period to elapse before any orientation measurements are recorded.

[00102] In one aspect, orientation data can be recorded while drilling is ceased and closest to time Tx, where Tx is preferably less than or equal to T-t, and where T is the time recorded by the at least one electronic instrument 40 (survey time) and t is the elapsed time recorded by the external communication device that was commenced once drilling ceased and the orientation data was recorded. In this exemplary aspect, it will be appreciated that the required recorded data may be at a time Tx greater than T-t, *i.e.*, if the drilling remained ceased after commencing the elapsed time and separating (breaking) the core sample from the rock was delayed while the at least one electronic instrument 40 recorded orientation data. Thus, Tx can be greater than T-t providing no drilling activity takes place after drilling ceases and before the core is broken from the underlying rock. In this aspect, in operation, when the core barrel head assembly 30 is retrieved back at the surface with the core sample), the external communication device interrogates the at least one electronic instrument 40 to identify the recorded core orientation data closest to T-t, *i.e.*, the timer of the external communication device is not

synchronised to the timer of the at least one electronic instrument 40, and both timers are not commenced at a reference time.

[00103] For example and without limitation, orientation data may be recorded by the at least one electronic instrument 40 at regular irregular intervals of time within a known range of allowed time intervals, such as one or more of 10s, 15s, 20s or 30s intervals within a range of 1s to 1 minute. It is contemplated that the time intervals can be generated by a random (time) number generator operating within the minimum and maximum allowed range. Thus, the time intervals for obtaining orientation data may be repeated (e.g. 10s, 10s, 10s, 20s, 20s, 10s…). In this exemplary aspect, data recording events ('shots') are therefore not constantly taken on a set time period. However, it is contemplated that predetermined set time intervals may be used. That is, the at least one electronic instrument 40 may record orientation data every time interval, preferably up until the core is broken form the underlying rock, though recording may also continue afterwards.

[00104] In operation, the at least one electronic instrument 40 can be deployed down hole. Optionally, the at least one electronic instrument 40 can be started at the surface and its timer commence the survey time timing at the surface, or the timer can have a delay to save power until the at least one electronic instrument 40 is all or partway down the borehole. Subsequently, when the core sample has been captured sufficiently in the core tube, drilling ceases and during this period of non-drilling, the at least one electronic instrument 40 records orientation data relating to its own orientation in the borehole, and therefore, of the associated core sample that is captured in the core barrel head assembly 30, which cannot rotate unless the at least one electronic instrument 40 also rotates. Next, the core sample is broken away from the underlying rock and the core barrel head assembly 30 is retrieved to the surface.

[00105] In one aspect, an external communication device can record the elapsed time t by a user, *i.e.*, commencing the timer in the handheld external communication device at the surface. This is preferably either when drilling has ceased or immediately before breaking the core from the rock while drilling has ceased, or immediately after the core is broken. However, it will be appreciated that the elapsed time can be

commenced after the core is broken away from the underlying rock because the at least one electronic instrument 40 can be programmed to identify the nearest recorded data older than the commencement of the elapsed time that occurred during no drilling. In this aspect, the external communication device retains a record of the elapsing time.

[00106] When the at least one electronic instrument 40 and core barrel head assembly 30 containing the core sample are retrieved to the surface, the user can interrogate the at least one electronic instrument 40. In this aspect, once the at least one electronic instrument 40 confirms receiving the interrogation command, the communication device can command halting of the survey time T (stopping the at least one electronic instrument 40's timer) and elapsed time t (stopping the external communication device's timer). In this aspect, the external communication device can instruct the at least one electronic instrument 40 to identify the recorded orientation data from immediately before or after the commencement of the elapsed period of time going back from the end of the survey time, *i.e.*, the at least one electronic instrument 40 has to 'look back' in time for the data recorded at or around the elapsed ago. In this aspect, the at least one electronic instrument 40 subtracts the elapsed time t from its survey time T to provide a time Tx associated with the required recorded data obtained when drilling was ceased.

[00107] In this aspect, once the correct recorded orientation data is identified in its memory, the at least one electronic instrument can go into orientation mode so that the core sample can be orientated and that orientation recorded. In one exemplary aspect, recording of orientation data by the at least one electronic instrument 40 is triggered on a time interval basis; this may be by the regular or random time intervals mentioned above. Recording the orientation data may only commence once the time delay has ended. For example, the timer within the at least one electronic instrument 40 may be running from deployment (or before) of the device into the borehole. However, the delay may prevent the device from recording orientation data until the delay has ended. Once the delay has ended, orientation data is recorded according to the prevailing time interval sequence, *i.e.*, randomly generated time intervals or regular time intervals.

[00108] Optionally, when vibration or other motion of the at least one electronic instrument 40 stops down hole sufficiently, the at least one electronic instrument 40 may resume recording orientation data according to the prevailing time interval regime or may switch to another time interval regime for sensing and recording orientation.

[00109] Optionally, the at least one electronic instrument 40 can be programmed to identify core orientation data recorded before breaking of the core sample but based on an elapsed time period commenced after breaking the core sample. The at least one electronic instrument 40 can be programmed to identify the recorded orientation data that that was recorded before commencement of the elapsed time. In a further aspect, the recorded data can be recorded after breaking of the core sample because of the time interval recording regime. In this aspect, if that data set was recorded while nothing was moving down hole (and has not moved since breaking the core), the data set can be trusted to be sufficiently accurate. It can be compared with one or more previous data sets, and if they concur, then can be deemed sufficiently accurate for orientation purposes. Only one of those data sets is needed and any other of them may be discarded or disregarded.

[00110] In a further aspect, it is contemplated that operation of the at least one electronic instrument 40 to commence recording orientation data can be initiated at the surface and device then deployed into the borehole. Commencement of recording orientation data can also be delayed, so as to save battery power by avoiding taking unnecessary or unusable orientation measurements whilst the device is progressing down the borehole. Orientation measurement immediately before or after breaking the core sample from the underlying rock is/are required. In one exemplary aspect, the at least one electronic instrument 40 can have a delay preventing recording of orientation data until the delay ends.

[00111] In another aspect, the at least one electronic instrument 40 can take orientation measurements periodically, such as at random or regular periods of time, and record one or more of those measurements. Preferably the at least one electronic instrument 40 can be in a sleep mode, change to a power-up (wake-up) mode and then take a measurement, and re-enter sleep each interval. In one aspect, if two or more

consecutive orientation measurements are the same, the at least one electronic instrument 40 can ignore, not record or delete from memory unnecessary repeat measurements and only retain one of the repeat measurements, preferably being the first of the identical measurements. In this aspect, each recorded measurement of orientation can be tagged or 'time stamped', preferably relative to the timer running in the at least one electronic instrument 40, *i.e.*, the recorded orientation data is given a time stamp Tx, where x is the particular time within the survey timeframe running in the device. Thus, Tx is the time since the survey time T commenced that that orientation data set was recorded. It is contemplated that Tx can be a real time or cumulative time since commencement of the survey time T. Thus, in this aspect, the at least one electronic instrument 40 can have a real time clock type timer or a 'start-stop' (counter or stopwatch) type timer. When drilling ceases and the core is to be broken from the underlying rock (because there is sufficient core sample in the core barrel), a 'mark' is taken, which commences an elapsed time t at the surface. In this aspect, it is contemplated that this mark can be taken before or after the break at either regular or irregular time intervals.

[00112] Referring now to Figure 14, an exemplary known hand held device 400 which receives wirelessly receives data or signals from the communication means of the core barrel head assembly. In this aspect, communication means of the core barrel head assembly comprises a transmitter which can use line of sight data transfer through the window, such as by infra-red data transfer, or a wireless radio transmission. The communication device 400 can store the signals or data received from the communication means of the core barrel head assembly. In one aspect, the communication device 400 can comprise a display 402, navigation buttons 404, 406, and a data accept confirmation button 408.

[00113] In one aspect, setting up of the core barrel head assembly 30 can be carried out before insertion into the drill hole. Data retrieval can be carried out by infrared communication between the communication means of the core barrel head assembly and a core orientation data receiver or communication device 400. In this aspect, after recovering the core sample inner tube back at the surface, and before removing the core sample from the tube, the operator can optionally remove the head assembly. The

operator can use the remote communication device to obtain orientation data from the communication means of the core barrel head assembly using a line of sight wireless infrared communication between the remote device and communication means of the core barrel head assembly. However, it will be appreciated that communication of data between the communication means of the core barrel head assembly and the communication device 400 can be by other wireless means, such as by radio transmission.

[00114] In this prior art aspect, the whole inner tube, core sample, and core barrel head assembly can be rotated as necessary to determine a required orientation of the core sample. The indicators on the proximal end of the core barrel head assembly indicate to the operator which direction, clockwise or anti-clockwise, to rotate the core sample. One color of indicator can be used to indicate clockwise rotation and another color can be used to indicate anticlockwise rotation is required. This is carried out until the core sample is oriented with its lower section at the lower end of the tube. The core sample is then marked for correct orientation and then used for analysis.

[00115] In one aspect, it is contemplated that the visual and/or audible orientation indicators, under certain site and/or environmental conditions, may not be sufficiently visible or audible. Thus, an additional or alternative means and/or method may be utilized to ensure that the core sample has been correctly oriented. In this embodiment, the exterior surface 61 of the body of the core barrel head assembly 30 can have angular degree marks that optionally are scribed/ etched, machined, molded or otherwise provided, such as by printing or painting, on the exterior surface 61. For example, dashes can be equally spaced around the outside parameter represent one or more angular degrees of the full circle or perimeter. Further scribing of a number every five dashes starting with the number 0 then 5, 10, 15 etc. until 355.

[00116] When the core is retrieved and the communication means of the core barrel head assembly communicates with the hand held communicator 400, additional information can be transmitted from the core barrel head assembly to the communicator 400, such as a number between zero 0 and 359 (inclusive) denoting an angular degree of rotation of core barrel head assembly and the core sample. When the core is oriented during one or more embodiments of the method of the present invention, the

numerical scribing the core barrel head assembly should be the same as the number transmitted, to the communicator 400, which re-confirms correct orientation. Thus, if the visual or audible means for indicating core orientation are not useful or available, then the core can be oriented using the angular degree arrangement to match the transmitted number, and then can be audited using the communicator 400.

[00117] Embodiments of the present invention provide the advantage of a fully operating down hole core barrel head assembly without having to disconnect or disassemble any part of the tool/device from the inner tube and/or from the head assembly or any other part of the drilling assembly that the core barrel head assembly would need to be assembled within for its normal operation. Disconnecting or disassembling the core barrel head assembly from the head assembly and/or inner tube risks failure of seals at those connections and/or risks cross threading of the joining thread. Also, because those sections are threaded together with high force, it takes substantial manual force and large equipment to separate the sections. High surrounding pressure in the drill hole means that the connecting seals between sections function to prevent water and dirt from ingressing into and damaging the device.

[00118] Although several embodiments of the invention have been disclosed in the foregoing specification, it is understood by those skilled in the art that many modifications and other embodiments of the invention will come to mind to which the invention pertains, having the benefit of the teaching presented in the foregoing description and associated drawings. It is thus understood that the invention is not limited to the specific embodiments disclosed hereinabove, and that many modifications and other embodiments are intended to be included within the scope of the appended claims. Moreover, although specific terms are employed herein, as well as in the claims which follow, they are used only in a generic and descriptive sense, and not for the purposes of limiting the described invention, nor the claims which follow.

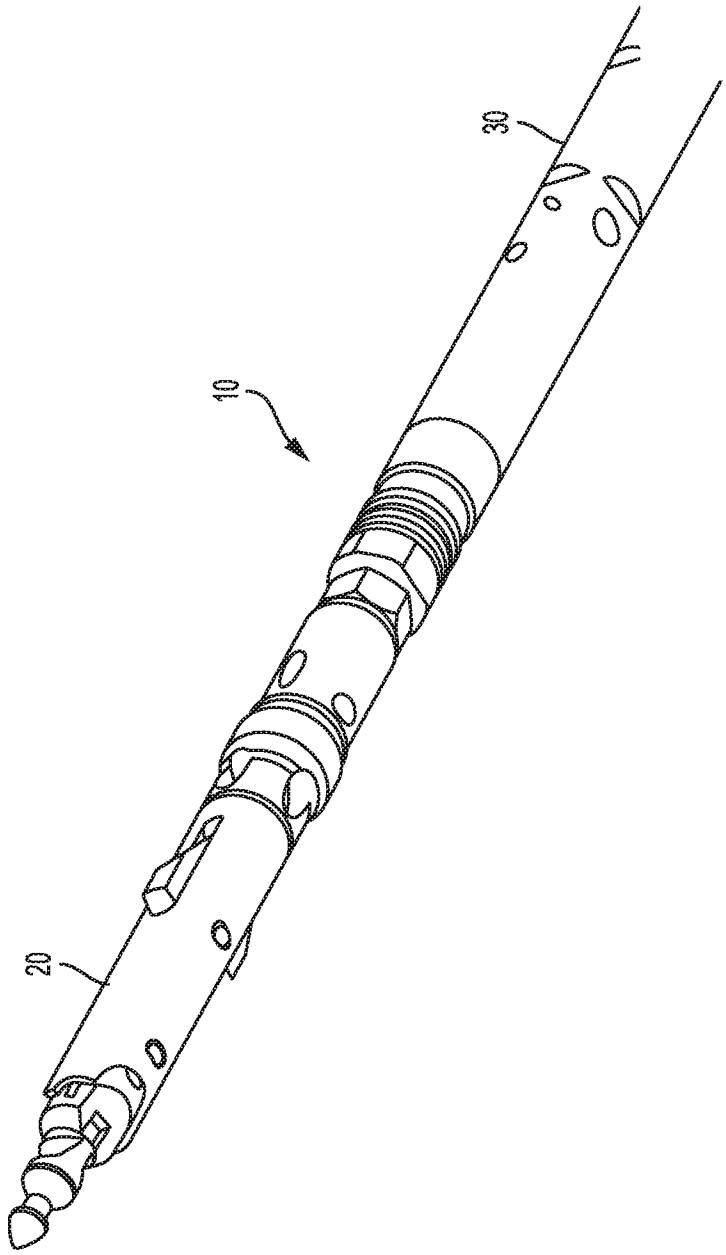

FIG. 1

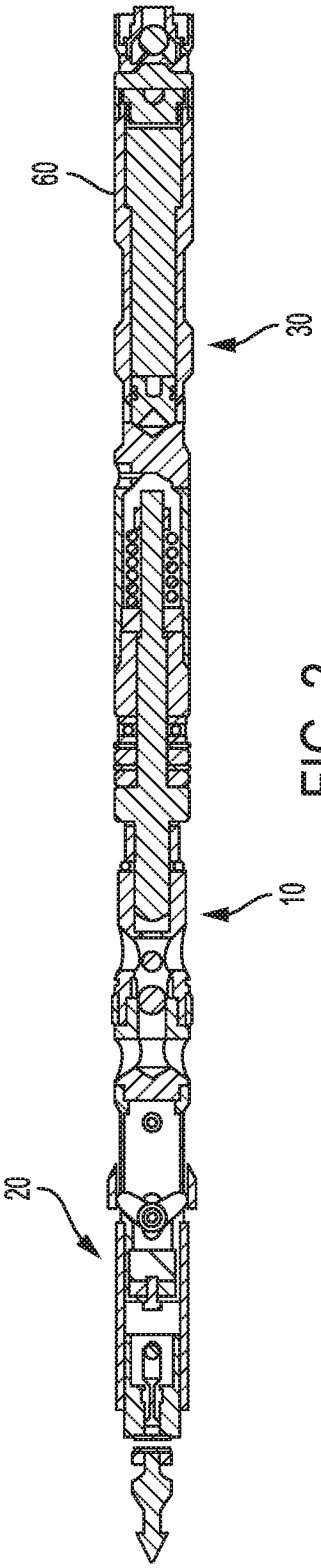
60
30
10
20

FIG. 2

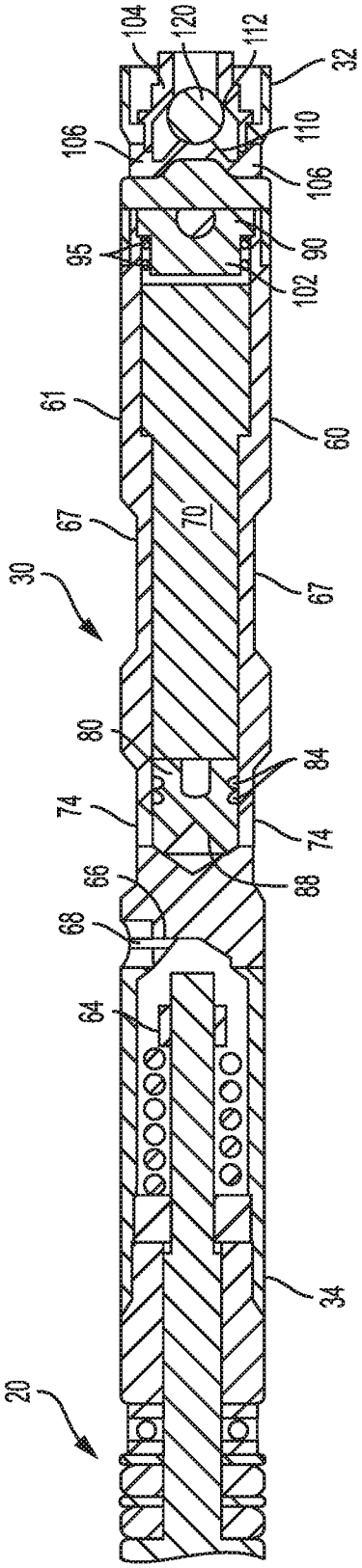
104
120
112
32
106
110
106
95
90
102
61
60
67
70
67
30
80
84
74
74
66
88
68
64
34
20

FIG. 3

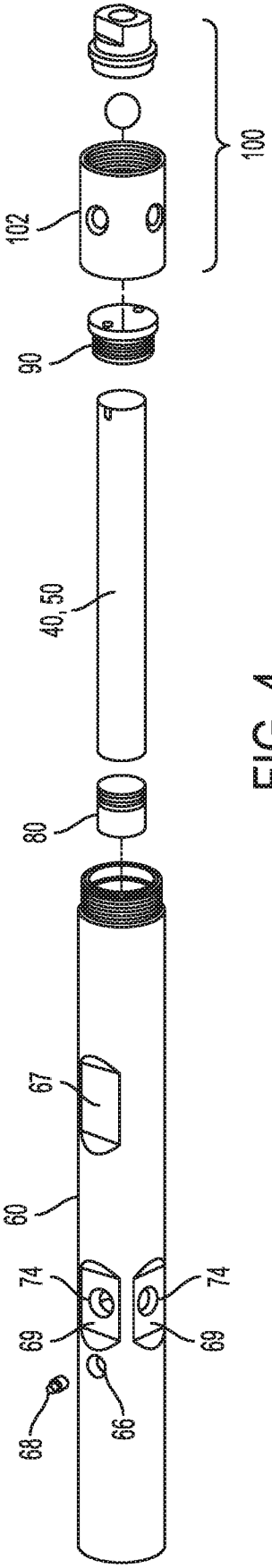
100
102
90
40, 50
80
67
60
74
69
68
66

FIG. 4

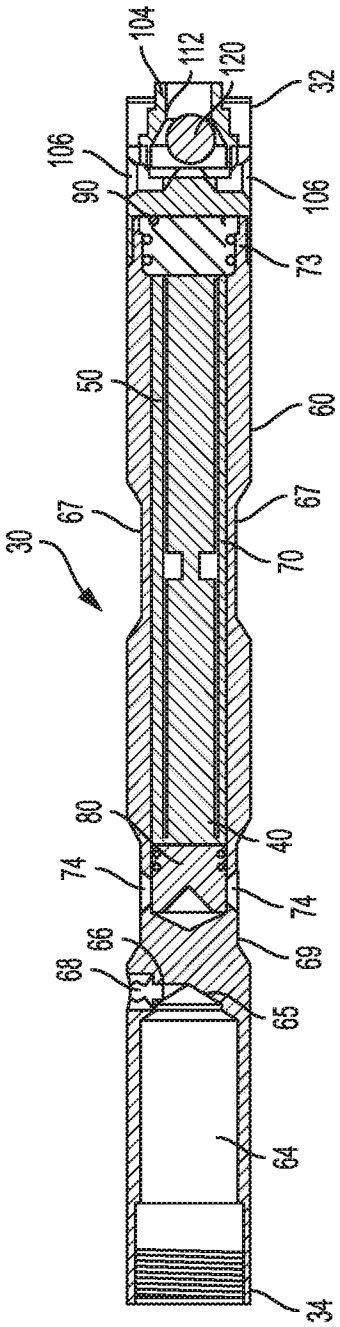
104
112
120
32
106
90
73
50
60
67
30
70
80
40
74
66
68
69
65
64
34

FIG. 5

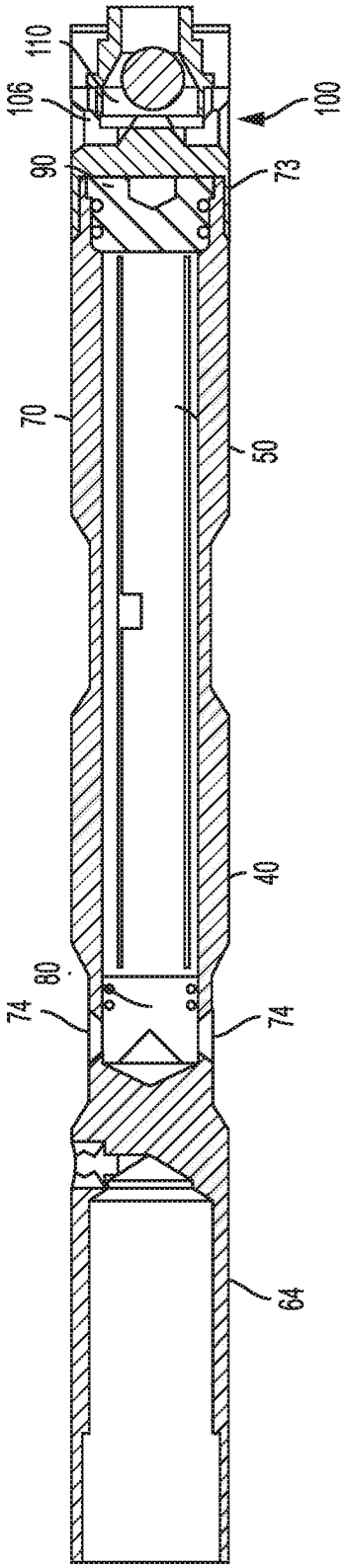

FIG. 6

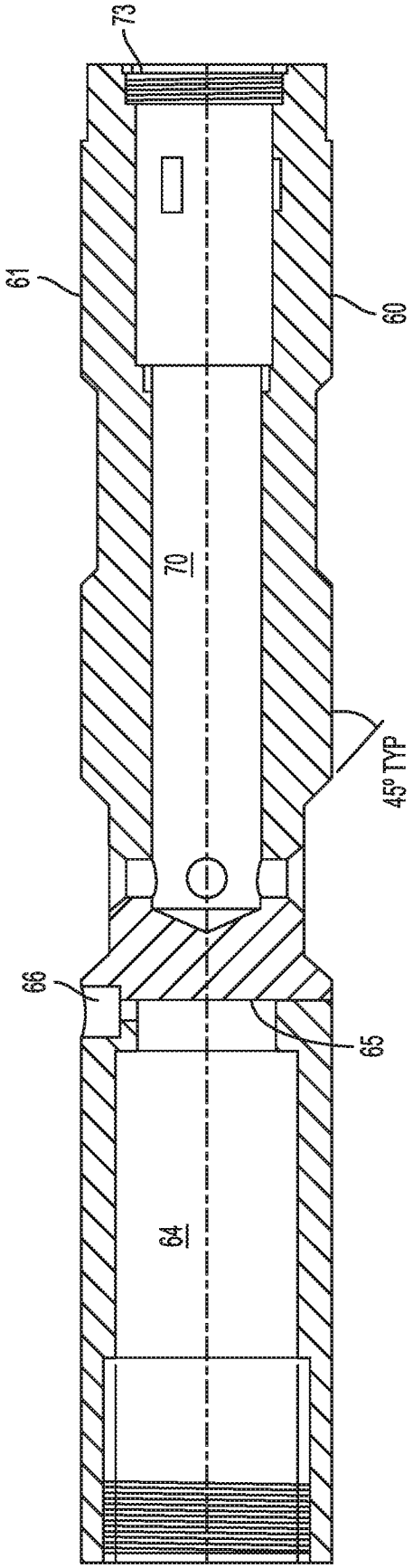

FIG. 7

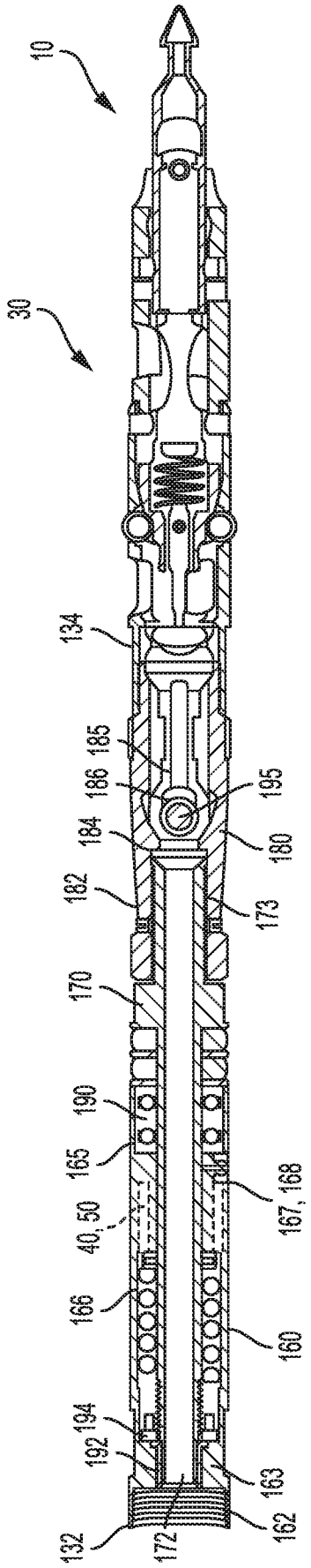
10
30
134
185
186
184
182
170
190
165
40, 50
166
194
192
132
172
195
180
173
167, 168
160
163
162

FIG. 8

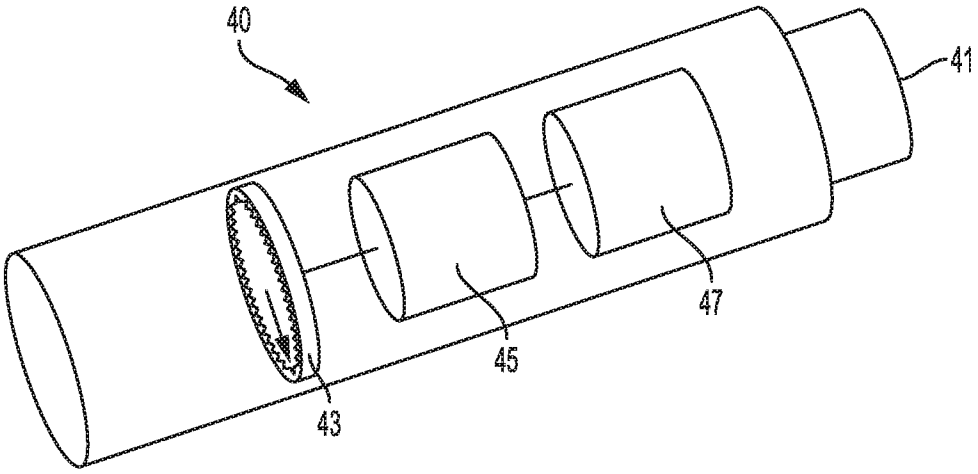

FIG. 9

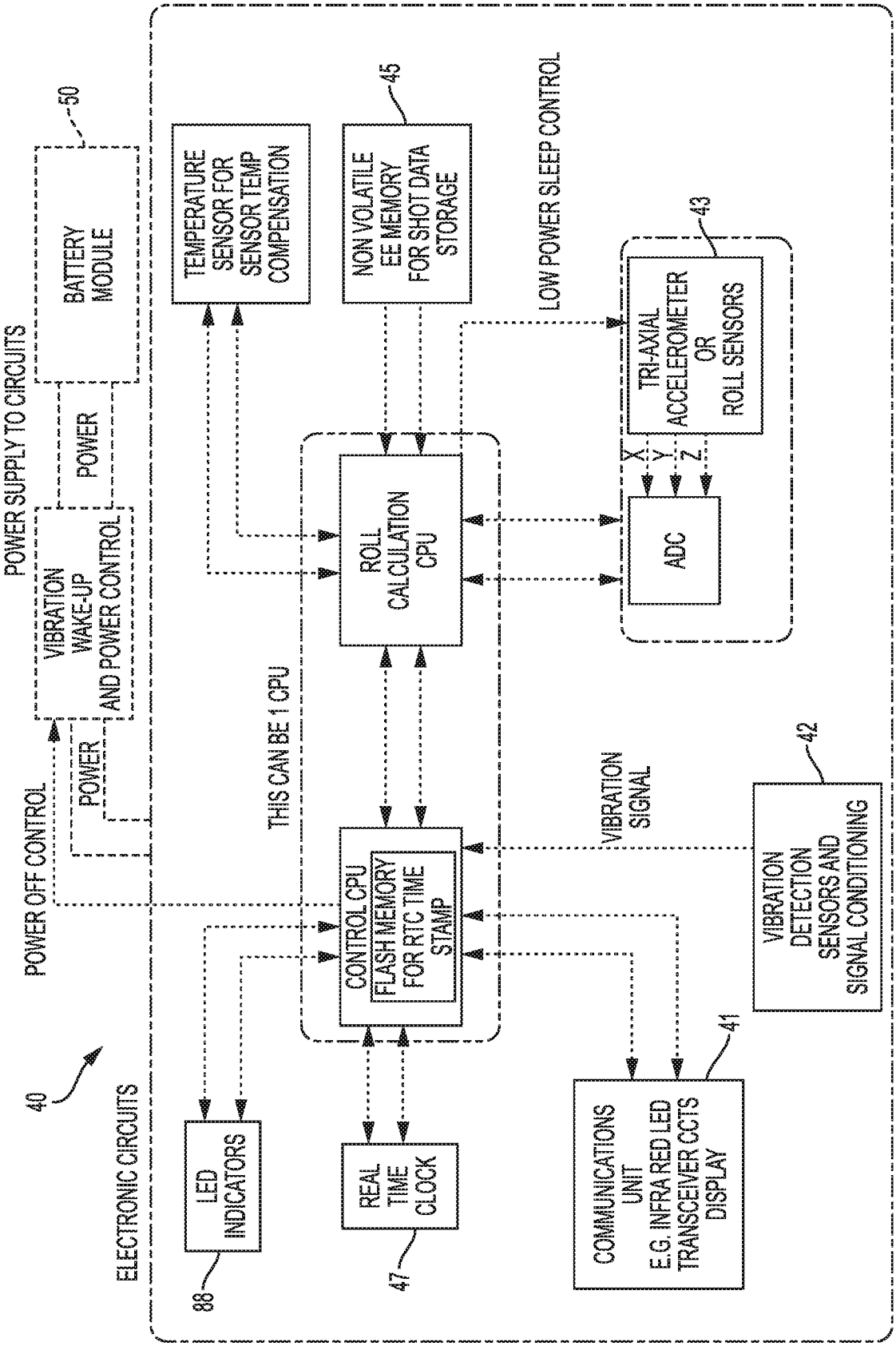
40
ELECTRONIC CIRCUITS
POWER OFF CONTROL
POWER SUPPLY TO CIRCUITS
50
BATTERY MODULE
POWER
VIBRATION WAKE-UP AND POWER CONTROL
POWER
TEMPERATURE SENSOR FOR SENSOR TEMP COMPENSATION
45
NON VOLATILE EE MEMORY FOR SHOT DATA STORAGE
LOW POWER SLEEP CONTROL
43
TRI-AXIAL ACCELEROMETER OR ROLL SENSORS
X
Y
Z
ADC
ROLL CALCULATION CPU
THIS CAN BE 1 CPU
CONTROL CPU
FLASH MEMORY FOR RTC TIME STAMP
VIBRATION SIGNAL
42
VIBRATION DETECTION SENSORS AND SIGNAL CONDITIONING
41
COMMUNICATIONS UNIT
E.G. INFRA RED LED TRANSCEIVER CCTS DISPLAY
LED INDICATORS
88
REAL TIME CLOCK
47

FIG. 10

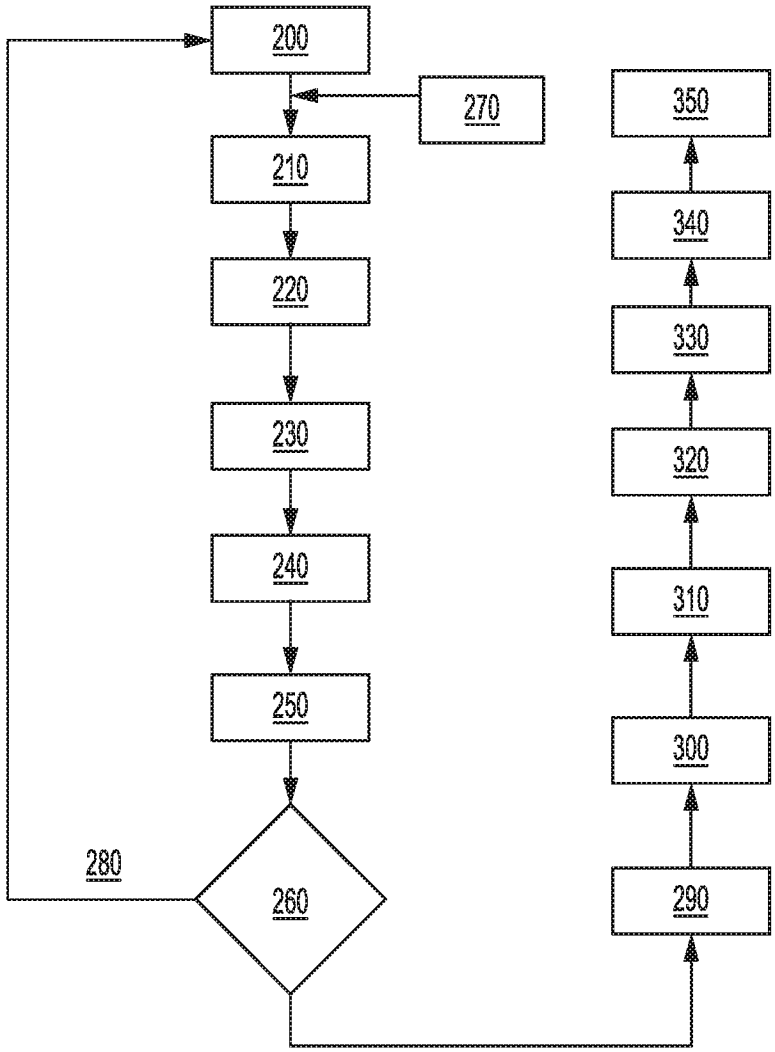

FIG. 11

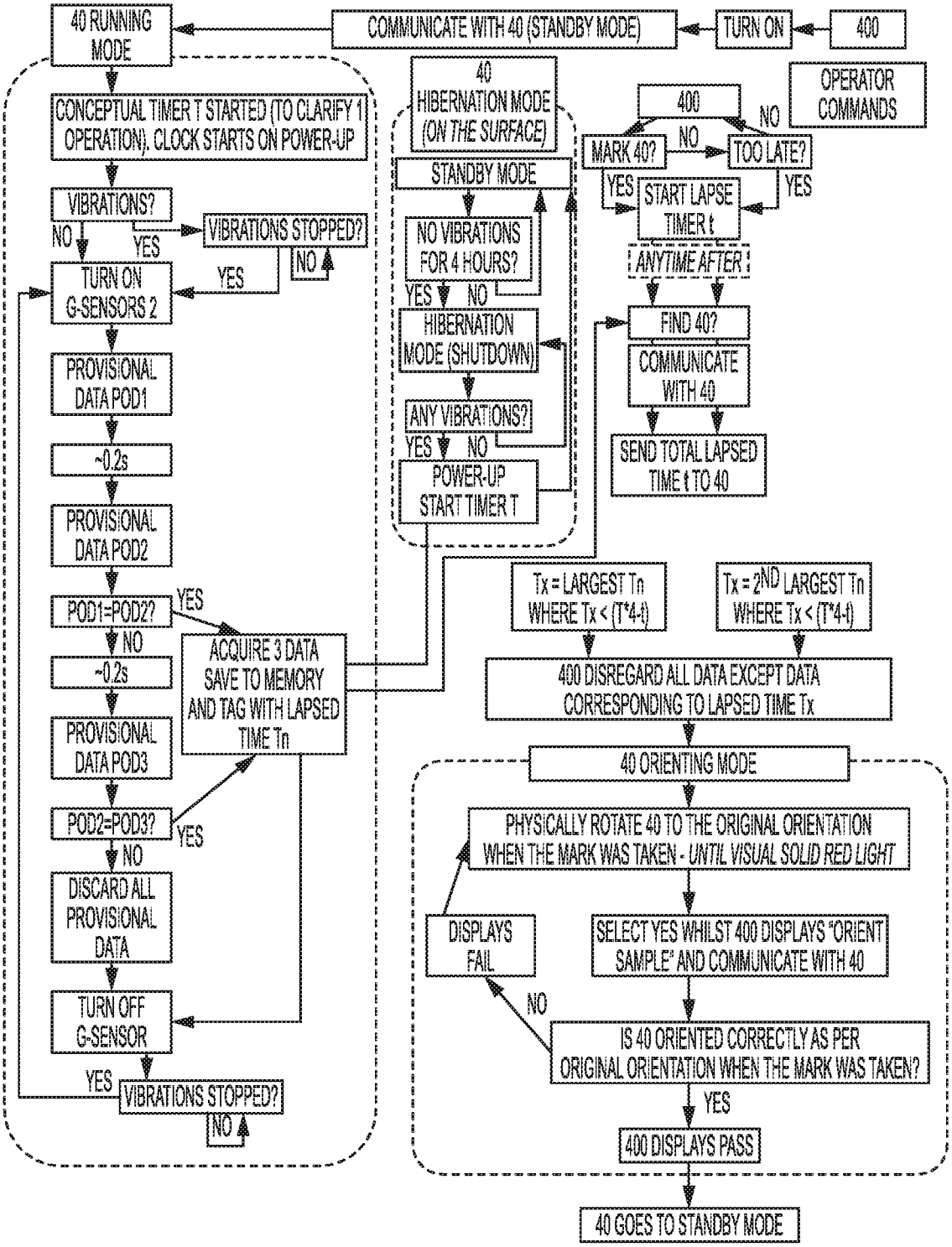
40 RUNNING MODE
COMMUNICATE WITH 40 (STANDBY MODE)
TURN ON
400
CONCEPTUAL TIMER T STARTED (TO CLARIFY 1 OPERATION). CLOCK STARTS ON POWER-UP
VIBRATIONS?
NO
YES
VIBRATIONS STOPPED?
NO
YES
TURN ON G-SENSORS 2
PROVISIONAL DATA POD1
~0.2s
PROVISIONAL DATA POD2
POD1=POD2?
YES
NO
~0.2s
PROVISIONAL DATA POD3
POD2=POD3?
YES
NO
DISCARD ALL PROVISIONAL DATA
TURN OFF G-SENSOR
YES
VIBRATIONS STOPPED?
NO
ACQUIRE 3 DATA SAVE TO MEMORY AND TAG WITH LAPSED TIME Tn
40 HIBERNATION MODE (ON THE SURFACE)
STANDBY MODE
NO VIBRATIONS FOR 4 HOURS?
YES
NO
HIBERNATION MODE (SHUTDOWN)
ANY VIBRATIONS?
YES
NO
POWER-UP START TIMER T
400
NO
OPERATOR COMMANDS
MARK 40?
NO
TOO LATE?
YES
START LAPSE TIMER t
YES
ANYTIME AFTER t
FIND 40?
COMMUNICATE WITH 40
SEND TOTAL LAPSED TIME t TO 40
Tx = LARGEST Tn WHERE Tx < (T*4-t)
Tx = 2ND LARGEST Tn WHERE Tx < (T*4-t)
400 DISREGARD ALL DATA EXCEPT DATA CORRESPONDING TO LAPSED TIME Tx
40 ORIENTING MODE
PHYSICALLY ROTATE 40 TO THE ORIGINAL ORIENTATION WHEN THE MARK WAS TAKEN - UNTIL VISUAL SOLID RED LIGHT
DISPLAYS FAIL
SELECT YES WHILST 400 DISPLAYS "ORIENT SAMPLE" AND COMMUNICATE WITH 40
NO
IS 40 ORIENTED CORRECTLY AS PER ORIGINAL ORIENTATION WHEN THE MARK WAS TAKEN?
YES
400 DISPLAYS PASS
40 GOES TO STANDBY MODE

FIG. 12

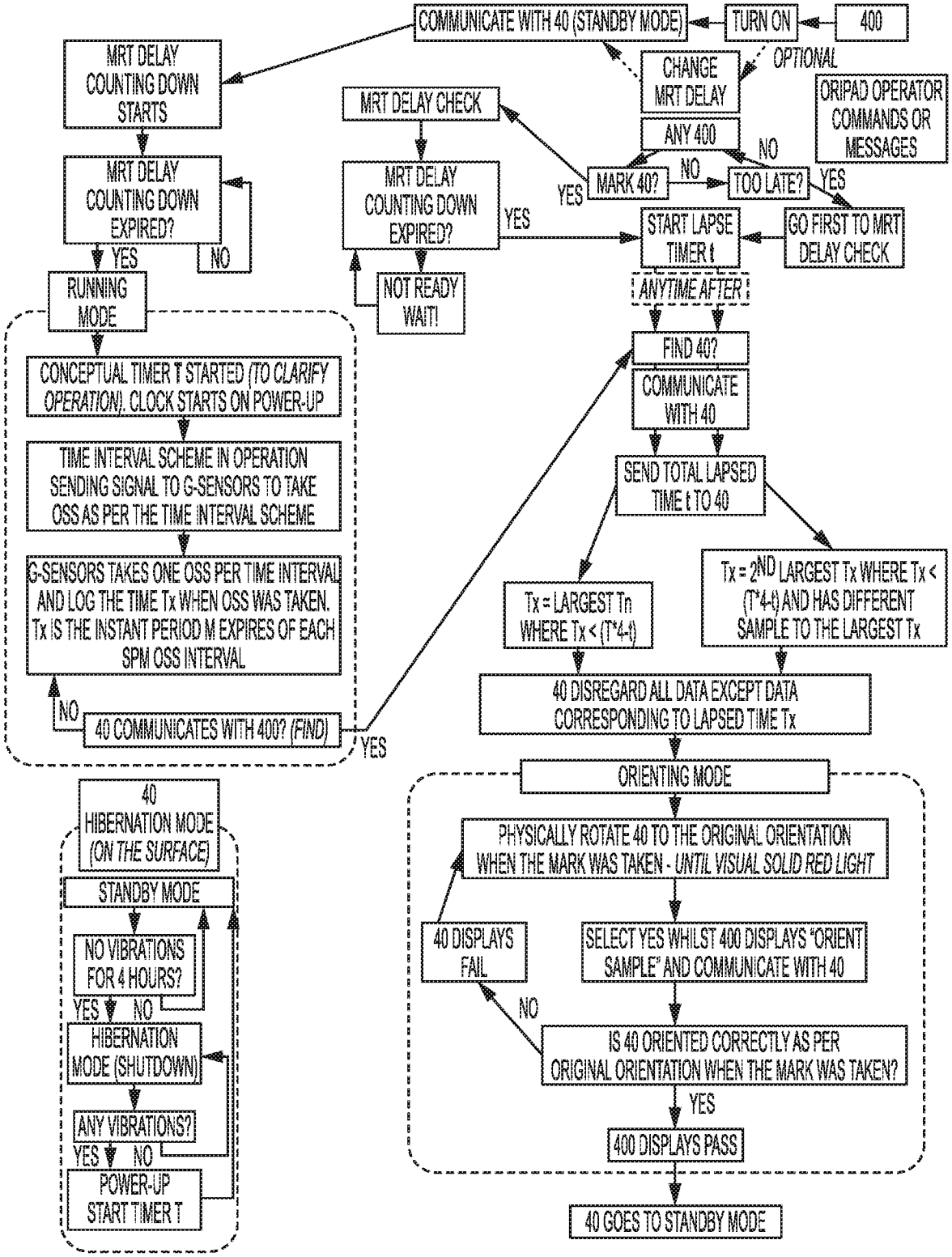
COMMUNICATE WITH 40 (STANDBY MODE)
TURN ON
400
OPTIONAL
CHANGE MRT DELAY
ORIPAD OPERATOR COMMANDS OR MESSAGES
MRT DELAY COUNTING DOWN STARTS
MRT DELAY CHECK
ANY 400
NO
MRT DELAY COUNTING DOWN EXPIRED?
MARK 40?
NO
TOO LATE?
YES
YES
MRT DELAY COUNTING DOWN EXPIRED?
YES
START LAPSE TIMER t
GO FIRST TO MRT DELAY CHECK
YES
NO
NOT READY WAIT!
RUNNING MODE
ANYTIME AFTER t
FIND 40?
CONCEPTUAL TIMER T STARTED (TO CLARIFY OPERATION). CLOCK STARTS ON POWER-UP
COMMUNICATE WITH 40
TIME INTERVAL SCHEME IN OPERATION SENDING SIGNAL TO G-SENSORS TO TAKE OSS AS PER THE TIME INTERVAL SCHEME
SEND TOTAL LAPSED TIME t TO 40
G-SENSORS TAKES ONE OSS PER TIME INTERVAL AND LOG THE TIME Tx WHEN OSS WAS TAKEN. Tx IS THE INSTANT PERIOD M EXPIRES OF EACH SPM OSS INTERVAL
Tx = LARGEST Tn WHERE Tx < (T*4-t)
Tx = 2ND LARGEST Tx WHERE Tx < (T*4-t) AND HAS DIFFERENT SAMPLE TO THE LARGEST Tx
NO
40 COMMUNICATES WITH 400? (FIND)
YES
40 DISREGARD ALL DATA EXCEPT DATA CORRESPONDING TO LAPSED TIME Tx
ORIENTING MODE
40 HIBERNATION MODE (ON THE SURFACE)
PHYSICALLY ROTATE 40 TO THE ORIGINAL ORIENTATION WHEN THE MARK WAS TAKEN - UNTIL VISUAL SOLID RED LIGHT
STANDBY MODE
40 DISPLAYS FAIL
SELECT YES WHILST 400 DISPLAYS "ORIENT SAMPLE" AND COMMUNICATE WITH 40
NO VIBRATIONS FOR 4 HOURS?
YES
NO
NO
HIBERNATION MODE (SHUTDOWN)
IS 40 ORIENTED CORRECTLY AS PER ORIGINAL ORIENTATION WHEN THE MARK WAS TAKEN?
YES
ANY VIBRATIONS?
YES
NO
400 DISPLAYS PASS
POWER-UP START TIMER T
40 GOES TO STANDBY MODE

FIG. 13

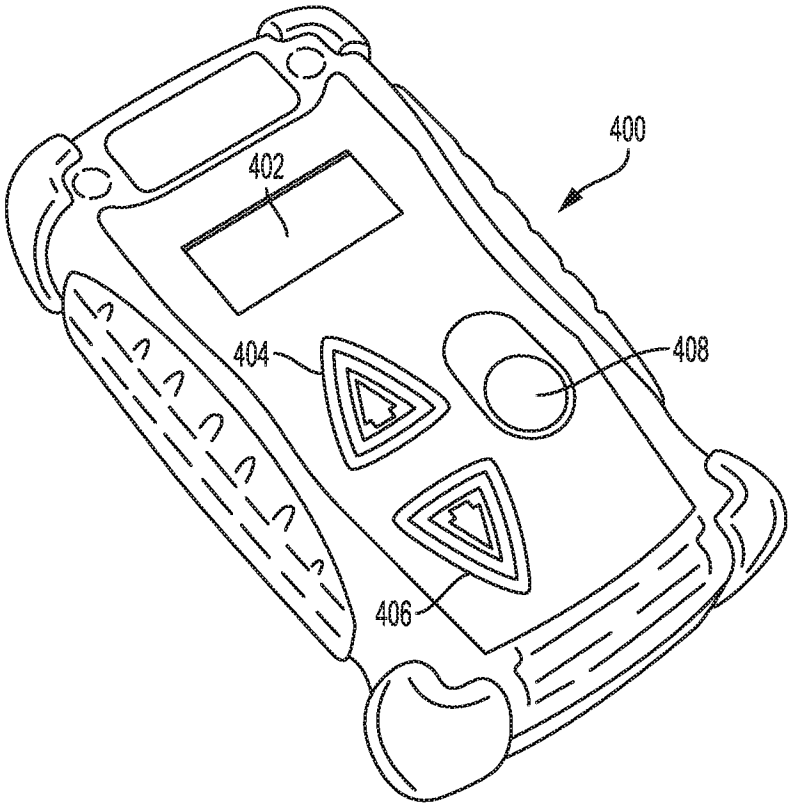

FIG. 14

Electronic Patent Application Fee Transmittal

Application Number:	
Filing Date:	
Title of Invention:	CORE BARREL HEAD ASSEMBLY WITH AN INTEGRATED SAMPLE ORIENTATION TOOL AND SYSTEM FOR USING SAME
First Named Inventor/Applicant Name:	CHRISTOPHER L. DRENTH
Filer:	Joseph P. Anderson/Sharon DeLee
Attorney Docket Number:	36362.0150U5

Filed as Large Entity

Filing Fees for Utility under 35 USC 111(a)

Description	Fee Code	Quantity	Amount	Sub-Total in USD($)
Basic Filing:				
UTILITY APPLICATION FILING	1011	1	320	320
UTILITY SEARCH FEE	1111	1	700	700
UTILITY EXAMINATION FEE	1311	1	800	800
Pages:				
Claims:				
Miscellaneous-Filing:				
Petition:				
Patent-Appeals-and-Interference:				

Description	Fee Code	Quantity	Amount	Sub-Total in USD($)
Post-Allowance-and-Post-Issuance:				
Extension-of-Time:				
Miscellaneous:				
			Total in USD ($)	**1820**

Electronic Acknowledgement Receipt

EFS ID:	40974324
Application Number:	17082877
International Application Number:	
Confirmation Number:	1013
Title of Invention:	CORE BARREL HEAD ASSEMBLY WITH AN INTEGRATED SAMPLE ORIENTATION TOOL AND SYSTEM FOR USING SAME
First Named Inventor/Applicant Name:	CHRISTOPHER L. DRENTH
Customer Number:	23859
Filer:	Joseph P. Anderson
Filer Authorized By:	
Attorney Docket Number:	36362.0150U5
Receipt Date:	28-OCT-2020
Filing Date:	
Time Stamp:	17:05:45
Application Type:	Utility under 35 USC 111(a)

Payment information:

Submitted with Payment	yes
Payment Type	CARD
Payment was successfully received in RAM	$1820
RAM confirmation Number	E20200RH06044098
Deposit Account	
Authorized User	
The Director of the USPTO is hereby authorized to charge indicated fees and credit any overpayment as follows:	

File Listing:

Document Number	Document Description	File Name	File Size(Bytes)/ Message Digest	Multi Part /.zip	Pages (if appl.)
1	Authorization for Extension of Time all replies	36362_0150U5_Authorization_to_Treat.pdf	104454 a5523d6c7479d69b2c4408951411eba572c60bf7	no	1
Warnings:					
Information:					
2	Application Data Sheet	36362_0150U5_ADS.pdf	206296 1f94a55ebbae2b8ed9421bb02de0dfcefedc98f6	no	10
Warnings:					
Information:					
This is not an USPTO supplied ADS fillable form					
3	Oath or Declaration filed	36362_0150U5_Declarations.PDF	289722 bc99b865efd3e990431d00ea6faab1acfb1f3f53	no	3
Warnings:					
The page size in the PDF is too large. The pages should be 8.5 x 11 or A4. If this PDF is submitted, the pages will be resized upon entry into the Image File Wrapper and may affect subsequent processing					
Information:					
4		36362_0150U5_Application.pdf	260643 cb1882b55a37cb2a6f2798cfd5f3cdb8903b850b	yes	35

Multipart Description/PDF files in .zip description

Document Description	Start	End
Abstract	35	35
Claims	33	34
Specification	1	32

Warnings:

Information:

5	Drawings-only black and white line drawings	36362_0150U5_Figures.pdf	1197948 8ecd508dfbf5714c5e70fc88ce21ef87a2898b16	no	12
Warnings:					
Information:					
6	Fee Worksheet (SB06)	fee-info.pdf	35091 4c477c3ff2bae68242ed3330c6277060f900751f	no	2
Warnings:					
Information:					
			Total Files Size (in bytes):	2094154	

This Acknowledgement Receipt evidences receipt on the noted date by the USPTO of the indicated documents, characterized by the applicant, and including page counts, where applicable. It serves as evidence of receipt similar to a Post Card, as described in MPEP 503.

New Applications Under 35 U.S.C. 111
If a new application is being filed and the application includes the necessary components for a filing date (see 37 CFR 1.53(b)-(d) and MPEP 506), a Filing Receipt (37 CFR 1.54) will be issued in due course and the date shown on this Acknowledgement Receipt will establish the filing date of the application.
National Stage of an International Application under 35 U.S.C. 371
If a timely submission to enter the national stage of an international application is compliant with the conditions of 35 U.S.C. 371 and other applicable requirements a Form PCT/DO/EO/903 indicating acceptance of the application as a national stage submission under 35 U.S.C. 371 will be issued in addition to the Filing Receipt, in due course.
New International Application Filed with the USPTO as a Receiving Office
If a new international application is being filed and the international application includes the necessary components for an international filing date (see PCT Article 11 and MPEP 1810), a Notification of the International Application Number and of the International Filing Date (Form PCT/RO/105) will be issued in due course, subject to prescriptions concerning national security, and the date shown on this Acknowledgement Receipt will establish the international filing date of the application.