WILEY

GSM AND UMTS

The Creation of Global Mobile Communication

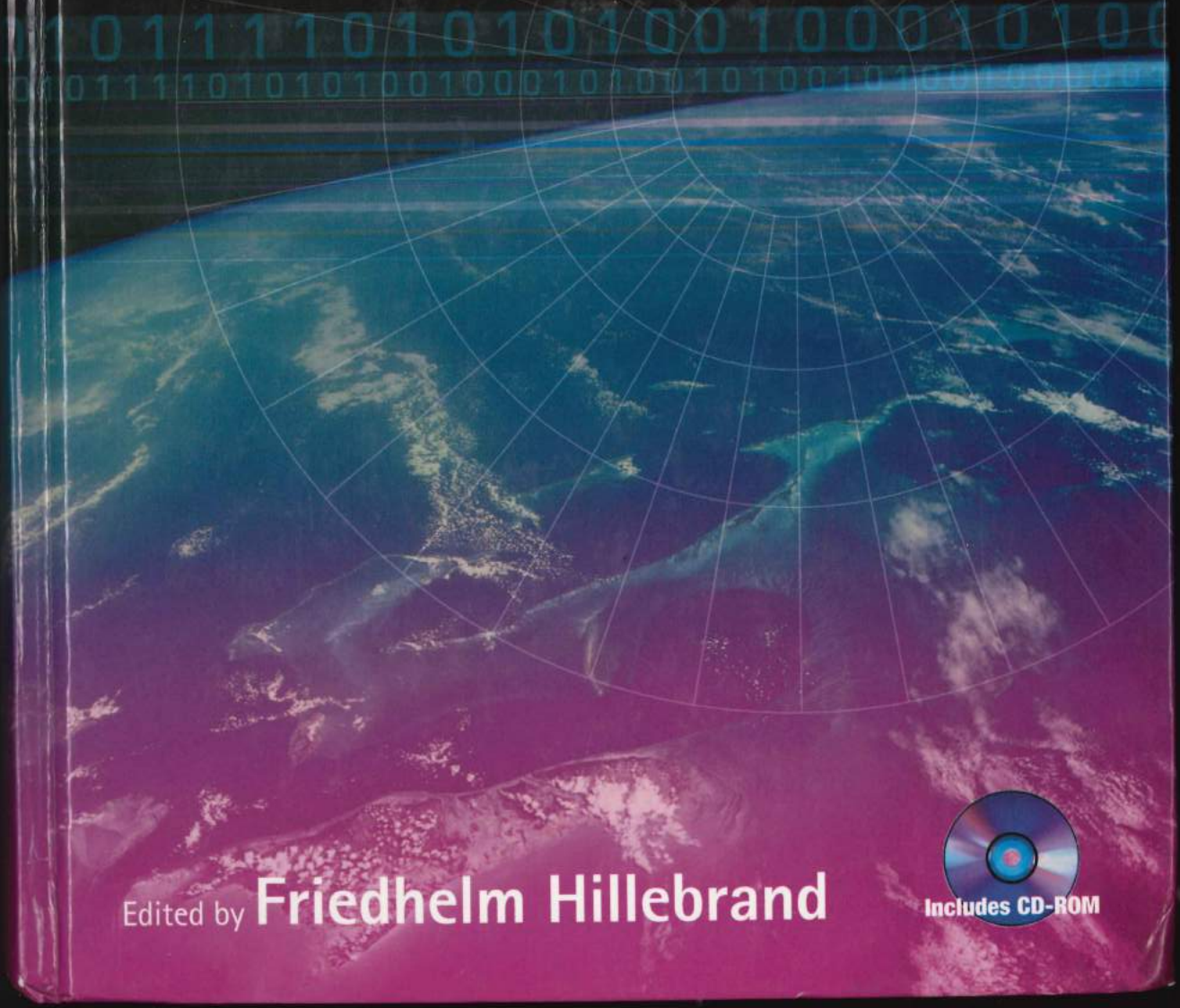

Edited by **Friedhelm Hillebrand**

Includes CD-ROM

GSM and UMTS

The Creation of Global Mobile Communication

Edited by

Friedhelm Hillebrand
Consulting Engineer, Germany

With contributions from 37 key players involved in the work for GSM and UMTS

JOHN WILEY & SONS, LTD

Copyright © 2002 by John Wiley & Sons, Ltd
Baffins Lane, Chichester,
West Sussex, PO19 1UD, England
National 01243 779777
International (+44) 1243 779777

e-mail (for orders and customer service enquiries): cs-books@wiley.co.uk
Visit our Home Page on http://www.wiley.co.uk or http://www.wiley.com

Reprinted January 2002.

All Rights Reserved. No part of this publication may be reproduced, stored in a retrieval system, or transmitted, in any form or by any means, electronic, mechanical, photocopying, recording, scanning or otherwise, except under the terms of the Copyright Designs and Patents Act 1988 or under the terms of a licence issued by the Copyright Licensing Agency, 90 Tottenham Court Road, London, W1P 9HE, UK, without the permission in writing of the Publisher, with the exception of any material supplied specifically for the purpose of being entered and executed on a computer system, for exclusive use by the purchaser of the publication.

Neither the author(s) nor John Wiley & Sons Ltd accept any responsibility or liability for loss or damage occasioned to any person or property through using the material, instructions, methods or ideas contained herein, or acting or refraining from acting as a result of such use. The author(s) and Publisher expressly disclaim all implied warranties, including merchantability of fitness for any particular purpose. There will be no duty on the authors or Publisher to correct any errors or defects in the software.

Designations used by companies to distinguish their products are often claimed as trademarks. In all instances where John Wiley & Sons is aware of a claim, the product names appear in initial capital or capital letters. Readers, however, should contact the appropriate companies for more complete information regarding trademarks and registration.

Other Wiley Editorial Offices

John Wiley & Sons, Inc., 605 Third Avenue,
New York, NY 10158-0012, USA

WILEY-VCH Verlag GmbH
Pappelallee 3, D-69469 Weinheim, Germany

John Wiley & Sons Australia Ltd, 33 Park Road, Milton,
Queensland 4064, Australia

John Wiley & Sons (Canada) Ltd, 22 Worcester Road
Rexdale, Ontario, M9W 1L1, Canada

John Wiley & Sons (Asia) Pte Ltd, 2 Clementi Loop #02-01,
Jin Xing Distripark, Singapore 129809

Library of Congress Cataloging-in-Publication Data

GSM and UMTS : the creation of global mobile communications / [edited by] Friedhelm Hillebrand.
p. cm.
Includes bibliographical references and index.
ISBN 0-470-84322-5
1. Global system for mobile communications. I. Hillebrand, Friedhelm.
TK5103.483 .G7496 2001
384.5′35–dc21 2001045565

British Library Cataloguing in Publication Data

A catalogue record for this book is available from the British Library

ISBN 0470 84322 5

Typeset in Times by Deerpark Publishing Services Ltd, Shannon, Ireland.
Printed and bound in Great Britain by T. J. International Ltd, Padstow, Cornwall.

This book is printed on acid-free paper responsibly manufactured from sustainable forestry, in which at least two trees are planted for each one used for paper production.

This common concept would be based on UMTS service innovation, UTRA and the GSM core network evolution. This result had been prepared and enabled by a network of interested companies active at the global level.

8.2.6.2 The Efficient Global Open Organisation of the UMTS and GSM Specification Work in the Third Generation Partnership Project (3GPP)

8.2.6.2.1 Problem Situation

The implementation of the agreement on the UMTS cornerstones within the existing organisations would have been unmanageable. Three committees in different continents would have worked on the UMTS radio specifications (SMG2, T1P1.5 radio sub-working group, ARIB), several other committees would have worked on network aspects (SMG12 and SMG3, T1P1.5 network sub-working group, TTC). The situation in other key areas like services, SIM, O&M would have been comparably difficult. There would have been no overall decision-making body for conflict resolution. Therefore, the global strategic agreement on the UMTS cornerstones called for a new more efficient global organisational solution, in order to lead the agreement on the cornerstones to a complete and consistent UMTS system specification available in time for the market.

8.2.6.2.2 Proposal to Initiate a Partnership Project for GSM and UMTS

In order to secure the integrity of GSM and UMTS, the cohesion between GSM and UMTS, the ongoing cross-fertilisation between UMTS and GSM and an efficient specification work,

I proposed in the fourth quarter of 1997 to create an ETSI Partnership Project for UMTS and GSM to several network operators and manufacturers. This would provide a single lean working structure and would be open to all committed parties world-wide. This Partnership Project model had been developed in the ETSI reform in 1996, but had never been used.

This Partnership Project for GSM and UMTS was proposed by several GSM network operators at SMG#24 in December 1997.[119] The document "Future Organisation for GSM and UMTS Standardisation", source T-Mobil, Mannesmann Mobilfunk, E-Plus Mobilfunk, aimed at a smooth and efficient standardisation process for the evolution of GSM and towards UMTS. The GSM community is now a global community of operators and manufacturers but has experienced difficulties in opening up for a wider participation in ETSI/SMG. Organisations from outside Europe still cannot become full ETSI members. Even voting rights for associate members in Technical Bodies were not endorsed by ETSI's General Assembly in November 1997. Present working methods with ANSI T1P1 on common GSM specifications are proven as a best possible solution for co-operation with other standard bodies, but they are very complex. This situation calls for a closer and more efficient overall co-operation. The GSM MoU Association and especially the Asian Pacific Interest Group (APIG) of GSM MoU have expressed their desire to participate fully in GSM work and in third generation standardisation and to ensure roaming with Japan.

For these reasons, these three companies proposed the establishment of SMG as the joint working structure among the interested bodies to produce GSM and UMTS standards for ETSI (as an ETSI partnership project) and for the other interested bodies, avoiding parallel work and overhead co-ordination; current budget allocations for ETSI/SMG to be considered

[119] SMG P-97-1062 submitted by T-Mobil, Mannesmann and Eplus.

as an asset for this possible joint working structure; the SMG chairman to carry out an exploratory mission in this sense."[120]

8.2.6.2.3 Endorsement of the Partnership Project by Technical Committee SMG and Mandate for Exploratory Missions

After an intensive discussion and some revisions of the document it was approved by SMG#24 in December 1997.[121] This included a mandate for exploratory missions to Japan and the US. This mission mandate was endorsed by the chairman of the ETSI General Assembly and Board as well as the ETSI director general in a meeting on 13 January 1997 in Sophia Antipolis.

I gave a first progress report to SMG#24bis in January 1999.[122] Then I led – as mandated by SMG – an exploratory mission to Japan on 3–11 February 1998. We found a strong interest in such an intensified co-operation[123]. The following summary was agreed in the meeting on 5-6 February 1998 between ETSI SMG, UMTS Forum, GSMA, ARIB, TTC and ANSI T1P1:

> "1. There is interest to create common specifications for IMT -2000 in the areas of terminals, radio access networks and core networks
> 2. It was recognised that the development of these standards in parallel organisations would be slow and could lead to unnecessary differences
> 3. It was agreed that the best way to proceed would be to further explore the creation of a common working structure (a "Project") to produce common specifications.
> 4. Such a Project, built on agreed common interests, would need appropriate recognition by as well as relationship / membership to the standardisation bodies.
> 5. A procedure for a transition phase into the full implementation of the Project would need to be worked out."[124]

This was the basic agreement for the creation of the Third Generation Partnership Project.

8.2.6.2.4 Lead Taken by the ETSI Board

Creation of the UMTS Globalisation Group

Due to the fundamental importance the creation of such a Partnership Project had for ETSI, the ETSI Board created the UMTS Globalisation Group with a strong SMG participation, who undertook the negotiations for the implementation (see Chapter 9, Section 1). This group was chaired by Karl Heinz Rosenbrock, the ETSI director general.

The interest of the GSM and UMTS community was especially actively supported by three members of the ETSI Board in the UMTS Globalisation Group and in ETSI Board meetings: Wolf Haas of Mannesmann Mobilfunk, Kari Lang of Nokia and Tom Lindström of Ericsson. Their contribution was decisive for the ultimate success, the creation of 3GPP.

Great help for the ultimate resolution came also from the UMTS Forum and the chairman

[120] Extract from the SMG#24 Meeting Report (CD ROM folder B1), Section 3.3
[121] SMG P-97-1154.
[122] SMG P-98-0009.
[123] Report on the Japan mission in SMG P-98-0112.
[124] This summary is contained in SMG P-98-0112 as appendix B13. It was also presented to SMG and the ETSI Board in February 1998.

Thomas Beijer. His diplomacy, bridge building ability and the ability not to give up strategic targets was an indispensable key to the ultimate success.

SMG was represented in the UMTS Globalisation Group by Gunnar Sandegren (SMG vice chairman), Francois Grassot (ECTEL TMS chairman) and me as SMG chairman.

Factions in the UMTS Globalisation Group

There was a very strong polarisation between three factions in the UMTS Globalisation Group. They were not officially organised. Therefore, I will name and describe them briefly:

"*Greater ETSI faction*": they wanted an even stronger and greater role for ETSI in the future in UMTS. They feared a big loss, if SMG the greatest producer of deliverables in ETSI were to "emigrate" to the Partnership Project. They tried to bring non-European partners into ETSI. But after the decision of the ETSI General Assembly to grant these parties only associate membership without voting rights, this was not attractive to the non-Europeans. In the UMTS Globalisation Group they tried in the beginning to block the Partnership Project and later to minimise the scope of work to be transferred to the Partnership Project.

"*Fixed-mobile convergence faction*": this community came from a fixed network background. They hoped to reach fixed-mobile convergence by bringing the relatively independent GSM/UMTS work into an organisation which would be created by melting the existing fixed network committees with SMG under the leadership of the fixed side. Their UMTS vision was dominated by fixed-mobile convergence as a high priority. They lacked in their groups dealing with the fixed network evolution towards third generation a sufficient support and momentum. They wanted to keep GSM and UMTS in ETSI in order to reach their targets and to exploit the SMG momentum and know-how. They tried in the beginning to block the creation of the Partnership Project. Later they tried to limit the scope of the transferred work as much as possible.

"*GSM-UMTS faction*": due to the global acceptance of GSM and the UMTS cornerstones they needed an efficient globally open work structure which dealt with all system aspects. Their prime concern was the progress of their GSM-based UMTS vision. This was complemented with work on the "mobile-fixed convergence". They saw that the number of mobile users would very soon be much bigger than the number of fixed users. They wanted to transfer all GSM and UMTS work into the Partnership Project.

The Decision of the ETSI General Assembly Which Freed the Way for 3GPP

Due to the strong polarisation in ETSI a decision of the General Assembly on principles was needed in September 1998. During this General Assembly I was charged with negotiating a compromise, which was acceptable to the whole ETSI membership. The compromise proposal foresaw:

- to create 3GPP for an initial phase of UMTS;
- to keep GSM in ETSI; and
- to create the ETSI Project UMTS for long-term UMTS aspects.

This proposal was endorsed with a very high majority. It cleared the way to the 3GPP agreement signed in December 1998.

The Success of 3GPP

The first 3GPP Technical Meeting in December 1998 attracted 350 delegates and the level

of participation and contributions remained high. 3GPP produced a common set of Technical Specifications for UMTS based on service innovation, UTRA and the GSM core network evolution. The work was started in December 1998. The Technical Specifications of UMTS Release 99 were completed in December 1999. Some smaller issues were resolved by March 2000. For this purpose all pure UMTS work was transferred from SMG to 3GPP during the first quarter of 1999. The responsibility for the common GSM and UMTS specifications was transferred in the third quarter of 1999. 3GPP was supported by a large number of SMG contributors and SMG leaders. The full-time program managers of the SMG technical support were made available to 3GPP. All proven SMG working methods were made available to 3GPP.

In autumn 1999 ANSI T1P1 and TIA with UWCC proposed the transfer of the remaining GSM work (mainly EDGE, SIM and mobile station testing) to 3GPP in order to ensure the cohesion between the classic GSM and UMTS. The ETSI Board endorsed this proposal based on a review and recommendation of SMG. A Board ad-hoc group was installed with SMG representation. The negotiations between the partners led to an acceptance in principle in May 2000. Therefore, the remaining GSM activities were transferred to 3GPP in mid-2000. ETSI Project UMTS attracted 30–50 delegates and did not have the momentum to produce UMTS specifications. It was closed in 2000.

So finally the SMG vision of 3GPP was realised. The creation of 3GPP ensures the integrity of GSM and UMTS, the cohesion between GSM and UMTS and the cross-fertilisation of GSM and UMTS. 3GPP allows all interested and committed organisations, e.g. regulators, network operators and manufacturers world-wide to participate in the work with equal rights.

8.2.7 Complementary Work to 3GPP in ETSI

8.2.7.1 The Transposition of 3GPP Documents in ETSI Documents

After the creation of 3GPP the question arose, how to "transpose" the 3GPP documents into ETSI documents and whether there is a need for additional documents. 3GPP elaborates and approves common Technical Specifications and Technical Reports, which should be transposed into ETSI documents. I developed the following concept, which was endorsed by SMG and the ETSI Board.[125]

3GPP is acknowledged by the ETSI internal rules as an ETSI Technical Body. Therefore Technical Specifications and Reports approved by 3GPP are to be recognised directly as ETSI Technical Specifications and Reports without another "ETSI internal approval". They can be published directly by the ETSI Secretariat.

Besides Technical Specifications and Reports there are in ETSI European Standards (ENs). They are approved by an ETSI Technical Body and then in a second step by the whole ETSI membership with the assistance of the National Standardisation Organisations.

A broad demand survey[126] regarding the demand for ENs in autumn 1999 showed that a demand for ENs exists for the purposes of the R&TTE-Directive only (access of terminals to the market). All other demand can be covered by Technical Specifications.

These ENs should be elaborated and approved by a "pure" European Committee (e.g.

[125] P-99-751.
[126] P-99-736.

Technical Committee SMG). In this process 3GPP results should be referred to as much as possible.

8.2.7.2 The Elaboration of European UMTS/IMT-2000 Harmonised Standards for Terminals Pursuant to the R&TTE Directive

In order to avoid barriers to international trade the European Commission requested ETSI in a letter in December 1999 to produce European harmonised standards pursuant to the R&TTE Directive, which "would typically describe emission masks ensuring proper coexistence of the different members of the IMT-2000 family and that it would be aligned with similar standards outside the Community".

I was charged by SMG with forming a small delegation and to talk to the different parties involved to explore a way forward. A strategic framework and several technical documents were elaborated and endorsed by SMG. The principles were endorsed by the ETSI Board. A joint ERM/SMG Task Force was formed in May 2000 to do the technical work.

The strategic framework document developed by me and endorsed by Technical Committee SMG[127] identifies the regulatory requirements and contains the following key targets for the standardisation work:

- ETSI needs to produce harmonised standards for all IMT-2000 systems.
- The work can reference ITU, 3GPP2 and TIA specifications directly. There is no need to transpose these into ETSI documents.
- The harmonised standards will be produced by a joint ERM/SMG Task Force and EP DECT.
- The first release of the harmonised standard needs to be completed ideally in October 2000.

8.2.7.3 Technical Committee MSG, the New Body for ENs

The work, which remains in ETSI, is the elaboration and approval of ENs needed for regulatory purposes. For this task I proposed to create a new body Technical Committee MSG (Mobile Standards Group) and its terms of reference. This was endorsed by SMG[128] and approved by the ETSI Board. It started in June 2000.

8.2.7.3.1 EP SCP (ETSI Project Smart Card Platform)

The generic smart-card work and the work on common lower layer functions for smart-cards of all 3G systems was transferred to EP SCP which was created in March 2000.

8.2.8 Conclusions

During the period from April 1996 to February 1999 ETSI Technical Committee SMG created a UMTS strategy consensus on a vision which was based on services' innovation, GSM evolution and Internet orientation. All basic concepts for the UMTS standard were

[127] SMG P-00-194.
[128] SMG P-00-183.

elaborated and agreed. Very difficult decisions like the UTRA decision were taken. On this basis a set of reports and raw specifications were produced. The creation of a globally open efficient new working structure, the 3GPP, was initiated and brought to life. All UMTS and GSM work was transferred to 3GPP. The necessary changes in ETSI were initiated. Then the Technical Committee SMG was closed at the end of July 2000 since its mission was fulfilled.

Ex. 1101
APPLE INC. / Page 9 of 44

Chapter 9: The Third Generation Partnership Project (3GPP)

Section 1: The Creation of 3GPP

Karl Heinz Rosenbrock[1]

Having read the title, it should not surprise you that this section deals with the creation of the Partnership Project for the standardisation of a Third Generation Mobile Communications System (3GPP).

Why, you may ask, in a history book about the GSM and UMTS development, do I want to talk about the establishment of a partnership project? Isn't it the most natural thing to do? This is, of course, a stance an insider can take today – after nearly 30 months of 3GPP's creation and the smooth and successful running of this project.

As this section will eventually show, it took quite some time, filled with tough and even passionate discussions, before the goal was achieved. Approaching this idea from a rather philosophical point of view, one should not be too surprised about the big efforts needed, because already the old Greek ancestors knew that "prior to being successful the Gods will demand some sweat"...[2]

This section starts with some general considerations leading the European Telecommunications Standards Institute (ETSI) membership towards a global approach in standardisation and then deals with the establishment of an ad hoc group of the ETSI Board (UGG = UMTS Globalisation Group) to address the matter of global standardisation in this context and the related meetings and discussions. Afterwards, the 3GPP will be described in a rather general manner, highlighting how it works, who the stakeholders are and dealing with the results achieved so far. The section is rounded up with the relationship towards the International Telecommunication Union (ITU) and other initiatives as well as a few concluding remarks.

9.1.1 First Approaches to Globalisation

The re-engineering process ETSI, the "Excellent" Telecommunications Standards Institute in Europe, undertook in the years 1995/1996 – only 7 years after its creation – resulted in among others a kind of mission statement for the Institute: "Making international standards happen first in Europe".

[1] The views expressed in this section are those of the author and do not necessarily reflect the views of his affiliation entity.

[2] One of my cruel translations of a German idiom "Vor den Erfolg haben die Götter den Schweiß gesetzt"...

Classical examples of ETSI success stories that witness this slogan are among others: the Global System for Mobile Communication (GSM); Digital Enhanced Cordless Telecommunications (DECT); Digital Audio Broadcasting (DAB); Digital Video Broadcasting (DVB); Terrestrial Trunked Radio (TETRA), just to name a few of them.

In positioning ETSI in the standardisation landscape, it became clear that the trends and changes towards globalisation, convergence and new value chains would lead to the creation of a huge volume of standards making space. Furthermore, it was not tenable for ETSI to try to fill the entire space. Choices had to be made. In addition, the investigations revealed that collaboration by means of appropriate partnerships could be a promising formula.

ETSI consciously withstood the temptation to become a global standards body. But it has always undertaken great efforts to ensure that all of its products, i.e. deliverables, such as European Norms (ENs), ETSI Standards (ESs), ETSI Technical Specifications (TSs), etc. satisfy real market needs and have the potential to become global standards. The ITU remains ETSI's global partner of choice. But the fast moving markets were expected to require ETSI to supplement this with various international partnerships on a case-by-case basis.

The high level task force that undertook the ETSI review in 1995/1996 advised the Institute that it had to sustain its core competence of making high quality standards for large and complex telecommunications systems. But, if neat demarcation lines are going to cease to exist, then ETSI must inevitably move more into the IT, audio-visual and other fields. It should do this in good partnerships, where other Standards Developing Organisations (SDOs) or appropriate fora and consortia are willing to co-operate with ETSI. Retrenchment by ETSI was not considered to be in Europe's interest.

Other results of interest here, of ETSI's re-engineering process after 7 years of existence were:

- to reduce the hierarchical structure in the Technical Organisation to a minimum;
- to delegate power (of approval, etc.) to the Technical Bodies where the main work is being done;
- to focus on semi-autonomous projects;
- to aim at proper project management;
- to allow the creation of ETSI Partnerships Projects (EPPs);
- to streamline and rationalise the ETSI Working Procedures;
- to improve the use of electronic tools for further rationalisation and innovation;
- to use audio and video conferencing;
- to broadcast inter-active meetings;
- to increase standards promotion activities;
- to facilitate and to promote direct electronic access to ETSI documents and deliverables free of charge.

Regarding ETSI's external relations the advice given was: that ETSI should add to its strength through partnerships in complementing areas, ceding some sovereignty on a case-by-case basis to achieve common purposes.

ETSI should continue its dialogue (in GSC/RAST) with its major regional/national counterparts, with the objective of strengthening arrangements for effective co-operation and be prepared to enter into bilateral co-operation on a case-by-case basis.

With this short excerpt of some basic results stemming from the ETSI re-engineering

Ex. 1101
APPLE INC. / Page 11 of 44

process undertaken in the middle of the 1990s, we have the fertile soil, i.e. the driving forces, motivations, basic elements needed in order to establish a partnership project.

The tremendous success story of GSM may have even led some ETSI members to believe that it would have been the most natural choice to repeat this with the third generation mobile communication system within ETSI, too. But for insiders it became clear that such a success could not be guaranteed another time.

After having dealt with the ETSI internal change in orientation from Europe-centric to international and global, let's have a short look at the first attempts at getting into closer contact with our partners. Let's start with our American friends.

In Sections 5.3 and 5.4 the standardisation work on PCS 1900 in ANSI T1P1 as well as the new co-operation between ANSI T1P1 and ETSI Technical Committee SMG are described.

The relationship between ANSI T1P1 and ETSI TC SMG started in 1996/1997. Both Technical Committees were working on independent sets of Technical Specifications, i.e. GSM 1900 in the US and GSM 900/1800 in Europe, etc. Parallel working with different speeds includes the risk of differences that may result in incompatibilities. In order to avoid these difficulties both SDOs agreed to merge the two independent sets of specifications into a common one and to further develop it commonly using a co-ordinated approach, i.e. each work item and the results were approved in both committees and incorporated into the common specifications.

Despite the fact that the co-operation between T1P1 and SMG was excellent, it suffered a little from the fact that the double approval process and the difficult co-ordination process at several levels, e.g. first in T1P1 and then within SMG, were not very efficient and too time consuming. One of the lessons learnt from this exercise was: Why don't we really co-operate, i.e. work together, from the very beginning – then avoiding any type of "approval ping-pong"? This was another good reason to consider what and how to improve the standardisation work for the third generation…

Now let's have a look at the relationships with our friends from Asia.

In the People's Republic of China, network operators had implemented large GSM networks based on existing ETSI standards. In order to avoid divergence, Chinese authorities (RITT) joined ETSI as an associate member and participated fully in the work of ETSI TC SMG since 1997. Thus, it was possible to fully integrate the Chinese requirements into the standardisation process within TC SMG in order to secure the integrity of GSM between China and the "rest of the world".

In the meantime – with the Universal Terrestrial Radio Access (UTRA) decision in January 1998 – contacts with Japanese ARIB/TTC colleagues had been established within ETSI TC SMG. These contacts had started in spring 1997, 1 year earlier

Discussions on the Technical Committee working level at the end of 1997 and the beginning of 1998 between ETSI, ARIB/TTC, and T1P1[3] led to the hope that the creation of a common UMTS concept applicable in all territories – and thus de facto globally – was possible. Such a concept could be based on UMTS service innovation, UTRA and the GSM core network evolution.

In other words, there was from the beginning a lot of goodwill available from all sides to do/undertake something in common. But how to do it? It became clear that to perform the UMTS standardisation within the three (or more) existing organisations would have been nearly unmanageable. Three committees in different continents could have developed the

[3] More information is in Chapter 8, Section 8.2.6.2.3

Ex. 1101
APPLE INC. / Page 12 of 44

UMTS radio specifications whilst several other committees would have worked on network aspects. The situation in other key areas, such as services, Subscriber Identification Module (SIM), and Operation and Maintenance would have been equally difficult. Furthermore, there would have been no overall decision-making body for the resolution of possible conflicts. All these difficulties sketched out here simply called for a new and much more effective global organisational solution.

As the friends from ARIB were quite interested in developing a common radio interface whose key parameters had been agreed in Japan and in the UTRA radio interface decision in January 1997, a delegation from the ETSI TC SMG undertook an exploratory mission to Japan on 5 and 6 February 1998 in order to find out whether or not a kind of co-operation with them would be possible. Further information is given in Chapter 8, Section 8.2.6.2.3.

These informal contacts on the working level revealed that there was a good resonance on the Japanese side. In an association like ETSI, there is not only the working level, there are other levels as well, e.g. the General Assembly (GA), the highest ETSI authority, and the Board, a body with some 25 clearly identified powers delegated by the GA. In 1997/1998 the first ETSI Board could have looked back at about 18 months of existence and had, of course, to play its role… Without acting like a "donkey who eats up the grass that has grown over (above) an old and nasty story,[4] one has to admit that the communication/co-operation between the ETSI Board and the ETSI TC SMG suffered a little bit from irritations, misunderstandings, mal-perceptions, etc. In other words, it was far from optimum at that time… Nevertheless, there was a role to play from a more political strategic point of view. And now the question was what to do in order to make something useful happen?

What do you do, when you do not exactly know how to proceed? You create a committee. At least the politicians are supposed to do so. Well, within ETSI it was the Board that – after an interesting extraordinary meeting at the Frankfurt Airport on 27 February 1998 – decided to create an ETSI UMTS Globalisation Group (UGG), i.e. not a committee but an ad-hoc group, but what is the difference? The next section will tell you more.

Coming back to the extraordinary ETSI Board meeting on 27 February 1998, to simply mention "it was an interesting one" is, of course, correct, but an understatement. We had already quite an emotional ETSI Board#11 meeting dealing, with among other items, the question of how to standardise UMTS in the most useful manner. As no consensus could be achieved, a specially convened Board meeting was required.

At the beginning, a recall of the ETSI Board#11 results concerning the third generation mobile standardisation was made. In addition, reports from ETSI TC SMG were given, especially about their exploratory contacts with potential partners.

Regarding the ETSI strategy and policy for the standardisation of a third generation mobile communications system, there were quite differing opinions and fears expressed. The two extreme positions were something like:

- create a new and independent 3G forum; and
- keep all 3G standardisation within ETSI.

With all shades of compromise in between – among others why not use an ETSI Partnership Project (EPP)? By the way, at that time it was not very clear what an EPP was. There existed a general description in the ETSI Rules of Procedure, but it dated from 1995/1996 and covered some basic characteristics only, allowing for a great variety of different implementa-

[4] Wenn endlich Gras über eine (traurige) Angelegenheit gewachsen ist, kommt ein Esel, der das Gras auffrißt.

tions… Thus, asking three people about their interpretations, one could well be confronted with four descriptions…

The result of this heated discussion was the idea to create a kind of starter group, UGG. And the Board agreed that the group should consider the requirements for the globalisation of GSM-based UMTS and make recommendations as to how this may be achieved.

9.1.2 The ETSI UMTS Globalisation Group

The UMTS Globalisation Group (UGG) was an ad-hoc group established by the ETSI Board from where it got its first draft Terms of Reference. They have been refined since based on the experience gained in the meantime.

9.1.2.1 Terms of Reference of UGG

In the following you will find the UGG Terms of Reference as revised during the first UGG meeting and approved by correspondence by the ETSI Board.

9.1.2.1.1 Objectives of the Group

The objective of this Group was to consider the actions, which are required to enable UTRA and "GSM-based" UMTS specifications to be prepared and promoted in a manner, which makes them attractive to global partners such that they will be implemented world-wide.

To achieve this objective the Group should:

- provide strategic management of those activities which fall within the scope of this Group;
- investigate the development of relationships with external partners and identify their expectations for UMTS;
- propose an organisational structure which meets the expectations of the Institute and external partners, taking into account the recommendations of the ETSI GA ad-hoc Group on fixed/mobile convergence (after their approval by the ETSI GA);
- consider what transition arrangements are necessary to move towards a new organisational structure;
- propose a mechanism, which enables all active partners to take part in the approval of related specifications.

In their work the Group may need to take into account the following factors:

1. Management characteristics (*How do stakeholders define and approve strategic direction? How is the "work-programme" defined and approved to carry out the strategic objectives?*)
2. Business model (*How are "regional" priorities, based on their business model, defined such that the standards are truly global?*)
3. Financial model (*How are "overhead" costs assigned?*)
4. Operating principles (*How is actual standardisation work carried out? How are the standards approved in different regions/countries?*)
5. Maintenance work (*How are improvements, maintenance of standards performed?*)
6. European fall-back (*What is the fall-back solution for Europe if there are disagreements at*

- unanimously requested the ETSI Board (through its UMTS Globalisation Group) to complete the negotiations with potential partners and to oversee the creation of the Partnership Project;
- unanimously requested the ETSI Board to agree and maintain on behalf of ETSI the final versions of the Partnership Project Description, the Partnership Project Working Procedures, and the Partnership Project Agreement;
- unanimously authorised the director-general to sign the Partnership Project Agreement.

9.1.2.4.14 Happy End in Copenhagen

It was in Copenhagen where the last 3GPP preparatory meeting with all six OPs took place on 2–4 December 1998.

Here, the final fine-tuning of the 3GPP documentation was achieved. In addition, the 3GPP agreement[8] was signed (in a nice framework provided by the host, TeleDenmark) by the following OPs: ARIB, ETSI, T1, TTA, and TTC.

Unfortunately, the partners from CWTS (China) were not authorised to sign the 3GPP agreement yet. Furthermore, owing to the fact that the UMTS Forum was unable to participate in Copenhagen, they were prevented from co-signing the 3GPP agreement as a first Market Representative Partner (MRP).

During that Copenhagen meeting, another discussion ensued about the role the MRPs should play. Finally, it was concluded that the high competence of MRPs should be used in order to identify market requirements, thus enabling 3GPP standardisation to meet the needs of the market. An MRP is an organisation invited by the OPs to participate in 3GPP with the objective of offering market advice to 3GPP and to bring into 3GPP a consensus view of market requirements.

9.1.3 What is 3GPP?

The 3GPP is a global standardisation initiative created in December 1998. Its task was to develop a complete set of globally applicable Technical Specifications for a third generation (3G) mobile telecommunications system based on the evolved GSM core network and an innovative radio interface known as UTRA. The Project is based on a concept devised by ETSI aimed at facilitating better co-operation between regional standards organisations, fora and other industry groupings. 3GPP is a collaborative activity between officially recognised SDOs, with the participation of other industry groups and individual members.

Partnership in 3GPP is open to all national, regional or other SDOs, irrespective of their geographical location – within the project the participating SDOs are referred to as OPs. The OPs may invite MRPs to participate: these may be any organisation from anywhere in the world that can offer market advice to 3GPP and bring a consensus view of market requirements that fall within the project's scope. Individual membership is open to companies and organisations within the communications industry that are active members of one of the OPs. The truly global nature and the breadth of the market interest in the task of specifying this 3G system is evident from the identity of the 3GPP partners (see further in sub-paragraph 9.13.2) and all agree that 3GPP is proving a highly successful initiative.

[8] The 3GPP Agreement and the 3GPP Project Description can be found on the attached CD-ROM in folder C1.

The 3GPP has no legal status. Ownership (including copyright) of the specifications and reports it produces is shared between the partners. The 3GPP process includes a conversion (transposition) of the project's output into official standards and reports by one or more of the OPs.

The specifications being prepared by 3GPP are evolved in part from the enormously successful GSM standard, which is currently (February 2001) serving over 400 million subscribers in more than 140 countries. Building on this massive installed base, the system being specified by 3GPP will be an attractive upgrade path for existing operators and users. It also has an assured compatibility with GSM – good news for both operators and users who are unable, or unwilling, to upgrade to 3G.

Paramount among the 3GPP specifications is the definition of UTRA, the innovative radio access technology that is the key to the new system's high data rates and dramatically improved performance. UTRA is spectrum-efficient and supports FDD and TDD modes. This interface has been accepted by ITU as a member of the IMT-2000 family – or more correctly, as *two* family members: IMT-DS, the FDD mode; and IMT-TC, the TDD mode. IMT-2000 family membership requires the ability for users to roam globally and seamlessly, which implies interoperability with other family members: 3GPP thus co-operates closely with the 3GPP2 project which is specifying another family member, a 3G CDMA system based on an evolution of the ANSI-41 architecture.

9.1.3.1 How Does 3GPP Work?

3GPP has been designed to minimise delays and inefficiencies. As a result, it has a "flat" organisational structure and a large degree of distributed autonomy. Overall project planning and co-ordination is the responsibility of the PCG, with input primarily from the OPs, guided by the MRPs. It is mainly at this level that regulatory requirements, provided by the telecommunications administrations and governments around the world, are taken into account.

The development of the specifications is performed by TSGs and their subordinate working groups. Here, the main participation is by technical experts from the individual members of the OPs. Individual members in their capacity as ITU members are also responsible for carrying the results of the 3GPP work to the ITU.

At the time of the creation, 3GPP had structured around four principal aspects of the 3G system being defined as TSGs:

- TSG CN: core network
- TSG RAN: radio access network
- TSG SA: services and systems aspects
- TSG T: terminals

Each TSG is authorised to develop and approve specifications and reports within its scope, and TSG SA also has a role of co-ordinating the work of the TSGs at a more detailed level than the PCG. The result is a process that is able to rapidly produce and approve specifications and reports in response to the needs of the market, although it is important to note that the deliverables do not have a formal status until they have been transposed by one or more of the OPs.

The formal status is necessary for regulatory and other purposes in the various regions, and all the OPs have committed themselves to complete this process rapidly. Each OP will apply

its own procedures, appropriate to their respective regions. As the official European SDO within 3GPP, ETSI recognises the 3GPP output as ETSI Technical Specifications and ETSI Technical Reports without a need for any further endorsement within the Institute. This means that the 3GPP documents are published – within a matter of a few weeks – as identical text directly as ETSI deliverables. In addition, ETSI is transposing, i.e. adapting, a few of the initial 3GPP specifications into ENs for specific European regulatory requirements. This is happening in parallel with the publication of the initial Technical Specifications and will not impede the implementation of 3G in Europe.

9.1.3.1.1 Electronic Working

3GPP has taken a leading role in changing the traditional ways of standards making. A very heavy dependence is now placed on electronic working, both outside and within meetings, advancing a trend that started in ETSI a year or two ago. This means that paper copies of draft documents have been almost entirely eliminated, saving time and expense, and making a significant contribution to the environment.

Given that 3GPP has participants from all over the world, the use of the Internet, e-mail exploders and other such facilities have proved invaluable for distributing and sharing information, working drafts and so on. Delegates to meetings had already become used to downloading working documents from the Internet and having updates to the documents distributed in meetings on CD-ROM. But in recent months, in meetings around the world, participants have experienced the benefits of a local area network (LAN) solution as the latest step in improving working methods. ETSI's headquarters premises already have LANs in all its meeting rooms, but most other venues currently rely on temporary LANs (wired or radio), using equipment and support kindly donated by individual members.

Such facilities permit delegates to access all the meeting documents electronically from their laptop computers. As a result, the huge burden of producing paper copies (as many as 10 000 pages per delegate for some meetings) can be eliminated. Delegates can access new documents as soon as they are available, rather than having to wait for paper copies to be made or for the documents to be distributed by other means, such as diskette or CD-ROM.

9.1.3.1.2 Project Support

For administrative and support purposes the 3GPP Partners have established a Mobile Competence Centre (MCC) which is hosted by ETSI at its premises in Sophia Antipolis, Southern France. The MCC was created in March 1999 to provide support not only to the 3GPP but also to ETSI's own studies in mobile technologies. A full description of MCC including the financing is given in Chapter 15, Section 3.

9.1.3.2 Who are the Stakeholders in 3GPP?

3GPP has attracted a very strong commitment from organisations and companies around the world, reflecting the truly global nature of the project. There are currently six OPs (in alphabetical order):

- The Association of Radio Industries and Businesses (ARIB), Japan

- The China Wireless Telecommunication Standards Organisation (CWTS)
- The European Telecommunications Standards Institute (ETSI)
- Committee T1, US
- The Telecommunications Technology Association (TTA), Korea
- The Telecommunication Technology Committee (TTC), Japan

ARIB, ETSI, T1, TTA and TTC can be considered as founding OPs of 3GPP who signed the agreement in Copenhagen on 4 December 1998. CWTS signed the 3GPP agreement during the OP meeting #1 in Seoul on 8 June 1999.

In addition to the six OPs mentioned above, there are now seven MRPs (in chronological order of joining 3GPP):

- The UMTS Forum (December 1998 at Antibes/Juan les Pins)
- The Global Mobile Suppliers Association (GSA) (February 1999 at Cannes)
- The GSM Association (OP meeting #1 in Seoul)
- The Universal Wireless Communications Consortium (UWCC) (September 1999 at Geneva)
- The IPv6 Forum (OP meeting #2 at Sophia Antipolis)
- The Multimedia Wireless Internet Forum (MWIF) (during OP meeting #3 in Beijing)
- The 3G.IP Focus Group (during OP meeting #3 in Beijing)

In addition, by January 2000 3GPP had 284 companies participating as individual members, and the numbers continue to grow; their affiliation with the OPs is as follows:

ETSI (Europe) 173 companies	(61%)
T1 (US) 22 companies	(8%)
ARIB (Japan) 37 companies	(13%)
TTC (Japan) 18 companies	(6%)
TTA (Korea) 25 companies	(9%)
CWTS (China) nine companies	(3%)

The brackets at the end indicate the percentage of individual OP members active in 3GPP. From this, one can deduce that the representation from the three continents involved in 3GPP is as follows:

Asia	89 (31%)
Europe	173 (61%)
North America	22 (8%)

9.1.3.2.1 Leadership positions

During the first meeting of the 3GPP PCG and the OPs in Fort Lauderdale, US in March 1999, a lot of effort was undertaken in order to establish a good regional balance regarding the leadership positions within 3GPP. Fortunately, that goal was achieved as can be seen in the following:

PCG for the first 2 years: chairman from Europe, vice-chairmen from Asia (ARIB) and North America.

From 2001 on there will be an annual rotation. For 2001 the PCG chairman comes from Asia (ARIB).

Regarding the four TSGs: CN, RAN, SA&T, with one chairman and two vice-chairmen each, we can register the following situation as of the end of the year 2000:

- Europe has five (of 12) leadership positions;
- North America has four (of 12) leadership positions;
- Asia has three (of 12) leadership positions.

9.1.3.3 3GPP Meetings

Regarding the meetings within 3GPP, we have to distinguish basically between three different levels:

- PCG/OP meetings;
- TSG meetings; and
- WG meetings underneath the TSG level.

PCG/OP meetings are not that frequent. Until April 2001, the following meetings took place:

PCG#1	1–4 March 1999 in Fort Lauderdale, US
PCG#2	6–7 July 1999 at Sophia Antipolis, France
PCG#3	19–20 January 2000 at Sophia Antipolis, France
PCG#4	17 July 2000 in Beijing, China
PCG#5	14 November 2000 in San Francisco, US
PCG#6	10 April 2001 at Sophia Antipolis, France

The composition of PCG, the project co-ordination group, is as follows:

Six OPs with a maximum five delegates each;
Seven MRPs with a maximum of three delegates each;
Five TSGs with one chairman and two vice-chairmen each;
Two observers with one delegate each;
ITU-T and -R with three delegates as special observers,
One secretary, Mr Adrian Scrase.

Thus – ignoring any guests – the PCG may encompass up to about 70 delegates. This high amount of delegates within PCG – although most of the delegations do not send the maximum number of delegates allowed – does not correspond anymore to the "light structure" originally intended.

Decisions within PCG are taken by consensus among the OPs. In "unavoidable cases" a vote may be taken.

Most of the OP meetings were organised in connection with the PCG meetings as follows:

OP#1	27–28 May 1999 in Seoul, Korea
OP#2	18 January 2000 at Sophia Antipolis, France
OP#3	18–19 July 2000 in Beijing, China
OP#4	15 November 2000 in San Francisco, US
OP#5	11 April 2001 at Sophia Antipolis, France

Ex. 1101
APPLE INC. / Page 19 of 44

The OP meetings are composed of delegations stemming from the participating OPs. They are normally chaired by a representative of the hosting OP. The delegation number is not fixed, but as most OP meetings are joined with a PCG meeting, the delegations from the OPs do not differ very much from PCG meetings with the difference that the TSG chairmen and vice-chairmen are now part of the OP delegations. Up to now the MRPs have been invited to participate as guests within the OP meetings.

There is a 3GPP Funding and Finance Group, chaired by Mr Phil Davidson, active and reporting to the OP meetings providing appropriate advice.

The TSGs meet quarterly in parallel (CN, RAN, T) and in sequence with SA. The TSGs have met 11 times since the creation of 3GPP.

TSG#1	Sophia Antipolis (December 1998), France
TSG#2	Fort Lauderdale (March 1999), US
TSG#3	Yokohama (April 1999), Japan
TSG#4	Miami (June 1999), US
TSG#5	Kyongju (October 1999), South Korea
TSG#6	Nice (December 1999), France
TSG#7	Madrid (March 00), Spain
TSG#8	Düsseldorf (June 00), Germany
TSG#9	Hawaii (September 00), US
TSG#10	Bangkok (December 00), Thailand
TSG#11	Palm Springs (March 01), US

At those TSG meetings between 400 and 600 delegates can be expected. During the recent ones we have been closer to 600 – quite a challenge from the logistics point of view!

The working groups belonging to the TSGs may even meet more frequently. Therefore, it does not make much sense to refer to them here in more detail. But it should be clearly pointed out that the bulk of the 3GPP work is being done there…

9.1.3.4 What Progress has been Made in 3GPP?

In little over 1 year, the project had already produced the first series of more than 300 specifications and reports in what is called Release 99. The specifications in Release 99 include those that define UTRA, the radio interface, and these have been submitted by the 3GPP OPs to the ITU-R for reference in its IMT.RSPC Recommendation, which forms the compendium of 3G terrestrial radio interfaces.

In addition to UTRA, this initial release of specifications includes the definition of around 50 services including multimedia messaging, plus architectural aspects, other features and enhancements. Release 99 has enabled industry to proceed with the development of the system, which, as noted earlier, is planned to come into service in Japan in 2001, with progressive launches around the world thereafter. These incredibly short timescales have necessitated an extremely efficient, and yet open, specification process. The fact that around 300 vital specifications have been produced so quickly confirms both the commitment of all concerned and the effectiveness of the 3GPP process.

The Project's specification activities will continue as it develops Release No. 4 (scheduled for March 2001) and beyond, providing more enhancements and features including an "all-IP" based network, specification of a UTRA repeater, further refinements of radio access

modes, seamless service provisioning, enhancements to security, emergency calls, languages and alphabets, optimisation of power, spectrum and quality of service, and numerous other aspects. The task also entails an updating of the Release 99 specifications as needed (the technology is still evolving), for which a mechanism for handling quarterly updates has been established.

9.1.4 What is the Relationship Between 3GPP and ITU?

The 3GPP has been recognised by the ITU as one of the sources of technical specifications for the IMT-2000 family. There is thus a clear understanding between the two parties, which includes that 3GPP results will be submitted to the ITU where appropriate. However, because of the Project's status it does not contribute directly to the ITU. Formal contributions to ITU Study Groups, based on 3GPP Technical Specifications and Technical Reports, are made by individual members or OPs who are also members of the ITU.

The ITU entrusts the work of developing the standards needed for 3G systems to groups such as 3GPP, 3GPP2, UWCC and ETSI. For its part, the ITU is focusing on the interfaces between IMT-2000 family members to ensure seamless operation for users. A large number of 3GPP specifications, notably those for UTRA, have been accepted by the ITU as an essential component of its IMT.RSPC Recommendation, and 3GPP will continue to contribute to this process as the ITU updates and enhances the Recommendation.

In order to improve the exchange of information with the two sectors of the ITU, ITU-R and ITU-T, 3GPP agreed during its recent PCG/OP meetings in San Francisco to provide a special observer status for the ITU within the PCG of 3GPP.

9.1.5 What is the Relationship Between 3GPP and Other Initiatives?

The technologies that form the terrestrial component of IMT-2000 are being developed in several different communities: 3GPP is producing the specifications for the UTRA FDD (W-CDMA) mode and the UTRA TDD modes (high and low chip rates, the low chip rate mode

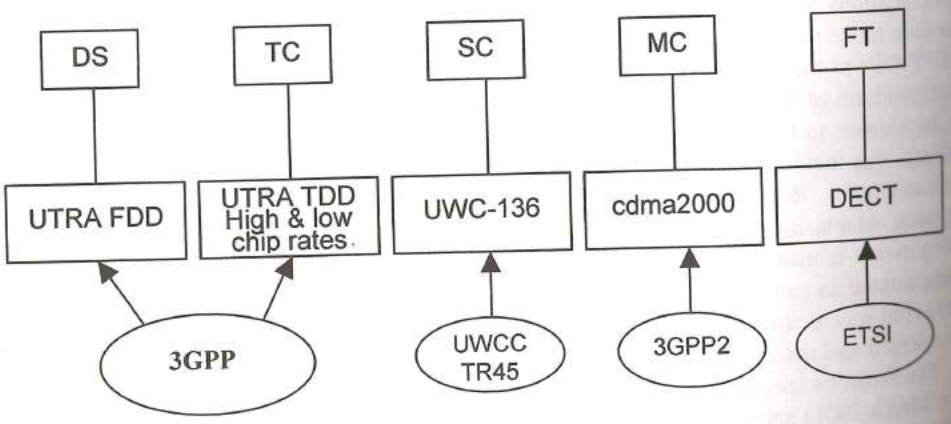

Figure 9.1.1 The five IMT-2000 terrestrial interfaces agreed by ITU-R

being TD-SCDMA, proposed by CWTS. A similar group, 3GPP2, is preparing the cdma2000 specifications, UWC-136 TDMA specifications are being developed principally by UWCC, and DECT specifications are defined by a set of ETSI standards (Figure 9.1.1).

Since the UWCC and ETSI are both partners in 3GPP (as an MRP and OP respectively), there is direct liaison between the Project and these two sources of specifications for other IMT-2000 family members.

When 3GPP and 3GPP2 were created it was felt that the interests of each group were sufficiently different to require them to remain separate but here again many of the OPs and MRPs are common to both groups, so there are natural channels for information exchange. Particular instances of formal co-operation between the groups were the two joint 3GPP-3GPP2 workshops held in 1999 to address the "Hooks and Extensions" issue aimed at ensuring interworking between the respective technologies.

In addition to all this, the 3GPP TSGs and their working groups are encouraged to liase directly with relevant technical bodies within the Project as well as among the Partners.

9.1.6 Conclusions

The attentive reader, and let's assume that you are one, may still be astonished to learn what big efforts have been necessary in order to establish 3GPP.

In the meantime, i.e. in the course of year 2000 nearly the whole work of the former ETSI TC SMG has been incorporated into 3GPP, to a large extent within the new TSG GERAN.

Well, our Japanese friends were not happy about this shift because they feared that it could result in delays in the 3G introduction in their country. They accepted this because a separate TSG for the GSM work was created.

Trying to recall the heated discussions within ETSI about the scope of 3GPP from 1998, one has to admit that such a move would have been violently rejected by a lot of ETSI members, maybe even by the majority. Using a philosophic approach, one can, of course, state that time helps healing (even wounds).

Today, i.e. February 2001, we can conclude from ETSI's point of view that all standardisation work related to further evolution of the second generation mobile system, i.e. GSM, and to UMTS is being done well within 3GPP. Thus, the objective to avoid parallel work within ETSI TBs and 3GPP has been fully achieved.

The ability of organisations and individuals around the world to co-operate and make available a full set of stable, agreed 3GPP specifications in 1 year is a remarkable achievement, one that is unprecedented in the world of standardisation. 3GPP meetings have taken place in many parts of the world, emphasising the strong commitment of the SDOs from China, Europe, Japan, Korea and the US. The MRPs have also lent very strong support to the work. Thanks to this widespread and determined commitment it has been possible to meet the very aggressive targets for 3G.

But Release 99 was only the first step – the workload has continued to intensify this year, as the initial specifications are refined and many new ones added, opening the path to full, seamless, global 3G services, changing forever the way that people communicate.

In the meantime, 3GPP has changed the designation of the releases and dropped to mention the year in order to avoid irritations and wrong expectations. Release 99 was first established in December 1999 and got its maturity in the course of year 2000. In 2000, more than 5700 change requests were implemented. The next big event will be Release #4 as a result of the

Ex. 1101
APPLE INC. / Page 22 of 44

series of TSG meetings scheduled for March 2001 in Palm Springs, US. This will obviously result in a further stabilisation and extension of the UMTS specifications.

3GPP is running very well. The individual members from the six OPs seem to be very satisfied with this arrangement – and the production line is in full swing.

Without exaggeration, one can give 3GPP the attribute of a success story. One may quote again here Mr Ed Roney who even addressed the 3GPP concept – prior to its realisation – as a "paradigm shift".

As the results of the GSM and UMTS related standardisation work represent a great part of ETSI's deliverables, it might be justified to note here that during the year 2000, ETSI published more than seven new deliverables each working day (Monday through Friday), i.e. one deliverable per hour!

Further information may be found on the 3GPP website at http://www.3gpp.org.

Ex. 1101
APPLE INC. / Page 23 of 44

Chapter 9: The Third Generation Partnership Project (3GPP)

Section 2: UMTS in 3GPP (December 1998–May 2001)

Niels Peter Skov Andersen[1]

9.2.1 A Change of Environment

In the period 1982 until end of 1998 the work on the GSM standard, and in the later part of the period on UMTS, had been performed in the same environment, starting under CEPT and later transferred into ETSI. The Technical Committee GSM, during this period renamed to SMG, and its working groups (Sub Technical Committees) had continuously existed and evolved. The same was the case for the working methods and procedures used within the work. Over time with the success of the GSM system more and more interested parties became involved in the work including parties from outside the original CEPT area. However, this was all a relatively slow evolution and no major revolutions in the organisation or the working methods occurred in this period.

After all these years of continuity in the work the discussions around the creation of 3GPP and the decision to establish 3GPP for the initial phase of UMTS[2] naturally created some uncertainty amongst the members of SMG. Especially the resulting split of the GSM standardisation, with the responsibility for the GSM core network transferred to 3GPP, but the responsibility for the GSM radio access Network maintenance remained in ETSI in SMG. This caused some concern amongst many delegates. Also the internal structure for the technical work within 3GPP was different from the well-known structure in SMG. SMG was based on a technical plenary with a number of working groups (SMG1, SMG2, ..., SMG12) performing the detailed technical work. The SMG plenary was the approving authority for the results of the work performed by the working groups. Also the plenary was the group responsible for approval of all new work items and the content of the releases. The structure for the work in 3GPP, as agreed by the partners, was quite different. The project

[1] The views expressed in this section are those of the author and do not necessarily reflect the views of his affiliation entity.

[2] The term UMTS is throughout this section used to keep consistency of terminology with the other chapters and sections. The term UMTS do not appear in the in 3GPP agreement, which defines the system as a third generation mobile system based on an evolved GSM core network and UTRAN (including UTRAN (FDD and TDD modes)).

was organised with four equal Technical Specification Groups (TSGs), who had complete autonomy for their area of responsibility, i.e. they were responsible for approval of new work items and final approval of deliverables. The four technical groups originally defined were:

TSG CN	Responsible for the core network development
TSG-RAN	Responsible for the radio access network based on UTRAN (FDD and TDD modes)
TSG-SA	Responsible for services and system aspects
TST-T	Responsible for Terminal and UIM

In addition to the technical groups the 3GPP organisation has a Project Coordination Group (PCG). However, the role of this PCG cannot be compared to the role the SMG plenary played. The SMG plenary was an open technical group with the approving authority in all technical questions including approval of new work items. The 3GPP PCG is a closed group with a defined membership consisting of a limited number representative of each of the partners (SDOs, MRPs) and the leadership (chairman and two vice-chairmen) of each TSG. Thus as a closed group the role of the PCG becomes more like a board overlooking the overall well being of the project.

This structure made many long-term SMG delegates concerned about how the overall coordination of the project could be ensured. This new structure was not introduced to overcome known deficits of the SMG organisation, but in my opinion, by political considerations to ensure than no single individual, individual member, organisational partner could obtain a controlling position in the project.

9.2.2 The First Two TSG Meetings

The inauguration meeting of the 3GPP TSGs was held in December 1998 in Sophia Antipolis, France. In the process of creation of 3GPP this was the first time that the 3GPPs real work force – the technical experts – met. The main objectives for this first meeting was to get the work started. One of the elements of the meeting was a presentation from the different partners on the status of their work on the third generation mobile system, the work, which they now were in the process of handing over to 3GPP.

Listening to the presentations and the discussions during the breaks it was very obvious that the background for standardization amongst the delegates was quite different. As an example, I remember that during the coffee break just after I, as chairman of ETSI SMG2, had presented the status of the UMTS radio work in ETSI, and had ended my presentation by stating that the UMTS radio work would only be on the agenda of one more meeting of ETSI SMG2. This was in order to complete the documentation to be handed over to 3GPP and then the work on UMTS radio in ETSI would cease, a small group of non-ETSI delegates came to me and asked "if all work on UMTS radio in ETSI ceases, how do the Europeans then coordinate their views on 3GPP?" Coming from the ETSI SMG background this was a completely unexpected question, as the working procedures for 3GPP were very similar to those of ETSI, it was clear to me that the contributions to 3GPP in general should come from the individual members – the companies, regulators etc. – in their own name and not as regional contributions. I explained this, but I also understood that for delegates with a background in international standardization from, e.g. ITU this was the normal way of thinking. During this

first meeting a lot of small explanations similar to this were given over a cup of coffee and already by the second meeting there was a far better common understanding on how the work in the groups was intended to be performed.

Even though the partners, already before the first meeting of the TSGs, had made the principle decision of having four TSGs and had elaborated draft terms of references for the groups, the definition of the area of responsibility for the TSGs and refinement of the terms of references was a key item on the agenda. Each of the TSGs adjusted their terms of references and with some subsequent adjustments at the second meeting, the terms of reference for the TSGs have until now (March 2001) stayed the same except for few minor adjustments.

In order to get the detailed work started and not loose the momentum, which had existed in the SDOs before the creation of 3GPP, it was a very important task at the first meeting of the TSGs to get the detailed work within the TSGs organised so technical work could commence and progress in the period up to the second meetings of the TSGs in March 1999 in Fort Lauderdale. This part of the programme for the first meetings of the TSGs went well, and by the end of the meeting each of the TSGs had established between three and five working groups, outlined their area of responsibility and appointed convenors for the groups. With the establishment of the working groups the detailed technical work was ready to start, and already by the second meeting of the TSGs significant progress was reported.

By the second meeting of the TSGs, which took place in Fort Lauderdale, the complete atmosphere had changed from the general uncertainty and procedural questions to a far more technical focus, even though a few items of a management and organisational nature still needed to be sorted out. In addition, at this second meeting the leadership (chairman and vice-chairmen) for the individual TSGs was elected for the next 2-year period.

As indicated, one of the main differences with the 3GPP organisation compared to the organisation of SMG was the lack of a superior technical group with an open plenary with responsibility for the technical coordination, final decision making, conflict resolution and the project management including adaptation of work items, etc. Already the original description for the role of TSG SA, which was elaborated by partners together with the 3GPP agreement in Copenhagen in early December 1998, contained a paragraph on giving TSG SA the role of – "High level co-ordination of the work performed in other TSGs and monitoring of progress". This role was subsequently reflected in the terms of references for TSG SA agreed at the first meeting of TSG SA (TSG SA#01). At the second meeting of TSG SA the TSG SA convenor Mr Fred Harrison, BT, provide a proposal[3] for how the TSG SA could fulfil its project coordination role. The key principles of the proposal were:

- To establish a project management function to create and maintain a cross TSG project programme including status of technical specification and reports.
- To establish close co-operation with TSG CN; TSG RAN and TSG T. Requiring the chairman or vice-chairman of each TSG to attend the TSG-SA meetings and bring new work items, issues and progress information to the attention of TSG-SA.

At the meeting another proposal[4] was received from a group of companies[5] who suggested that a TSG plenary be created, i.e. a fifth TSG with plenary function similar to that of ETSI

[3] SP-99050: proposals for managing the TSG project co-ordination role.
[4] SP-99068: TSG plenary.
[5] AT&T, BT, FRANCE TELECOM, NTT DOCOMO, TIM, TMOBIL.

SMG. The argument for this proposal was that a TSG plenary would help to ensure overall project coordination and elaboration of a consistent and complete set of UMTS specifications.

After long discussions a compromise not requiring changes to the TSG structure was found and agreed. This comprise[6] was based on the following principles for the TSG SA's project coordination role:

- At least while performing its project co-ordination role, the TSG SA will not meet at the same time as other TSGs.
- At least one representative of TSGs RAN, CN and T and their working groups will attend each TSG SA meeting, to report on the activities of their respective TSG. They shall be responsible for bringing new work items, issues and progress statements on work such as specifications and existing work items from their respective TSGs to the attention of TSG SA.
- The TSG SA plenary will also include reports from its own working groups and facilitate information exchange between those working groups and the other TSGs.
- The TSG SA shall have arbitration responsibility to resolve disputes between TSGs.

As can be seen from the principles, the independence and the rights of the other TSGs was not touched by the compromise. Each TSG maintained its right to approve work items and deliverables, etc. As a result of the way forward on the TSG SA management role, the TSG meetings in Fort Lauderdale were the last meetings where all four TSGs met in parallel. At the subsequent TSG meetings in Shin-Yokohama in Japan at the end of April TSG CN, TSG RAN and TSG T met in parallel followed by TSG SA and the chairmen of TSG CN; TSG RAN and TSG T provided to TSG SA a status report on the work and progress in their respective TSGs. The TSG SA meetings starting from the third meeting in Shin-Yokohama then had a three part structure. A part related to TSG SA internal matters where the different TSG SA working groups report the progress of their work and submit their contributions for approval, this part is similar to the work in the other TSGs. A second part related to the technical coordination with the other TSGs and a third part dealt with general project management issues such as working methods, document handling, etc.

By the end of the second TSG meetings most of the "beginners" difficulties had been resolved, the interaction between the TSGs defined and TSG SA was ready to take on-board is role in the coordination role. Also the second TSG meetings showed that the detailed work in the working groups had got a good start, the work handed over from the partners was well received and progressing well. All in all, the definition and establishment phase of the technical work in 3GPP had been completed successfully and the transfer of work from the partners to 3GPP had been performed without causing any major disruption in the ongoing technical work.

9.2.3 The First Release – Release 99

After the two first two meetings of the TSGs where especially TSG SA had used time to organise the work, the third meetings were into their routine and could fully concentrate on the technical specification work.

The work in 3GPP followed the same basic methodology as was used for the GSM work in ETSI. The specifications generally are based on a three stage approach, with a stage 1

[6] SP-99087: proposals for managing the TSG project co-ordination role.

description containing the functional requirements, stage 2 containing the overall functional description and architecture for a given functionality and stage 3 being the detailed technical specification down to the bit level. Working with this methodology the idea is of course that the stage 1 description is first completed or nearly completed so the requirements are clear. The next step is then to complete the stage 2 description and thereby define the overall architecture and functional split for the technical realisation of the functionality. When stage 2 is complete or close to completion the third step the stage 3 specifications containing the detailed technical specification is complete.

However, it was not possible for 3GPP to do this work serially, because of the very short timescale for completion of the first set of specifications in December 1999 only 1 year from 3GPP's creation in December 1998. Thus the work on stage 1, 2 and 3 specifications had to a large degree to be performed in parallel. Doing so TSG SA WG2, which is responsible for system architecture, quickly became a bottleneck in the process, as it was difficult, especially for TSG CN (core network) to draft the detailed specification before the architectural decisions were made. This problem peaked at the fourth TSG SA meeting in June 1999, when going through the status report from TSG SA WG2, where it became clear to the full membership that an extraordinary effort was needed to ensure that the architectural work was speeded up.

Standardisation by committee is not a traditional project, where the project leader can reallocate resources to the most urgent task. In standardisation the important task is to ensure that all the participants know and understand where additional effort is most urgently needed, so the volunteer work effort is pointed in the right direction. The recognition of the need for an extraordinary effort in TSG SA WG2 helped to speed up the architectural work and minimise the problem of TSG SA WG2 being a bottleneck. The initial delay of course made the work schedule even tougher for the groups responsible for the detailed stage 3 specifications.

As you can imagine it is not possible here to go into the details of the work, which led to the first set of specification from 3GPP in December 1999. In the following I will therefore only provide a few of examples of items, which required resolution by TSG SA.

For UMTS a new ciphering and authentication mechanism providing a higher degree of security has been developed. The SIM card (for UMTS USIM) is involved in the authentication process and calculates the necessary keys for the authentication and ciphering. Thus new SIM cards are required, or to be technically correct, cards with the USIM application are required. In the following I will use the short term USIM to indicate the card supporting the new security algorithms and SIM for the old cards supporting the GSM level of security. At the third meeting of the TSGs there was the question of whether the UMTS networks should only support USIM and thus always provide the highest possible degree of security or whether it should be possible to access a UMTS network with terminals with a SIM only. On one hand a number of delegates believed that it was preferable only to allow the usage of USIMs in the UMTS terminals, this on the other hand was questioned by operators that could foresee a slower roll-out of UMTS, e.g. due to the expected licensing time. For them a requirement for usage of USIM only in the UMTS terminals would leave them with two alternatives; either to issue USIMs even though they did not yet have a UMTS network, or be in a situation where their customers could not roam to, e.g. Japan and Korea with no GSM networks but only UMTS networks. This lead to a long discussion where it could have been tempting to perform a quick vote; however, to keep the good spirit of cooperation and

Ex. 1101
APPLE INC. / Page 28 of 44

consensus based work I as 3GPP TSG SA chairman considered voting as an emergency solution if everything else failed. As almost always the attempt to find a solution for which consensus could be obtained succeeded. The comprise was found based on the following elements:[7]

- Support access to UMTS access networks while using cards equipped with either the SIM, the USIM functionality or both; and
- Allow a serving UMTS operator the option to block access to the UMTS access network when a card equipped only with a SIM functionality is used.

As usual when compromises of this type were obtained it was the assumption of the meeting that the companies/members who required the capability should do the work to specify the signalling and other mechanisms required.

At the fourth TSG meetings the very rare situation of one of the other TSGs raising an issue to TSG SA for resolution occurred. TSG CN had completed the feasibility study of the Gateway Location Register (GLR). TSG CN had then decided not to start specification work for the GLR. However, as some members of TSG CN had expressed strong interest in the GLR, it had been proposed to let the interested parties elaborate the specifications required for the GLR outside TSG CN and submit the result to TSG CN. This decision had caused some problems and the TSG CN raised the question to TSG SA of how to proceed, e.g. should a vote be taken. I as chairman of TSG SA indicated to the meeting that votes were to be seen as an emergency solution when everything else has failed. First, an attempt should be made to find a solution for which consensus can be obtained. For this explicit case it seemed clear that the resistance to start work on the GLR was coming from operators not seeing the need for a GLR and fearing that the introduction would impact existing networks and other networks without a GLR. On the other hand especially operators with no GSM legacy network showed a strong interest in the GLRs as a way to reduce the amount of international signalling caused by roamers moving around in very densely populated areas. Taking into account the strong interest and the concerns expressed, it was found, that there would be no problem, if a GLR could be done in such a way, that it had no impact on an existing HLR[8] (pre-3G), if a subscriber belonging to a HLR roamed onto a network utilising a GLR. Similarly the support of the GLR in one network should not impact networks not utilising the GLR. Based on this analysis, TSG SA recommended that TSG CN adopt a work item on GLR requiring a GLR to be fully compatible with old and new non-GLR networks. As hopefully can be seen from this example it is and has been a key priority in 3GPP to as far as possible base decisions on consensus as it also was the case for the GSM development in ETSI.

Another type of problem, which every now and then needs resolution at TSG level is the specific national or regional requirement often caused by the local regulation. Requirements that often can cause problems in relation to roaming. One example of this is the emergency call where TSG SA at meeting number 5 received a proposal[9] for national variation on terminals to cater for the differences in emergency call requirements. When GSM was introduced one unique number for initiating emergency calls had been defined (112); this ensured that a roaming user would always be able to perform a emergency call without

[7] SP-99208.
[8] HLR = home location register.
[9] SP-99481.

knowing a any specific local situation. When GSM entered into new parts of the world this function had been improved by letting the local operator store a number on the SIM card which should be considered as the emergency call number, and thus, e.g. and American user could use 911 wherever he brought his mobile. However, there are other differences in the handling of emergency calls other than just the number to dial. The GSM solution only allows routing of emergency calls to one central emergency centre and does not differentiate the type of service needed such as ambulance, fire brigade or police. However, some operators had a regulatory requirement to route directly emergency calls to the relevant service and thus needed different numbers per service. Therefore, they had suggested having a national variation of terminals. After some discussion in TSG SA the proposal was rejected. The main reasons for this was that it was seen as essential to avoid local variations of terminals and secondly a solution based on local variation of terminals would not solve the problem of subscribers roaming from other parts of the world with terminals without the specific local variation. Anyhow, the rejection of the proposal did not mean that the problem was ignored; on the contrary the relevant working groups were tasked to find a generic solution, which would satisfy the local regulations without causing problems with roaming or requiring variation in terminals.

That the previous examples from the elaboration of 3GPP Release 99 all come from the TSG SA does not mean that this type of problem does not appear in the other TSGs. As also can be imagined, the specification of a complete new radio access network in TSG RAN in the timeframe of 1 year was one of the most demanding tasks during the elaboration of the first set of specifications from 3GPP (Release 99).

As mentioned earlier, when 3GPP started in December 1998 a target date of December 1999 was set for the first set of specifications. So the sixth meetings of the TSGs in Nice, France in December 1999 were the meetings where the status for the first year of 3GPP was to be made. In order to get a full overview of the status of the work and the degree of completion, the process for documenting the remaining open issues had been agreed amongst the chairs and vice-chairs of all of the TSGs.

The principle for this was relatively simple and building on the assumption and desire that a set of specifications should be completed and frozen at the sixth meetings of the TSGs. The term frozen meant that there should be no functional changes or additions made to the set of specifications, but only strictly necessary corrections of errors or omissions which if uncorrected risk making the system malfunction. The idea behind the principle was that at the next meetings of the TSGs all proposed changes to the specifications, which could not be justified as an essential correction should be rejected, unless an exception for that specific item had been given in December 1999. In order to document these exceptions all working groups and TSGs had prepared and forwarded to TSG SA sheets describing the non-completed functionality for which they wished to have granted an exception from the general rule of no functional changes. In addition to the description of the functionality, the sheet also indicated the consequences if this functionality was completely removed from Release 99.

TSG SA collected the status reports from the different groups and created a relatively large table[10] where on one side was the different functionalities and on the other side the different groups and in the table an indication if a group had requested an exception for completion of the functionality. After having created this table based on the status reports, TSG SA went through the table on a per functionality basis and evaluated the expected completion date and

[10] SP-99639.

the necessity of the function in Release 99. In order to maximise the stability of the set of specifications, especially in the case where several groups had items open for the same functionality, specifications were scrutinised in detail and in several cases the functionality was completely removed from 3GPP Release 99. This review led to the removal of functionalities such as Enhanced Cell Broadcast, Tandem Free Operation for AMR, Support of Localised Service Area and a reduction in the location service functionality in Release 99.

At the end of the December 1999 TSG SA meeting approximately 80 exceptions from the rule of no functional changes were granted. At the following meeting of the TSGs in Madrid in March 2000 the status and the list of open items was once again reviewed and the number of open items was reduced from 80 to approximately 30. At the TSG meetings in June 2000 the remaining open items were completed and since then only necessary corrections could be made. However, it is to be understood, that when such a substantial set of specifications for the 3GPP Release 99 have been elaborated in the time frame of approximately 1 year, it is unavoidable that there are some ambiguities and errors in the specifications. It is a very important task to have these errors corrected in the specification as soon as they are discovered, as this is the only way to avoid small differences in implementation due to different solutions to errors. Differences which if not avoided could lead to problems of interoperability, etc. Also it should be noted that there will continuously be errors discovered in the specifications which need to be corrected, at least until every detail has been implemented and made operational in the field.

9.2.4 Introduction of Project Management

As indicated, one of the main differences with the 3GPP organisation compared to the organisation of SMG was the lack of a superior technical group with an open plenary with responsibility for the technical coordination, final decision making, conflict resolution and the project management including adaptation of work items, etc. Instead the different TSGs approved work items and technical work on their own. Even though they reported the status of their work to TSG SA there was no simple way to for linking a given functionality with the work being performed in the different TSGs. This was clearly a problem during the elaboration of Release 99, as it was difficult for the delegates to get an overview of which functionalities were on the critical path for completion. To get an overview actually required that key experts from the different areas sit together and fit the different parts of the puzzle. It therefore, required quite some effort in and outside the TSG meetings of December 1999 to provide an overview, which allowed the meetings to make conscious decisions.

As this potential problem was clear to me from the start of the project, I had, already at the second meeting of the TSGs in March 1999, had discussions with the chairmen of TSG SA WG1 and TSG SA WG2 on introducing a model for the project co-ordination which would follow the work from the initial requirements to completion. This model was then introduced for initial discussion to the leadership (chairmen and vice-chairmen) of the other TSGs at the third meeting of the TSGs. During the rest of 1999 additional background work was done in order to prepare for the introduction of the model for project co-ordination. At the December 1999 TSG SA the model was presented to TSG SA for approval and became the model for the organization of the work for the following releases and the basis for the overall project plan.

The model was based on the introduction of the Feature, Building Block and Work Task concept, and categorization and linkage of the work items. The model was thought of as a

reference model for structuring the work. It was not the intention to rigorously enforce the usage of the model on all ongoing work, but merely to use the model as a common reference model across the TSGs and to structure future work. The model took its origin from the typical flow for creation of a new feature or service and can briefly be described as follows.

TSG SA is through TSG SA WG1 responsible for defining the features and services required in the 3GPP specifications. TSG SA WG1 is responsible for producing the stage 1 descriptions (requirement) for the relevant features and passing them on to TSG SA WG2. TSG SA WG1 can also forward their considerations on possible architecture and implementation to TSG SA WG2, but is not responsible for this part of the work.

TSG SA WG2 should then define the architecture for the features and the system, and then divide the features into building blocks based on the architectural decisions made in TSG SA WG2. TSG SA WG2 will then forward the building blocks to the relevant TSGs for the detailed work. These proposals will be reviewed and discussed in an interactive way together with TSGs/WGs, until a common understanding of the required work is reached. During the detailed work of the TSGs and their working groups, TSG SA WG2 is kept informed about the progress.

The TSGs and their WGs treat the building block as one or several dedicated Work Tasks (WTs). The typical output of a given WT would be new specification(s), updated specification(s), technical report(s) or the conclusion that the necessary support is already provided in the existing specifications.

A part of TSG SA WG2's role is in co-operation with the TSGs and their WGs to identify if synergy can be obtained by using some of the building blocks or extended building blocks for more than one feature. Part of TSG SA WG2's task is to verify, that all required work for a full system specification of the features relevant take place within 3GPP without overlap between groups. In order for TSG SA WG2 to be successful, this has to be done in co-operation with other TSGs/WGs.

About the project scheduling: TSG SA WG1 sets a target, TSG SA WG2 performs a first technical review and comments on the target. TSG SA WG2 indicates some target for time schedule together with allocation of the defined building blocks. The TSGs and their WGs comment back on these targets. TSG SA WG2 tries if necessary to align the new target between the involved parties. TSG SA WG1 and TSG SA are kept informed of the overall schedule.

It was also in the model, it was identified as a task for TSG SA, TSG SA WG1 and TSG SA WG2 to ensure early involvement of TSG SA WG3 (working group responsible for security) to ensure that the potential security requirements, service requirements and the architectural requirements are aligned and communicated to the TSGs and their WGs.

In order for TSG T and its subgroups to plan and perform its horizontal tasks on conformance testing and mobile station capabilities, it was foreseen to invite TSG T to evaluate the potential impact of a new feature. Also work on the horizontal tasks is required to be included in the overall work plan.

With the acceptance of the modeling of the work based on the work breakdown into features, building blocks and work tasks, the next step was to map the work onto the model, create the corresponding work items for the features and building blocks and establish a first version of an overall project plan for 3GPP. In order to kick-start this process a number of Inter Group Coordination groups were establish within TSG SA WG2. The purpose of these groups was to try to establish a first version of a project plan for a given area. To ensure

Ex. 1101
APPLE INC. / Page 32 of 44

the correctness of the information rapporteurs and representatives from the different working groups were invited to either participate or provide status and planning information, which then was used to establish a "traditional" project plan. Also the groups identified and informed the relevant groups if, e.g. building blocks or WTs were missing.

After the establishment of stable versions of the project plan covering ongoing activities for all of the TSGs and their working groups. The responsibility for maintenance of the project plan, was shifted so each TSG was made responsible for keeping updated the parts of the work plan, which correspond to their work. The practical maintenance of the project plan was then transferred to the MCC, the team of technical experts functioning as technical secretaries for the groups and responsible for implementation of the decisions of the meetings. The MCC corresponds to the Permanent Nucleus later known as PT12 during the elaboration of GSM.

Today the project plan is just another well functioning and convenient tool, which allows delegates and their organizations a quick overview of the status of the ongoing activities. However, this is only possible because the different groups and the MCC make a significant effort in keeping the plan up to date.

In the August 2000 TSG SA held an ad-hoc release planning, which recommended entirely controlling the 3GPP work program via the work plan, and doing this independent of releases. This recommendation, which later was confirmed by TSG SA further proposed that approved work items introduced into the plan are given calendar target dates and not particular release target dates. These "calendar" work item target dates will need to monitored and adjusted as work and knowledge about the work items progress. For this purpose reasonable milestones shall be defined. The work plan calendar should then also indicate planned future release dates with reasonable frequency to allow for stability, e.g. approximately every 12 months, depending on whether there would be enough completed work to justify the issue of a release.

The content of each release could then be easily deduced from the work plan, i.e. those items scheduled for completion by the closing day for the release being included in that particular release, a 3GPP road map. The definition of the content of a release could then be based upon the work plan, with a review of the release content starting approximately 6–9 months before the initial predicted closing date of the release. Work items not completed at the chosen closing time of the release are not included in that particular release. Maintaining the closing date of a release is a priority. Only when it is identified that no substantial new features would be available at the target date, is shifting the date considered to be an option.

In addition, independently of the actual release date, upon completion of a particular work item, the work item is frozen, denying any further functional change on the completed work item, permitting only essential technical corrections. This helps stabilize the specifications and the availability of the draft new release versions of the specifications can assist companies wanting to start developing the new features.

In all, the definition and establishment of an overall project plan was successful and has provided a high degree of visibility of 3GPP's activities. Especially, when the second set of specifications from 3GPP (Release 4) was completed in March 2001. The advantage of having the project plan to identify the completed features showed a major advantage and helped simplify the work compared to when Release 99 was completed. Also the process has changed from a release centric approach to a project plan approach with individual planning for each function or feature. To mark this change the naming of the releases was decoupled from the calendar and changed to refer to the version number on the specification and thus

what would in the old philosophy have been called Release 2000 is called Release 4, which then is to be followed by Release 5, etc.

9.2.5 Technical Work in 3GPP Following the First Release

About the first release of specification from 3GPP, one can in short describe the system specified as a core network evolution where the circuit switched domain provides circuit oriented services based on nodal MSCs (an evolution of GSM). Similarly the packet switched domain provides IP-connectivity between the mobiles and IP-networks based on an evolved GSM GPRS core network. In contrast to this the radio access network is a complete revolution with a brand new radio access technology. From this background it was not a major surprise that the most significant changes to come in the next releases are focused on the core network side.

Already when the work after Release 99 was discussed for the first time at the fourth meeting of the TSGs in Miami, this trend was clear. It was at this meeting that 3GPP accepted the idea of specifying an all IP based architecture option, i.e. an architectural option not requiring the traditional nodal MSC. The work on an all IP based architectural option started with a short feasibility study to identify the implications and to plan the time-scales. However, this work progressed so fast and in parallel with the time critical task of completing Release 99 that several organization, especially those amongst the smaller operators had problems following the work. Also the architectural analysis progressed much faster than the work on requirements. Therefore, in order to bring everybody level again, it was, at the TSG meetings in December 1999, decided to hold a workshop on the subject of the "All IP" option. This workshop took place in Nice, France in February 2000.

The "All IP" workshop in February 2000 was organized as a two part event, the first part where members were invited to present their vision for the "All IP" work, being about operational scenarios, technical visions, etc. The second part of the workshop was used to draw up the general trends from the presentations and thereby identify the goals by going "All IP", the requirements for the solutions and the way forward.

From the discussions it was clear that the key motivator for moving toward the "All IP" option was to establish a flexible service creation environment, allowing for quick service/application creation with well defined APIs allowing for third party applications and thus allowing gain from Internet as well as intranet services. Further, the development should provide for real time applications including multimedia services, this to allow the operators to market new and interesting services allowing the creation of additional revenue streams. Further, the introduction of IP based architecture was seen as providing the option for independence of access type and thus allowing seamless services across different access networks. Also the independence of access type could allow savings through the common development of services for several access types. Clearly one of the key motivators for the operators' interest in an IP based architecture was the expectation of cost reduction due to the possibility of leveraging the IP technology cost factor and the expected gains from the better scalability compared to nodal switched based networks.

From the discussions at the workshop it was also clear that a hybrid circuit switched and packet switched network would exist for a long time. It was also clear that the changes towards the IP based architecture should not be done at any price. Especially, the need for an open multi-vendor environment with at least the same quality and security levels as the

"state of the art" mobile networks at the time of introduction. Another requirement identified due to the co-existence of the circuit switched and packet switched domains was the requirement for service transparency across domains. Finally, an important and far from trivial requirement to fulfill, was the need to respect spectrum efficiency. It was noted at the workshop, that the IP header was actually larger than a standard 20 ms speech frame in the cellular system, which on its own clearly made the spectrum efficiency requirement a challenge. During 2000 the need for being economical with spectrum was clearly illustrated by the prices paid at the 3G spectrum auctions, with payments of approximately US$35 billion in the UK and approximately US$50 billion in Germany for the licenses to install and operate 3G networks.

At the workshop in February 2000, there were different opinions about what would be a reasonable and realistic timescale for the specification of the IP based architecture option. Some of the large operators indicated that they felt that a target date of December 2000 was too aggressive and not realistic, whilst other large operators indicated that they believed it could be completed by December 2000 and wanted to keep a target date of December 2000. Even though it was never said, one of the reasons for the aggressive timescale was clearly to ensure that the focus especially from the manufacturers was kept on this development, and not risk unnecessary delays, due to a time schedule, which people might regard as relaxed.

Even though the initial time schedule kept a target date of December 2000, in the further work the size of the task quickly became clear and some more realism appeared in the definition of targets in terms of content and completion dates. With respect to this it should not be forgotten that in difference to when working on the creation of the first release (Release 99), 3GPP now had a major task to perform in parallel to all new developments, that was the maintenance and error correction of Release 99. As mentioned earlier the first years of maintenance of a brand new standard are very time consuming, and thus it was very ambitious to plan for a next release already 1 year after the first. Even though the GSM work in ETSI used an annual release schedule, one should not forget that it took more than 3 years from the stable specification for GSM phase 1 before it was followed by the second set of specification for GSM phase 2.

Anyhow the second release (Release 4) was planned for and completed in March 2001, this without the result of the ongoing IP based work, which is the target for the next release (Release 5) expected approximately 1 year later than Release 4. Thus Release 4 does not contain significant revolutionary news, but instead it contains a number of smaller features and functionalities, which can be seen as an important complement to Release 99.

The work on the IP based architecture for Release 5 is focusing on the introduction of an IP multimedia subsystem, the part of the IP based network providing the capabilities for multimedia services. This choice has been made in order to ensure that the first results of the "All IP" work do not only provide for alternative methods of providing already existing and well known services, but also allow the operators to create new innovative services and new revenue streams which can justify the investment in the IP based architecture. The service drivers for Release 5 have evolved to be compatible with Release 99 and Release 4, with the addition of IP based multimedia services, including efficient support for voice over IP over the radio for the multimedia services. In Release 5 it is foreseen that the circuit switched domain is retained and provides 100% backward compatibility for the circuit switched services. Similarly the existing packet service domain is kept and the IP multi-subsystem

is added and provides new IP multimedia services that complement the already existing services.

In the longer term, the IP multimedia subsystem might evolve to the extent to where it can provide all services previously provided by the CS-domain, and thus the specification will need to support all the commercial interesting services from today's circuit switched domain in the packet switched domain in the IP based architecture.

9.2.6 The Transfer of the Remaining GSM Activities into 3GPP

As described earlier, the original terms of reference for 3GPP covered a third generation mobile system based on an evolved GSM core network and UTRAN (including UTRAN (FDD and TDD modes)) and not covering the GSM/EDGE Radio Access Network (GERAN) part. This work together with a few other GSM only items remained in ETSI under the responsibility of SMG. This resulting split of the GSM standardization caused concern when 3GPP was created. However, time showed that it was possible to co-ordinate the work between 3GPP and SMG. For most areas, except for the GERAN specific work, co-locating the meetings of the SMG working groups with their corresponding 3GPP groups enabled the co-ordination. However, it was also clear that there was no longer one single forum with an overall responsibility for GSM as a system. This overall co-ordination was to some degree made during the TSG meetings, in the corridors and in the meetings by delegates, who ensured that the service, architectural and core network decisions would be compatible with the GERAN. However, this way of working reduced transparency of the background for arguments and decisions, both for those interested in the further development of GSM as a system and for those not interested in the GSM legacy.

In September 1999, Committee T1 sent a liaison to its 3GPP Organizational Partners requesting that the terms of reference of 3GPP be expanded to include evolved GSM radio access; that all evolutionary work of GSM should be transferred to 3GPP. The reasoning provided was that for the foreseeable future, the GSM/EDGE radio access would co-exist with the 3G radio access and there would be a clear benefit for all parties in ensuring co-ordination between the further GSM/EDGE development and the work related to the UTRAN access. Also the liaison statement indicated that by including the remaining GSM/EDGE radio work in 3GPP the overall number of meetings, liaison statements, etc. could be reduced and thus the efficiency increased.

At the 3GPP PCG meeting in January 2000, the responses from the other partners was tabled and discussed. ETSI indicated that they could support the proposal from T1 and suggested that the transfer should be effective from June 2000. ARIB indicated that 3GPP activities were based on common interest, meaning that each participating SDO and individual member needs to commit to the 3GPP objective and scope. ARIB continued that unfortunately, ARIB had no requirements to produce standards of GSM radio access including EGPRS in Japan. In conclusion ARIB could not support the request of ARIB individual members to take part in the study related to GSM radio access in 3GPP. Also the response from ARIB indicated concerns regarding potential impact on the timescales for the UMTS work as well as concern regarding financing of the project if not all parties had equal benefit of the work performed. TTA's response was very similar to that of ARIB additionally commenting that the existing process was functioning well.

At the PCG meeting CWTS indicated that they could support a transfer of the GSM radio

Ex. 1101
APPLE INC. / Page 36 of 44

work into 3GPP. After some short discussions it was agreed to form an "Ad-Hoc Group on Movement of Work into 3GPP" to assess the impacts and appropriate program structure to support the transfer of appropriate ETSI/SMG and T1 programs related to the GSM/EDGE radio access into a 3GPP. It was agreed that the work should be based on the following key assumptions:

- Any proposed new 3GPP work items should have no negative impact on current Release 99/Release 4 schedules, resources and funding.
- Only those parties within 3GPP interested in contributing to 3GPP developments in the area of GSM/EDGE radio access will be required to resource and fund this specific activity.

The ad-hoc group, which was lead by a member of the T1 delegation to 3GPP, meet three times in order to elaborate on a detailed report covering the concerns, potential advantages and disadvantages of the transfer, and the proposal for how the transfer could be performed, in terms of organization, funding, timing, etc. At the final meeting of the ad-hoc group in late March 2000 in Tokyo the report of the ad-hoc group was completed and contained the following proposals:

- A new TSG should be created – TSG GERAN – into which essentially all current SMG2 work would be moved.
- The work of SMG7 would be moved into the proposed TSG GERAN.
- The generic operations and maintenance work of SMG 6 would be transferred to 3GPP TSG SA WG5, while radio-specific GERAN work in SMG 6 would be transferred into the proposed TSG GERAN.
- The work of SMG9 that is specific to GSM and 3GPP systems would be transferred into 3GPP T3.
- The other ETSI SMG groups already have direct SMG-3GPP correlation, and the corresponding groups are already meeting in parallel or at least in close collaboration. Therefore this proposal recommends the formal transfer of this work.

This proposal from the ad-hoc group was accepted by all the partners in 3GPP at the PCG and OP meetings in July 2000 in Beijing. At these meetings also the corresponding modifications to the 3GPP working procedures, project description, and partnership agreement was approved. At this meeting, terms of references for TSG GERAN was approved and I was appointed convenor for TSG GERAN with the task of convening the first meetings of TSG GERAN.

TSG GERAN held its first meeting in Seattle at the end of August 2000 on the days originally planned for the meeting of ETSI SMG2, which held its last meeting in late May 2000. With the transfer of the remaining GSM work from ETSI to 3GPP, the first part of the GSM era in standardization had finished and the forming of 3GPP completed.

The transfer of the GSM/EDGE radio activities to 3GPP went without any major problems and without causing any delays to ongoing GSM/EDGE or UMTS activities. The work in TSG GERAN is now focusing on upgrading the GSM/EDGE radio access network to support the Iu interface as defined for UMTS, as well as supporting the IP multimedia subsystem. This is in order to allow full independence for the core network from the type of radio access network used, being either UTRAN or GERAN. This of course only as long as the required

service from the radio access network is within the physical limitations of the radio access network in question.

As a part of the decision of transferring the remaining GSM activities into 3GPP it was agreed to perform an organizational review in a 6 month time frame after the transfer. This review was performed during early 2001 and at the PCG meeting in April 2001 it was as a result of this review concluded, that there was no need for changes to the 3GPP organizations. It was further noted that the current organization of 3GPP had been able to evolve and handle the changes and challenges appearing.

In all, 3GPP is now a mature organization able to continue the good work and the co-operative spirit, which was always the trademark of the GSM/SMG group.

Annex 2: Organisation Evolution of the Technical Groups

Section 3: 3GPP

Adrian Scrase[1]

A2.3.1 December 1998 to Mid-1999

During the preparatory talks that led to the creation of 3GPP, many discussions took place to find the optimum organizational structure. The ETSI TC SMG model had worked well for many years and it was very tempting to adopt a similar structure and just widen the sphere of participation. However, some voices called for a more radical approach in order to streamline the structure and to reduce the time taken for specifications production. As a result of these discussions, the following key principles were established on which 3GPP was structured:

- Minimum number of hierarchical levels;
- Large degree of distributed autonomy;
- Clear separation of technical activities from political and administrative activities.

When 3GPP was created, four Technical Specification Groups (TSGs) were formed to undertake the preparation of technical specifications. The four TSGs were as follows:

- TSG CN – core network
- TSG RAN – radio access network
- TSG SA – services and system aspects
- TSG T – terminals

Each of the TSGs was authorized to develop and approve specifications and reports within its terms of reference. This represented a departure from the more traditional approach where a single entity (i.e. a plenary) within a project has the authority to approve a project's output. It was believed that by distributing the approval authority, the time taken to produce specifications would be reduced since this effectively removes one level of hierarchy from the approval procedure. However, it was apparent from the outset that distributing the approval of specifications would lead to a greater requirement for technical co-ordination and thus TSG SA was tasked to perform a co-ordination role across all TSGs. This co-ordination role

[1] The views expressed in this section are those of the author and do not necessarily reflect the views of his affiliation entity.

has been aided by the collocation of the TSG meetings and by concerted efforts from the industrial members within 3GPP.

On the creation of 3GPP, a large amount of the work previously undertaken by ETSI TC SMG was transferred to the four TSGs. It was important for all involved to track the transfer of work carefully and meticulous care was taken to map the work from its old home in SMG to its new home in the 3GPP TSGs. This mapping information was made openly available on the 3GPP and ETSI websites to ensure that the telecommunications community could, as a whole, follow the work. This transfer of work was a form of "soft handover", with groups existing in parallel within SMG and within 3GPP for a period of time and items of work being transferred at the most appropriate point. The complete transfer of work was achieved within a period of 6 months.

The scope of 3GPP had been a subject of much debate and at the time of creation the scope covered the 3G system incorporating the UTRA radio access technology. This implied that not all of the work that existed within ETSI TC SMG was to be transferred to 3GPP. There remained a lot of work to be done for the evolving GSM radio interface (i.e. GPRS and EDGE) and this work would remain within SMG for the time being. In addition, the generic work relating to IC cards did not belong in 3GPP either and this too remained within ETSI TC SMG. SMG also retained the responsibility for European issues relating to both 2G and 3G, particularly for regulatory matters, and was also responsible for the transposition of 3GPP specifications into ETSI deliverables.

3GPP had no responsibility for the long-term evolution of the 3G system nor any responsibility for the fixed access component of UMTS. An ETSI project was therefore created (EP UMTS) to take care of these aspects.

A2.3.2 Mid-1999 to Mid-2000

3GPP was an entirely new concept and the first few months of operation were, in effect, experimental. However, in a very short time the project proved to be successful, and the industrial members gained confidence in the new method of working. The preparation of the first release of specifications proceeded at an alarming speed with more than 300 specifications being completed within the first year of operation. At the same time, the development of GPRS and EDGE continued within the ETSI TC SMG environment with active participation from North America. It was not long before serious consideration was to be given to the transfer of all remaining work and the closure of ETSI TC SMG.

An ad-hoc group was created within 3GPP in January 2000 to give full consideration to the widening of the 3GPP scope, particularly to include GPRS and EDGE. It was clear that not all 3GPP partners had a commercial interest in GPRS and EDGE and assurances were required that the ongoing UTRA based activities would not be unduly delayed by such a change in the 3GPP scope. By July 2000 the necessary agreements had been obtained by each 3GPP partner and the scope of 3GPP was formally changed to include the development and maintenance of GSM specifications, including the GSM evolved radio access technologies (such as the General Packet Radio Service (GPRS) and Enhanced Data Rates for GSM Evolution (EDGE)). This was achieved by the creation of a new TSG called TSG GERAN – GSM/EDGE Radio Access Network.

The scope of 3GPP was also modified to make clear that the responsibility for the long-

term evolution of the 3G system was vested there. This enabled the ETSI group EP UMTS to be closed, thus focusing efforts firmly within 3GPP.

With the transfer of GSM into 3GPP it was a natural progression for ETSI TC SMG to be closed. However, ETSI still had the important task of transposing the 3GPP results into ETSI deliverables and the preparation of harmonised standards required to meet European regulations. This activity was not expected to be particularly onerous but it was nevertheless of high important for the European industry. To accommodate this work, the ETSI TC Mobile Standards Group (TC MSG) was created.

The only remaining activity to be accommodated was the generic activity pertaining to IC cards. ETSI had earned a high reputation for this work and since it was not specific to mobile telecommunications systems it was not appropriate for this to be placed within 3GPP. This led to the creation of an ETSI project later to be called Smart Card Platform (EP SCP).

A2.3.3 Mid-2000 Onwards

By mid-2000 the focus of attention was now clearly on 3GPP where all UTRA based and GSM radio based activities were now taking place within five TSGs. The European regulatory interests were being taken care of by ETSI TC MSG, and the generic IC card activities by EP SCP. (The former TC SMG and EP UMTS had been closed by this time).

Within Europe, interest had been shown by the railway community to adapt the GSM system and to use it as the basis for a European railway telecommunications system. This work had progressed well within the former ETSI TC SMG with much of the work having been completed before its closure. The systems were now close to deployment and it was desirable to have a permanent home for these activities. This led to the creation of a new ETSI Project called Railway Telecommunications (EP RT).

By late 2000, 3GPP had grown used to having five TSGs and had gained some experience of operating with its expanded scope. Part of the agreement reached for the expansion of the scope was that a review should be held after 6 months of operation to ensure that the best organizational structure had been found. At the time of writing that review had just begun.

A3.3 List of the Chairpersons in T1P1 and JTC[2]

Group	Name	Terms of Office Start	Terms of Office End
T1P1			
T1P1 chairs	Mel Woinsky	February 1994	February 1998
	Asok Chatterjee	February 1998	Expires February 2002
T1P1 vice-chairs	Mel Woinsky	February 1991	February 1994
	Jim Papadouplis	February 1994	February 1996
	Stephen Hayes	February 1996	June 1996
	Asok Chatterjee	June 1996	February 1998
	Mark Younge	February 1998	Expires February 2002
T1P1 working groups			
T1P1.4 chair	Ed Ehrlich	April 1995	July 1996
T1P1.5 chair	Ed Ehrlich	February 1996	February 2000
T1P1.5 vice-chair	Quent Cassen	February 1996	February 1998
	Don Zelmer	February 1998	February 2000
JTC			
Co-chairs	Gary Jones	February 1993	July 1996
	Charles Cook	February 1993	April 1995
	Ed Ehrlich	April 1995	July 1996

A3.4 Officials of 3GPP[3]

TSG/WG	Position	Name	Start date	End date
CN	Convenor	Stephen Hayes	1998-12-07	1999-03-03
	Chairman	Dettner Harald	1999-03-03	2000-03-15
	Chairman	Stephen Hayes	2000-03-15	
CN 1	Convenor	Hannu Hietalahti	1998-12-07	1999-03-22
	Chairman	Hannu Hietalahti	1999-03-22	
CN 2	Convenor	Masami Yabasaki	1998-12-07	1999-03-01
	Chairman	Ian David Chalmer Park	1998-12-07	2000-03-17
	Convenor	Keiijo Palviainen	2000-03-17	2000-05-26
	Chairman	Keiijo Palviainen	2000-05-26	
CN 3	Joint Convenors	Oscar Lopez-Torres and Norbert Klehn	1998-12-07	1999-03-15
	Chairman	Norbert Klehn	1999-03-15	
CN 4	Convenor	Yun Chao Hu	2000-05-26	
	Chairman	Yun Chao Hu	1999-11-04	2000-03-17

[2] Editor: Don Zelmer
[3] Editor: Adrian Scrase

Ex. 1101
APPLE INC. / Page 42 of 44

TSG/WG	Position	Name	Start date	End date
CN 5	Convenor	Lucas Klostermann	2000-03-17	2000-05-25
	Chairman	Lucas Klostermann	2000-05-26	
CN ITU-T	Chairman	Masami Yabusaki	2000-03-17	
GERAN	Convenor	Niels Peter Skov Andersen	2000-07-31	2001-04-02
	Chairman	Niels Peter Skov Andersen	2001-04-02	
GERAN 1	Convenor	Niels Peter Skov Andersen	2000-08-28	2001-04-03
	Chairman	Niels Peter Skov Andersen	2001-04-03	
GERAN 2	Convenor	Jean-Francois Minet	2000-09-04	2000-11-10
	Chairman	Bruno Landais	2000-11-10	
GERAN 3	Convenor	Ake Busin	2000-08-28	2000-11-06
	Chairman	Ake Busin	2000-11-06	
GERAN 4	Convenor	Jean Marc Recouvreux	2000-08-28	2000-11-22
	Chairman	Jean-Marc Recouvreux	2000-11-23	
RAN	Convenor	Akio Sasaki	1998-12-07	1999-03-01
	Chairman	Yukitsuna Furuya	1999-03-01	2001-03-13
	Chairman	Francois Courau	2001-03-13	
RAN 1	Convenor	Yukitsuna Furuya	1998-12-07	1999-02-22
	Chairman	Antti Toskala	1999-02-22	
RAN 2	Convenor	Denis Fauconnier	1998-12-07	1999-03-08
	Chairman	Denis Fauconnier	1999-03-09	
RAN 3	Convenor	Per Willars	1998-12-07	1999-04-26
	Chairman	Per Willars	1999-04-26	2001-02-26
	Chairman	Martin Israelsson	2001-02-26	
RAN 4	Convenor	Howard Benn	1998-12-07	1999-02-15
	Chairman	Howard Benn	1999-02-15	
SA	Convenor	Fred Harrison	1998-12-07	1999-03-01
	Chairman	Niels Peter Skov Andersen	1999-03-01	
SA 1	Convenor	Alan Cox	1998-12-07	1999-03-10
	Chairman	Alan Cox	1999-03-10	2001-02-08
	Chairman	Kevin Holley	2001-02-08	
SA 2	Convenor	Yukio Hiramatsu	1998-12-07	1999-03-01
	Chairman	Teuvo Jarvela	1999-03-01	2001-02-26
	Chairman	Mikko Puuskari	2001-02-26	
SA 3	Convenor	Michael Walker	1998-12-07	1999-03-27
	Chairman	Michael Walker	1999-03-27	
SA 4	Convenor	Kari Järvinen	1998-12-07	1999-03-01
	Chairman	Alain Ohana	1999-03-01	2000-06-28
	Chairman	Kari Järvinen	2000-06-28	
SA 5	Convenor	Inaki Cabrera	1998-12-07	1999-03-01
	Chairman	Albert Yuhan	1999-03-01	
T	Convenor	Sang Keun Park	1998-12-07	1999-03-01
	Chairman	Sang Keun Park	1999-03-01	

TSG/WG	Position	Name	Start date	End date
T 1	Convenor	Remi Thomas	1998-12-07	1999-03-01
	Chairman	Bjarke Nielsen	1999-03-01	
T 2	Convenor	Kevin Holley	1998-12-07	1999-03-01
	Chairman	Kevin Holley	1999-03-01	
T 3	Convenor	Klaus Vedder	1998-12-07	1999-03-01
	Chairman	Klaus Vedder	1999-03-01	
PCG	Chairman	Karl Heinz Rosenbrock	1999-03-04	2000-12-31
	Chairman	Akio Sasaki	2001-01-01	

A3.5 List of the Chairpersons in the GSM MoU Group/Association and GSM Association[4]

Name	Start date	End Date
Armin Silberhorn	September 1987	March 1988
Philippe Dupuis	March 1988	September 1988
Renzo Failli	September 1988	March 1989
Ted Beddoes	March 1989	September 1989
Gunnar Fremin	September 1989	March 1990
Dick Hoefsloot	March 1990	September 1990
Petter Bliksrud	September 1990	March 1991
Miguel Menchen	March 1991	September 1991
Arne Foxman	September 1991	March 1992
Kari Marttinen	March 1992	March 1993
George Schmitt	March 1993	March 1994
Bruno Massiet du Biest	March 1994	March 1995
Mike Short	March 1995	March 1996
Gretel Holcomb Hoffman	March 1996	March 1997
Adriana Nugter	March 1997	April 1998
Richard Midgett	May 1998	April 1999
Michael Stocks	May 1999	April 2000
Jim Healy	May 2000	April 2001
Scott Fox	May 2001	April 2002

[4] Editor: Friedhelm Hillebrand.

Anne

3G
3GPP

3GPP2

ACTS

AMPS

AMR
ANSI
ARIB
CAMEL
CDMA

CEPT
CN
CR
CWTS
DCS1800

DECT
Doc
EDGE
EGPRS
ETSI
FPLMTS

GERAN
GHz
GPRS
GSM

GSM#1, 2, 3,
GSM1, 2, 3, e
GSM400, 900