US 20080167039A1

(19) United States

(12) Patent Application Publication

(10) Pub. No.: US 2008/0167039 A1

(43) Pub. Date: Jul. 10, 2008

Guedalia et al.

(54) METHODS AND SYSTEMS OF PROVIDING LOCAL ACCESS NUMBER CALLING FEATURES

(76) Inventors: **Jacob Guedalia**, Newton, MA (US); **Isaac David Guedalia**, Bet Shemesh (IL)

Correspondence Address:
PEPPER HAMILTON LLP
ONE MELLON CENTER, 50TH FLOOR, 500 GRANT STREET
PITTSBURGH, PA 15219

(21) Appl. No.: 11/948,365

(22) Filed: Nov. 30, 2007

Related U.S. Application Data

(60) Provisional application No. 60/883,841, filed on Jan. 8, 2007, provisional application No. 60/884,045, filed on Jan. 9, 2007, provisional application No. 60/889,305, filed on Feb. 12, 2007, provisional application No. 60/889,959, filed on Feb. 15, 2007, provisional application No. 60/896,003, filed on Mar. 21, 2007, provisional application No. 60/908,726, filed on Mar. 29, 2007, provisional application No. 60/940,758, filed on May 30, 2007, provisional application No. 60/942,557, filed on Jun. 7, 2007, provisional application No. 60/945,931, filed on Jun. 24, 2007, provisional application No. 60/947,963, filed on Jul. 4, 2007.

Publication Classification

(51) Int. Cl.
H04Q 7/22 (2006.01)

(52) U.S. Cl. 455/435.2

(57) **ABSTRACT**

In an embodiments a method of providing a local access number to a subscriber may include receiving subscriber locale information indicating a location of a subscriber, mapping the subscriber locale information to one or more local access numbers, identifying, from the one or more local access numbers, a local access number corresponding to the subscriber locale information and transmitting the identified local access number to the subscriber's mobile device.

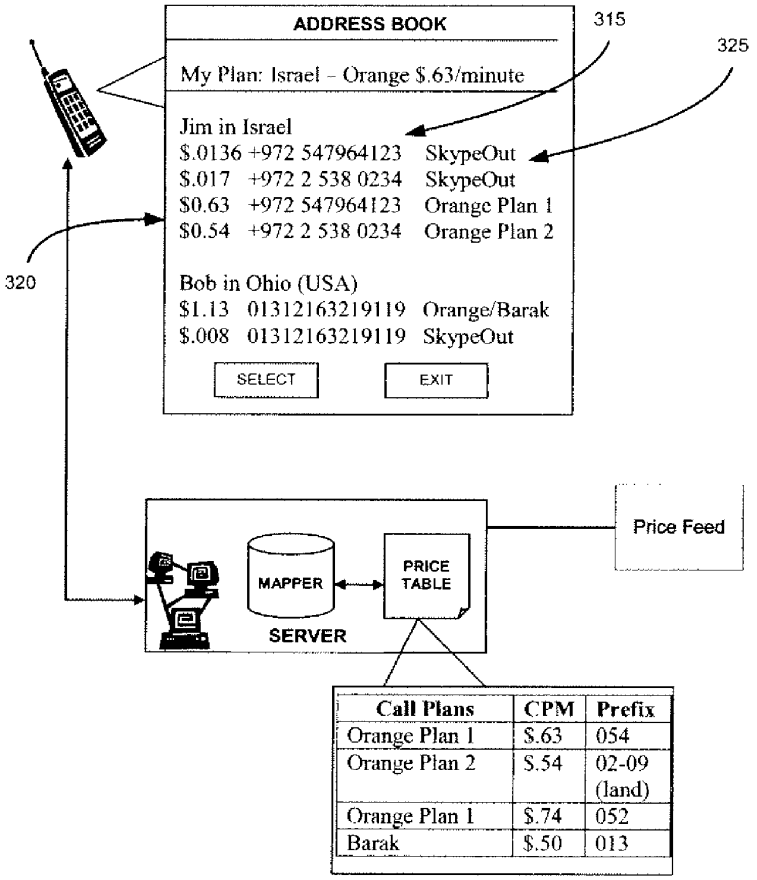

Call Plans	CPM	Prefix
Orange Plan 1	$.63	054
Orange Plan 2	$.54	02-09 (land)
Orange Plan 1	$.74	052
Barak	$.50	013

META 1014
META V. VOIP-PAL

GOOGLE EXHIBIT 1014

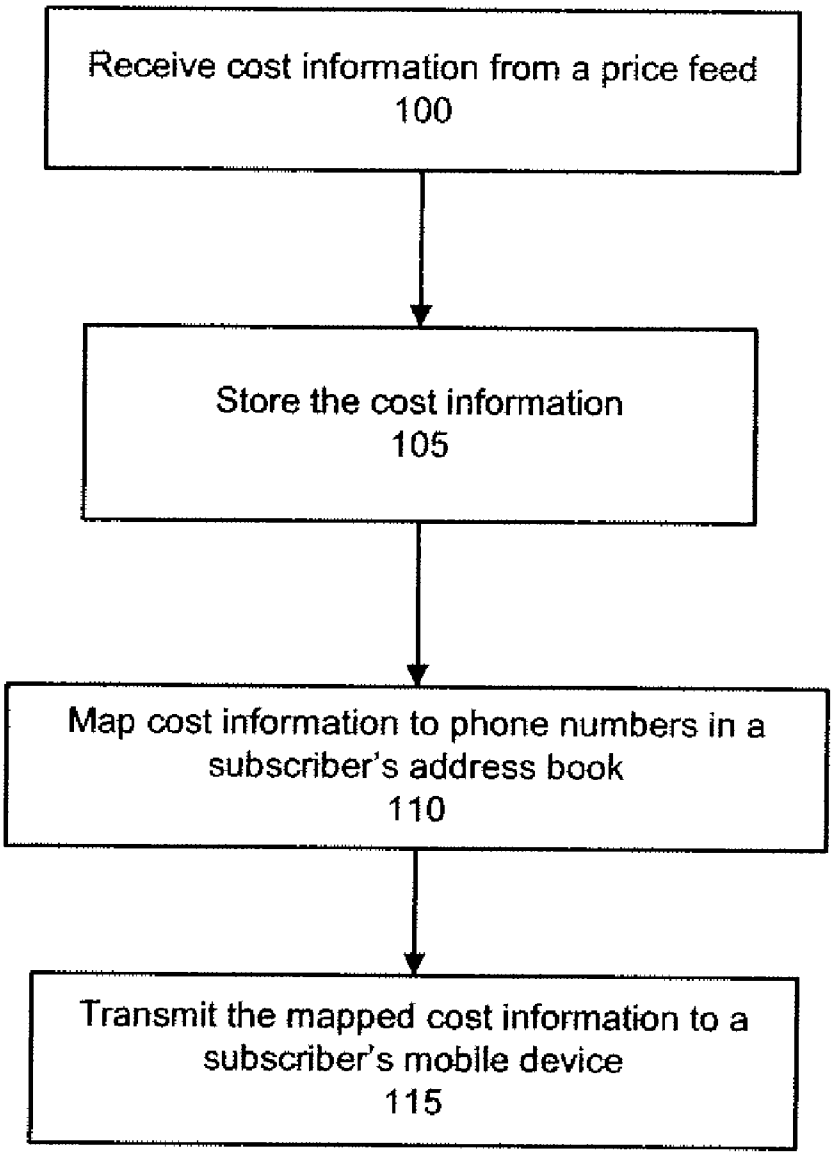

FIG. 1

META 1014
META V. VOIP-PAL

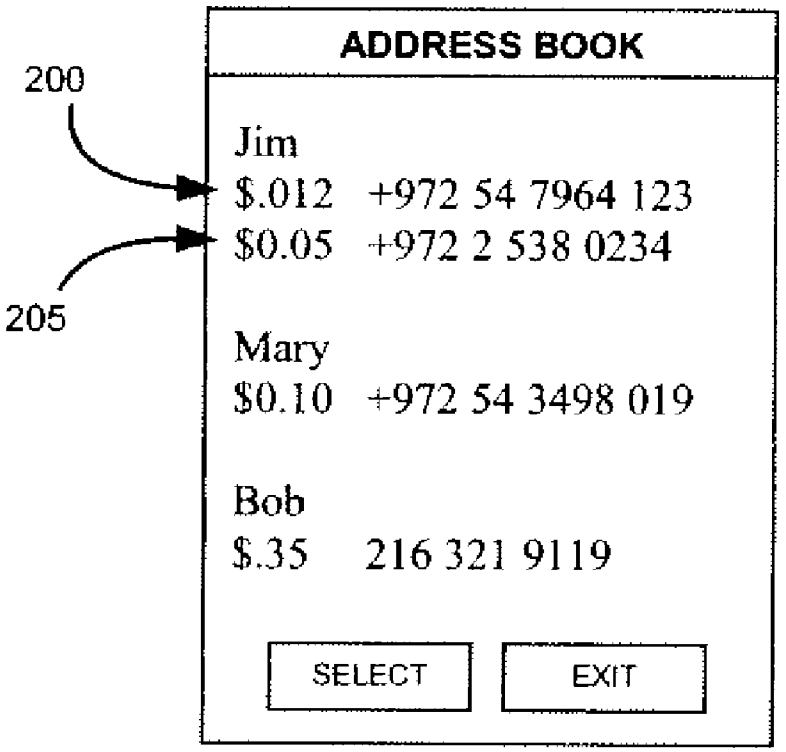

FIG. 2

META 1014
META V. VOIP-PAL

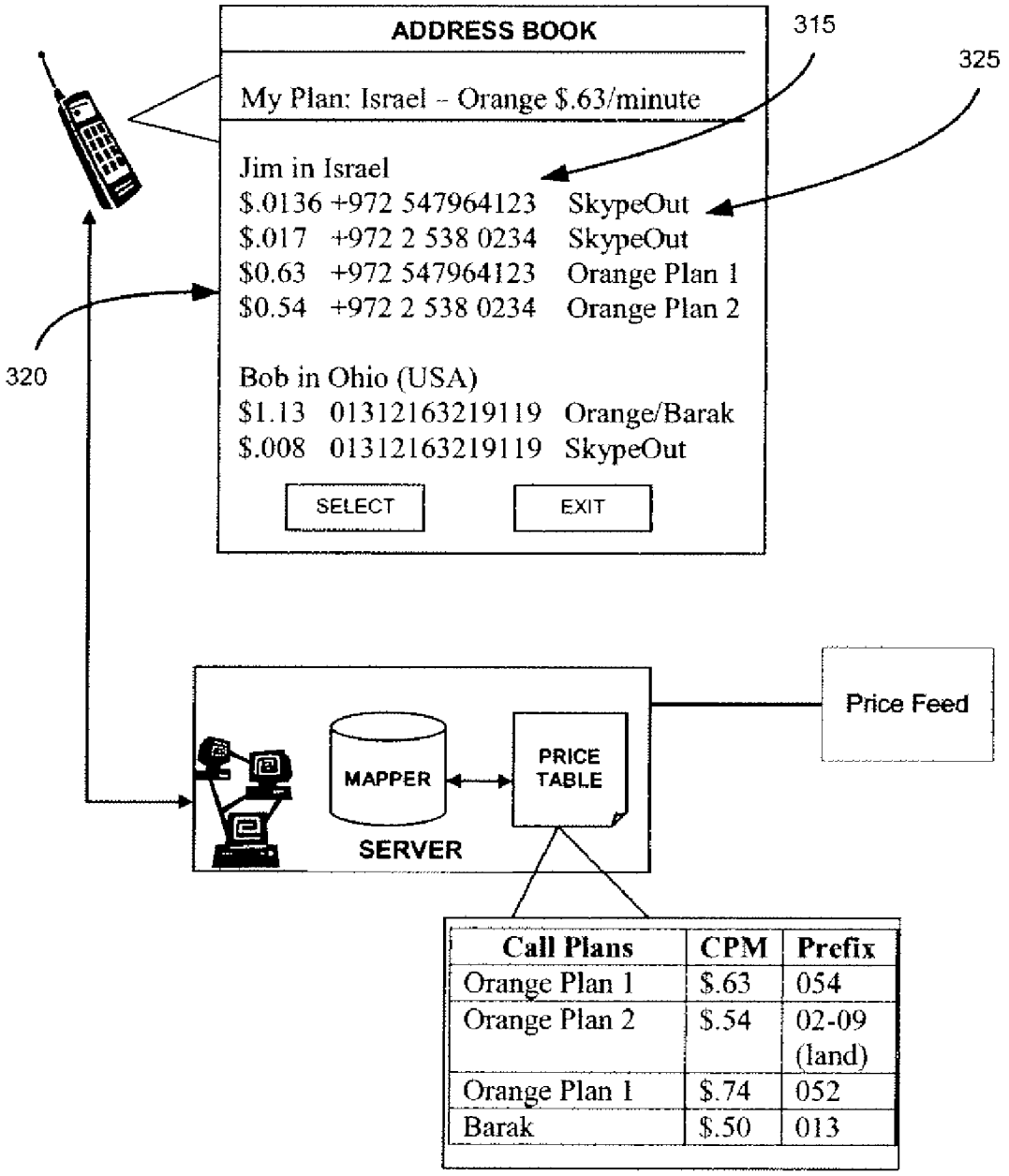

Call Plans	CPM	Prefix
Orange Plan 1	$.63	054
Orange Plan 2	$.54	02-09 (land)
Orange Plan 1	$.74	052
Barak	$.50	013

FIG. 3

META 1014
META V. VOIP-PAL

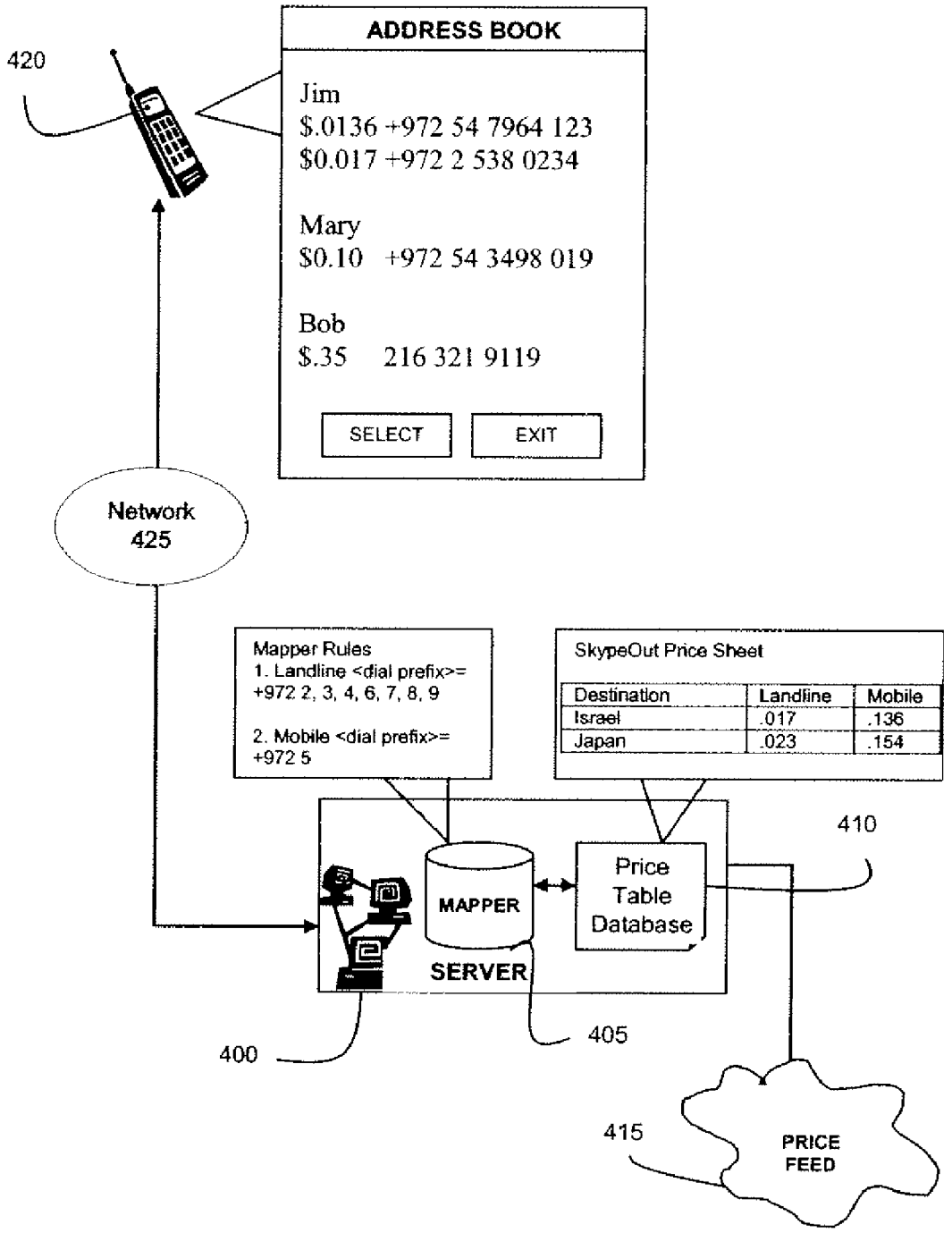

Fig. 4

META 1014
META V. VOIP-PAL

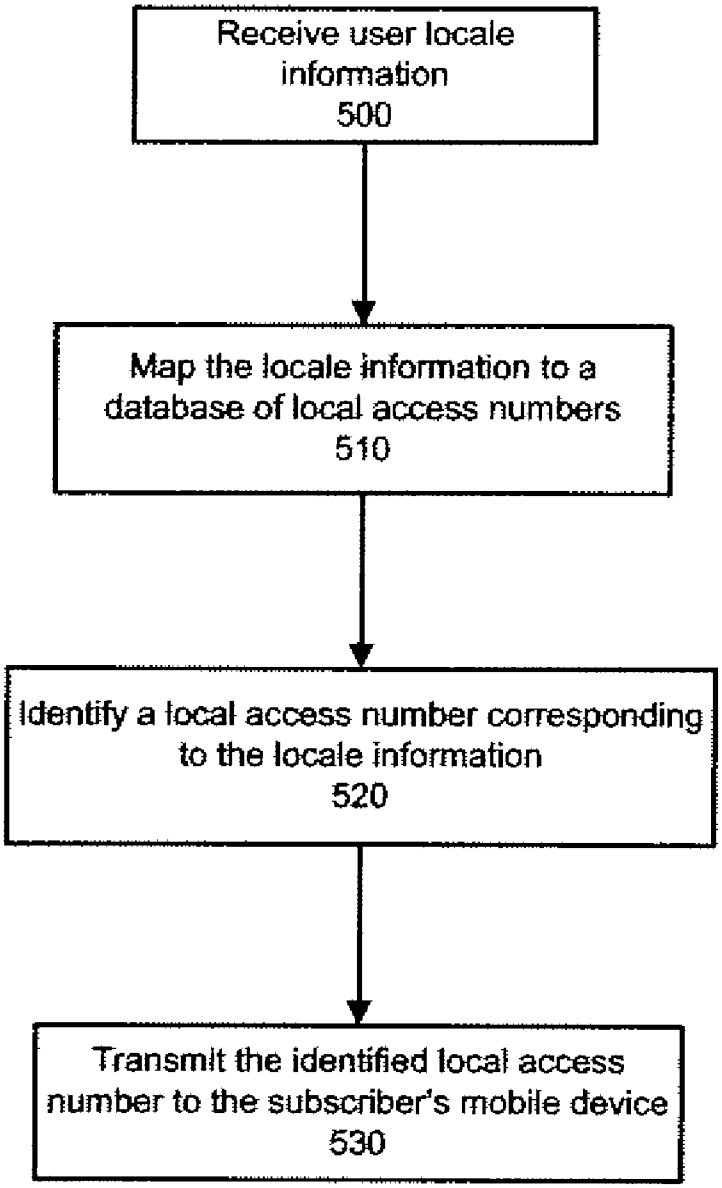

FIG. 5

META 1014
META V. VOIP-PAL

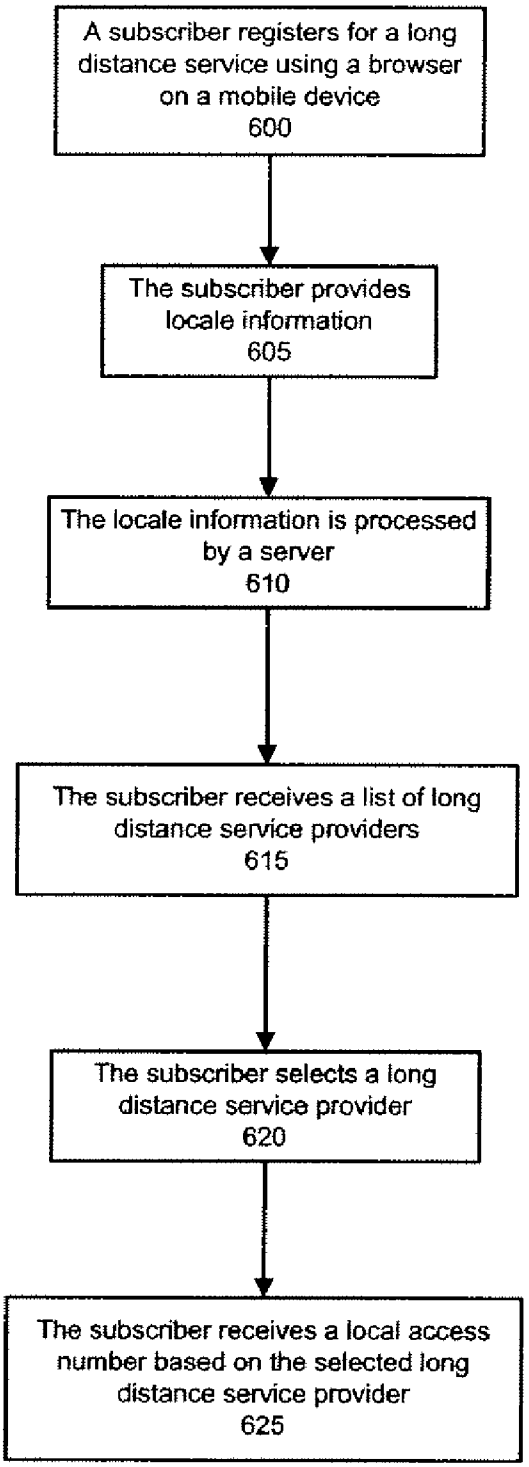

FIG. 6

META 1014
META V. VOIP-PAL

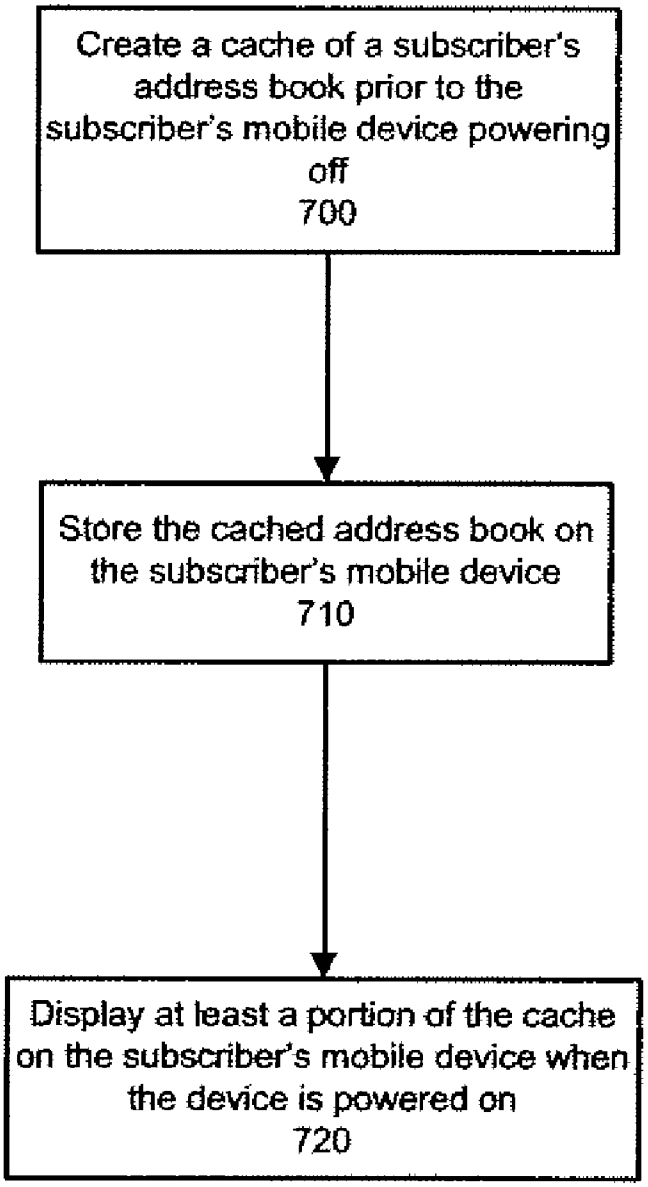

FIG. 7

META 1014
META V. VOIP-PAL

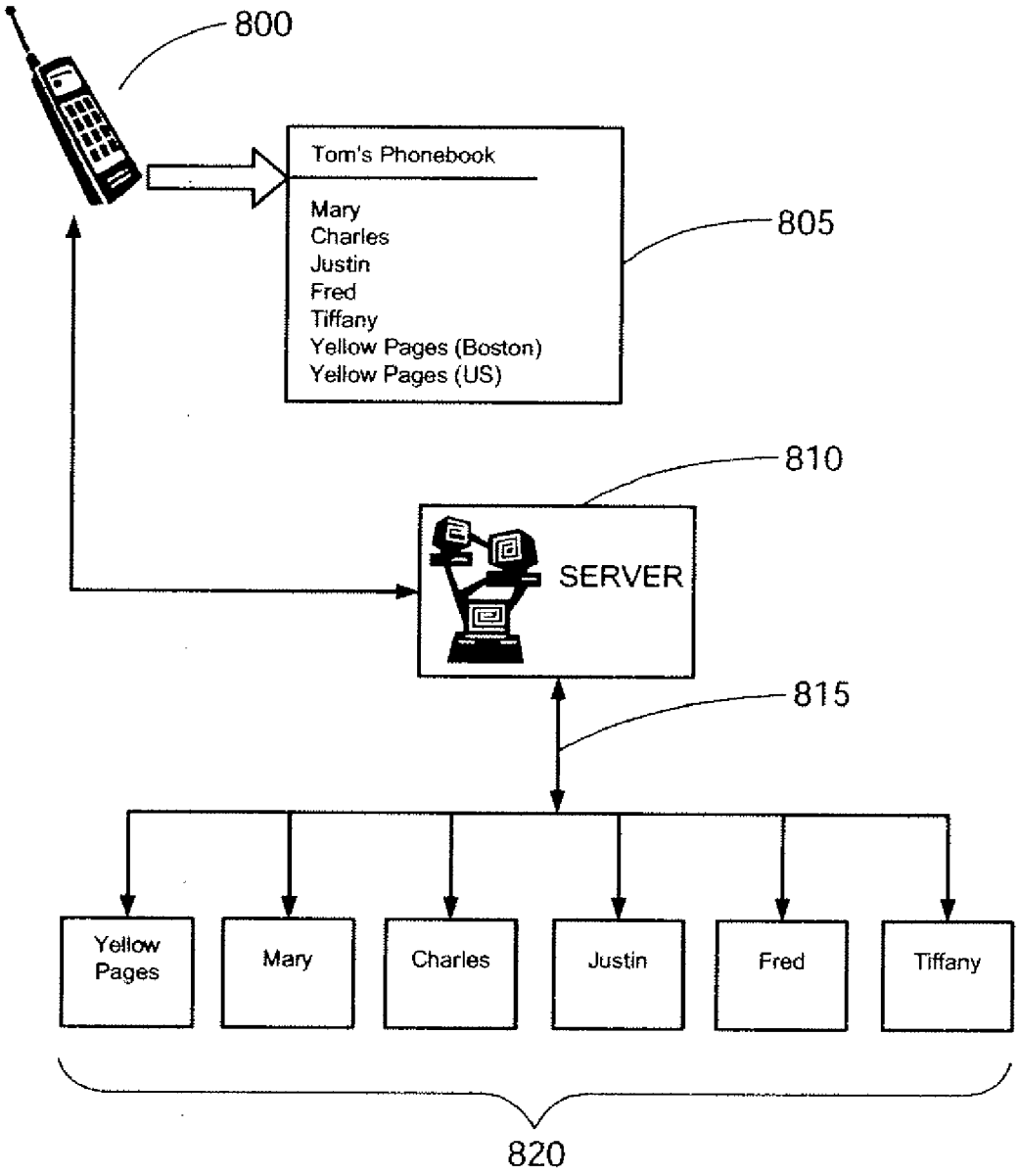

FIG. 8

META 1014
META V. VOIP-PAL

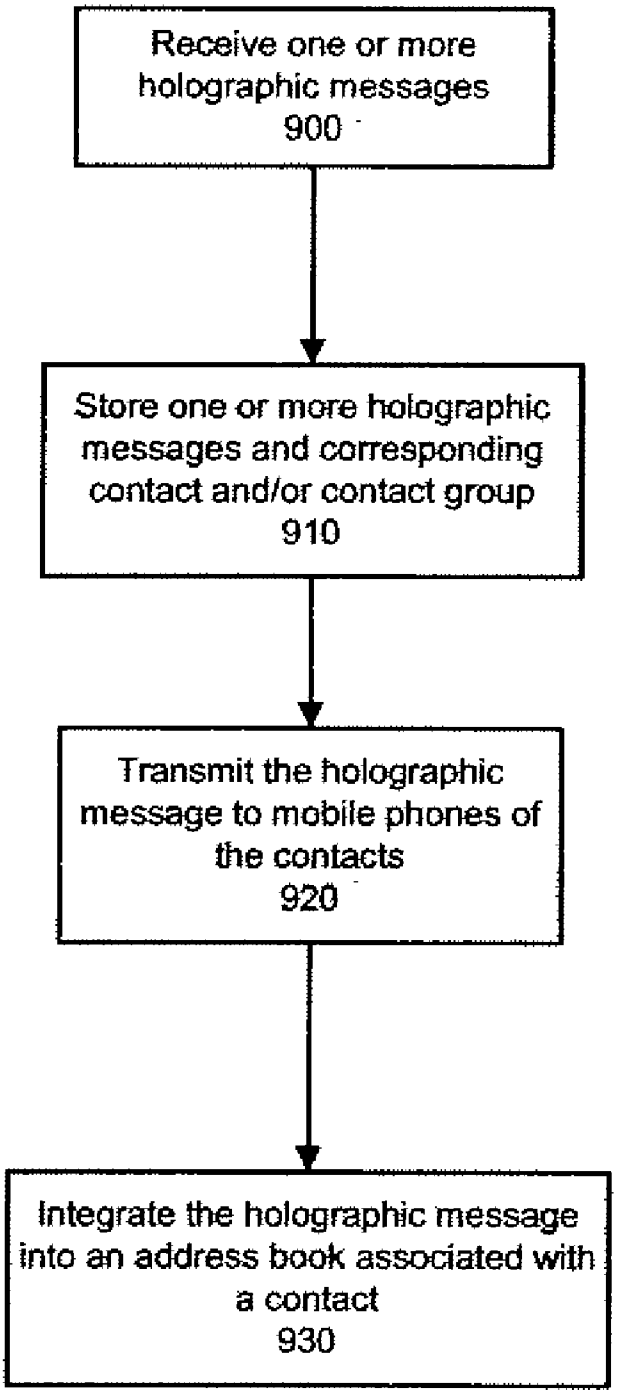

FIG. 9

META 1014
META V. VOIP-PAL

METHODS AND SYSTEMS OF PROVIDING LOCAL ACCESS NUMBER CALLING FEATURES

CLAIM OF PRIORITY

[0001] This application claims priority under 35 U.S.C. § 119(e) to U.S. Provisional Application No. 60/883,841, filed Jan. 8, 2007, U.S. Provisional Application No. 60/884,045 filed Jan. 9, 2007, U.S. Provisional Application No. 60/889,305, filed Feb. 12, 2007, U.S. Provisional Application No. 60/889,959, filed Feb. 15, 2007, U.S. Provisional Application No. 60/896,003, filed Mar. 21, 2007, U.S. Provisional Application No. 60/908,726, filed Mar. 29, 2007, U.S. Provisional Application No. 60/940,758, filed May 30, 2007, U.S. Provisional Application No. 60/942,557, filed Jun. 7, 2007, U.S. Provisional Application No. 60/945,931, filed Jun. 24, 2007, and U.S. Provisional Application No. 60/947,963, filed Jul. 4, 2007, the entireties of which are incorporated by reference herein.

BACKGROUND

[0002] As the mobile telecommunication industry grows, mobile subscribers are becoming increasingly more aware of their leverage in the market. They carefully compare service providers and call plans, and make educated choices before subscribing to a carrier and a service. Subscribers also continuously seek new and improved features to integrate into their mobile service such as enhanced chat, long distance service options, customized graphical user interfaces and the like.

[0003] Despite being informed consumers, mobile subscribers are often disadvantaged in the mobile market. For example, although a subscriber may be knowledgeable about their own calling plan subscription, subscribers are usually unaware of the cost per minute of a call to the calling destination. This puts a mobile subscriber at a disadvantage in making educated and economical calling choices.

[0004] Mobile subscribers would also welcome more long distance service options. A subscriber to a telecommunication carrier service typically needs a local access number to utilize the service. This usually involves selecting a number from a list of regional or area numbers, such as a preprinted list on a calling card, to find the access number closest to the subscriber's current location. The subscriber dials the local access number and is usually connected to a long distance service provider via a telephony network, Typically, the subscriber can then enter a target long distance telephone number, and the long distance service provider will route the call to a subscriber-specified number. The current approach has many disadvantages however, such as having to purchase a phone care and locating a local access number. In addition, a subscriber who accidentally places a call using a non-local access number may incur long distance charges.

[0005] It is common for a subscriber to experience a significant delay after powering on his mobile device before he is able to access updated contact information in his address book. This is because the mobile device must contact and retrieve an updated contact list from a server. As such, subscribers may desire to access his address book while the contact information is being updated.

[0006] To keep pace with the constant evolution of mobile telephony, mobile subscribers are treated to a variety of applications designed to optimize their mobile communication experience. For example, subscribers can access the Internet with the mobile device, send chat messages to their contacts and the like. Subscribers can glean relevant and up-to-date information about their contacts in their address books by viewing presence-statuses, away messages, sometimes referred to as status messages, mood messages or the like. However, it is common for a subscriber's status message to read the same regardless of which contact views it. As such, a subscriber cannot customize his status message based on the contact who is viewing it.

SUMMARY

[0007] Before the present methods are described, it is to be understood that this invention is not limited to the particular systems, methodologies or protocols described, as these may vary. It is also to be understood that the terminology used herein is for the purpose of describing particular embodiments only, and is not intended to limit the scope of the present disclosure which will be limited only by the appended claims.

[0008] In an embodiment, a method of providing a local access number to a subscriber may include receiving subscriber locale information indicating a location of a subscriber, mapping the subscriber locale information to one or more local access numbers, identifying, from the one or more local access numbers, a local access number corresponding to the subscriber locale information and transmitting the identified local access number to the subscriber's mobile device.

[0009] In an embodiment, a method of placing a call using a local access number may include transmitting subscriber locale information to a processor, receiving, from the processor, one or more long distance service providers, selecting a long distance service provider from the plurality of long distance service providers and receiving a local access number based on the selected long distance service provider.

[0010] In an embodiment, a system for providing a local access number to a subscriber may include one or more mobile devices, a processor in communication with the one or more mobile devices and a processor-readable storage medium comprising locale information and one or more local access numbers, wherein the processor-readable storage medium is in communication with the processor.

BRIEF DESCRIPTION OF THE DRAWINGS

[0011] FIG. **1** depicts a flow chart for implementing an exemplary call-cost feature on a mobile device.

[0012] FIG. **2** depicts a mobile device display of exemplary cost information according to an embodiment.

[0013] FIG. **3** depicts an exemplary system of providing cost information according to an embodiment.

[0014] FIG. **4** depicts an exemplary system of providing cost information according to an embodiment.

[0015] FIG. **5** illustrates flow chart for assigning an exemplary local access number according to an embodiment.

[0016] FIG. **6** illustrates a method of placing an exemplary long distance call using a local access number according to an embodiment.

[0017] FIG. **7** illustrates a flow chart for an exemplary method of accessing contact information on a subscriber's mobile device according to an embodiment.

[0018] FIG. **8** illustrates an exemplary system for implementing mobile address book interaction according to an embodiment.

META 1014
META V. VOIP-PAL

[0019] FIG. **9** illustrates an exemplary method of providing contact information according to an embodiment.

I. DETAILED DESCRIPTION

[0020] FIG. **1** illustrates a flow chart for implementing an exemplary call-cost feature on a mobile device. A mobile device may include mobile or portable devices such as cellular phones, PDAs, media players or the like. A mobile device may have a processor and a processor-readable storage medium in communication with the processor.

[0021] As illustrated by FIG. **1**, a price table database may receive **100** cost information from a price feed. A price feed provides real time pricing information for a product or service. For example, stock prices may be available to an online trader via a price feed.

[0022] In an embodiment, the price table database may be housed on a computing device, such as a server, and the cost information may include the cost per minute for a plurality of calling destinations or the like. Table 1 illustrates an exemplary price table database according to an embodiment.

TABLE 1

Calling Destination	Cost per minute
Canada	$0.33/minute
France	$0.56/minute
Israel	$0.35/minute
United States	$0.15/minute

[0023] The price table database may receive **100** cost information from the price feed on a regular basis. In an embodiment, the price feed may include a rate sheet provided by a telephone service provider.

[0024] In an embodiment, at least a portion of the received cost information may be stored **105** in the price table database. For example, the price table database may receive a cost-per-minute for calling Canada. If the price table database does not currently include a cost-per-minute for Canada, the cost information may be added to the price table database. If the price table database includes a different cost-per-minute for Canada, the stored cost information may be replaced with the cost information from the price feed. In an embodiment, if the received cost information associated with a calling destination is less than the stored cost information associated with the calling destination, an alert may be generated. The alert may be used to notify a subscriber of the price discount associated with the particular calling destination. In an embodiment, the server may transmit the alert to a subscriber's mobile device to notify the subscriber of the price discount.

[0025] A mapper may use the cost information contained in the price table database to map **110** cost information to one or more phone numbers in a subscriber's address book. In an embodiment, the mapper may utilize pre-defined rules to map **110** cost information to a contact number. A contact is an entry in an address book that is accessible by a mobile device. A contact number is a mobile device number associated with a contact. In an embodiment, the mapper may map **110** cost information to one or more contact numbers using pre-defined rules. The pre-defined rules may be used to determine, for example, a calling destination, whether the phone number belongs to a landline or a mobile device, or the like. For example, in Israel, landlines are provisioned with the country code +972 followed by an area code ranging from '1' to '9', with the exception of '5.' Mobile phone numbers typically begin with '5.' If a subscriber has the phone number "972-2-5388-0234" in his address book, the mapper may use one or more pre-defined rules to determine the contact number is a landline number is Israel. The mapper may use this information to map the corresponding cost per minute to one or more contact numbers in a subscriber's address book.

[0026] In an embodiment, the mapped cost information may be transmitted to the subscriber's mobile device for display to the subscriber. FIG. **2** depicts a mobile phone display of exemplary cost information according to an embodiment. As illustrated, the cost to call one or more contacts in a subscriber's address book may be displayed. For example, calling Jim on his mobile phone costs $0.0136/minute **200**, whereas calling Jim on his landline phone costs $0.017/minute **205**. The subscriber may use this information to make an informed calling decision regarding which number to call.

[0027] In an embodiment, cost information may be provided based on associated calling plans. As illustrated by FIG. **3**, the price table database may include cost information such as mobile providers' calling plans **300**, a cost-per-minute value **305** associated with the calling plans, a dialing prefix **310** provisioned for each calling plan and/or the like. In an embodiment, the price table database may receive this cost information from the price feed on a regularly updated basis.

[0028] In an embodiment, the mapper may map a contact's number with the subscriber's calling plan and the corresponding cost information may be displayed to a subscriber. One or more contacts in a subscriber's address book may be displayed with cost information based on the subscriber's and/or the contact's calling plan. For example, FIG. **3** illustrates exemplary information that may be displayed on a mobile device. A contact's number **315** may be listed with a cost-per-minute value **320** and a calling plan **325** associated with the number **315**.

[0029] In an embodiment, the mapper may use a contact's phone number to determine calling destination information such as a contact's locale, whether the contact's number corresponds to a landline or a mobile phone or the like. After calling destination information is determined, the mapper may map at least a portion of the calling destination information to the subscriber's calling plan. For example, a subscriber may want to call a contact who has two numbers. The first number may be a landline in Israel while the second number may be a mobile phone in Israel. The mapper may match the subscriber's calling plan with the destination information to determine that cost information associated with calling the two numbers.

[0030] In an embodiment, multiple service providers may be used to place a call. In such an embodiment, the mapper may map cost information associated with all necessary providers so that a combined price may be displayed to a subscriber. For example, if a subscriber calls an overseas contact using a long-distance service provider, the cost-per-minute may reflect both the long distance provider's charges as well as the local mobile carrier's airtime charges.

[0031] FIG. **4** depicts an environment suitable for practicing the illustrative embodiments. A processor, such as a server **400** may include a mapper **405** and/or a price table database **410**. The server **400** may be in communication with a price feed **415** and one or more mobile devices **420** via a network **425**. The server **400** may be implemented on a stand-alone

META 1014
META V. VOIP-PAL

computer system or may be implemented by distributed components such as separate electronic devices.

[0032] In an embodiment, a subscriber may use a local access number to place a long distance call. A local access number is a local telephone number a subscriber may employ to connect to a certain long distance service provider. FIG. **5** illustrates an exemplary flow chart of a method for assigning a local access number according to an embodiment. A subscriber's locale information may be received **500** by a server. In an embodiment, a subscriber may use a mobile device to subscribe to a telecommunication service via a data line. For example, a subscriber may access a browser to transmit an HTTP request. Upon registration, a subscriber may provide locale information such as an area code and a telephone number, a zip code or the like corresponding to the subscriber's current location. The locale information may be communicated to a server.

[0033] In another embodiment, locale information may be automatically received **500** by a server. For example, the locale information may be transmitted via an HTTP browser to a server where it may be processed by a service delivery framework (SDF). The SDF may be aware of the subscriber locale information, such as a Mobile Systems International Subscriber identity Number (MSISDN), and may insert such information into an HTTP header. The header may be transmitted to the server where the mapper may extract the locale information.

[0034] In an embodiment, the mapper may map **510** the locale information to a database of available access numbers. A local access number may be identified **520** based on the subscriber's current location and the identified local access number may be transmitted **530** to the subscriber's mobile device.

[0035] In an embodiment, the mapper may generate a list of long distance service providers having local access numbers corresponding to the subscriber's locale. The server may transmit the list via a data line to the subscriber's mobile device. The subscriber may select a long distance service provider, and may receive the corresponding local access number on his mobile device.

[0036] In an embodiment, the subscriber may use the local access number to connect to a chosen long distance service provider. The subscriber may manually input the local access number, followed by the desired long-distance phone number. Alternatively, the subscriber may employ an application, such as an address book, to automate this process. For example, a mobile device's address book may include a long-distance automatic dialing feature that allows for quick-dialing of a previously entered local access code.

[0037] In an embodiment, an existing address book may be populated with the local access number for future retrieval. In an embodiment, as a subscriber travels, his mobile device may receive and store new local access numbers based on his current location.

[0038] FIG. **6** illustrates a method of placing a long distance call using a local access number according to an embodiment. For example, subscriber who wants to make a third-party long distance call may register **600** for a long distance service using a browser on his mobile device. Upon registration, the subscriber may be asked to provide **605** locale information, such as a local telephone number with an area code. The locale information may be processed **610** by the server, and the subscriber may receive **615** a list of one or more long distance service providers. The subscriber may select **620** a long distance service provider and may receive **625** a local access number based on the selected long distance provider on his mobile device. The subscriber may employ the local access number for as long as he remains in his current location. If the subscriber's address book is equipped with a long distance auto-dial feature, it may be automatically populated with the local access number when the server transmits it to the mobile device. If the subscriber changes locations, he may access his account on the subscription site, enter a new telephone number and area code, and receive a new local access number. The subscriber's old access number may be stored for later use.

[0039] In an embodiment, a local access number may be automatically dialed for the subscriber, and may or may not require subscriber confirmation. As such, the subscriber may only need to specify the preferred long distance number to call. For example, a subscriber may select or input the preferred long distance number to call, and an application on the mobile device may place the call by automatically dialing the access code local to the subscriber's local information. As described above, the locale information may be ascertained based on the telephone number provided by the subscriber at sign-up or by extracting the subscriber locale information from an HTTP header.

[0040] For example, a mobile user who wants to place a long distance call may select a contact from his address book to call. The subscriber's long distance subscription service may ascertain the subscriber's location by extracting locale information from an HTTP header transmitted by the subscriber's phone or by the locale information the subscriber provided at sign-up. The server may map the subscriber's location to an appropriate local access number which may be sent to the subscriber's mobile device. The subscriber may make one or more selections to dial the received local access number. Alternatively, the service may auto-dial the local access number and connect the call without the subscriber being aware that a local access number has been dialed.

[0041] FIG. **7** illustrates a flow chart for an exemplary method of accessing contact information on a subscriber's mobile device according to an embodiment. When a subscriber first accesses a server-based mobile address book application, the subscriber may experience a significant delay while the address book attempts to retrieve the subscriber's address book from the server. In an embodiment, a cache of the address book may be created **700** before the subscriber's mobile device is powered off. The cache may include contact information stored in the subscriber's address book during the last application session. For example, the cache may include a contact's name, one or more telephone numbers associated with the contact, a status message associated with the contact and/or the like.

[0042] In an embodiment, a status message indicates whether the contact is online, offline or the like. A status message includes information relating to a status or state of a subscriber, and can be presented automatically to anyone who attempts to contact the subscriber. The status message may provide further information regarding the subscriber. In an embodiment, exemplary status messages may include "Having a bad day," "In a meeting," "At the gym," or the like.

[0043] In an embodiment, the cache may be stored **710** on the subscriber's mobile device. When a subscriber powers on his mobile device, at least a portion of the cache may be displayed **720** to a subscriber until a fresh upload of contact information can be obtained from the server. For example,

META 1014
META V. VOIP-PAL

when a subscriber accesses an address book application after powering on his mobile device, the subscriber may be presented with a cached version of his address book that may include contacts' names, telephone numbers, status message and/or the like which were stored in the cache prior to the mobile device being powered off.

[0044] In an embodiment, because the server may take a significant amount of time to upload a complete fresh address book, contacts may be updated in a particular order according to an embodiment. For example, the first several contacts that appear in a subscriber's mobile device display may have their information updated first. Alternatively, priority may be given to one or more pre-determined contacts.

[0045] A problem may arise when a subscriber attempts to call a contact's telephone number using a cached address book. In an embodiment, the cached information may include a contact identification number associated with a contact and/or a unique session identification number. A contact identification number is a unique identifier associated with a certain contact in an address book. A session identification number is a unique identifier associated with a calling period. The unique session identification number may remain valid for the length of an entire calling period, which, in an embodiment, may be the period of time from when the application is powered up and connected until the time that the application is powered down. A contact identification number may be assigned to each contact, and may remain valid for the duration of a calling period. In an embodiment, the unique session identification number and the contact identification numbers may expire after the calling period has closed, thus rendering them invalid for subsequent calling sessions. As such, when a subscriber attempts to call a contact with stale status information, the application may attempt to dial in with an expired session identification number and/or reference an expired contact identification number, which may result in call failure. While a delay may exist while the server refreshes and updates a subscriber's contact information, a service provider may want to give a subscriber a feeling of being logged onto the network as soon as the subscriber's mobile device is powered on.

[0046] For example, in an embodiment, if a subscriber selects a contact from the cached address book having expired status information, the contact's phone number may not be immediately dialed. Instead, the subscriber's mobile device may dial a server and may dispatch the name of the desired callee across a network. The server may send back a session identification number to be utilized during the calling period and/or a contact information number that references the callee. In an embodiment, the server may also send a local access number to be used to contact the callee. Alternatively, the call may be completed without the use of a local access number.

[0047] In an embodiment, if a subscriber selects a contact from the cached contact list having stale status information, a prepare call may be sent to the server. The prepare call may include a session identification number, a callee's contact identification number, a callee's contact name and the like. The server may send back a new session identification number for the subscriber, a contact information number that references the callee, a local access number to be used to contact the callee and/or the like.

[0048] In an embodiment, if a subscriber selects a contact from the cached contact list having stale status information, a direct inward dialing (DID) number of the callee may be directly dialed, and the dual-tone multi-frequency (DTMF) tones of the caller may be appended to a dial-string associated with the call. A DID number is a feature offered by telephone companies for use with customer's private branch exchange. A telephone company may allocate a range of numbers all connected to the customers' PBX. As the PBX receives calls, the number that the caller dialed may also be presented so the PBX can route the call to the target callee. For example, DID numbers may be obtained by administrators of a VoIP network and assigned to a gateway in the network. The gateway may route incoming calls from the network to appropriate VoIP subscribers.

[0049] In an embodiment, a set of DIDs may be assigned to a gateway. The gateway may then reassign the DIDs to a particular mapping of caller-callee. For example, Caller A may have ten contacts, A-K. Each contact may be assigned a unique DID number. When Caller A selects a contact from his cached contact list, Caller A is, in effect, selecting the DID number associated with the contact.

[0050] In an embodiment, if a subscriber selects a contact from the cached contact list having expired status information, a callee's DID number may be directly dialed, and the DID number and the identification number of the caller may appear within the dial-string.

[0051] In an embodiment, a subscriber may use an address book on the subscriber's mobile device to call one or more contacts stored in the address book. The subscriber may communicate with these contacts by dialing the contact directly, by sending chat messages or the like. FIG. **8** illustrates an exemplary system for implementing mobile address book interaction according to an embodiment. In addition to being stored locally on a mobile device **800**, the contact information in a subscriber's address book **805** may also be cached on a server **810** which may regularly update the address book information. The server may send information about the subscriber's contacts to the subscriber's mobile device **800** as it become available. In an embodiment, the subscriber's mobile device **800** may poll the server at specified intervals to receive updates about the subscriber's contacts. Updated information may he integrated into the subscriber's mobile address book **805** for the subscriber to access. In an embodiment, contact information may include a status message or the like.

[0052] As FIG. **8** illustrates, bidirectional communication **815** may exist between the server, the subscriber's mobile device and the contacts **820** who appear in the subscriber's address book. In an embodiment, the server may push information, such as a status message associated with the subscriber, to the contacts **820**. The server may also pull information from the contacts **820** for transmission to the subscriber's mobile device.

[0053] For example, if the subscriber wishes to change his status message, the subscriber may set a new status message using his mobile device. The new status message may then be sent to the server to be propagated to the subscriber's contacts. When the server receives and processes the new status message, the server may send the new status message to all of the subscriber's contacts.

[0054] FIG. **9** illustrates a method of providing contact information according to an embodiment. A server may receive **900** one or more status messages, such as a holographic message, from a subscriber's mobile device. A holographic message relates to customized messages that differ based on which contact inquires about the subscriber's status. That is, different contacts may be presented with different

META 1014
META V. VOIP-PAL

messages depending on the identity of the contact. The present discussion is intended to comprehend a one-to-one correspondence between messages and contacts, but is not so limited, and also includes messages directed to subsets of more than one contact. For example, a subscriber's holographic message may read "I'm in a meeting" to work colleagues, but may read "I'm unavailable" to all other contacts.

[0055] In an embodiment, a subscriber may set a holographic message using the subscriber's mobile phone. The subscriber may identify a message for a specific contact. For example, a subscriber may set a holographic message that reads "I'll be home at 6:30pm" to his wife. The subscriber may also set a holographic message for a specific contact group. For example, a subscriber may set a holographic message that reads "At the beach" to his friends.

[0056] In an embodiment, the holographic messages set by a subscriber may be sent to the server to be transmitted to the contacts in the subscriber's contact book. The server may store **910** a holographic message and corresponding contact or contact group. The server may transmit **920** the holographic message to the mobile phones of the appropriate contacts based on the contact's name, the contact's group or the like. In an embodiment, the server may integrate **930** the holographic message into an address book associated with a contact. The server may transmit one or more instructions to a contact's mobile device instructing the mobile device to display the holographic message.

[0057] In an embodiment, a list of most-recently called contacts may be kept. For example, the list may reflect the last ten contacts a subscriber called, chatted with, changed a status message for, or the like. Typically, a subscriber's address book is stored on a server, and a push presence technique is utilized to access contact information, such as a status message or the like. In an embodiment, the push presence technique requires a subscriber to retrieve the latest contact information from the server. However, a subscriber who as many contacts must access the server numerous times in order to view contact information, which may drain the battery of the subscriber's mobile device. As such, a list of most-recently called contacts may be kept. This list may be stored on a subscriber's mobile device or on the server. If the list is stored on the server, the server must only push the contact information associated with the contacts in the most-recently called list instead of the contact information for every contact in the subscriber's address book.

[0058] It will be appreciated that various of the above-disclosed and other features and functions, or alternatives thereof, may be desirably combined into many other different systems or applications. Also that various presently unforeseen or unanticipated alternatives, modifications, variations or improvements therein may be subsequently made by those skilled in the art which are also intended to be encompassed by the following claims.

What is claimed is:

1. A method of providing a local access number to a subscriber, the method comprising:
- receiving subscriber locale information indicating a location of a subscriber;
- mapping the subscriber locale information to one or more local access numbers;
- identifying, from the one or more local access numbers, a local access number corresponding to the subscriber locale information; and
- transmitting the identified local access number to the subscriber's mobile device.

2. The method of claim **1**, wherein receiving subscriber locale information comprises receiving, from the subscriber's mobile device locale information provided by the subscriber, wherein the locale information comprises a telephone number and an area code.

3. The method of claim **1**, wherein receiving subscriber locale information comprises automatically receiving the subscriber locale information from a browser on the subscriber's mobile device.

4. The method of claim **1**, wherein mapping the subscriber locale information comprises automatically determining, by a mapper, one or more local access numbers based on the received subscriber locale information.

5. A method of placing a call using a local access number, the method comprising:
- transmitting subscriber locale information to a processor;
- receiving, from the processor, one or more long distance service providers;
- selecting a long distance service provider from the plurality of long distance service providers; and
- receiving a local access number based on the selected long distance service provider.

6. The method of claim **5**, wherein transmitting subscriber locale information comprises transmitting subscriber locale information provided by a subscriber, wherein the subscriber locale information comprises a telephone number and an area code.

7. The method of claim **5**, wherein transmitting subscriber locale information comprises automatically transmitting subscriber locale information from a browser on a mobile device.

8. The method of claim **5**, wherein receiving a local access number comprises automatically populating an address book on a mobile device with the local access number.

9. A system for providing a local access number to a subscriber comprising:
- one or more mobile devices;
- a processor in communication with the one or more mobile devices; and
- a processor-readable storage medium comprising locale information and one or more local access numbers, wherein the processor-readable storage medium is in communication with the processor.

* * * * *

META 1014
META V. VOIP-PAL