US008542815B2

(12) **United States Patent**
Perreault et al.

(10) **Patent No.: US 8,542,815 B2**
(45) **Date of Patent: Sep. 24, 2013**

(54) **PRODUCING ROUTING MESSAGES FOR VOICE OVER IP COMMUNICATIONS**

(75) Inventors: **Clay Perreault**, Panama City (PA); **Steve Nicholson**, Hamilton (NZ); **Rod Thomson**, North Vancouver (CA); **Johan Emil Viktor Bjorsell**, Vancouver (CA); **Fuad Arafa**, Vancouver (CA)

(73) Assignee: **Digifonica (International) Limited**, Vancouver (CA)

(*) Notice: Subject to any disclaimer, the term of this patent is extended or adjusted under 35 U.S.C. 154(b) by 853 days.

(21) Appl. No.: **12/513,147**

(22) PCT Filed: **Nov. 1, 2007**

(86) PCT No.: **PCT/CA2007/001956**

§ 371 (c)(1),
(2), (4) Date: **Mar. 1, 2010**

(87) PCT Pub. No.: **WO2008/052340**

PCT Pub. Date: **May 8, 2008**

(65) **Prior Publication Data**

US 2010/0150328 A1 Jun. 17, 2010

Related U.S. Application Data

(60) Provisional application No. 60/856,212, filed on Nov. 2, 2006.

(51) **Int. Cl.**
H04M 7/00 (2006.01)

(52) **U.S. Cl.**
USPC **379/221.02**; 379/142.04

(58) **Field of Classification Search**
USPC 379/142.04, 220.01–221.06
See application file for complete search history.

(56) **References Cited**

U.S. PATENT DOCUMENTS

4,916,491 A 4/1990 Katoh
4,992,971 A * 2/1991 Hayashi 717/140

(Continued)

FOREIGN PATENT DOCUMENTS

CA 2249668 4/1999
EP 1 389 862 A1 2/2004

(Continued)

OTHER PUBLICATIONS

Supplementary European Search Report for European Application No. 07816106 dated Jun. 18, 2012.

(Continued)

Primary Examiner — Simon Sing
(74) *Attorney, Agent, or Firm* — Knobbe Martens Olson & Bear LLP

(57) **ABSTRACT**

A process and apparatus to facilitate communication between callers and callees in a system comprising a plurality of nodes with which callers and callees are associated is disclosed. In response to initiation of a call by a calling subscriber, a caller identifier and a callee identifier are received. Call classification criteria associated with the caller identifier are used to classify the call as a public network call or a private network call. A routing message identifying an address, on the private network, associated with the callee is produced when the call is classified as a private network call and a routing message identifying a gateway to the public network is produced when the call is classified as a public network call.

111 Claims, 32 Drawing Sheets

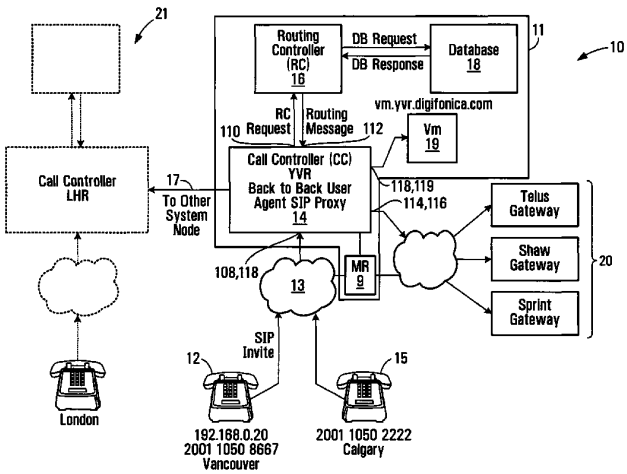

(56) **References Cited**

U.S. PATENT DOCUMENTS

5,146,491	A	9/1992	Silver et al.	
5,247,571	A	9/1993	Kay et al.	
5,303,297	A	4/1994	Hillis	
5,359,642	A	10/1994	Castro	
5,425,085	A	6/1995	Weinberger et al.	
5,440,621	A	8/1995	Castro	
5,454,030	A	9/1995	de Oliveira et al.	
5,469,497	A	11/1995	Pierce et al.	
5,506,893	A	4/1996	Buscher et al.	
5,519,769	A	5/1996	Weinberger et al.	
5,559,871	A	9/1996	Smith	
5,590,133	A	12/1996	Billstrom et al.	
5,608,786	A	3/1997	Gordon	
5,621,787	A	4/1997	McKoy et al.	
5,633,913	A *	5/1997	Talarmo	455/446
5,661,790	A	8/1997	Hsu	
5,712,907	A	1/1998	Wegner et al.	
5,724,355	A	3/1998	Bruno et al.	
5,726,984	A	3/1998	Kubler et al.	
5,737,414	A	4/1998	Walker et al.	
5,751,961	A	5/1998	Smyk	
5,793,762	A	8/1998	Penners et al.	
5,799,072	A	8/1998	Vulcan et al.	
5,802,502	A	9/1998	Gell et al.	
5,825,863	A	10/1998	Walker	
5,828,740	A	10/1998	Khuc et al.	
5,838,682	A	11/1998	Dekelbaum et al.	
5,845,267	A	12/1998	Ronen	
5,850,433	A	12/1998	Rondeau	
5,864,610	A	1/1999	Ronen	
5,867,495	A	2/1999	Elliott et al.	
5,883,891	A	3/1999	Williams et al.	
5,889,774	A	3/1999	Mirashrafi et al.	
5,905,736	A	5/1999	Ronen et al.	
5,907,547	A	5/1999	Foladare et al.	
5,910,946	A	6/1999	Csapo	
5,915,005	A	6/1999	He	
5,923,659	A	7/1999	Curry et al.	
5,930,343	A	7/1999	Vasquez	
5,937,045	A	8/1999	Yaoya et al.	
5,940,598	A	8/1999	Strauss et al.	
5,953,504	A	9/1999	Sokal et al.	
5,956,391	A	9/1999	Melen et al.	
5,970,477	A	10/1999	Roden	
5,974,043	A	10/1999	Solomon	
5,991,291	A	11/1999	Asai et al.	
6,005,926	A	12/1999	Mashinsky	
6,014,379	A	1/2000	White et al.	
6,021,126	A	2/2000	White et al.	
6,052,445	A	4/2000	Bashoura et al.	
6,058,300	A	5/2000	Hanson	
6,069,890	A	5/2000	White et al.	
6,073,013	A	6/2000	Agre et al.	
6,078,647	A *	6/2000	D'Eletto	379/32.01
6,104,704	A	8/2000	Buhler et al.	
6,104,711	A	8/2000	Voit	
6,115,737	A	9/2000	Ely et al.	
6,128,304	A	10/2000	Gardell et al.	
6,137,869	A	10/2000	Voit et al.	
6,141,404	A	10/2000	Westerlage et al.	
6,151,385	A	11/2000	Reich et al.	
6,188,752	B1	2/2001	Lesley	
6,282,574	B1	8/2001	Voit	
6,298,062	B1	10/2001	Gardell et al.	
6,351,464	B1	2/2002	Galvin et al.	
6,359,880	B1	3/2002	Curry et al.	
6,430,275	B1	8/2002	Voit et al.	
6,507,644	B1	1/2003	Henderson et al.	
6,597,686	B1	7/2003	Smyk	
6,674,745	B1	1/2004	Schuster et al.	
6,724,860	B2	4/2004	Stumer et al.	
6,744,858	B1	6/2004	Ryan et al.	
6,766,159	B2	7/2004	Lindholm	
6,798,767	B1 *	9/2004	Alexander et al.	370/352
6,819,929	B2	11/2004	Antonucci et al.	
6,954,453	B1	10/2005	Schindler	
6,963,557	B2	11/2005	Knox	
7,046,658	B1	5/2006	Kundaje	
7,055,174	B1	5/2006	Cope et al.	
7,068,772	B1	6/2006	Widger et al.	
7,079,526	B1	7/2006	Wipliez et al.	
7,120,682	B1	10/2006	Salama	
7,212,522	B1	5/2007	Shankar et al.	
7,454,510	B2	11/2008	Kleyman et al.	
7,950,046	B2	5/2011	Kropivny	
8,116,307	B1	2/2012	Thesayi et al.	
2002/0051518	A1	5/2002	Bondy et al.	
2002/0116464	A1	8/2002	Mak	
2002/0122391	A1	9/2002	Shalit	
2003/0200311	A1	10/2003	Baum	
2003/0219103	A1	11/2003	Rao et al.	
2004/0022237	A1	2/2004	Elliot et al.	
2004/0157629	A1	8/2004	Kallio et al.	
2004/0165709	A1	8/2004	Pence et al.	
2004/0181599	A1	9/2004	Kreusch et al.	
2004/0202295	A1	10/2004	Shen et al.	
2004/0240439	A1	12/2004	Castleberry et al.	
2004/0255126	A1	12/2004	Reith	
2005/0025043	A1	2/2005	Mussman et al.	
2005/0083911	A1	4/2005	Grabelsky et al.	
2005/0094651	A1	5/2005	Lutz et al.	
2005/0169248	A1	8/2005	Truesdale et al.	
2005/0174937	A1	8/2005	Scoggins et al.	
2005/0177843	A1	8/2005	Williams	
2006/0072547	A1	4/2006	Florkey et al.	
2006/0072550	A1	4/2006	Davis et al.	
2006/0093135	A1	5/2006	Fiatal et al.	
2006/0111116	A1	5/2006	Palmer et al.	
2006/0153342	A1	7/2006	Sasaki	
2006/0160565	A1	7/2006	Singh et al.	
2006/0177035	A1	8/2006	Cope et al.	
2006/0209768	A1	9/2006	Yan et al.	
2006/0258328	A1	11/2006	Godoy	
2006/0264200	A1	11/2006	Laiho et al.	
2007/0036143	A1	2/2007	Alt et al.	
2007/0112964	A1	5/2007	Guedalia et al.	
2007/0127676	A1 *	6/2007	Khadri	379/211.02
2007/0253418	A1	11/2007	Shiri et al.	
2008/0037715	A1	2/2008	Prozeniuk et al.	
2008/0056235	A1	3/2008	Albina et al.	
2008/0063153	A1	3/2008	Krivorot et al.	
2009/0028146	A1	1/2009	Kleyman et al.	
2009/0292539	A1	11/2009	Jaroker	
2009/0325558	A1	12/2009	Pridmore et al.	
2010/0086119	A1	4/2010	De Luca et al.	

FOREIGN PATENT DOCUMENTS

EP	1 389 862	B1	11/2004
WO	WO 01/89145	A2	11/2001
WO	WO 2007/044454	A2	4/2007
WO	WO 2008/052340	A1	5/2008
WO	WO 2008/064481	A1	6/2008
WO	WO 2008/116296	A1	10/2008

OTHER PUBLICATIONS

F. Baker et al. "RFC 3924—Cisco Architecture for Lawful Intercept in IP Networks." Oct. 2004.

Cisco. "Lawful Intercept Requirements Summary." http://www.faqs.org/rfcs/rfc3924.html. Nov. 8, 2006.

Sippy SIP B2BUA. "About Sippy RTPproxy." http://www.rtpproxy.org. Jul. 15, 2009.

ETSI Technical Specification. "Lawful Interception (LI); Handover Interface and Service-Specific Details (SSD) for IP delivery; Part 5: Service-specific details for IP Multimedia Services." Apr. 2008, 25 pgs, v.2.3.1, France.

M. Handley et al. "RFC 2543—SIP: Session Initiation Protocol." Mar. 1999.

The International Search Report and Written Opinion of the International Searching Authority completed Jun. 6, 2008 for related PCT/CA2008/000545.

The International Search Report and Written Opinion of the International Searching Authority completed Feb. 6, 2008 for corresponding PCT/CA2007/001956.

META 1016
META V. VOIP-PAL

The International Preliminary Report on Patentability mailed May 14, 2009 for corresponding PCT/CA2007/001956.
The International Search Report and Written Opinion of the International Searching Authority completed Mar. 3, 2008 for related PCT/CA2007/002150.
The International Preliminary Report on Patentability mailed Feb. 13, 2009 for related PCT/CA2007/002150.
The International Preliminary Report on Patentability and Written Opinion of the International Searching Authority mailed Feb. 10, 2011 for related PCT Application No. PCT/CA2009/001062, Feb. 10, 2011.
The International Preliminary Report on Patentability mailed Feb. 13, 2009 for corresponding PCT/CA2007/002150.
The International Preliminary Report on Patentability mailed May 14, 2009 for related PCT/CA2007/001956.
The International Search Report and Written Opinion mailed on Mar. 12, 2010 for corresponding PCT Application No. PCT/CA2009/001062.
The International Search Report and Written Opinion of the International Searching Authority completed Feb. 6, 2008 for related PCT/CA2007/001956.
The International Search Report and Written Opinion of the International Searching Authority completed Jun. 6, 2008 for corresponding PCT/CA2008/000545.
The International Search Report completed on Mar. 3, 2008 for corresponding PCT/CA2007/002150.
The Written Opinion and International Search Report completed on Jun. 17, 2010 for related PCT Application No. PCT/CA2009/001317, Jun. 17, 2010.
The International Preliminary Report on Patentability issued on Sep. 29, 2009 for PCT/CA2008/000545.
The International Preliminary Report on Patentability issued on Mar. 20, 2012 for PCT/CA2009/001317.
Townsley, et al.; "RFC 2661—Layer Two Tunneling Protocol 'L2TP'", Aug. 1999.
IP2Location, http://www.ip2location.com/; printed Jun. 20, 2012.
DOTS IP Address Validation, "Overview", http://www.serviceobjects.com/products/dots_ipgeo.asp; printed Jun. 21, 2012.
List of North American Numbering Plan area codes, http://en.wikipedia.org/wiki/List_of_NANP_area_codes; printed Jun. 20, 2012.
DOTS Phone Exchange, "Overview", http://www.serviceobjects.com/demos/PhoneExchangeDemo.asp (URL no longer valid, current URL is http://www.serviceobjects.com/products/phone/phone-exchange); printed Jun. 21, 2012.
Rosenberg, et al.; "RFC 3261—SIP: Session Initiation Protocol", Jun. 2002.
Lind AT&T S: "ENUM Call Flows for VoIP Interworking; draft-lind-enum-callflows-03.txt", Feb. 1, 2002, No. 3, pp. 1-17.
IETF ENUM WG R Stastny OEFEG Informational Numbering for VoIP and Other IP Communications: "Numbering for VoIP and other IP Communications, draft-stastny-enum-numbering-voip-00.txt", Oct. 1, 2003, pp. 1-43.
EPO, Supplementary European Search Report, dated Nov. 2, 2012, Application No. 07855436.7, corresponds to U.S. Appl. No. 12/517,026.

* cited by examiner

META 1016
META V. VOIP-PAL

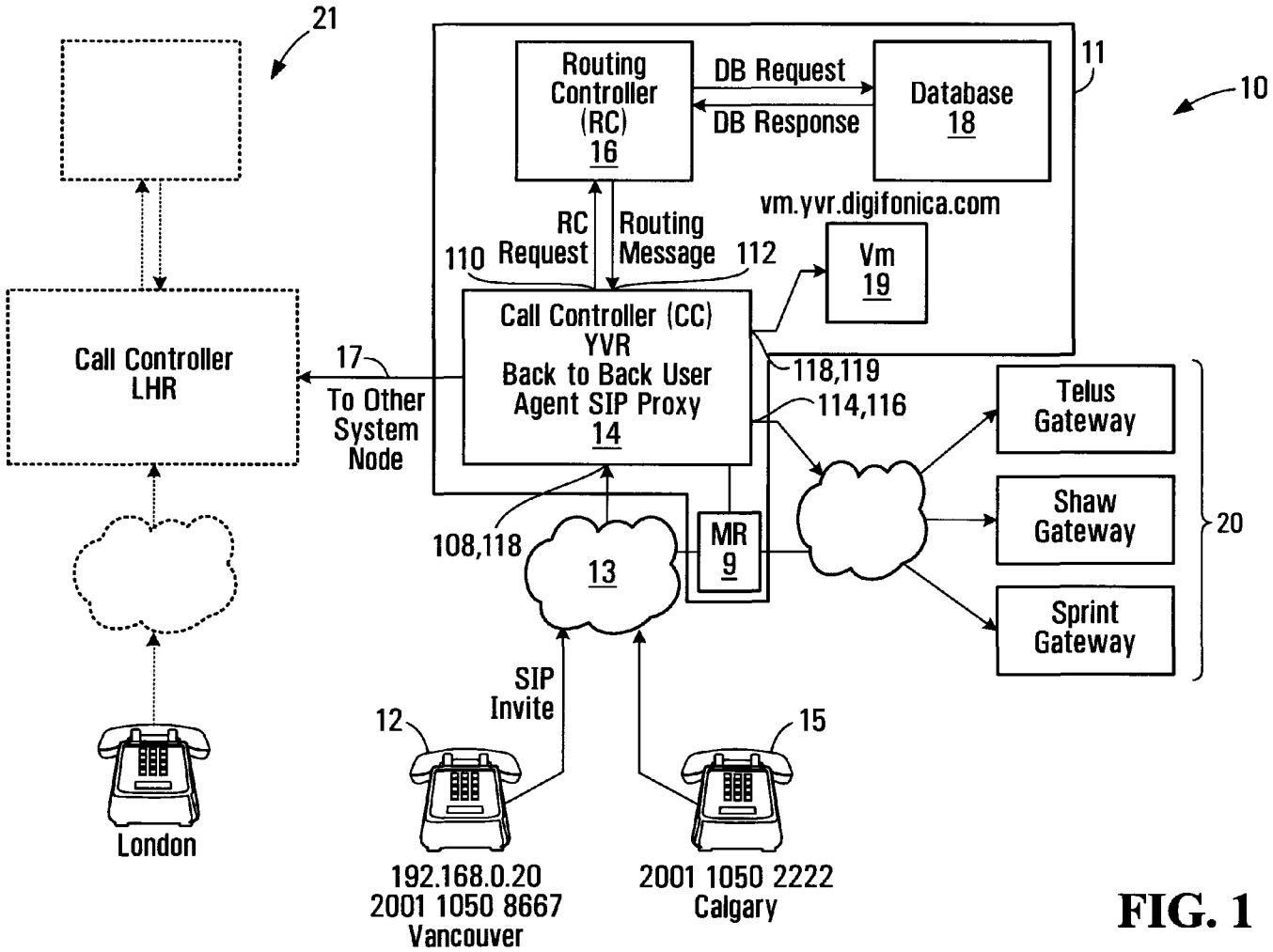

FIG. 1

META 1016
META V. VOIP-PAL

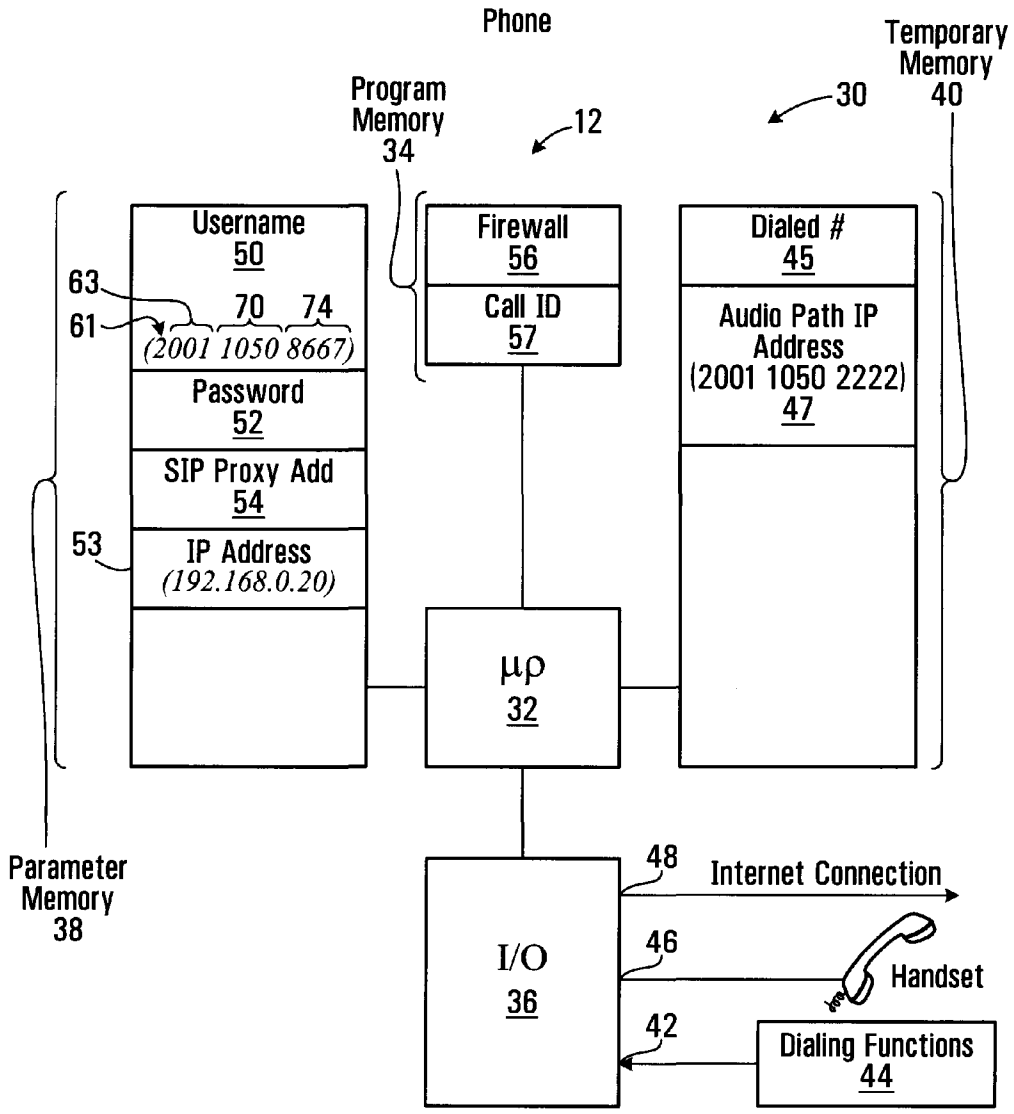

FIG. 2

META 1016
META V. VOIP-PAL

SIP Invite Message

60	Caller	2001 1050 8667
62	Callee	2001 1050 2222
64	Digest Parameters	XXXXXXX
65	Call ID	FF10@ 192.168.0.20
67	IP Address	192.168.0.20
69	Caller UDP Port	1

FIG. 3

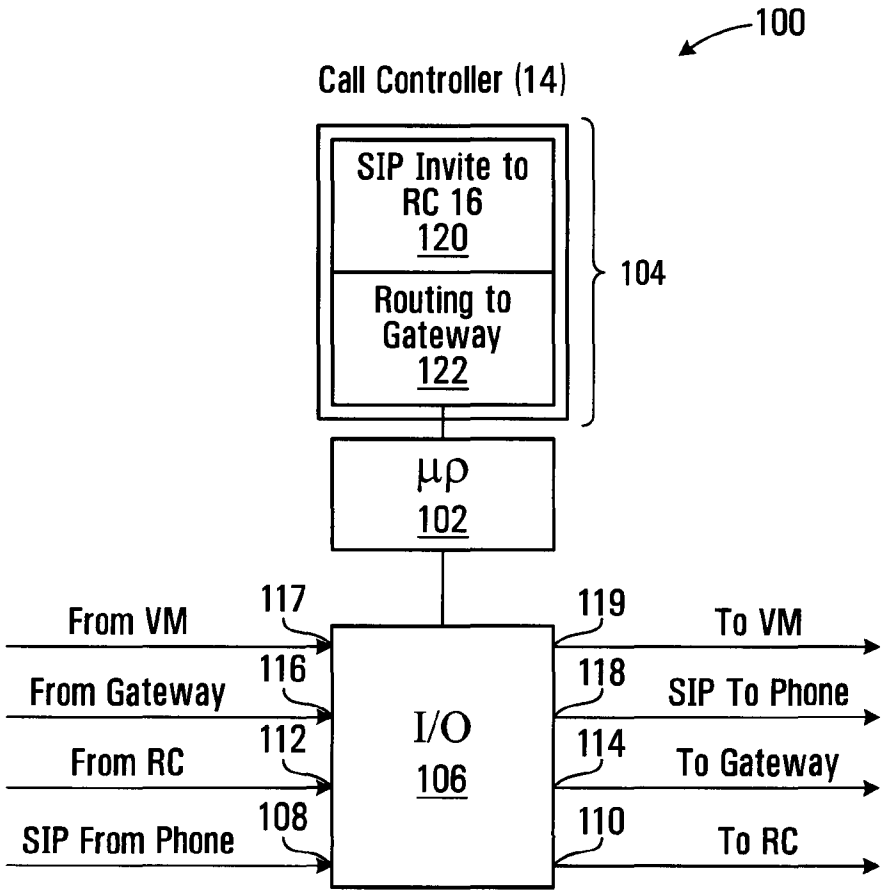

FIG. 4

META 1016
META V. VOIP-PAL

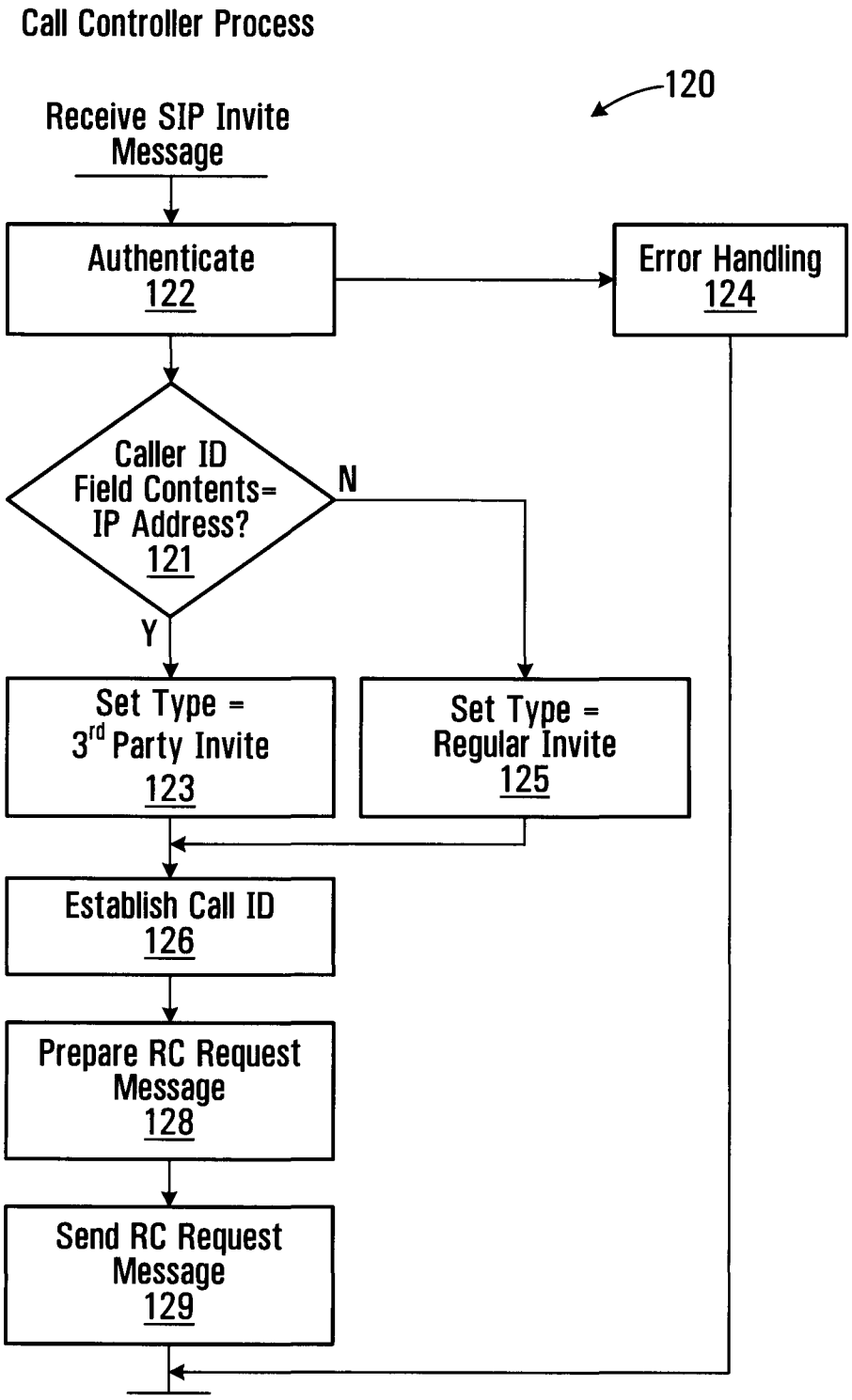

FIG. 5

META 1016
META V. VOIP-PAL

150

RC Request Message

152	Caller	2001 1050 8667
154	Callee	2001 1050 2222
156	Digest	XXXXXXX
158	Call ID	FF10@ 192.168.0.20
160	Type	Subscriber

FIG. 6

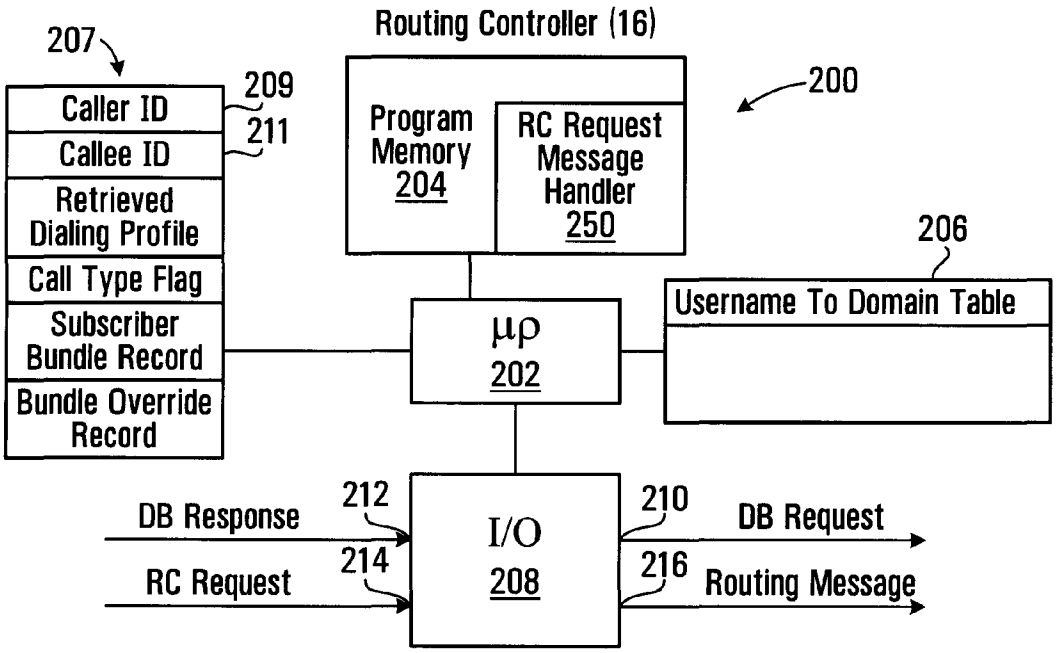

FIG. 7

META 1016
META V. VOIP-PAL

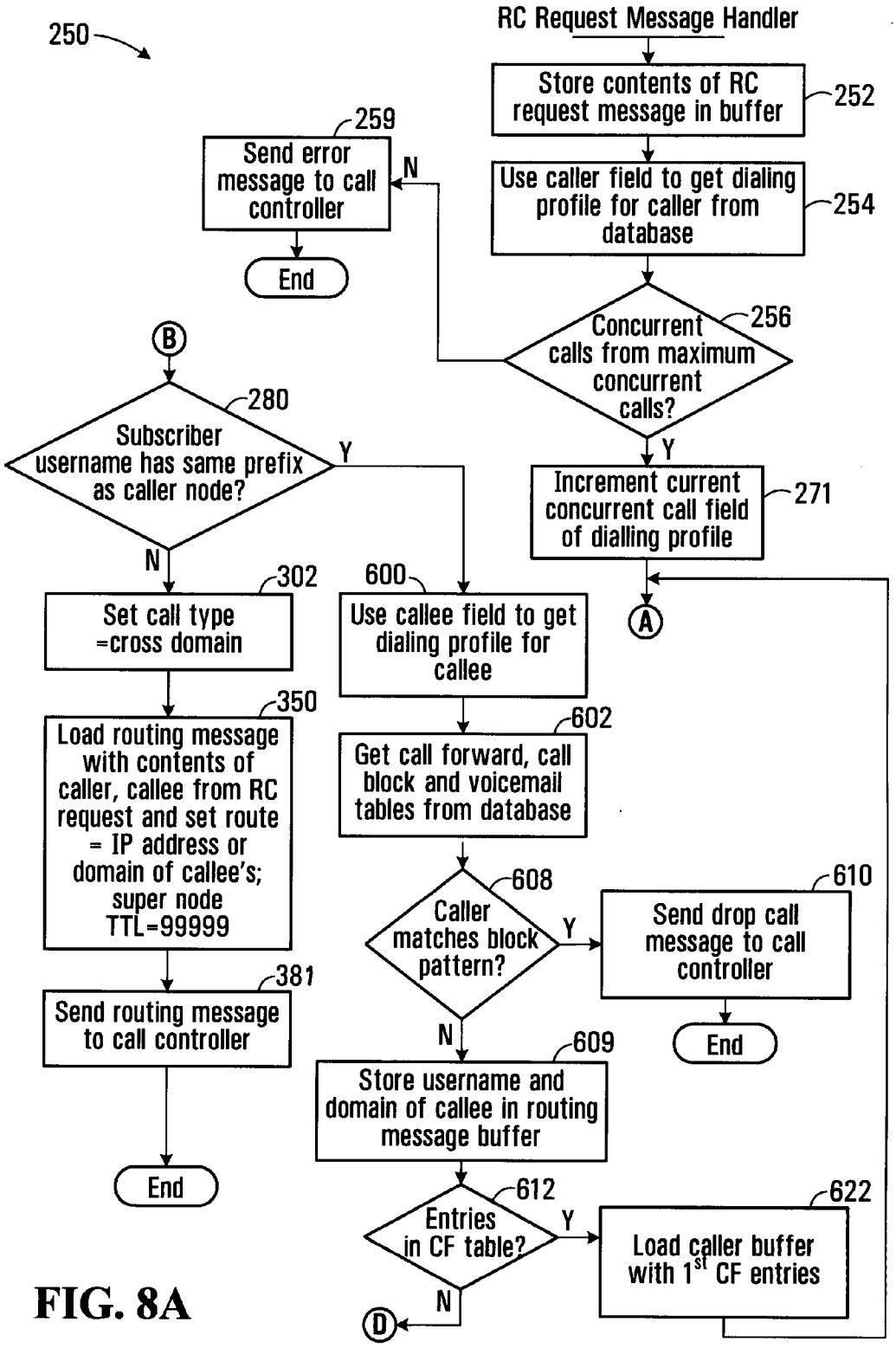

FIG. 8A

META 1016
META V. VOIP-PAL

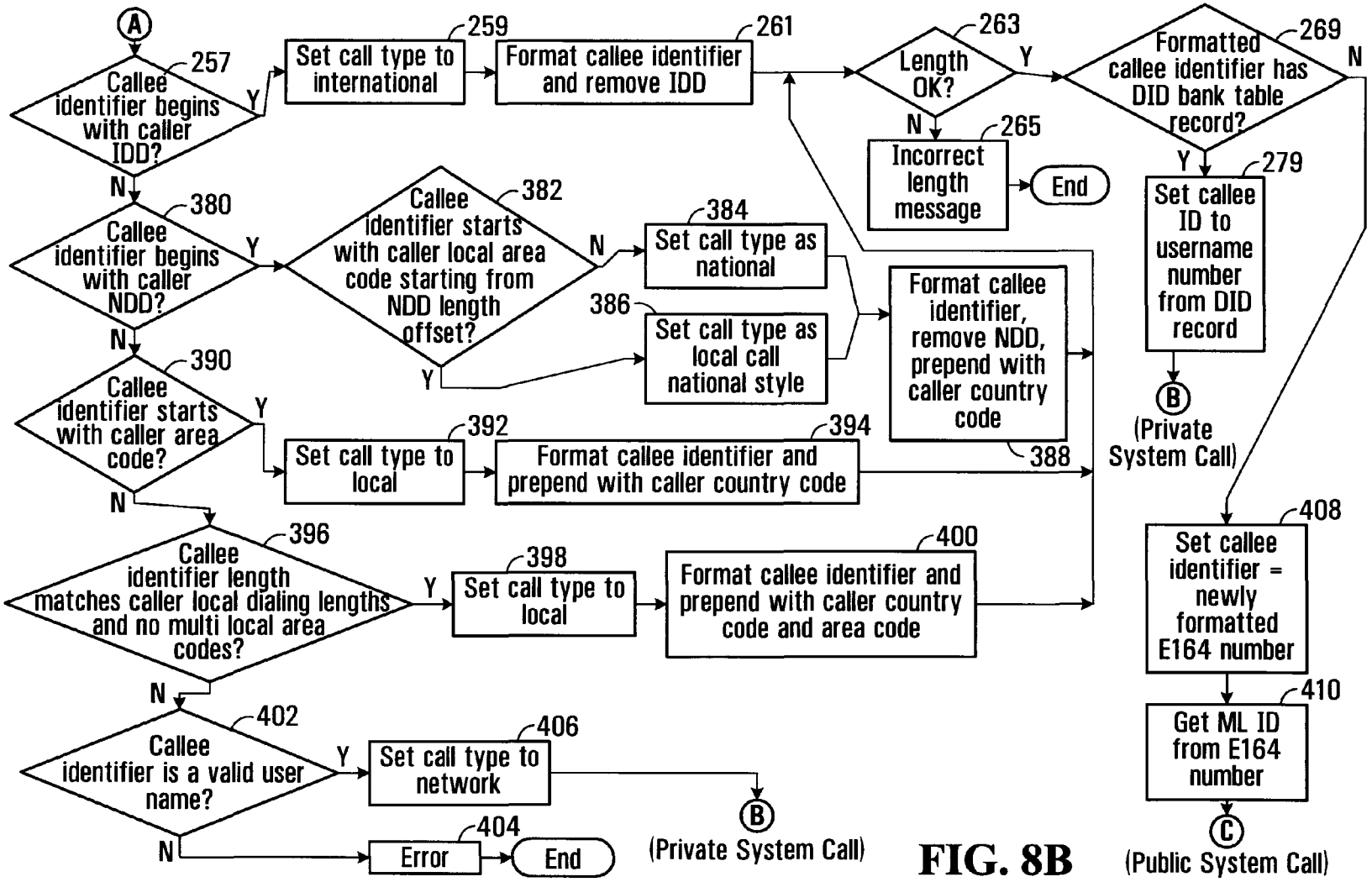

FIG. 8B

META 1016
META V. VOIP-PAL

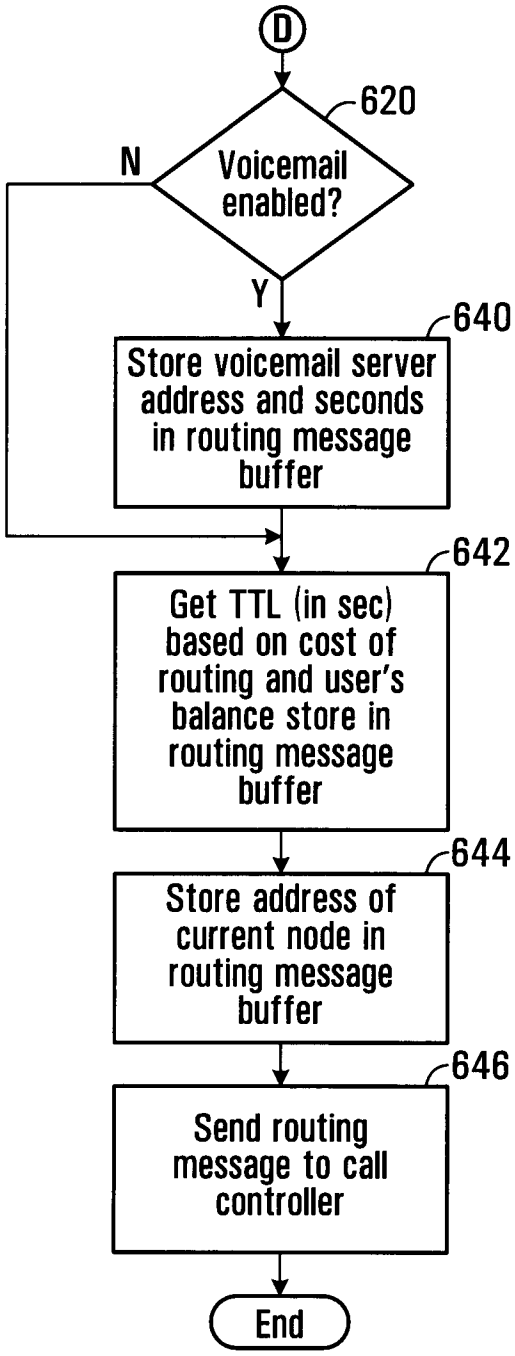

FIG. 8C

META 1016
META V. VOIP-PAL

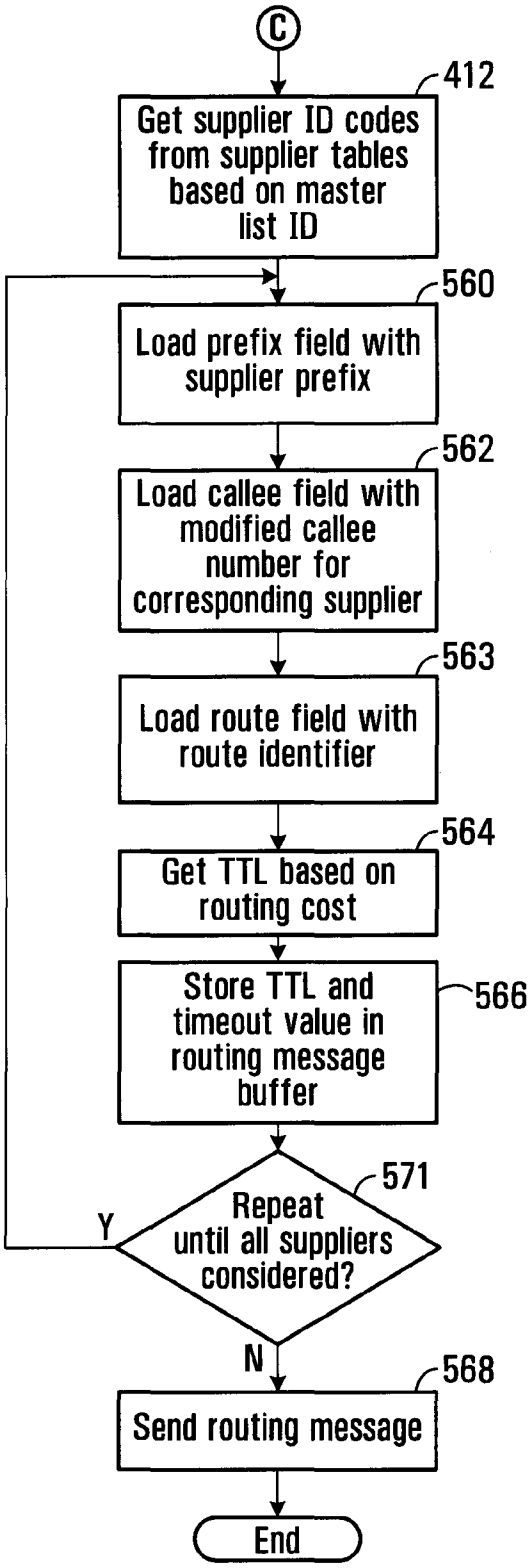

FIG. 8D

META 1016
META V. VOIP-PAL

253

Dialing Profile for a User

258 Username	Assigned on Subscription
260 Domain	Domain Associated with User
262 NDD	1
264 IDD	011
266 Country Code	1
267 Local Area Codes	604;778
268 Caller Minimum Local Length	10
270 Caller Maximum Local Length	10
273 Reseller	Retailer
275 Maximum # of concurrent calls	Assigned on Subscription
277 Current # of concurrent calls	Assigned on Subscription

FIG. 9

Dialing Profile for Caller (Vancouver Subscriber)

276

258 Username	2001 1050 8667 (61, 284; 63, 70, 74)
260 Domain	sp.yvr.digifonica.com (282; 286, 288, 290)
262 NDD	1
264 IDD	011
266 Country Code	1
267 Local Area Codes	604;778 (Vancouver)
268 Caller Minimum Local Length	10
270 Caller Maximum Local Length	10
273 Reseller	Klondike
275 Maximum # of concurrent calls	5
277 Current # of concurrent calls	0

FIG. 10

META 1016
META V. VOIP-PAL

Callee Profile for Calgary Subscriber	
Username	2001 1050 2222
Domain	sp.yvr.digifonica.com
NDD	1
IDD	011
Country Code	1
Local Area Codes	403 (Calgary)
Caller Minimum Local Length	7
Caller Maximum Local Length	10
Reseller	Deerfoot
Maximum # of concurrent calls	5
Current # of concurrent calls	0

FIG. 11

Callee Profile for London Subscriber	
Username	4401 1062 4444
Domain	sp.lhr.digifonica.com
NDD	0
IDD	00
Country Code	44
Local Area Codes	20 (London)
Caller Minimum Local Length	10
Caller Maximum Local Length	11
Reseller	Marble Arch
Maximum # of concurrent calls	5
Current # of concurrent calls	0

FIG. 12

META 1016
META V. VOIP-PAL

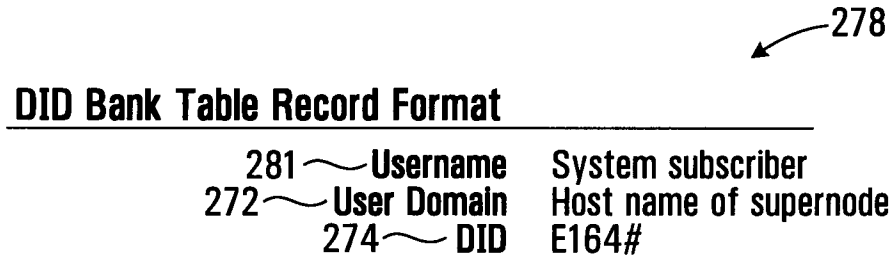

FIG. 13

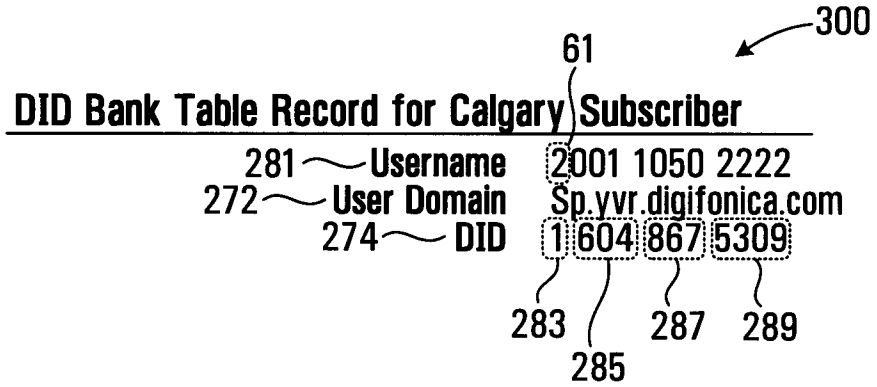

FIG. 14

META 1016
META V. VOIP-PAL

352

Routing Message Format

354	Supplier Prefix (optional)	Code identifying supplier traffic
356	Delimiter (optional)	Symbol separating fields
358	Callee	PSTN compatible number or Digifonica number
360	Route	Domain name or IP address
362	Time to Live(TTL)	In seconds
364	Other	TBD

FIG. 15

366

Example of Routing Message - Different Node

440110624444@sp.lhr.digifonica.com;ttl=9999

359 361 363

FIG. 16

370

Prefix to Supernode Table Record Format

372	Prefix	First n digits of callee identifier
374	Supernode Address	IP address or fully qualified domain name

FIG. 17

Prefix to Supernode Table Record for Calgary Subscriber

Prefix	20
Supernode Address	sp.yvr.digifonica.com

FIG. 18

META 1016
META V. VOIP-PAL

Master List Record Format

500	ml_id	Alphanumeric
502	Dialing code	Number Sequence
504	Country code	The country code is the national prefix to be used when dialing TO a particular country FROM another country.
506	Nat Sign #(Area Code)	Number Sequence
508	Min Length	Numeric
510	Max Length	Numeric
512	NDD	The NDD prefix is the access code used to make a call **WITHIN** that country from one city to another (when calling another city in the same vicinity, this may not be necessary).
514	IDD	The **IDD prefix** is the international prefix needed to dial a call **FROM** the country listed **TO** another country.
516	Buffer rate	Safe change rate above the highest rate charged by suppliers

FIG. 19

Example: Master List Record with Populated Fields

ml_id	1019
Dialing code	1604
Country code	1
Nat Sign #(Area Code)	604
Min Length	7
Max Length	7
NDD	1
IDD	011
Buffer rate	$0.009/min

FIG. 20

META 1016
META V. VOIP-PAL

Suppliers List Record Format

540	Sup_id	Name code
542	MI_id	Numeric code
544	Prefix (optional)	String identifying supplier's traffic #
546	Specific Route	IP address
548	NDD/IDD rewrite	
550	Rate	Cost per second to Digifonica to use this route
551	Timeout	Maximum time to wait for a response when requesting this gateway

FIG. 21

Telus Supplier Record

Sup_id	2010 (Telus)
MI_id	1019
Prefix (optional)	4973#
Specific Route	72.64.39.58
NDD/IDD rewrite	011
Rate	$0.02/min
Timeout	20

FIG. 22

Shaw Supplier Record

Sup_id	2011 (Shaw)
MI_id	1019
Prefix (optional)	4974#
Specific Route	73.65.40.59
NDD/IDD rewrite	011
Rate	$0.025/min
Timeout	30

FIG. 23

Sprint Supplier Record

Sup_id	2012 (Sprint)
MI_id	1019
Prefix (optional)	4975#
Specific Route	74.66.41.60
NDD/IDD rewrite	011
Rate	$0.03/min
Timeout	40

FIG. 24

META 1016
META V. VOIP-PAL

Routing Message Buffer for Gateway Call

4973#0116048675309@72.64.39.58;ttl=3600;to=20 570
4974#0116048675309@73.65.40.59;ttl=3600;to=30 572
4975#0116048675309@74.66.41.60;ttl=3600;to=40 574

FIG. 25

Call Block Table Record Format

604	Username	Digifonica #
606	Block Pattern	PSTN compatible or Digifonica #

FIG. 26

Call Block Table Record for Calgary Callee

604	Username of Callee	2001 1050 2222
606	Block Pattern	2001 1050 8664

FIG. 27

Call Forwarding Table Record Format for Callee

614	Username of Callee	Digifonica #
616	Destination Number	Digifonica #
618	Sequence Number	Integer indicating order to try this

FIG. 28

Call Forwarding Table Record for Calgary Callee

614	Username of Callee	2001 1050 2222
616	Destination Number	2001 1055 2223
618	Sequence Number	1

FIG. 29

META 1016
META V. VOIP-PAL

Voicemail Table Record Format

624	Username of Callee	Digifonica #
626	Vm Server	domain name
628	Seconds to Voicemail	time to wait before engaging voicemail
630	Enabled	yes/no

FIG. 30

Voicemail Table Record for Calgary Callee

Username of Callee	2001 1050 2222
Vm Server	vm.yvr.digifonica.com
Seconds to Voicemail	20
Enabled	1

FIG. 31

Routing Message Buffer - Same Node

650 200110502222@sp.yvr.digifonica.com;ttl=3600
652 200110552223@sp.yvr.digifonica.com;ttl=3600
654 vm.yvr.digifonica.com;20;ttl=60
656 sp.yvr.digifonica.com

FIG. 32

META 1016
META V. VOIP-PAL

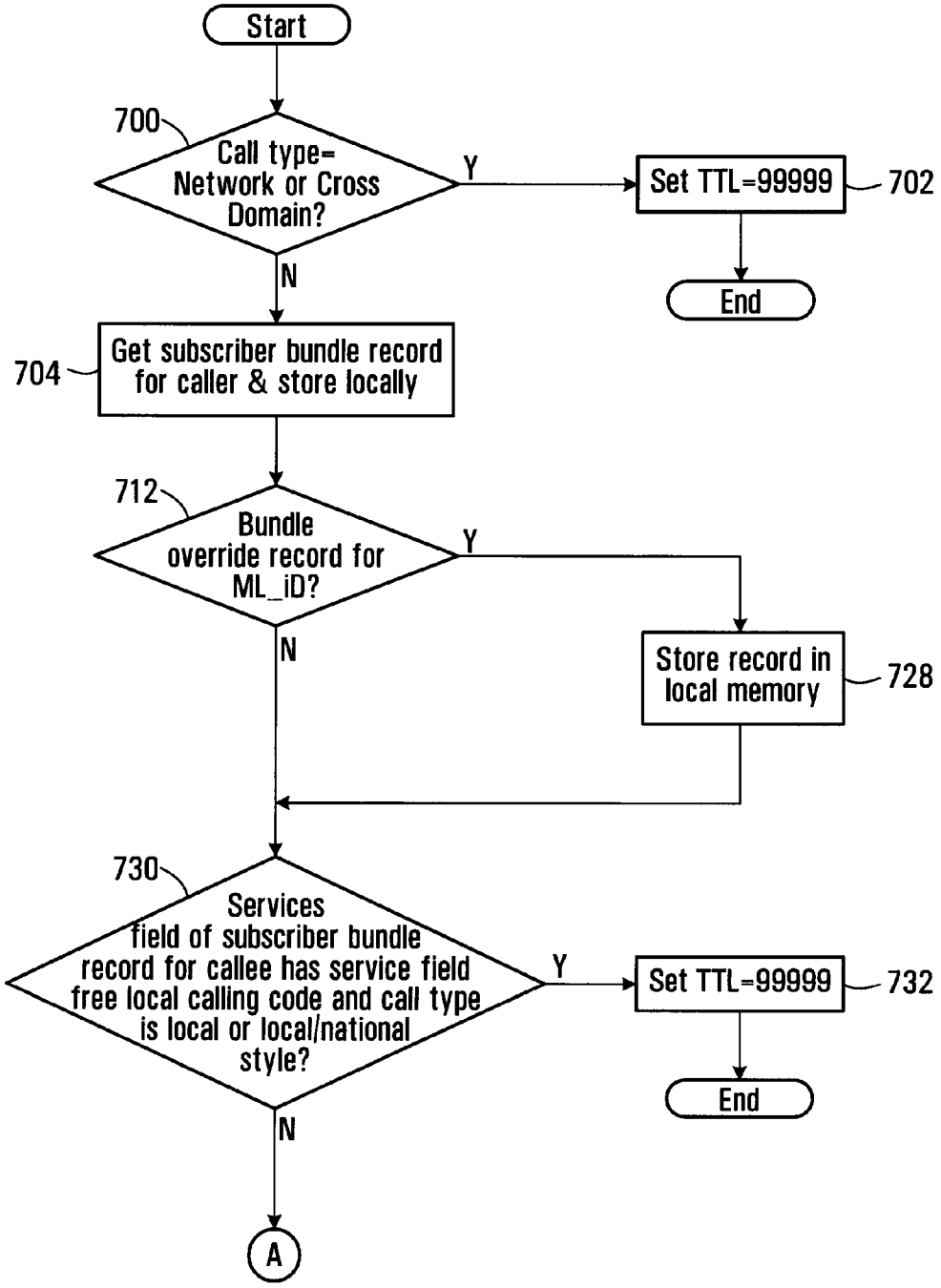

FIG. 33A

META 1016
META V. VOIP-PAL

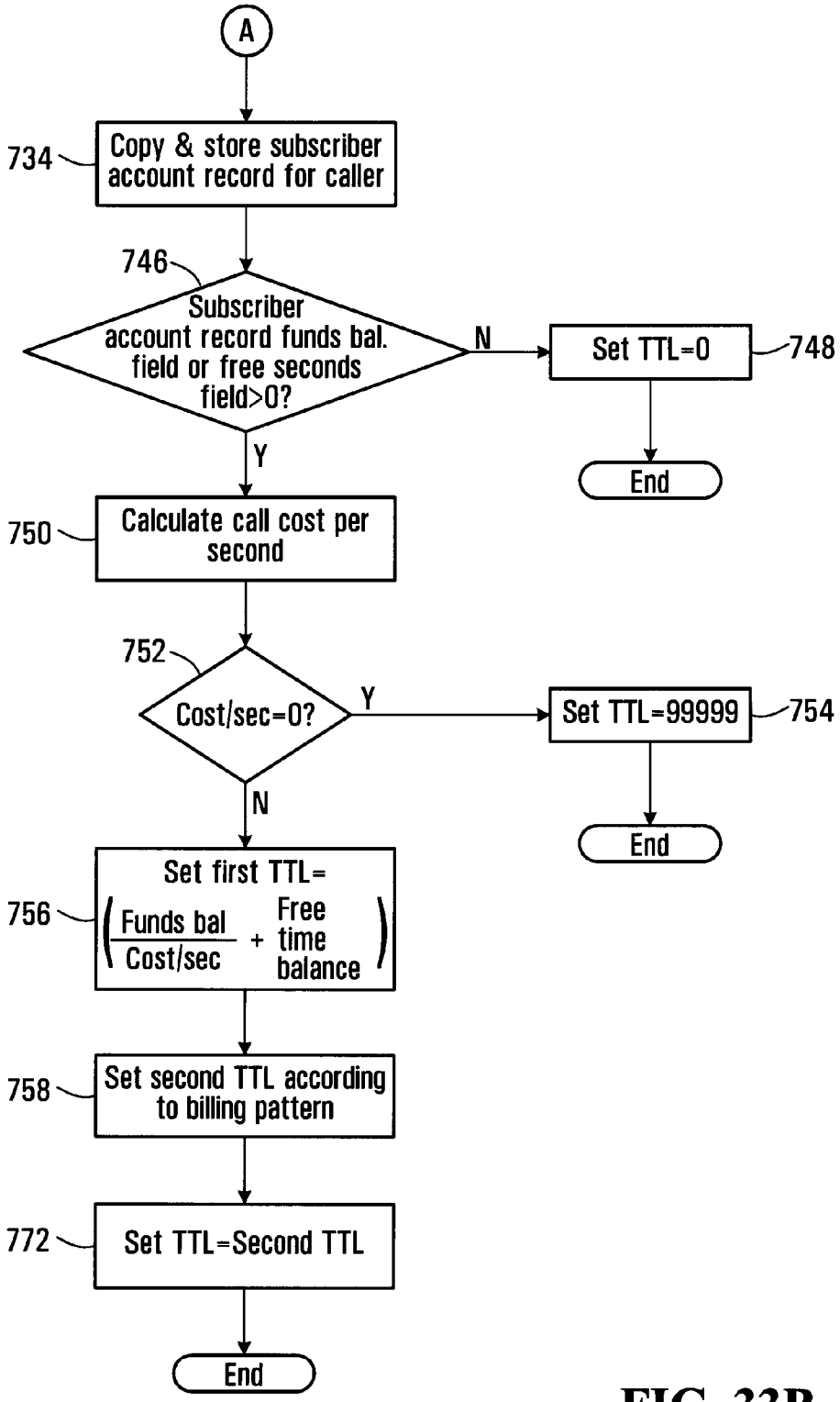

FIG. 33B

META 1016
META V. VOIP-PAL

706

Subscriber Bundle Table Record

708	Username	Subscriber username
710	Services	Codes identifying service features (e.g. Free local calling; call blocking, voicemail)

FIG. 34

Subscriber Bundle Record for Vancouver Caller

708	Username	2001 1050 8667
710	Services	10; 14; 16

FIG. 35

714

Bundle Override Table Record

716	ML_Id	Master list ID code
718	Override type	Fixed; percent; cents
720	Override value	real number representing value of override type
722	Inc1	first level of charging (minimum # of seconds) charge
724	Inc2	second level of charging

FIG. 36

726

Bundle Override Record for Located ML_iD

716	ML_Id	1019
718	Override type	percent
720	Override value	10.0
722	Inc1	30 seconds
724	Inc2	6 seconds

FIG. 37

META 1016
META V. VOIP-PAL

736

Subscriber Account Table Record

738	Username	Subscriber username
740	Funds balance	real number representing $ value of credit
742	Free time balance	integer representing # of free seconds

FIG. 38

744

Subscriber Account Record for Vancouver Caller

738	Username	2001 1050 8667
740	Funds balance	$10.00
742	Free time balance	100

FIG. 39

META 1016
META V. VOIP-PAL

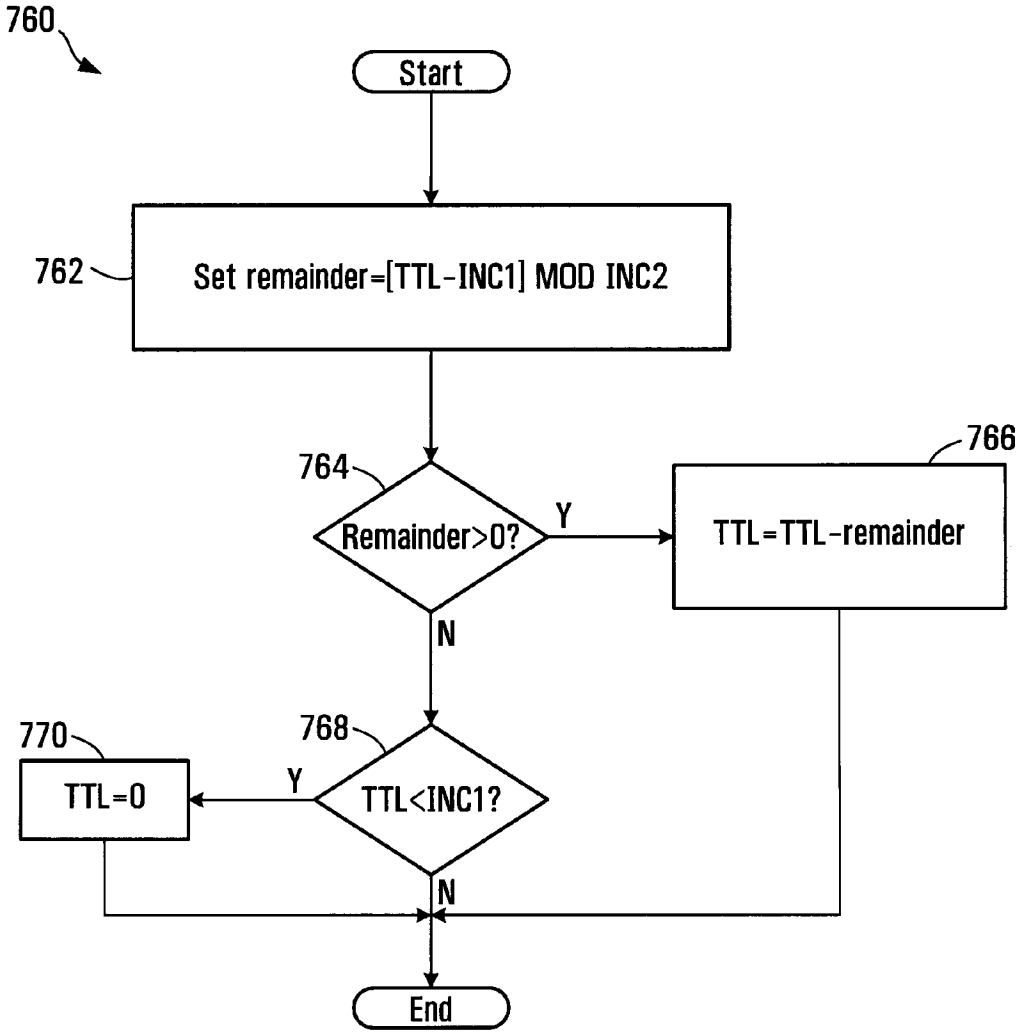

FIG. 40

META 1016
META V. VOIP-PAL

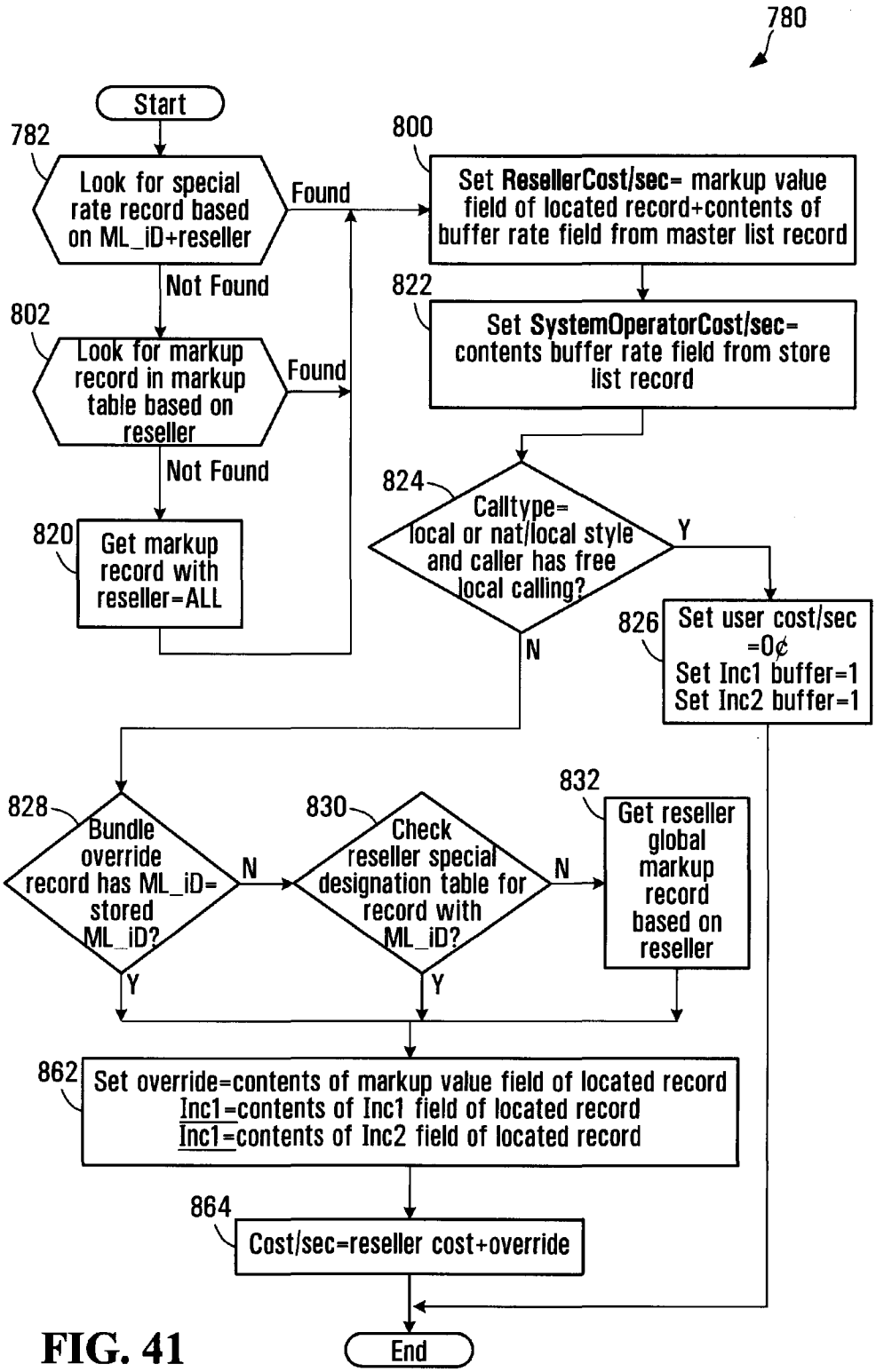

FIG. 41

META 1016
META V. VOIP-PAL

784

System Operator Special Rates Table Record

786	Reseller	retailer id
788	ML_Id	master list id
790	Markup Table	fixed; percent; cents
792	Markup Value	real number representing value of markup type
794	Inc1	first level of charging (minimum # of seconds) charge
796	Inc2	second level of charging

FIG. 42

798

System Operator Special Rates Table Record for Klondike

786	Reseller	Klondike
788	ML_Id	1019
790	Markup Table	cents
792	Markup Value	$0.001
794	Inc1	30
796	Inc2	6

FIG. 43

META 1016
META V. VOIP-PAL

804

System Operator Markup Table Record

806	Reseller	reseller id code
808	Markup Table	fixed; percent; cents
810	Markup Value	real number representing value of markup type
812	Inc1	first level of charging (minimum # of seconds) charge
814	Inc2	second level of charging

FIG. 44

System Operator Markup Table Record for the Reseller Klondike

806	Reseller	Klondike
808	Markup Table	cents
810	Markup Value	$0.01
812	Inc1	30
814	Inc2	6

FIG. 45

System Operator Markup Table Record

806	Reseller	all
808	Markup Table	percent
810	Markup Value	1.0
812	Inc1	30
814	Inc2	6

FIG. 46

META 1016
META V. VOIP-PAL

832

Reseller Special Destinations Table Record

834	Reseller	reseller id code
836	ML_id	Master List ID code
838	Markup Table	fixed; percent; cents
840	Markup Value	real number representing value of markup type
842	Inc1	first level of charging (minimum # of seconds) charge
844	Inc2	second level of charging

FIG. 47

846

Reseller Special Destinations Table Record for the Reseller Klondike

834	Reseller	Klondike
836	ML_id	1019
838	Markup Table	percent
840	Markup Value	5%
842	Inc1	30
844	Inc2	6

FIG. 48

848

Reseller Global Markup Table Record

850	Reseller	reseller id code
852	Markup Table	fixed; percent; cents
854	Markup Value	real number representing value of markup type
856	Inc1	first level of charging (minimum # of seconds) charge
858	Inc2	second level of charging

FIG. 49

860

Reseller Global Markup Table Record for the Reseller Klondike

850	Reseller	Klondike
852	Markup Table	percent
854	Markup Value	10%
856	Inc1	30
858	Inc2	6

FIG. 50

META 1016
META V. VOIP-PAL

900

SIP Bye Message

902	Caller	Username
904	Callee	PSTN compatible # or Username
906	Call ID	unique call identifier (hexadecimal string@IP))

FIG. 51

908

SIP Bye Message

902	Caller	2001 1050 8667
904	Callee	2001 1050 2222
906	Call ID	FA10@192.168.0.20

FIG. 52

META 1016
META V. VOIP-PAL

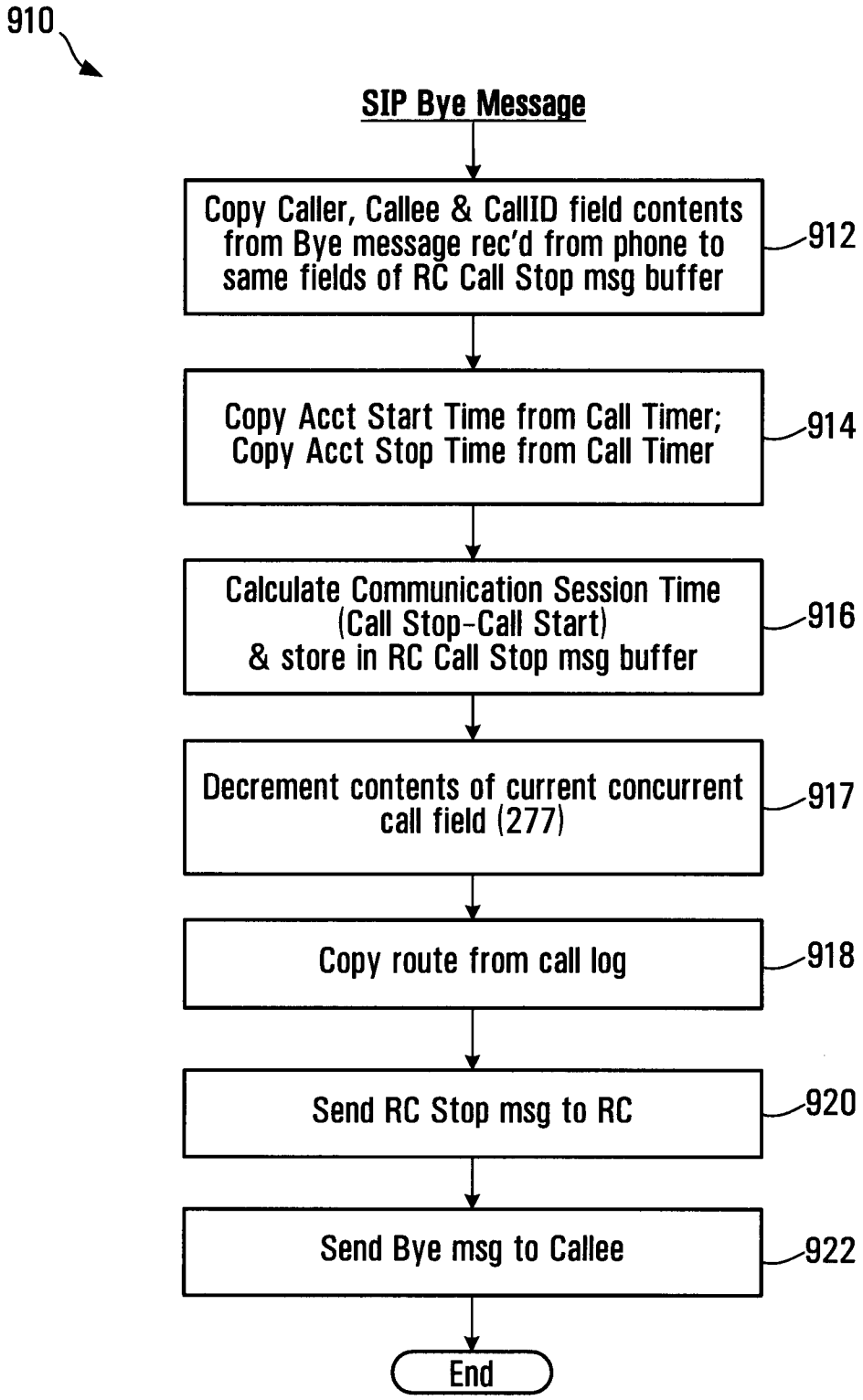

FIG. 53

META 1016
META V. VOIP-PAL

1000

RC Call Stop Message

1002	Caller	Username
1004	Callee	PSTN compatible # or Username
1006	Call ID	unique call identifier (hexadecimal string@IP)
1008	Acct Start Time	start time of call
1010	Acct Stop Time	time the call ended
1012	Acct Session Time	start time-stop time (in seconds)
1014	Route	IP address for the communications link that was established

FIG. 54

1020

RC Call Stop Message for Calgary Callee

1002	Caller	2001 1050 8667
1004	Callee	2001 1050 2222
1006	Call ID	FA10@192.168.0.20
1008	Acct Start Time	2006-12-30 12:12:12
1010	Acct Stop Time	2006-12-30 12:12:14
1012	Acct Session Time	2
1014	Route	72.64.39.58

FIG. 55

META 1016
META V. VOIP-PAL

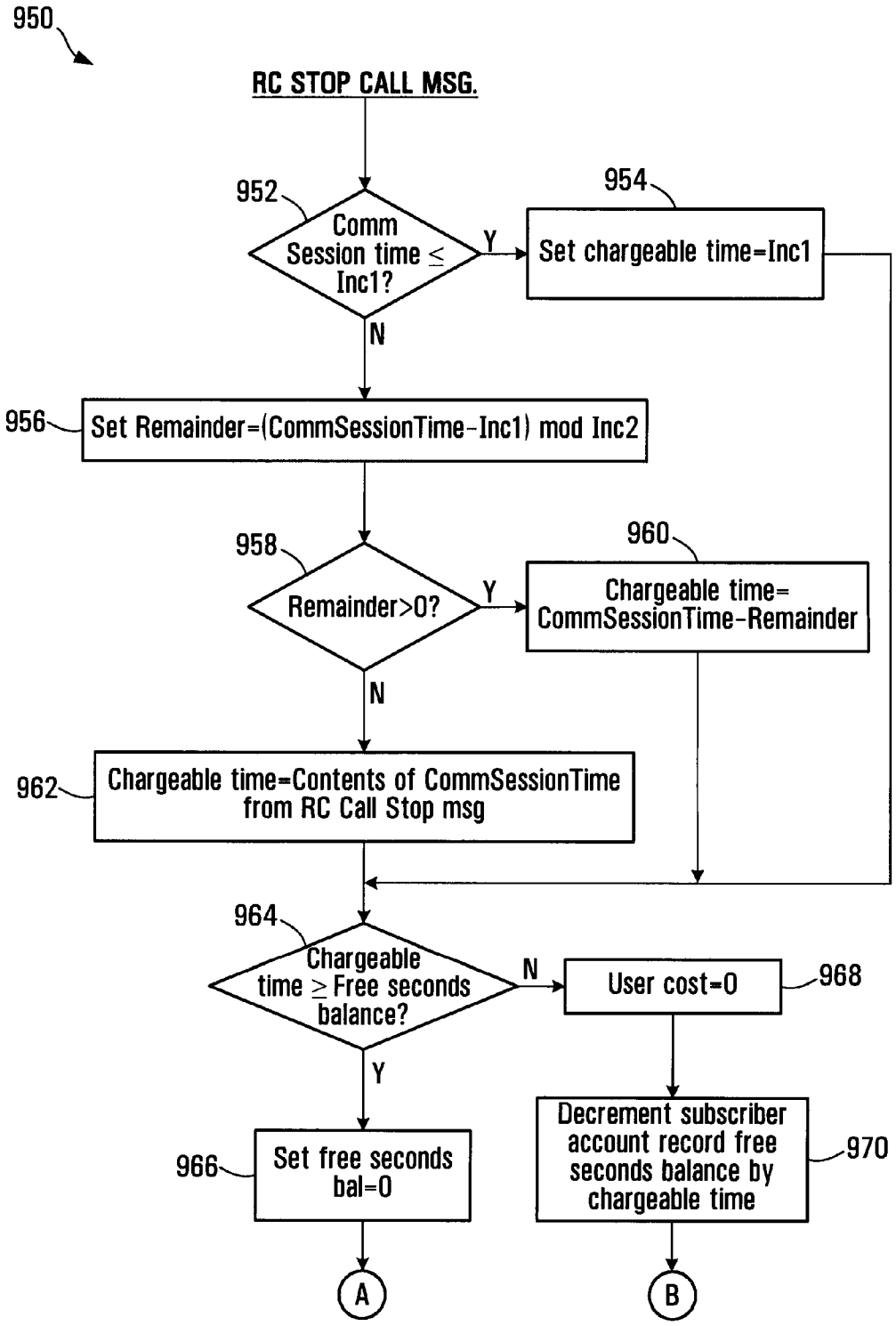

FIG. 56A

META 1016
META V. VOIP-PAL

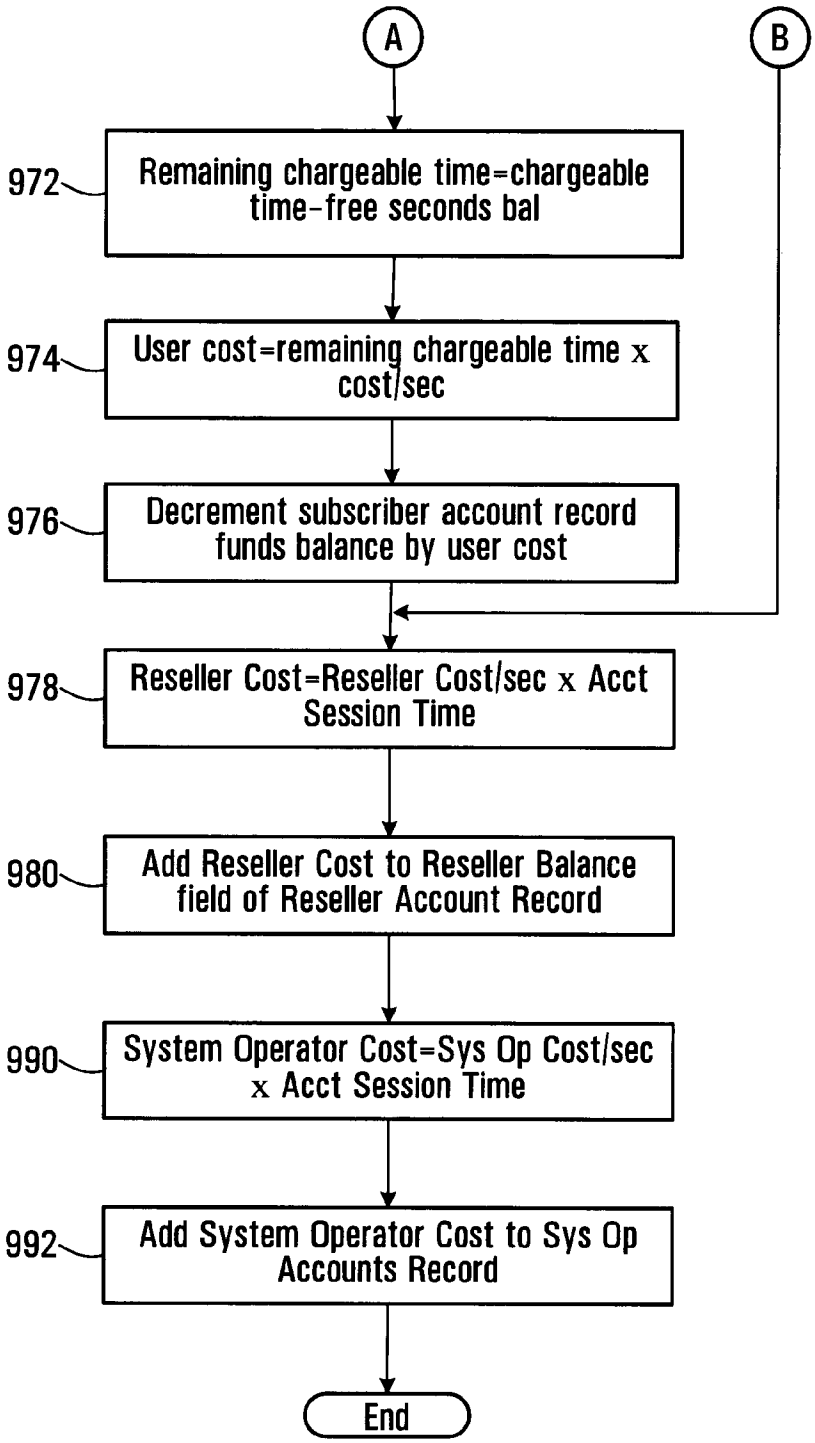

FIG. 56B

META 1016
META V. VOIP-PAL

982

Reseller Accounts Table Record

984	Reseller ID	reseller id code
986	Reseller balance	accumulated balance of charges

FIG. 57

988

Reseller Accounts Table Record for Klondike

984	Reseller ID	Klondike
986	Reseller balance	$100.02

FIG. 58

994

System Operator Accounts Table Record

996	System Operator balance	accumulated balance of charges

FIG. 59

System Operator Accounts Record for this System Operator

996	System Operator balance	$1000.02

FIG. 60

META 1016
META V. VOIP-PAL

PRODUCING ROUTING MESSAGES FOR VOICE OVER IP COMMUNICATIONS

This application is a national phase entry of PCT/CA2007/001956, filed Nov. 1, 2007, which claims priority to U.S. Provisional Application No. 60/856,212, filed Nov. 2, 2006, both of which are incorporated in their entirety.

BACKGROUND OF THE INVENTION

1. Field of Invention

This invention relates to voice over IP communications and methods and apparatus for routing and billing.

2. Description of Related Art

Internet protocol (IP) telephones are typically personal computer (PC) based telephones connected within an IP network, such as the public Internet or a private network of a large organization. These IP telephones have installed "voice-over-IP" (VoIP) software enabling them to make and receive voice calls and send and receive information in data and video formats.

IP telephony switches installed within the IP network enable voice calls to be made within or between IP networks, and between an IP network and a switched circuit network (SCN), such as the public switched telephone network (PSTN). If the IP switch supports the Signaling System 7 (SS7) protocol, the IP telephone can also access PSTN databases.

The PSTN network typically includes complex network nodes that contain all information about a local calling service area including user authentication and call routing. The PSTN network typically aggregates all information and traffic into a single location or node, processes it locally and then passes it on to other network nodes, as necessary, by maintaining route tables at the node. PSTN nodes are redundant by design and thus provide reliable service, but if a node should fail due to an earthquake or other natural disaster, significant, if not complete service outages can occur, with no other nodes being able to take up the load.

Existing VoIP systems do not allow for high availability and resiliency in delivering Voice Over IP based Session Initiation Protocol (SIP) Protocol service over a geographically dispersed area such as a city, region or continent. Most resiliency originates from the provision of IP based telephone services to one location or a small number of locations such as a single office or network of branch offices.

SUMMARY OF THE INVENTION

In accordance with one aspect of the invention, there is provided a process for operating a call routing controller to facilitate communication between callers and callees in a system comprising a plurality of nodes with which callers and callees are associated. The process involves, in response to initiation of a call by a calling subscriber, receiving a caller identifier and a callee identifier. The process also involves using call classification criteria associated with the caller identifier to classify the call as a public network call or a private network call. The process further involves producing a routing message identifying an address, on the private network, associated with the callee when the call is classified as a private network call. The process also involves producing a routing message identifying a gateway to the public network when the call is classified as a public network call.

The process may involve receiving a request to establish a call, from a call controller in communication with a caller identified by the callee identifier.

Using the call classification criteria may involve searching a database to locate a record identifying calling attributes associated with a caller identified by the caller identifier.

Locating a record may involve locating a caller dialing profile comprising a username associated with the caller, a domain associated with the caller, and at least one calling attribute.

Using the call classification criteria may involve comparing calling attributes associated with the caller dialing profile with aspects of the callee identifier.

Comparing may involve determining whether the callee identifier includes a portion that matches an IDD associated with the caller dialing profile.

Comparing may involve determining whether the callee identifier includes a portion that matches an NDD associated with the caller dialing profile.

Comparing may involve determining whether the callee identifier includes a portion that matches an area code associated with the caller dialing profile.

Comparing may involve determining whether the callee identifier has a length within a range specified in the caller dialing profile.

The process may involve formatting the callee identifier into a pre-defined digit format to produce a re-formatted callee identifier.

Formatting may involve removing an international dialing digit from the callee identifier, when the callee identifier begins with a digit matching an international dialing digit specified by the caller dialing profile associated with the caller.

Formatting may involve removing a national dialing digit from the callee identifier and prepending a caller country code to the callee identifier when the callee identifier begins with a national dialing digit.

Formatting may involve prepending a caller country code to the callee identifier when the callee identifier begins with digits identifying an area code specified by the caller dialing profile.

Formatting may involve prepending a caller country code and an area code to the callee identifier when the callee identifier has a length that matches a caller dialing number format specified by the caller dialing profile and only one area code is specified as being associated with the caller in the caller dialing profile.

The process may involve classifying the call as a private network call when the re-formatted callee identifier identifies a subscriber to the private network.

The process may involve determining whether the callee identifier complies with a pre-defined username format and if so, classifying the call as a private network call.

The process may involve causing a database of records to be searched to locate a direct in dial (DID) bank table record associating a public telephone number with the reformatted callee identifier and if the DID bank table record is found, classifying the call as a private network call and if a DID bank table record is not found, classifying the call as a public network call.

Producing the routing message identifying a node on the private network may involve setting a callee identifier in response to a username associated with the DID bank table record.

Producing the routing message may involve determining whether a node associated with the reformatted callee identifier is the same as a node associated the caller identifier.

Determining whether a node associated with the reformatted callee identifier is the same as a node associated the caller identifier may involve determining whether a prefix of the

META 1016
META V. VOIP-PAL

re-formatted callee identifier matches a corresponding prefix of a username associated with the caller dialing profile.

When the node associated with the caller is not the same as the node associated with the callee, the process involves producing a routing message including the caller identifier, the reformatted callee identifier and an identification of a private network node associated with the callee and communicating the routing message to a call controller.

When the node associated with the caller is the same as the node associated with the callee, the process involves determining whether to perform at least one of the following: forward the call to another party, block the call and direct the caller to a voicemail server associated with the callee.

Producing the routing message may involve producing a routing message having an identification of at least one of the callee identifier, an identification of a party to whom the call should be forwarded and an identification of a voicemail server associated with the callee.

The process may involve communicating the routing message to a call controller.

Producing a routing message identifying a gateway to the public network may involve searching a database of route records associating route identifiers with dialing codes to find a route record having a dialing code having a number pattern matching at least a portion of the reformatted callee identifier.

The process may involve searching a database of supplier records associating supplier identifiers with the route identifiers to locate at least one supplier record associated with the route identifier associated with the route record having a dialing code having a number pattern matching at least a portion of the reformatted callee identifier.

The process may involve loading a routing message buffer with the reformatted callee identifier and an identification of specific routes associated respective ones of the supplier records associated with the route record and loading the routing message buffer with a time value and a timeout value.

The process may involve communicating a routing message involving the contents of the routing message buffer to a call controller.

The process may involve causing the dialing profile to include a maximum concurrent call value and a concurrent call count value and causing the concurrent call count value to be incremented when the user associated with the dialing profile initiates a call and causing the concurrent call count value to be decremented when a call with the user associated with the dialing profile is ended.

In accordance with another aspect of the invention, there is provided a call routing apparatus for facilitating communications between callers and callees in a system comprising a plurality of nodes with which callers and callees are associated. The apparatus includes receiving provisions for receiving a caller identifier and a callee identifier, in response to initiation of a call by a calling subscriber. The apparatus also includes classifying provisions for classifying the call as a private network cal or a public network call according to call classification criteria associated with the caller identifier. The apparatus further includes provisions for producing a routing message identifying an address, on the private network, associated with the callee when the call is classified as a private network call. The apparatus also includes provisions for producing a routing message identifying a gateway to the public network when the call is classified as a public network call.

The receiving provisions may be operably configured to receive a request to establish a call, from a call controller in communication with a caller identified by the callee identifier.

The apparatus may further include searching provisions for searching a database including records associating calling attributes with subscribers to the private network to locate a record identifying calling attributes associated with a caller identified by the caller identifier.

The records may include dialing profiles each including a username associated with the subscriber, an identification of a domain associated with the subscriber, and an identification of at least one calling attribute associated with the subscriber.

The call classification provisions may be operably configured to compare calling attributes associated with the caller dialing profile with aspects of the callee identifier.

The calling attributes may include an international dialing digit and call classification provisions may be operably configured to determine whether the callee identifier includes a portion that matches an IDD associated with the caller dialing profile.

The calling attributes may include an national dialing digit and the call classification provisions may be operably configured to determine whether the callee identifier includes a portion that matches an NDD associated with the caller dialing profile.

The calling attributes may include an area code and the call classification provisions may be operably configured to determine whether the callee identifier includes a portion that matches an area code associated with the caller dialing profile.

The calling attribute may include a number length range and the call classification provisions may be operably configured to determine whether the callee identifier has a length within a number length range specified in the caller dialing profile.

The apparatus may further include formatting provisions for formatting the callee identifier into a pre-defined digit format to produce a re-formatted callee identifier.

The formatting provisions may be operably configured to remove an international dialing digit from the callee identifier, when the callee identifier begins with a digit matching an international dialing digit specified by the caller dialing profile associated with the caller.

The formatting provisions may be operably configured to remove a national dialing digit from the callee identifier and prepend a caller country code to the callee identifier when the callee identifier begins with a national dialing digit.

The formatting provisions may be operably configured to prepend a caller country code to the callee identifier when the callee identifier begins with digits identifying an area code specified by the caller dialing profile.

The formatting provisions may be operably configured to prepend a caller country code and area code to the callee identifier when the callee identifier has a length that matches a caller dialing number format specified by the caller dialing profile and only one area code is specified as being associated with the caller in the caller dialing profile.

The classifying provisions may be operably configured to classify the call as a private network call when the re-formatted callee identifier identifies a subscriber to the private network.

The classifying provisions may be operably configured to classify the call as a private network call when the callee identifier complies with a pre-defined username format.

The apparatus may further include searching provisions for searching a database of records to locate a direct in dial (DID) bank table record associating a public telephone number with the reformatted callee identifier and the classifying provisions may be operably configured to classify the call as a private network call when the DID bank table record is found and to classify the call as a public network call when a DID bank table record is not found

The private network routing message producing provisions may be operably configured to produce a routing message having a callee identifier set according to a username associated with the DID bank table record.

The private network routing message producing provisions may be operably configured to determine whether a node associated with the reformatted callee identifier is the same as a node associated the caller identifier.

The private network routing provisions may include provisions for determining whether a prefix of the re-formatted callee identifier matches a corresponding prefix of a username associated with the caller dialing profile.

The private network routing message producing provisions may be operably configured to produce a routing message including the caller identifier, the reformatted callee identifier and an identification of a private network node associated with the callee and to communicate the routing message to a call controller.

The private network routing message producing provisions may be operably configured to perform at least one of the following forward the call to another party, block the call and direct the caller to a voicemail server associated with the callee, when the node associated with the caller is the same as the node associated with the callee.

The provisions for producing the private network routing message may be operably configured to produce a routing message having an identification of at least one of the callee identifier, an identification of a party to whom the call should be forwarded and an identification of a voicemail server associated with the callee.

The apparatus further includes provisions for communicating the routing message to a call controller.

The provisions for producing a public network routing message identifying a gateway to the public network may include provisions for searching a database of route records associating route identifiers with dialing codes to find a route record having a dialing code having a number pattern matching at least a portion of the reformatted callee identifier.

The apparatus further includes provisions for searching a database of supplier records associating supplier identifiers with the route identifiers to locate at least one supplier record associated with the route identifier associated with the route record having a dialing code having a number pattern matching at least a portion of the reformatted callee identifier.

The apparatus further includes a routing message buffer and provisions for loading the routing message buffer with the reformatted callee identifier and an identification of specific routes associated respective ones of the supplier records associated with the route record and loading the routing message buffer with a time value and a timeout value.

The apparatus further includes provisions for communicating a routing message including the contents of the routing message buffer to a call controller.

The apparatus further includes means for causing said dialing profile to include a maximum concurrent call value and a concurrent call count value and for causing said concurrent call count value to be incremented when the user associated with said dialing profile initiates a call and for causing said concurrent call count value to be decremented when a call with said user associated with said dialing profile is ended.

In accordance with another aspect of the invention, there is provided a data structure for access by an apparatus for producing a routing message for use by a call routing controller in a communications system. The data structure includes dialing profile records comprising fields for associating with respective subscribers to the system, a subscriber user name, direct-in-dial records comprising fields for associating with respective subscriber usernames, a user domain and a direct-in-dial number, prefix to node records comprising fields for associating with at least a portion of the respective subscriber usernames, a node address of a node in the system, whereby a subscriber name can be used to find a user domain, at least a portion of the a subscriber name can be used to find a node with which the subscriber identified by the subscriber name is associated, and a user domain and subscriber name can be located in response to a direct-in-dial number.

In accordance with another aspect of the invention, there is provided a data structure for access by an apparatus for producing a routing message for use by a call routing controller in a communications system. The data structure includes master list records comprising fields for associating a dialing code with respective master list identifiers and supplier list records linked to master list records by the master list identifiers, said supplier list records comprising fields for associating with a communications services supplier, a supplier id, a master list id, a route identifier and a billing rate code, whereby communications services suppliers are associated with dialing codes, such that dialing codes can be used to locate suppliers capable of providing a communications link associated with a given dialing code.

In accordance with another aspect of the invention, there is provided a method for determining a time to permit a communication session to be conducted. The method involves calculating a cost per unit time, calculating a first time value as a sum of a free time attributed to a participant in the communication session and the quotient of a funds balance held by the participant to the cost per unit time value and producing a second time value in response to the first time value and a billing pattern associated with the participant, the billing pattern including first and second billing intervals and the second time value being the time to permit a communication session to be conducted.

Calculating the first time value may involve retrieving a record associated with the participant and obtaining from the record at least one of the free time and the funds balance.

Producing the second time value may involve producing a remainder value representing a portion of the second billing interval remaining after dividing the second billing interval into a difference between the first time value and the first billing interval.

Producing the second time value may involve setting a difference between the first time value and the remainder as the second time value.

The method may further involve setting the second time value to zero when the remainder is greater than zero and the first time value is less than the free time associated with the participant.

Calculating the cost per unit time may involve locating a record in a database, the record comprising a markup type indicator, a markup value and a billing pattern and setting a reseller rate equal to the sum of the markup value and the buffer rate.

Locating the record in a database may involve locating at least one of a record associated with a reseller and a route associated with the reseller, a record associated with the reseller and a default reseller markup record.

Calculating the cost per unit time value further may involve locating at least one of an override record specifying a route cost per unit time amount associated with a route associated with the communication session, a reseller record associated with a reseller of the communications session, the reseller record specifying a reseller cost per unit time associated with the reseller for the communication session, a default operator markup record specifying a default cost per unit time.

META 1016
META V. VOIP-PAL

The method may further involve setting as the cost per unit time the sum of the reseller rate and at least one of the route cost per unit time, the reseller cost per unit time and the default cost per unit time.

The method may further involve receiving a communication session time representing a duration of the communication session and incrementing a reseller balance by the product of the reseller rate and the communication session time.

The method may further involve receiving a communication session time representing a duration of the communication session and incrementing a system operator balance by a product of the buffer rate and the communication session time.

In accordance with another aspect of the invention, there is provided an apparatus for determining a time to permit a communication session to be conducted. The apparatus includes a processor circuit, a computer readable medium coupled to the processor circuit and encoded with instructions for directing the processor circuit to calculate a cost per unit time for the communication session, calculate a first time value as a sum of a free time attributed to a participant in the communication session and the quotient of a funds balance held by the participant to the cost per unit time value and produce a second time value in response to the first time value and a billing pattern associated with the participant, the billing pattern including first and second billing intervals and the second time value being the time to permit a communication session to be conducted.

The instructions may include instructions for directing the processor circuit to retrieve a record associated with the participant and obtain from the record at least one of the free time and the funds balance.

The instructions may include instructions for directing the processor circuit to produce the second time value by producing a remainder value representing a portion of the second billing interval remaining after dividing the second billing interval into a difference between the first time value and the first billing interval.

The instructions may include instructions for directing the processor circuit to produce the second time value comprises setting a difference between the first time value and the remainder as the second time value.

The instructions may include instructions for directing the processor circuit to set the second time value to zero when the remainder is greater than zero and the first time value is less than the free time associated with the participant.

The instructions for directing the processor circuit to calculate the cost per unit time may include instructions for directing the processor circuit to locate a record in a database, the record comprising a markup type indicator, a markup value and a billing pattern and set a reseller rate equal to the sum of the markup value and the buffer rate.

The instructions for directing the processor circuit to locate the record in a database may include instructions for directing the processor circuit to locate at least one of a record associated with a reseller and a route associated with the reseller, a record associated with the reseller, and a default reseller markup record. The instructions for directing the processor circuit to calculate the cost per unit time value may further include instructions for directing the processor circuit to locate at least one of an override record specifying a route cost per unit time amount associated with a route associated with the communication session, a reseller record associated with a reseller of the communications session, the reseller record specifying a reseller cost per unit time associated with the reseller for the communication session, a default operator markup record specifying a default cost per unit time.

The instructions may include instructions for directing the processor circuit to set as the cost per unit time the sum of the reseller rate and at least one of the route cost per unit time, the reseller cost per unit time and the default cost per unit time.

The instructions may include instructions for directing the processor circuit to receive a communication session time representing a duration of the communication session and increment a reseller balance by the product of the reseller rate and the communication session time.

The instructions may include instructions for directing the processor circuit to receive a communication session time representing a duration of the communication session and increment a system operator balance by a product of the buffer rate and the communication session time.

In accordance with another aspect of the invention, there is provided a process for attributing charges for communications services. The process involves determining a first chargeable time in response to a communication session time and a pre-defined billing pattern, determining a user cost value in response to the first chargeable time and a free time value associated with a user of the communications services, changing an account balance associated with the user in response to a user cost per unit time. The process may further involve changing an account balance associated with a reseller of the communications services in response to a reseller cost per unit time and the communication session time and changing an account balance associated with an operator of the communications services in response to an operator cost per unit time and the communication session time.

Determining the first chargeable time may involve locating at least one of an override record specifying a route cost per unit time and billing pattern associated with a route associated with the communication session, a reseller record associated with a reseller of the communications session, the reseller record specifying a reseller cost per unit time and billing pattern associated with the reseller for the communication session and a default record specifying a default cost per unit time and billing pattern and setting as the pre-defined billing pattern the billing pattern of the record located. The billing pattern of the record located may involve a first billing interval and a second billing interval.

Determining the first chargeable time may involve setting the first chargeable time equal to the first billing interval when the communication session time is less than or equal to the first billing interval.

Determining the first chargeable time may involve producing a remainder value representing a portion of the second billing interval remaining after dividing the second billing interval into a difference between communication session time and the first interval when the communication session time is greater than the communication session time and setting the first chargeable time to a difference between the communication session time and the remainder when the remainder is greater than zero and setting the first chargeable time to the communication session time when the remainder is not greater than zero.

The process may further involve determining a second chargeable time in response to the first chargeable time and the free time value associated with the user of the communications services when the first chargeable time is greater than or equal to the free time value associated with the user of the communications services.

Determining the second chargeable time may involve setting the second chargeable time to a difference between the first chargeable time.

The process may further involve resetting the free time value associated with the user to zero when the first chargeable time is greater than or equal to the free time value associated with the user of the communications services.

Changing an account balance associated with the user may involve calculating a user cost value in response to the second chargeable time and the user cost per unit time.

The process may further involve changing a user free cost balance in response to the user cost value.

The process may further involve setting the user cost to zero when the first chargeable time is less than the free time value associated with the user.

The process may further involve changing a user free time balance in response to the first chargeable time.

In accordance with another aspect of the invention, there is provided an apparatus for attributing charges for communications services. The apparatus includes a processor circuit, a computer readable medium in communication with the processor circuit and encoded with instructions for directing the processor circuit to determine a first chargeable time in response to a communication session time and a pre-defined billing pattern, determine a user cost value in response to the first chargeable time and a free time value associated with a user of the communications services, change an account balance associated with the user in response to a user cost per unit time.

The instructions may further include instructions for changing an account balance associated with a reseller of the communications services in response to a reseller cost per unit time and the communication session time and changing an account balance associated with an operator of the communications services in response to an operator cost per unit time and the communication session time.

The instructions for directing the processor circuit to determine the first chargeable time may further include instructions for causing the processor circuit to communicate with a database to locate at least one of an override record specifying a route cost per unit time and billing pattern associated with a route associated with the communication session, a reseller record associated with a reseller of the communications session, the reseller record specifying a reseller cost per unit time and billing pattern associated with the reseller for the communication session and a default record specifying a default cost per unit time and billing pattern and instructions for setting as the pre-defined billing pattern the billing pattern of the record located. The billing pattern of the record located may include a first billing interval and a second billing interval.

The instructions for causing the processor circuit to determine the first chargeable time may include instructions for directing the processor circuit to set the first chargeable time equal to the first billing interval when the communication session time is less than or equal to the first billing interval.

The instructions for causing the processor circuit to determine the first chargeable time may include instructions for producing a remainder value representing a portion of the second billing interval remaining after dividing the second billing interval into a difference between communication session time and the first interval when the communication session time is greater than the communication session time and instructions for causing the processor circuit to set the first chargeable time to a difference between the communication session time and the remainder when the remainder is greater than zero and instructions for causing the processor circuit to set the first chargeable time to the communication session time when the remainder is not greater than zero.

The instructions may further include instructions for causing the processor circuit to determine a second chargeable time in response to the first chargeable time and the free time value associated with the user of the communications services when the first chargeable time is greater than or equal to the free time value associated with the user of the communications services.

The instructions for causing the processor circuit to determine the second chargeable time may include instructions for causing the processor circuit to set the second chargeable time to a difference between the first chargeable time.

The instructions may further include instructions for causing the processor circuit to reset the free time value associated with the user to zero when the first chargeable time is greater than or equal to the free time value associated with the user of the communications services.

The instructions for causing the processor circuit to change an account balance associated with the user may include instructions for causing the processor circuit to calculate a user cost value in response to the second chargeable time and the user cost per unit time.

The instructions may further include instructions for causing the processor circuit to change a user free cost balance in response to the user cost value.

The instructions may further include instructions for causing the processor circuit to set the user cost to zero when the first chargeable time is less than the free time value associated with the user.

The instructions may further include instructions for causing the processor circuit to change a user free time balance in response to the first chargeable time.

In accordance with another aspect of the invention, there is provided a computer readable medium encoded with codes for directing a processor circuit to execute one or more of the methods described above and/or variants thereof.

Other aspects and features of the present invention will become apparent to those ordinarily skilled in the art upon review of the following description of specific embodiments of the invention in conjunction with the accompanying figures.

BRIEF DESCRIPTION OF THE DRAWINGS

In drawings which illustrate embodiments of the invention,

FIG. **1** is a block diagram of a system according to a first embodiment of the invention;

FIG. **2** is a block diagram of a caller telephone according to the first embodiment of the invention;

FIG. **3** is a schematic representation of a SIP invite message transmitted between the caller telephone and a controller shown in FIG. **1**;

FIG. **4** is a block diagram of a call controller shown in FIG. **1**;

FIG. **5** is a flowchart of a process executed by the call controller shown in FIG. **1**;

FIG. **6** is a schematic representation of a routing, billing and rating (RC) request message produced by the call controller shown in FIG. **1**;

FIG. **7** is a block diagram of a processor circuit of a routing, billing, rating element of the system shown in FIG. **1**;

FIGS. **8**A-**8**D is a flowchart of a RC request message handler executed by the RC processor circuit shown in FIG. **7**;

FIG. **9** is a tabular representation of a dialing profile stored in a database accessible by the RC shown in FIG. **1**;

FIG. **10** is a tabular representation of a dialing profile for a caller using the caller telephone shown in FIG. **1**;

META 1016
META V. VOIP-PAL

FIG. **11** is a tabular representation of a callee profile for a callee located in Calgary;

FIG. **12** is a tabular representation of a callee profile for a callee located in London;

FIG. **13** is a tabular representation of a Direct-in-Dial (DID) bank table record stored in the database shown in FIG. **1**;

FIG. **14** is a tabular representation of an exemplary DID bank table record for the Calgary callee referenced in FIG. **11**;

FIG. **15** is a tabular representation of a routing message transmitted from the RC to the call controller shown in FIG. **1**;

FIG. **16** is a schematic representation of a routing message buffer holding a routing message for routing a call to the Calgary callee referenced in FIG. **11**;

FIG. **17** is a tabular representation of a prefix to supernode table record stored in the database shown in FIG. **1**;

FIG. **18** is a tabular representation of a prefix to supernode table record that would be used for the Calgary callee referenced in FIG. **11**;

FIG. **19** is a tabular representation of a master list record stored in a master list table in the database shown in FIG. **1**;

FIG. **20** is a tabular representation of a populated master list record;

FIG. **21** is a tabular representation of a suppliers list record stored in the database shown in FIG. **1**;

FIG. **22** is a tabular representation of a specific supplier list record for a first supplier;

FIG. **23** is a tabular representation of a specific supplier list record for a second supplier;

FIG. **24** is a tabular representation of a specific supplier list record for a third supplier;

FIG. **25** is a schematic representation of a routing message, held in a routing message buffer, identifying to the controller a plurality of possible suppliers that may carry the call;

FIG. **26** is a tabular representation of a call block table record;

FIG. **27** is a tabular representation of a call block table record for the Calgary callee;

FIG. **28** is a tabular representation of a call forwarding table record;

FIG. **29** is a tabular representation of a call forwarding table record specific for the Calgary callee;

FIG. **30** is a tabular representation of a voicemail table record specifying voicemail parameters to enable the caller to leave a voicemail message for the callee;

FIG. **31** is a tabular representation of a voicemail table record specific to the Calgary callee;

FIG. **32** is a schematic representation of an exemplary routing message, held in a routing message buffer, indicating call forwarding numbers and a voicemail server identifier;

FIGS. **33**A and **33**B are respective portions of a flowchart of a process executed by the RC processor for determining a time to live value;

FIG. **34** is a tabular representation of a subscriber bundle table record;

FIG. **35** is a tabular representation of a subscriber bundle record for the Vancouver caller;

FIG. **36** is a tabular representation of a bundle override table record;

FIG. **37** is a tabular representation of bundle override record for a located master list ID;

FIG. **38** is a tabular representation of a subscriber account table record;

FIG. **39** is a tabular representation of a subscriber account record for the Vancouver caller;

FIG. **40** is a flowchart of a process for producing a second time value executed by the RC processor circuit shown in FIG. **7**;

FIG. **41** is a flowchart for calculating a call cost per unit time;

FIG. **42** is a tabular representation of a system operator special rates table record;

FIG. **43** is a tabular representation of a system operator special rates table record for a reseller named Klondike;

FIG. **44** is a tabular representation of a system operator mark-up table record;

FIG. **45** is a tabular representation of a system operator mark-up table record for the reseller Klondike;

FIG. **46** is a tabular representation of a default system operator mark-up table record;

FIG. **47** is a tabular representation of a reseller special destinations table record;

FIG. **48** is a tabular representation of a reseller special destinations table record for the reseller Klondike;

FIG. **49** is a tabular representation of a reseller global mark-up table record;

FIG. **50** is a tabular representation of a reseller global mark-up table record for the reseller Klondike;

FIG. **51** is a tabular representation of a SIP bye message transmitted from either of the telephones shown in FIG. **1** to the call controller;

FIG. **52** is a tabular representation of a SIP bye message sent to the controller from the Calgary callee;

FIG. **53** is a flowchart of a process executed by the call controller for producing a RC stop message in response to receipt of a SIP bye message;

FIG. **54** is a tabular representation of an exemplary RC call stop message;

FIG. **55** is a tabular representation of an RC call stop message for the Calgary callee;

FIGS. **56**A and **56**B are respective portions of a flowchart of a RC call stop message handling routine executed by the RC shown in FIG. **1**;

FIG. **57** is a tabular representation of a reseller accounts table record;

FIG. **58** is a tabular representation of a reseller accounts table record for the reseller Klondike;

FIG. **59** is a tabular representation of a system operator accounts table record; and

FIG. **60** is a tabular representation of a system operator accounts record for the system operator described herein.

DETAILED DESCRIPTION

Referring to FIG. **1**, a system for making voice over IP telephone/videophone calls is shown generally at **10**. The system includes a first super node shown generally at **11** and a second super node shown generally at **21**. The first super node **11** is located in geographical area, such as Vancouver, B.C., Canada for example and the second super node **21** is located in London, England, for example. Different super nodes may be located in different geographical regions throughout the world to provide telephone/videophone service to subscribers in respective regions. These super nodes may be in communication with each other by high speed/high data throughput links including optical fiber, satellite and/or cable links, forming a backbone to the system. These super nodes may alternatively or, in addition, be in communication with each other through conventional internet services.

In the embodiment shown, the Vancouver supernode **11** provides telephone/videophone service to western Canadian customers from Vancouver Island to Ontario. Another node

META 1016
META V. VOIP-PAL

(not shown) may be located in Eastern Canada to provide services to subscribers in that area.

Other nodes of the type shown may also be employed within the geographical area serviced by a supernode, to provide for call load sharing, for example within a region of the geographical area serviced by the supernode. However, in general, all nodes are similar and have the properties described below in connection with the Vancouver supernode **11**.

In this embodiment, the Vancouver supernode includes a call controller (C) **14**, a routing controller (RC) **16**, a database **18** and a voicemail server **19** and a media relay **9**. Each of these may be implemented as separate modules on a common computer system or by separate computers, for example. The voicemail server **19** need not be included in the node and can be provided by an outside service provider.

Subscribers such as a subscriber in Vancouver and a subscriber in Calgary communicate with the Vancouver supernode using their own internet service providers which route internet traffic from these subscribers over the internet shown generally at **13** in FIG. **1**. To these subscribers the Vancouver supernode is accessible at a pre-determined internet protocol (IP) address or a fully qualified domain name that can be accessed in the usual way through a subscriber's internet service provider. The subscriber in Vancouver uses a telephone **12** that is capable of communicating with the Vancouver supernode **11** using Session Initiation Protocol (SIP) messages and the Calgary subscriber uses a similar telephone **15**, in Calgary AB.

It should be noted that throughout the description of the embodiments of this invention, the IP/UDP addresses of all elements such as the caller and callee telephones, call controller, media relay, and any others, will be assumed to be valid IP/UDP addresses directly accessible via the Internet or a private IP network, for example, depending on the specific implementation of the system. As such, it will be assumed, for example, that the caller and callee telephones will have IP/UDP addresses directly accessible by the call controllers and the media relays on their respective supernodes, and those addresses will not be obscured by Network Address Translation (NAT) or similar mechanisms. In other words, the IP/UDP information contained in SIP messages (for example the SIP Invite message or the RC Request message which will be described below) will match the IP/UDP addresses of the IP packets carrying these SIP messages.

It will be appreciated that in many situations, the IP addresses assigned to various elements of the system may be in a private IP address space, and thus not directly accessible from other elements. Furthermore, it will also be appreciated that NAT is commonly used to share a "public" IP address between multiple devices, for example between home PCs and IP telephones sharing a single Internet connection. For example, a home PC may be assigned an IP address such as 192.168.0.101 and a Voice over IP telephone may be assigned an IP address of 192.168.0.103. These addresses are located in so called "non-routable" (IP) address space and cannot be accessed directly from the Internet. In order for these devices to communicate with other computers located on the Internet, these IP addresses have to be converted into a "public" IP address, for example 24.10.10.123 assigned by the Internet Service Provider to the subscriber, by a device performing NAT, typically a home router. In addition to translating the IP addresses, NAT typically also translates UDP port numbers, for example an audio path originating at a VoIP telephone and using a UDP port **12378** at its private IP address, may have be translated to a UDP port **23465** associated with the public IP address of the NAT device. In other words, when a packet originating from the above VoIP telephone arrives at an Internet-based supernode, the source IP/UDP address contained in the IP packet header will be 24.10.10.1:23465, whereas the source IP/UDP address information contained in the SIP message inside this IP packet will be 192.168.0.103:12378. The mismatch in the IP/UDP addresses may cause a problem for SIP-based VoIP systems because, for example, a supernode will attempt to send messages to a private address of a telephone but the messages will never get there.

Referring to FIG. **1**, in an attempt to make a call by the Vancouver telephone/videophone **12** to the Calgary telephone/videophone **15**, the Vancouver telephone/videophone sends a SIP invite message to the Vancouver supernode **11** and in response, the call controller **14** sends an RC request message to the RC **16** which makes various enquiries of the database **18** to produce a routing message which is sent back to the call controller **14**. The call controller **14** then communicates with the media relay **9** to cause a communications link including an audio path and a videophone (if a videopath call) to be established through the media relay to the same node, a different node or to a communications supplier gateway as shown generally at **20** to carry audio, and where applicable, video traffic to the call recipient or callee.

Generally, the RC **16** executes a process to facilitate communication between callers and callees. The process involves, in response to initiation of a call by a calling subscriber, receiving a callee identifier from the calling subscriber, using call classification criteria associated with the calling subscriber to classify the call as a public network call or a private network call and producing a routing message identifying an address on the private network, associated with the callee when the call is classified as a private network call and producing a routing message identifying a gateway to the public network when the call is classified as a public network call.

Subscriber Telephone

In greater detail, referring to FIG. **2**, in this embodiment, the telephone/videophone **12** includes a processor circuit shown generally at **30** comprising a microprocessor **32**, program memory **34**, an input/output (I/O) port **36**, parameter memory **38** and temporary memory **40**. The program memory **34**, I/O port **36**, parameter memory **38** and temporary memory **40** are all in communication with the microprocessor **32**. The I/O port **36** has a dial input **42** for receiving a dialled telephone/videophone number from a keypad, for example, or from a voice recognition unit or from pre-stored telephone/videophone numbers stored in the parameter memory **38**, for example. For simplicity, in FIG. **2** a box labelled dialing functions **44** represents any device capable of informing the microprocessor **32** of a callee identifier, e.g., a callee telephone/videophone number.

The processor **32** stores the callee identifier in a dialled number buffer **45**. In this case, assume the dialled number is 2001 1050 2222 and that it is a number associated with the Calgary subscriber. The I/O port **36** also has a handset interface **46** for receiving and producing signals from and to a handset that the user may place to his ear. This interface **46** may include a BLUETOOTH™ wireless interface, a wired interface or speaker phone, for example. The handset acts as a termination point for an audio path (not shown) which will be appreciated later. The I/O port **36** also has an internet connection **48** which is preferably a high speed internet connection and is operable to connect the telephone/videophone to an internet service provider. The internet connection **48** also acts as a part of the voice path, as will be appreciated later. It will be appreciated that where the subscriber device is a videophone, a separate video path is established in the same way an audio path is established. For simplicity, the following

META 1016
META V. VOIP-PAL

description refers to a telephone call, but it is to be understood that a videophone call is handled similarly, with the call controller causing the media relay to facilitate both an audio path and a video path instead of only an audio path.

The parameter memory **38** has a username field **50**, a password field **52** an IP address field **53** and a SIP proxy address field **54**, for example. The user name field **50** is operable to hold a user name, which in this case is 2001 1050 8667. The user name is assigned upon subscription or registration into the system and, in this embodiment, includes a twelve digit number having a continent code **61**, a country code **63**, a dealer code **70** and a unique number code **74**. The continent code **61** is comprised of the first or left-most digit of the user name in this embodiment. The country code **63** is comprised of the next three digits. The dealer code **70** is comprised of the next four digits and the unique number code **74** is comprised of the last four digits. The password field **52** holds a password of up to 512 characters, in this example. The IP address field **53** stores an IP address of the telephone, which for this explanation is 192.168.0.20. The SIP proxy address field **54** holds an IP protocol compatible proxy address which may be provided to the telephone through the internet connection **48** as part of a registration procedure.

The program memory **34** stores blocks of codes for directing the processor **32** to carry out the functions of the telephone, one of which includes a firewall block **56** which provides firewall functions to the telephone, to prevent access by unauthorized persons to the microprocessor **32** and memories **34**, **38** and **40** through the internet connection **48**. The program memory **34** also stores codes **57** for establishing a call ID. The call ID codes **57** direct the processor **32** to produce a call identifier having a format comprising a hexadecimal string at an IP address, the IP address being the IP address of the telephone. Thus, an exemplary call identifier might be FF10@192.168.0.20.

Generally, in response to picking up the handset interface **46** and activating a dialing function **44**, the microprocessor **32** produces and sends a SIP invite message as shown in FIG. **3**, to the routing controller **16** shown in FIG. **1**. This SIP invite message is essentially to initiate a call by a calling subscriber.

Referring to FIG. **3**, the SIP invite message includes a caller ID field **60**, a callee identifier field **62**, a digest parameters field **64**, a call ID field **65** an IP address field **67** and a caller UDP port field **69**. In this embodiment, the caller ID field **60** includes the user name 2001 1050 8667 that is the Vancouver user name stored in the user name field **50** of the parameter memory **38** in the telephone **12** shown in FIG. **2**. In addition, referring back to FIG. **3**, the callee identifier field **62** includes a callee identifier which in this embodiment is the user name 2001 1050 2222 that is the dialled number of the Calgary subscriber stored in the dialled number buffer **45** shown in FIG. **2**. The digest parameters field **64** includes digest parameters and the call ID field **65** includes a code comprising a generated prefix code (FF10) and a suffix which is the Internet Protocol (IP) address of the telephone **12** stored in the IP address field **53** of the telephone. The IP address field **67** holds the IP address assigned to the telephone, in this embodiment 192.168.0.20, and the caller UDP port field **69** includes a UDP port identifier identifying a UDP port at which the audio path will be terminated at the caller's telephone.

Call Controller

Referring to FIG. **4**, a call controller circuit of the call controller **14** (FIG. **1**) is shown in greater detail at **100**. The call controller circuit **100** includes a microprocessor **102**, program memory **104** and an I/O port **106**. The circuit **100** may include a plurality of microprocessors, a plurality of program memories and a plurality of I/O ports to be able to handle a large volume of calls. However, for simplicity, the call controller circuit **100** will be described as having only one microprocessor **102**, program memory **104** and I/O port **106**, it being understood that there may be more.

Generally, the I/O port **106** includes an input **108** for receiving messages such as the SIP invite message shown in FIG. **3**, from the telephone shown in FIG. **2**. The I/O port **106** also has an RC request message output **110** for transmitting an RC request message to the RC **16** of FIG. **1**, an RC message input **112** for receiving routing messages from the RC **16**, a gateway output **114** for transmitting messages to one of the gateways **20** shown in FIG. **1** to advise the gateway to establish an audio path, for example, and a gateway input **116** for receiving messages from the gateway. The I/O port **106** further includes a SIP output **118** for transmitting messages to the telephone **12** to advise the telephone of the IP addresses of the gateways which will establish the audio path. The I/O port **106** further includes a voicemail server input and output **117**, **119** respectively for communicating with the voicemail server **19** shown in FIG. **1**.

While certain inputs and outputs have been shown as separate, it will be appreciated that some may be a single IP address and IP port. For example, the messages sent to the RC **16** and received from the RC **16** may be transmitted and received on the same single IP port.

The program memory **104** includes blocks of code for directing the microprocessor **102** to carry out various functions of the call controller **14**. For example, these blocks of code include a first block **120** for causing the call controller circuit **100** to execute a SIP invite to RC request process to produce an RC request message in response to a received SIP invite message. In addition, there is a routing message to gateway message block **122** which causes the call controller circuit **100** to produce a gateway query message in response to a received routing message from the RC **16**.

Referring to FIG. **5**, the SIP invite to RC request process is shown in more detail at **120**. On receipt of a SIP invite message of the type shown in FIG. **3**, block **122** of FIG. **5** directs the call controller circuit **100** of FIG. **4** to authenticate the user. This may be done, for example, by prompting the user for a password, by sending a message back to the telephone **12** which is interpreted at the telephone as a request for a password entry or the password may automatically be sent to the call controller **14** from the telephone, in response to the message. The call controller **14** may then make enquiries of databases to which it has access, to determine whether or not the user's password matches a password stored in the database. Various functions may be used to pass encryption keys or hash codes back and forth to ensure that the transmittal of passwords is secure.

Should the authentication process fail, the call controller circuit **100** is directed to an error handling routine **124** which causes messages to be displayed at the telephone **12** to indicate there was an authentication problem. If the authentication procedure is passed, block **121** directs the call controller circuit **100** to determine whether or not the contents of the caller ID field **60** of the SIP invite message received from the telephone is an IP address. If it is an IP address, then block **123** directs the call controller circuit **100** to set the contents of a type field variable maintained by the microprocessor **102** to a code representing that the call type is a third party invite. If at block **121** the caller ID field contents do not identify an IP address, then block **125** directs the microprocessor to set the contents of the type field to a code indicating that the call is being made by a system subscriber. Then, block **126** directs the call controller circuit to read the call identifier **65** provided

META 1016
META V. VOIP-PAL

in the SIP invite message from the telephone **12**, and at block **128** the processor is directed to produce an RC request message that includes that call ID. Block **129** then directs the call controller circuit **100** to send the RC request to the RC **16**.

Referring to FIG. **6**, an RC request message is shown generally at **150** and includes a caller field **152**, a callee field **154**, a digest field **156**, a call ID field **158** and a type field **160**. The caller, callee, digest call ID fields **152**, **154**, **156** and **158** contain copies of the caller, callee, digest parameters and call ID fields **60**, **62**, **64** and **65** of the SIP invite message shown in FIG. **3**. The type field **160** contains the type code established at blocks **123** or **125** of FIG. **5** to indicate whether the call is from a third party or system subscriber, respectively. The caller identifier field may include a PSTN number or a system subscriber username as shown, for example.

Routine Controller (RC)

Referring to FIG. **7**, the RC **16** is shown in greater detail and includes an RC processor circuit shown generally at **200**. The RC processor circuit **200** includes a processor **202**, program memory **204**, a table memory **206**, buffer memory **207**, and an I/O port **208**, all in communication with the processor **202**. (As earlier indicated, there may be a plurality of processor circuits (**202**), memories (**204**), etc.)

The buffer memory **207** includes a caller id buffer **209** and a callee id buffer **211**.

The I/O port **208** includes a database request port **210** through which a request to the database (**18** shown in FIG. **1**) can be made and includes a database response port **212** for receiving a reply from the database **18**. The I/O port **208** further includes an RC request message input **214** for receiving the RC request message from the call controller (**14** shown in FIG. **1**) and includes a routing message output **216** for sending a routing message back to the call controller **14**. The I/O port **208** thus acts to receive caller identifier and a callee identifier contained in the RC request message from the call controller, the RC request message being received in response to initiation of a call by a calling subscriber.

The program memory **204** includes blocks of codes for directing the processor **202** to carry out various functions of the RC (**16**). One of these blocks includes an RC request message handler **250** which directs the RC to produce a routing message in response to a received RC request message. The RC request message handler process is shown in greater detail at **250** in FIGS. **8**A through **8**D.

RC Request Message Handler

Referring to FIG. **8**A, the RC request message handler begins with a first block **252** that directs the RC processor circuit (**200**) to store the contents of the RC request message (**150**) in buffers in the buffer memory **207** of FIG. **7**, one of which includes the caller ID buffer **209** of FIG. **7** for separately storing the contents of the callee field **154** of the RC request message. Block **254** then directs the RC processor circuit to use the contents of the caller field **152** in the RC request message shown in FIG. **6**, to locate and retrieve from the database **18** a record associating calling attributes with the calling subscriber. The located record may be referred to as a dialing profile for the caller. The retrieved dialing profile may then be stored in the buffer memory **207**, for example.

Referring to FIG. **9**, an exemplary data structure for a dialing profile is shown generally at **253** and includes a user name field **258**, a domain field **260**, and calling attributes comprising a national dialing digits (NDD) field **262**, an international dialing digits (IDD) field **264**, a country code field **266**, a local area codes field **267**, a caller minimum local length field **268**, a caller maximum local length field **270**, a reseller field **273**, a maximum number of concurrent calls field **275** and a current number of concurrent calls field **277**. Effectively the dialing profile is a record identifying calling attributes of the caller identified by the caller identifier. More generally, dialing profiles represent calling attributes of respective subscribers.

An exemplary caller profile for the Vancouver subscriber is shown generally at **276** in FIG. **10** and indicates that the user name field **258** includes the user name (2001 1050 8667) that has been assigned to the subscriber and is stored in the user name field **50** in the telephone as shown in FIG. **2**.

Referring back to FIG. **10**, the domain field **260** includes a domain name as shown at **282**, including a node type identifier **284**, a location code identifier **286**, a system provider identifier **288** and a domain portion **290**. The domain field **260** effectively identifies a domain or node associated with the user identified by the contents of the user name field **258**.

In this embodiment, the node type identifier **284** includes the code "sp" identifying a supernode and the location identifier **286** identifies the supernode as being in Vancouver (YVR). The system provider identifier **288** identifies the company supplying the service and the domain portion **290** identifies the "com" domain.

The national dialled digit field **262** in this embodiment includes the digit "1" and, in general, includes a number specified by the International Telecommunications Union (ITU) Telecommunications Standardization Sector (ITU-T) E.164 Recommendation which assigns national dialing digits to countries.

The international dialing digit field **264** includes a code also assigned according to the ITU-T according to the country or location of the user.

The country code field **266** also includes the digit "1" and, in general, includes a number assigned according to the ITU-T to represent the country in which the user is located.

The local area codes field **267** includes a list of area codes that have been assigned by the ITU-T to the geographical area in which the subscriber is located. The caller minimum and maximum local number length fields **268** and **270** hold numbers representing minimum and maximum local number lengths permitted in the area code(s) specified by the contents of the local area codes field **267**. The reseller field **273** is optional and holds a code identifying a retailer of the services, in this embodiment "Klondike". The maximum number of concurrent calls field **275** holds a code identifying the maximum number of concurrent calls that the user is entitled to cause to concurrently exist. This permits more than one call to occur concurrently while all calls for the user are billed to the same account. The current number of concurrent calls field **277** is initially 0 and is incremented each time a concurrent call associated with the user is initiated and is decremented when a concurrent call is terminated.

The area codes associated with the user are the area codes associated with the location code identifier **286** of the contents of the domain field **260**.

A dialing profile of the type shown in FIG. **9** is produced whenever a user registers with the system or agrees to become a subscriber to the system. Thus, for example, a user wishing to subscribe to the system may contact an office maintained by a system operator and personnel in the office may ask the user certain questions about his location and service preferences, whereupon tables can be used to provide office personnel with appropriate information to be entered into the user name **258**, domain **260**, NDD **262**, IDD **264**, country code **266**, local area codes **267**, caller minimum and maximum local length fields **268** and **270** reseller field **273** and concurrent call fields **275** and **277** to establish a dialing profile for the user.

META 1016
META V. VOIP-PAL

Referring to FIGS. **11** and **12**, callee dialing profiles for users in Calgary and London, respectively for example, are shown.

In addition to creating dialing profiles when a user registers with the system, a direct-in-dial (DID) record of the type shown at **278** in FIG. **13** is added to a direct-in-dial bank table in the database (**18** in FIG. **1**) to associate the username and a host name of the supernode with which the user is associated, with an E.164 number associated with the user on the PSTN network.

An exemplary DID table record entry for the Calgary callee is shown generally at **300** in FIG. **14**. The user name field **281** and user domain field **272** are analogous to the user name and user domain fields **258** and **260** of the caller dialing profile shown in FIG. **10**. The contents of the DID field **274** include a E.164 public telephone number including a country code **283**, an area code **285**, an exchange code **287** and a number **289**. If the user has multiple telephone numbers, then multiple records of the type shown at **300** would be included in the DID bank table, each having the same user name and user domain, but different DID field **274** contents reflecting the different telephone numbers associated with that user.

In addition to creating dialing profiles as shown in FIG. **9** and DID records as shown in FIG. **13** when a user registers with the system, call blocking records of the type shown in FIG. **26**, call forwarding records of the type shown in FIG. **28** and voicemail records of the type shown in FIG. **30** may be added to the database **18** when a new subscriber is added to the system.

Referring back to FIG. **8**A, after retrieving a dialing profile for the caller, such as shown at **276** in FIG. **10**, the RC processor circuit **200** is directed to block **256** which directs the processor circuit (**200**) to determine whether the contents of the concurrent call field **277** are less then the contents of the maximum concurrent call field **275** of the dialing profile for the caller and, if so, block **271** directs the processor circuit to increment the contents of the concurrent call field **277**. If the contents of concurrent call field **277** are equal to or greater than the contents of the maximum concurrent call field **275**, block **259** directs the processor circuit **200** to send an error message back to the call controller (**14**) to cause the call controller to notify the caller that the maximum number of concurrent calls has been reached and no further calls can exist concurrently, including the presently requested call.

Assuming block **256** allows the call to proceed, the RC processor circuit **200** is directed to perform certain checks on the callee identifier provided by the contents of the callee field **154** in FIG. **6**, of the RC request message **150**. These checks are shown in greater detail in FIG. **8**B.

Referring to FIG. **8**B, the processor (**202** in FIG. **7**) is directed to a first block **257** that causes it to determine whether a digit pattern of the callee identifier (**154**) provided in the RC request message (**150**) includes a pattern that matches the contents of the international dialing digits (IDD) field **264** in the caller profile shown in FIG. **10**. If so, then block **259** directs the processor (**202**) to set a call type code identifier variable maintained by the processor to indicate that the call is an international call and block **261** directs the processor to produce a reformatted callee identifier by reformatting the callee identifier into a predefined digit format. In this embodiment, this is done by removing the pattern of digits matching the IDD field contents **264** of the caller dialing profile to effectively shorten the callee identifier. Then, block **263** directs the processor **202** to determine whether or not the callee identifier has a length which meets criteria establishing it as a number compliant with the E.164 Standard set by the ITU. If the length does not meet this criteria, block **265** directs the processor **202** to send back to the call controller (**14**) a message indicating the length is not correct. The process is then ended. At the call controller **14**, routines (not shown) stored in the program memory **104** may direct the processor (**102** of FIG. **4**) to respond to the incorrect length message by transmitting a message back to the telephone (**12** shown in FIG. **1**) to indicate that an invalid number has been dialled.

Still referring to FIG. **8**B, if the length of the amended callee identifier meets the criteria set forth at block **263**, block **269** directs the processor (**202** of FIG. **7**) to make a database request to determine whether or not the amended callee identifier is found in a record in the direct-in-dial bank (DID) table. Referring back to FIG. **8**B, at block **269**, if the processor **202** receives a response from the database indicating that the reformatted callee identifier produced at block **261** is found in a record in the DID bank table, then the callee is a subscriber to the system and the call is classified as a private network call by directing the processor to block **279** which directs the processor to copy the contents of the corresponding user name field (**281** in FIG. **14**) from the callee DID bank table record (**300** in FIG. **14**) into the callee ID buffer (**211** in FIG. **7**). Thus, the processor **202** locates a subscriber user name associated with the reformatted callee identifier. The processor **202** is then directed to point B in FIG. **8**A.

Subscriber to Subscriber Calls Between Different Nodes

Referring to FIG. **8**A, block **280** directs the processor (**202** of FIG. **7**) to execute a process to determine whether or not the node associated with the reformatted callee identifier is the same node that is associated with the caller identifier. To do this, the processor **202** determines whether or not a prefix (e.g., continent code **61**) of the callee name held in the callee ID buffer (**211** in FIG. **7**), is the same as the corresponding prefix of the caller name held in the username field **258** of the caller dialing profile shown in FIG. **10**. If the corresponding prefixes are not the same, block **302** in FIG. **8**A directs the processor (**202** in FIG. **7**) to set a call type flag in the buffer memory (**207** in FIG. **7**) to indicate the call is a cross-domain call. Then, block **350** of FIG. **8**A directs the processor (**202** of FIG. **7**) to produce a routing message identifying an address on the private network with which the callee identified by the contents of the callee ID buffer is associated and to set a time to live for the call at a maximum value of 99999, for example.

Thus the routing message includes a caller identifier, a call identifier set according to a username associated with the located DID bank table record and includes an identifier of a node on the private network with which the callee is associated.

The node in the system with which the callee is associated is determined by using the callee identifier to address a supernode table having records of the type as shown at **370** in FIG. **17**. Each record **370** has a prefix field **372** and a supernode address field **374**. The prefix field **372** includes the first n digits of the callee identifier. In this embodiment n=2. The supernode address field **374** holds a code representing the IP address or a fully qualified domain name of the node associated with the code stored in the callee identifier prefix field **372**. Referring to FIG. **18**, for example, if the prefix is 20, the supernode address associated with that prefix is sp.yvr.digifonica.com.

Referring to FIG. **15**, a generic routing message is shown generally at **352** and includes an optional supplier prefix field **354**, and optional delimiter field **356**, a callee user name field **358**, at least one route field **360**, a time to live field **362** and other fields **364**. The optional supplier prefix field **354** holds a code for identifying supplier traffic. The optional delimiter field **356** holds a symbol that delimits the supplier prefix code

META 1016
META V. VOIP-PAL

from the callee user name field **358**. In this embodiment, the symbol is a number sign (#). The route field **360** holds a domain name or IP address of a gateway or node that is to carry the call, and the time to live field **362** holds a value representing the number of seconds the call is permitted to be active, based on subscriber available minutes and other billing parameters.

Referring to FIG. **8**A and FIG. **16**, an example of a routing message produced by the processor at block **350** for a caller associated with a different node than the caller is shown generally at **366** and includes only a callee field **359**, a route field **361** and a time to live field **362**.

Referring to FIG. **8**A, having produced a routing message as shown in FIG. **16**, block **381** directs the processor (**202** of FIG. **7**) to send the routing message shown in FIG. **16** to the call controller **14** shown in FIG. **1**.

Referring back to FIG. **8**B, if at block **257**, the callee identifier stored in the callee id buffer (**211** in FIG. **7**) does not begin with an international dialing digit, block **380** directs the processor (**202**) to determine whether or not the callee identifier begins with the same national dial digit code as assigned to the caller. To do this, the processor (**202**) is directed to refer to the retrieved caller dialing profile as shown in FIG. **10**. In FIG. **10**, the national dialing digit code **262** is the number 1. Thus, if the callee identifier begins with the number 1, then the processor (**202**) is directed to block **382** in FIG. **8**B.

Block **382** directs the processor (**202** of FIG. **7**) to examine the callee identifier to determine whether or not the digits following the NDD digit identify an area code that is the same as any of the area codes identified in the local area codes field **267** of the caller dialing profile **276** shown in FIG. **10**. If not, block **384** of FIG. **8**B directs the processor **202** to set the call type flag to indicate that the call is a national call. If the digits following the NDD digit identify an area code that is the same as a local area code associated with the caller as indicated by the caller dialing profile, block **386** directs the processor **202** to set the call type flag to indicate a local call, national style. After executing blocks **384** or **386**, block **388** directs the processor **202** to format the callee identifier into a pre-defined digit format to produce a re-formatted callee identifier by removing the national dialled digit and prepending a caller country code identified by the country code field **266** of the caller dialing profile shown in FIG. **10**. The processor (**202**) is then directed to block **263** of FIG. **8**B to perform other processing as already described above.

If at block **380**, the callee identifier does not begin with a national dialled digit, block **390** directs the processor (**202**) to determine whether the callee identifier begins with digits that identify the same area code as the caller. Again, the reference for this is the retrieved caller dialing profile shown in FIG. **10**. The processor (**202**) determines whether or not the first few digits of the callee identifier identify an area code corresponding to the local area code field **267** of the retrieved caller dialing profile. If so, then block **392** directs the processor **202** to set the call type flag to indicate that the call is a local call and block **394** directs the processor (**202**) to format the callee identifier into a pre-defined digit format to produce a reformatted callee identifier by prepending the caller country code to the callee identifier, the caller country code being determined from the country code field **266** of the retrieved caller dialing profile shown in FIG. **10**. The processor (**202**) is then directed to block **263** for further processing as described above.

Referring back to FIG. **8**B, at block **390**, the callee identifier does not start with the same area code as the caller, block **396** directs the processor (**202** of FIG. **7**) to determine whether the number of digits in the callee identifier, i.e. the length of the callee identifier, is within the range of digits indicated by the caller minimum local number length field **268** and the caller maximum local number length field **270** of the retrieved caller dialing profile shown in FIG. **10**. If so, then block **398** directs the processor (**202**) to set the call type flag to indicate a local call and block **400** directs the processor (**202**) to format the callee identifier into a pre-defined digit format to produce a reformatted callee identifier by prepending to the callee identifier the caller country code (as indicated by the country code field **266** of the retrieved caller dialing profile shown in FIG. **10**) followed by the caller area code (as indicated by the local area code field **267** of the caller profile shown in FIG. **10**). The processor (**202**) is then directed to block **263** of FIG. **8**B for further processing as described above.

Referring back to FIG. **8**B, if at block **396**, the callee identifier has a length that does not fall within the range specified by the caller minimum local number length field (**268** in FIG. **10**) and the caller maximum local number length field (**270** in FIG. **10**), block **402** directs the processor **202** of FIG. **7** to determine whether or not the callee identifier identifies a valid user name. To do this, the processor **202** searches through the database (**18** of FIG. **10** of dialing profiles to find a dialing profile having user name field contents (**258** in FIG. **10**) that match the callee identifier. If no match is found, block **404** directs the processor (**202**) to send an error message back to the call controller (**14**). If at block **402**, a dialing profile having a user name field **258** that matches the callee identifier is found, block **406** directs the processor **202** to set the call type flag to indicate that the call is a private network call and then the processor is directed to block **280** of FIG. **8**A. Thus, the call is classified as a private network call when the callee identifier identifies a subscriber to the private network.

From FIG. **8**B, it will be appreciated that there are certain groups of blocks of codes that direct the processor **202** in FIG. **7** to determine whether the callee identifier has certain features such as an international dialing digit, a national dialing digit, an area code and a length that meet certain criteria, and cause the processor **202** to reformat the callee identifier stored in the callee id buffer **211**, as necessary into a predetermined target format including only a country code, area code, and a normal telephone number, for example, to cause the callee identifier to be compatible with the E.164 number plan standard in this embodiment. This enables block **269** in FIG. **8**B to have a consistent format of callee identifiers for use in searching through the DID bank table records of the type shown in FIG. **13** to determine how to route calls for subscriber to subscriber calls on the same system. Effectively, therefore blocks **257**, **380**, **390**, **396** and **402** establish call classification criteria for classifying the call as a public network call or a private network call. Block **269** classifies the call, depending on whether or not the formatted callee identifier has a DID bank table record and this depends on how the call classification criteria are met and block **402** directs the processor **202** of FIG. **7** to classify the call as a private network call when the callee identifier complies with a predefined format, i.e. is a valid user name and identifies a subscriber to the private network, after the callee identifier has been subjected to the classification criteria of blocks **257**, **380**, **390** and **396**.

Subscriber to Non-Subscriber Calls

Not all calls will be subscriber to subscriber calls and this will be detected by the processor **202** of FIG. **7** when it executes block **269** in FIG. **8**B, and does not find a DID bank table record that is associated with the callee, in the DID bank table. When this occurs, the call is classified as a public network call by directing the processor **202** to block **408** of

META 1016
META V. VOIP-PAL

FIG. **8**B which causes it to set the contents of the callee id buffer **211** of FIG. **7** equal to the newly formatted callee identifier, i.e., a number compatible with the E.164 standard. Then, block **410** of FIG. **8**B directs the processor (**202**) to search a database of route or master list records associating route identifiers with dialing codes shown in FIG. **19** to locate a router having a dialing code having a number pattern matching at least a portion of the reformatted callee identifier.

Referring to FIG. **19**, a data structure for a master list or route list record is shown. Each master list record includes a master list ID field **500**, a dialing code field **502**, a country code field **504**, a national sign number field **506**, a minimum length field **508**, a maximum length field **510**, a national dialled digit field **512**, an international dialled digit field **514** and a buffer rate field **516**.

The master list ID field **500** holds a unique code such as **1019**, for example, identifying the record. The dialing code field **502** holds a predetermined number pattern that the processor **202** of FIG. **7** uses at block **410** in FIG. **8**B to find the master list record having a dialing code matching the first few digits of the amended callee identifier stored in the callee id buffer **211**. The country code field **504** holds a number representing the country code associated with the record and the national sign number field **506** holds a number representing the area code associated with the record. (It will be observed that the dialing code is a combination of the contents of the country code field **504** and the national sign number field **506**.) The minimum length field **508** holds a number representing the minimum length of digits associated with the record and the maximum length field **51** holds a number representing the maximum number of digits in a number with which the record may be compared. The national dialled digit (NDD) field **512** holds a number representing an access code used to make a call within the country specified by the country code, and the international dialled digit (IDD) field **514** holds a number representing the international prefix needed to dial a call from the country indicated by the country code.

Thus, for example, a master list record may have a format as shown in FIG. **20** with exemplary field contents as shown.

Referring back to FIG. **8**B, using the country code and area code portions of the reformatted callee identifier stored in the callee id buffer **211**, block **410** directs the processor **202** of FIG. **7** to find a master list record such as the one shown in FIG. **20** having a dialing code that matches the country code (**1**) and area code (**604**) of the callee identifier. Thus, in this example, the processor (**202**) would find a master list record having an ID field containing the number **1019**. This number may be referred to as a route ID. Thus, a route ID number is found in the master list record associated with a predetermined number pattern in the reformatted callee identifier.

After executing block **410** in FIG. **8**B, the process continues as shown in FIG. **8**D. Referring to FIG. **8**D, block **412** directs the processor **202** of FIG. **7** to use the route ID number to search a database of supplier records associating supplier identifiers with route identifiers to locate at least one supplier record associated with the route identifier to identify at least one supplier operable to supply a communications link for the route.

Referring to FIG. **21**, a data structure for a supplier list record is shown. Supplier list records include a supplier ID field **540**, a master list ID field **542**, an optional prefix field **544**, a specific route identifier field **546**, a NDD/IDD rewrite field **548**, a rate field **550**, and a timeout field **551**. The supplier ID field **540** holds a code identifying the name of the supplier and the master list ID field **542** holds a code for associating the supplier record with a master list record. The prefix field **544** holds a string used to identify the supplier traffic and the specific route identifier field **546** holds an IP address of a gateway operated by the supplier indicated by the supplier ID field **540**. The NDD/IDD rewrite field **548** holds a code representing a rewritten value of the NDD/IDD associated with this route for this supplier, and the rate field **550** holds a code indicating the cost per second to the system operator to use the route provided by the gateway specified by the contents of the route identifier field **546**. The timeout field **551** holds a code indicating a time that the call controller should wait for a response from the associated gateway before giving up and trying the next gateway. This time value may be in seconds, for example. Exemplary supplier records are shown in FIGS. **22**, **23** and **24** for the exemplary suppliers shown at **20** in FIG. **1**, namely Telus, Shaw and Sprint.

Referring back to FIG. **8**D, at block **412** the processor **202** finds all supplier records that identify the master list ID found at block **410** of FIG. **8**B.

Referring back to FIG. **8**D, block **560** directs the processor **202** of FIG. **7** to begin to produce a routing message of the type shown in FIG. **15**. To do this, the processor **202** loads a routing message buffer as shown in FIG. **25** with a supplier prefix of the least costly supplier where the least costly supplier is determined from the rate fields **550** of FIG. **21** of the records associated with respective suppliers.

Referring to FIGS. **22**-**24**, in the embodiment shown, the supplier "Telus" has the lowest number in the rate field **550** and therefore the prefix **4973** associated with that supplier is loaded into the routing message buffer shown in FIG. **25** first.

Block **562** in FIG. **8**D directs the processor to delimit the prefix **4973** by the number sign (#) and to next load the reformatted callee identifier into the routing message buffer shown in FIG. **25**. At block **563** of FIG. **8**D, the contents of the route identifier field **546** of FIG. **21** of the record associated with the supplier "Telus" are added by the processor **202** of FIG. **7** to the routing message buffer shown in FIG. **25** after an @ sign delimiter, and then block **564** in FIG. **8**D directs the processor to get a time to live value, which in one embodiment may be 3600 seconds, for example. Block **566** then directs the processor **202** to load this time to live value and the timeout value (**551**) in FIG. **21** in the routing message buffer of FIG. **25**. Accordingly, a first part of the routing message for the Telus gateway is shown generally at **570** in FIG. **25**.

Referring back to FIG. **8**D, block **571** directs the processor **202** back to block **560** and causes it to repeat blocks **560**, **562**, **563**, **564** and **566** for each successive supplier until the routing message buffer is loaded with information pertaining to each supplier identified by the processor at block **412**. Thus, a second portion of the routing message as shown at **572** in FIG. **25** relates to the second supplier identified by the record shown in FIG. **23**. Referring back to FIG. **25**, a third portion of the routing message as shown at **574** and is associated with a third supplier as indicated by the supplier record shown in FIG. **24**.

Consequently, referring to FIG. **25**, the routing message buffer holds a routing message identifying a plurality of different suppliers able to provide gateways to the public telephone network (i.e. specific routes) to establish at least part of a communication link through which the caller may contact the callee. In this embodiment, each of the suppliers is identified, in succession, according to rate. Other criteria for determining the order in which suppliers are listed in the routing message may include preferred supplier priorities which may be established based on service agreements, for example.

Referring back to FIG. **8**D, block **568** directs the processor **202** of FIG. **7** to send the routing message shown in FIG. **25** to the call controller **14** in FIG. **1**.

META 1016
META V. VOIP-PAL

Subscriber to Subscriber Calls within the Same Node

Referring back to FIG. **8**A, if at block **280**, the callee identifier received in the RC request message has a prefix that identifies the same node as that associated with the caller, block **600** directs the processor **202** to use the callee identifier in the callee id buffer **211** to locate and retrieve a dialing profile for the callee. The dialing profile may be of the type shown in FIG. **11** or **12**, for example. Block **602** of FIG. **8**A then directs the processor **202** of FIG. **7** to get call block, call forward and voicemail records from the database **18** of FIG. **1** based on the user name identified in the callee dialing profile retrieved by the processor at block **600**. Call block, call forward and voicemail records may be as shown in FIGS. **26**, **27**, **28** and **30** for example.

Referring to FIG. **26**, the call block records include a user name field **604** and a block pattern field **606**. The user name field holds a user name corresponding to the user name in the user name field (**258** in FIG. **10**) of the callee profile and the block pattern field **606** holds one or more E.164-compatible numbers or user names identifying PSTN numbers or system subscribers from whom the subscriber identified in the user name field **604** does not wish to receive calls.

Referring to FIG. **8**A and FIG. **27**, block **608** directs the processor **202** of FIG. **7** to determine whether or not the caller identifier received in the RC request message matches a block pattern stored in the block pattern field **606** of the call block record associated with the callee identified by the contents of the user name field **604** in FIG. **26**. If the caller identifier matches a block pattern, block **610** directs the processor to send a drop call or non-completion message to the call controller (**14**) and the process is ended. If the caller identifier does not match a block pattern associated with the callee, block **609** directs the processor to store the username and domain of the callee, as determined from the callee dialing profile, and a time to live value in the routing message buffer as shown at **650** in FIG. **32**. Referring back to FIG. **8**A, block **612** then directs the processor **202** to determine whether or not call forwarding is required.

Referring to FIG. **28**, the call forwarding records include a user name field **614**, a destination number field **616**, and a sequence number field **618**. The user name field **614** stores a code representing a user with which the record is associated. The destination number field **616** holds a user name representing a number to which the current call should be forwarded, and the sequence number field **618** holds an integer number indicating the order in which the user name associated with the corresponding destination number field **616** should be attempted for call forwarding. The call forwarding table may have a plurality of records for a given user. The processor **202** of FIG. **7** uses the contents of the sequence number field **618** to place the records for a given user in order. As will be appreciated below, this enables the call forwarding numbers to be tried in an ordered sequence.

Referring to FIG. **8**A and FIG. **29**, if at block **612**, the call forwarding record for the callee identified by the callee identifier contains no contents in the destination number field **616** and accordingly no contents in the sequence number field **618**, there are no call forwarding entries for this callee, and the processor **202** is directed to block **620** in FIG. **8**C. If there are entries in the call forwarding table **27**, block **622** in FIG. **8**A directs the processor **202** to search the dialing profile table to find a dialing profile record as shown in FIG. **9**, for the user identified by the destination number field **616** of the call forward record shown in FIG. **28**. The processor **202** of FIG. **7** is further directed to store the username and domain for that user and a time to live value in the routing message buffer as shown at **652** in FIG. **32**, to produce a routing message as illustrated. This process is repeated for each call forwarding record associated with the callee identified by the callee id buffer **211** in FIG. **7** to add to the routing message buffer all call forwarding usernames and domains associated with the callee.

Referring back to FIG. **8**A, if at block **612** there are no call forwarding records, then at block **620** in FIG. **8**C the processor **202** is directed to determine whether or not the user identified by the callee identifier has paid for voicemail service. This is done by checking to see whether or not a flag is set in a voicemail record of the type shown in FIG. **30** in a voicemail table stored in the database **18** shown in FIG. **1**.

Referring to FIG. **30**, voicemail records in this embodiment may include a user name field **624**, a voicemail server field **626**, a seconds to voicemail field **628** and an enable field **630**. The user name field **624** stores the user name of the callee. The voicemail server field **626** holds a code identifying a domain name of a voicemail server associated with the user identified by the user name field **624**. The seconds to voicemail field **628** holds a code identifying the time to wait before engaging voicemail, and the enable field **630** holds a code representing whether or not voicemail is enabled for the user. Referring back to FIG. **8**C, at block **620** if the processor **202** of FIG. **7** finds a voicemail record as shown in FIG. **30** having user name field **624** contents matching the callee identifier, the processor is directed to examine the contents of the enabled field **630** to determine whether or not voicemail is enabled. If voicemail is enabled, then block **640** in FIG. **8**C directs the processor **202** to FIG. **7** to store the contents of the voicemail server field **626** and the contents of the seconds to voicemail field **628** in the routing message buffer, as shown at **654** in FIG. **32**. Block **642** then directs the processor **202** to get time to live values for each path specified by the routing message according to the cost of routing and the user's balance. These time to live values are then appended to corresponding paths already stored in the routing message buffer.

Referring back to FIG. **8**C, block **644** then directs the processor **202** of FIG. **7** to store the IP address of the current node in the routing message buffer as shown at **656** in FIG. **32**. Block **646** then directs the processor **202** to send the routing message shown in FIG. **32** to the call controller **14** in FIG. **1**. Thus in the embodiment described the routing controller will produce a routing message that will cause at least one of the following: forward the call to another party, block the call and direct the caller to a voicemail server.

Referring back to FIG. **1**, the routing message whether of the type shown in FIG. **16**, **25** or **32**, is received at the call controller **14** and the call controller interprets the receipt of the routing message as a request to establish a call.

Referring to FIG. **4**, the program memory **104** of the call controller **14** includes a routing to gateway routine depicted generally at **122**.

Where a routing message of the type shown in FIG. **32** is received by the call controller **14**, the routing to gateway routine **122** shown in FIG. **4** may direct the processor **102** cause a message to be sent back through the internet **13** shown in FIG. **1** to the callee telephone **15**, knowing the IP address of the callee telephone **15** from the user name.

Alternatively, if the routing message is of the type shown in FIG. **16**, which identifies a domain associated with another node in the system, the call controller may send a SIP invite message along the high speed backbone **17** connected to the other node. The other node functions as explained above, in response to receipt of a SIP invite message.

If the routing message is of the type shown in FIG. **25** where there are a plurality of gateway suppliers available, the call controller sends a SIP invite message to the first supplier,

META 1016
META V. VOIP-PAL

in this case Telus, using a dedicated line or an internet connection to determine whether or not Telus is able to handle the call. If the Telus gateway returns a message indicating it is not able to handle the call, the call controller **14** then proceeds to send a SIP invite message to the next supplier, in this case Shaw. The process is repeated until one of the suppliers responds indicating that it is available to carry the call. Once a supplier responds indicating that it is able to carry the call, the supplier sends back to the call controller **14** an IP address for a gateway provided by the supplier through which the call or audio path of the call will be carried. This IP address is sent in a message from the call controller **14** to the media relay **9** which responds with a message indicating an IP address to which the caller telephone should send its audio/video, traffic and an IP address to which the gateway should send its audio/video for the call. The call controller conveys the IP address at which the media relay expects to receive audio/video from the caller telephone, to the caller telephone **12** in a message. The caller telephone replies to the call controller with an IP address at which it would like to receive audio/video and the call controller conveys that IP address to the media relay. The call may then be conducted between the caller and callee through the media relay and gateway.

Referring back to FIG. **1**, if the call controller **14** receives a routing message of the type shown in FIG. **32**, and which has at least one call forwarding number and/or a voicemail number, the call controller attempts to establish a call to the callee telephone **15** by seeking from the callee telephone a message indicating an IP address to which the media relay should send audio/video. If no such message is received from the callee telephone, no call is established. If no call is established within a pre-determined time, the call controller **14** attempts to establish a call with the next user identified in the call routing message in the same manner. This process is repeated until all call forwarding possibilities have been exhausted, in which case the call controller communicates with the voicemail server **19** identified in the routing message to obtain an IP address to which the media relay should send audio/video and the remainder of the process mentioned above for establishing IP addresses at the media relay **9** and the caller telephone is carried out to establish audio/video paths to allowing the caller to leave a voicemail message with the voicemail server.

When an audio/video path through the media relay is established, a call timer maintained by the call controller **14** logs the start date and time of the call and logs the call ID and an identification of the route (i.e., audio/video path IP address) for later use in billing.

Time to Live

Referring to FIGS. **33**A and **33**B, a process for determining a time to live value for any of blocks **642** in FIG. **8**C, **350** in FIG. **8**A or **564** in FIG. **8**D above is described. The process is executed by the processor **202** shown in FIG. **7**. Generally, the process involves calculating a cost per unit time, calculating a first time value as a sum of a free time attributed to a participant in the communication session and the quotient of a funds balance held by the participant to the cost per unit time value and producing a second time value in response to the first time value and a billing pattern associated with the participant, the billing pattern including first and second billing intervals and the second time value being the time to permit a communication session to be conducted.

Referring to FIG. **33**A, in this embodiment, the process begins with a first block **700** that directs the RC processor to determine whether or not the call type set at block **302** in FIG. **8**A indicates the call is a network or cross-domain call. If the call is a network or cross-domain call, block **702** of FIG. **33**A directs the RC processor to set the time to live equal to 99999 and the process is ended. Thus, the network or cross-domain call type has a long time to live. If at block **700** the call type is determined not to be a network or cross-domain type, block **704** directs the RC processor to get a subscriber bundle table record from the database **18** in FIG. **1** and store it locally in the subscriber bundle record buffer at the RC **14**.

Referring to FIG. **34**, a subscriber bundle table record is shown generally at **706**. The record includes a user name field **708** and a services field **710**. The user name field **708** holds a code identifying the subscriber user name and the services field **710** holds codes identifying service features assigned to the subscriber, such as free local calling, call blocking and voicemail, for example.

FIG. **35** shows an exemplary subscriber bundle record for the Vancouver caller. In this record the user name field **708** is loaded with the user name 2001 1050 8667 and the services field **710** is loaded with codes **10**, **14** and **16** corresponding to free local calling, call blocking and voicemail, respectively. Thus, user 2001 1050 8667 has free local calling, call blocking and voicemail features.

Referring back to FIG. **33**A, after having loaded a subscriber bundle record into the subscriber bundle record buffer, block **712** directs the RC processor to search the database (**18**) determine whether or not there is a bundle override table record for the master list ID value that was determined at block **410** in FIG. **8**B. An exemplary bundle override table record is shown at **714** in FIG. **36**. The bundle table record includes a master list ID field **716**, an override type field **718**, an override value field **720** a first interval field **722** and a second interval field **724**. The master list ID field **716** holds a master list ID code. The override type field **718** holds an override type code indicating a fixed, percent or cent amount to indicate the amount by which a fee will be increased. The override value field **720** holds a real number representing the value of the override type. The first interval field **722** holds a value indicating the minimum number of seconds for a first level of charging and the second interval field **724** holds a number representing a second level of charging.

Referring to FIG. **37**, a bundle override record for the located master list ID code is shown generally at **726** and includes a master list ID field **716** holding the code **1019** which was the code located in block **410** of FIG. **8**B. The override type field **718** includes a code indicating the override type is a percentage value and the override value field **720** holds the value 10.0 indicating that the override will be 10.0% of the charged value. The first interval field **722** holds a value representing 30 seconds and the second interval field **724** holds a value representing 6 seconds. The 30 second value in the first interval field **722** indicates that charges for the route will be made at a first rate for 30 seconds and thereafter the charges will be made at a different rate in increments of 6 seconds, as indicated by the contents of the second interval field **724**.

Referring back to FIG. **33**A, if at block **712** the processor finds a bundle override record of the type shown in FIG. **37**, block **728** directs the processor to store the bundle override record in local memory. In the embodiment shown, the bundle override record shown in FIG. **37** is stored in the bundle override record buffer at the RC as shown in FIG. **7**. Still referring to FIG. **33**A, block **730** then directs the RC processor to determine whether or not the subscriber bundle table record **706** in FIG. **35** has a services field including a code identifying that the user is entitled to free local calling and also directs the processor to determine whether or not the call type is not a cross domain cell, i.e. it is a local or local/national style. If both of these conditions are satisfied, block **732**

META 1016
META V. VOIP-PAL

directs the processor to set the time to live equal to 99999, giving the user a long period of time for the call. The process is then ended. If the conditions associated with block **730** are not satisfied, block **734** of FIG. **33**B directs the RC processor to retrieve a subscriber account record associated with a participant in the call. This is done by copying and storing in the subscriber account record buffer a subscriber account record for the caller.

Referring to FIG. **38**, an exemplary subscriber account table record is shown generally at **736**. The record includes a user name field **738**, a funds balance field **740** and a free time field **742**. The user name field **738** holds a subscriber user name, the funds balance field **740** holds a real number representing the dollar value of credit available to the subscriber and the free time field **742** holds an integer representing the number of free seconds that the user is entitled to.

An exemplary subscriber account record for the Vancouver caller is shown generally at **744** in FIG. **39**, wherein the user name field **738** holds the user name 2001 1050 8667, the funds balance field **740** holds the value $10.00, and the free time field **742** holds the value 100. The funds balance field holding the value of $10.00 indicates the user has $10.00 worth of credit and the free time field having the value of 100 indicates that the user has a balance of 100 free seconds of call time.

Referring back to FIG. **33**B, after copying and storing the subscriber account record shown in FIG. **39** from the database to the subscriber account record buffer RC, block **746** directs the processor to determine whether or not the subscriber account record funds balance field **740** or free time field **742** are greater than zero. If they are not greater than zero, block **748** directs the processor to set the time to live equal to zero and the process is ended. The RC then sends a message back to the call controller to cause the call controller to deny the call to the caller. If the conditions associated with block **746** are satisfied, block **750** directs the processor to calculate the call cost per unit time. A procedure for calculating the call cost per unit time is described below in connection with FIG. **41**.

Assuming the procedure for calculating the cost per second returns a number representing the call cost per second, block **752** directs the processor **202** in FIG. **7** to determine whether or not the cost per second is equal to zero. If so, block **754** directs the processor to set the time to live to 99999 to give the caller a very long length of call and the process is ended.

If at block **752** the call cost per second is not equal to zero, block **756** directs the processor **202** in FIG. **7** to calculate a first time to live value as a sum of a free time attributed to the participant in the communication session and the quotient of the funds balance held by the participant to the cost per unit time value. To do this, the processor **202** of FIG. **7** is directed to set a first time value or temporary time to live value equal to the sum of the free time provided in the free time field **742** of the subscriber account record shown in FIG. **39** and the quotient of the contents of the funds balance field **740** in the subscriber account record for the call shown in FIG. **39** and the cost per second determined at block **750** of FIG. **33**B. Thus, for example, if at block **750** the cost per second is determined to be three cents per second and the funds balance field holds the value $10.00, the quotient of the funds balance and cost per second is 333 seconds and this is added to the contents of the free time field **742**, which is 100, resulting in a time to live of 433 seconds.

Block **758** then directs the RC processor to produce a second time value in response to the first time value and the billing pattern associated with the participant as established by the bundle override record shown in FIG. **37**. This process is shown in greater detail at **760** in FIG. **40** and generally involves producing a remainder value representing a portion of the second billing interval remaining after dividing the second billing interval into a difference between the first time value and the first billing interval.

Referring to FIG. **40**, the process for producing the second time value begins with a first block **762** that directs the processor **202** in FIG. **7** to set a remainder value equal to the difference between the time to live value calculated at block **756** in FIG. **33**B and the contents of the first interval field **722** of the record shown in FIG. **37**, multiplied by the modulus of the contents of the second interval field **724** of FIG. **37**. Thus, in the example given, the difference between the time to live field and the first interval field is 433 minus 30, which is 403 and therefore the remainder produced by the mod of 403 divided by 6 is 0.17. Block **764** then directs the processor to determine whether or not this remainder value is greater than zero and, if so, block **766** directs the processor to subtract the remainder from the first time value and set the difference as the second time value. To do this the processor is directed to set the time to live value equal to the current time to live of 403 minus the remainder of 1, i.e., 402 seconds. The processor is then returned back to block **758** of FIG. **33**B.

Referring back to FIG. **40**, if at block **764** the remainder is not greater than zero, block **768** directs the processor **202** of FIG. **7** to determine whether or not the time to live is less than the contents of the first interval field **722** in the record shown in FIG. **37**. If so, then block **770** of FIG. **40** directs the processor to set the time to live equal to zero. Thus, the second time value is set to zero when the remainder is greater than zero and the first time value is less than the free time associated with the participant in the call. If at block **768** the conditions of that block are not satisfied, the processor returns the first time to live value as the second time to live value.

Thus, referring to FIG. **33**B, after having produced a second time to live value, block **772** directs the processor to set the time to live value for use in blocks **342**, **350** or **564**.

Cost Per Second

Referring back to FIG. **33**B, at block **750** it was explained that a call cost per unit time is calculated. The following explains how that call cost per unit time value is calculated.

Referring to FIG. **41**, a process for calculating a cost per unit time is shown generally at **780**. The process is executed by the processor **202** in FIG. **7** and generally involves locating a record in a database, the record comprising a markup type indicator, a markup value and a billing pattern and setting a reseller rate equal to the sum of the markup value and the buffer rate, locating at least one of an override record specifying a route cost per unit time amount associated with a route associated with the communication session, a reseller record associated with a reseller of the communications session, the reseller record specifying a reseller cost per unit time associated with the reseller for the communication session and a default operator markup record specifying a default cost per unit time and setting as the cost per unit time the sum of the reseller rate and at least one of the route cost per unit time, the reseller cost per unit time and the default cost per unit time.

The process begins with a first set of blocks **782**, **802** and **820** which direct the processor **202** in FIG. **7** to locate at least one of a record associated with a reseller and a route associated with the reseller, a record associated with the reseller, and a default reseller mark-up record. Block **782**, in particular, directs the processor to address the database **18** to look for a record associated with a reseller and a route with the reseller by looking for a special rate record based on the master list ID established at block **410** in FIG. **8**C.

META 1016
META V. VOIP-PAL

Referring to FIG. **42**, a system operator special rate table record is shown generally at **784**. The record includes a reseller field **786**, a master list ID field **788**, a mark-up type field **790**, a mark-up value field **792**, a first interval field **794** and a second interval field **796**. The reseller field **786** holds a reseller ID code and the master list ID field **788** holds a master list ID code. The mark-up type field **790** holds a mark-up type such as fixed percent or cents and the mark-up value field **792** holds a real number representing the value corresponding to the mark-up type. The first interval field **794** holds a number representing a first level of charging and the second interval field **796** holds a number representing a second level of charging.

An exemplary system operator special rate table for a reseller known as "Klondike" is shown at **798** in FIG. **43**. In this record, the reseller field **786** holds a code indicating the retailer ID is Klondike, the master list ID field **788** holds the code **1019** to associate the record with the master list ID code **1019**. The mark-up type field **790** holds a code indicating the mark-up type is cents and the mark-up value field **792** holds a mark-up value indicating 1/10 of one cent. The first interval field **794** holds the value 30 and the second interval field **796** holds the value 6, these two fields indicating that the operator allows 30 seconds for free and then billing is done in increments of 6 seconds after that.

Referring back to FIG. **41**, if at block **782** a record such as the one shown in FIG. **43** is located in the system operator special rates table, the processor is directed to block **800** in FIG. **41**. If such a record is not found in the system operator special rates table, block **802** directs the processor to address the database **18** to look in a system operator mark-up table for a mark-up record associated with the reseller.

Referring to FIG. **44**, an exemplary system operator mark-up table record is shown generally at **804**. The record includes a reseller field **806**, a mark-up type field **808**, a mark-up value field **810**, a first interval field **812** and a second interval field **814**. The reseller mark-up type, mark-up value, first interval and second interval fields are as described in connection with the fields by the same names in the system operator special rates table shown in FIG. **42**.

FIG. **45** provides an exemplary system operator mark-up table record for the reseller known as Klondike and therefore the reseller field **806** holds the value "Klondike", the mark-up type field **808** holds the value cents, the mark-up value field holds the value 0.01, the first interval field **812** holds the value 30 and the second interval field **814** holds the value 6. This indicates that the reseller "Klondike" charges by the cent at a rate of one cent per minute. The first 30 seconds of the call are free and billing is charged at the rate of one cent per minute in increments of 6 seconds.

FIG. **46** provides an exemplary system operator mark-up table record for cases where no specific system operator mark-up table record exists for a particular reseller, i.e., a default reseller mark-up record. This record is similar to the record shown in FIG. **45** and the reseller field **806** holds the value "all", the mark-up type field **808** is loaded with a code indicating mark-up is based on a percentage, the mark-up value field **810** holds the percentage by which the cost is marked up, and the first and second interval fields **812** and **814** identify first and second billing levels.

Referring back to FIG. **41**, if at block **802** a specific mark-up record for the reseller identified at block **782** is not located, block **820** directs the processor to get the mark-up record shown in FIG. **46**, having the "all" code in the reseller field **806**. The processor is then directed to block **800**.

Referring back to FIG. **41**, at block **800**, the processor **202** of FIG. **7** is directed to set a reseller rate equal to the sum of the mark-up value of the record located by blocks **782**, **802** or **820** and the buffer rate specified by the contents of the buffer rate field **516** of the master list record shown in FIG. **20**. To do this, the RC processor sets a variable entitled "reseller cost per second" to a value equal to the sum of the contents of the mark-up value field (**792**, **810**) of the associated record, plus the contents of the buffer rate field (**516**) from the master list record associated with the master list ID. Then, block **822** directs the processor to set a system operator cost per second variable equal to the contents of the buffer rate field (**516**) from the master list record. Block **824** then directs the processor to determine whether the call type flag indicates the call is local or national/local style and whether the caller has free local calling. If both these conditions are met, then block **826** sets the user cost per second variable equal to zero and sets two increment variables equal to one, for use in later processing. The cost per second has thus be calculated and the process shown in FIG. **41** is ended.

If at block **824** the conditions of that block are not met, the processor **202** of FIG. **7** is directed to locate at least one of a bundle override table record specifying a route cost per unit time associated with a route associated with the communication session, a reseller special destinations table record associated with a reseller of the communications session, the reseller record specifying a reseller cost per unit time associated with the reseller for the communication session and a default reseller global markup record specifying a default cost per unit time.

To do this block **828** directs the processor **202** of FIG. **7** to determine whether or not the bundle override record **726** in FIG. **37** located at block **712** in FIG. **33**A has a master list ID equal to the stored master list ID that was determined at block **410** in FIG. **8**B. If not, block **830** directs the processor to find a reseller special destinations table record in a reseller special destinations table in the database (**18**), having a master list ID code equal to the master list ID code of the master list ID that was determined at block **410** in FIG. **8**B. An exemplary reseller special destinations table record is shown in FIG. **47** at **832**. The reseller special destinations table record includes a reseller field **834**, a master list ID field **836**, a mark-up type field **838**, a mark-up value field **840**, a first interval field **842** and a second interval field **844**. This record has the same format as the system operator special rates table record shown in FIG. **42**, but is stored in a different table to allow for different mark-up types and values and time intervals to be set according to resellers' preferences. Thus, for example, an exemplary reseller special destinations table record for the reseller "Klondike" is shown at **846** in FIG. **48**. The reseller field **834** holds a value indicating the reseller as the reseller "Klondike" and the master list ID field holds the code **1019**. The mark-up type field **838** holds a code indicating the mark-up type is percent and the mark-up value field **840** holds a number representing the mark-up value as 5%. The first and second interval fields identify different billing levels used as described earlier.

Referring back to FIG. **41**, the record shown in FIG. **48** may be located at block **830**, for example. If at block **830** such a record is not found, then block **832** directs the processor to get a default operator global mark-up record based on the reseller ID.

Referring to FIG. **49**, an exemplary default reseller global mark-up table record is shown generally at **848**. This record includes a reseller field **850**, a mark-up type field **852**, a mark-up value field **854**, a first interval field **856** and a second interval field **858**. The reseller field **850** holds a code identifying the reseller. The mark-up type field **852**, the mark-up value field **854** and the first and second interval fields **856** and

META 1016
META V. VOIP-PAL

858 are of the same type as described in connection with fields of the same name in FIG. 47, for example. The contents of the fields of this record 860 may be set according to system operator preferences, for example.

Referring to FIG. 50, an exemplary reseller global mark-up table record is shown generally at 860. In this record, the reseller field 850 holds a code indicating the reseller is "Klondike", the mark-up type field 852 holds a code indicating the mark-up type is percent, the mark-up value field 854 holds a value representing 10% as the mark-up value, the first interval field 856 holds the value 30 and the second interval field 858 holds the values 30 and 6 respectively to indicate the first 30 seconds are free and billing is to be done in 6 second increments after that.

Referring back to FIG. 41, should the processor get to block 832, the reseller global mark-up table record as shown in FIG. 50 is retrieved from the database and stored locally at the RC. As seen in FIG. 41, it will be appreciated that if the conditions are met in blocks 828 or 830, or if the processor executes block 832, the processor is then directed to block 862 which causes it to set an override value equal to the contents of the mark-up value field of the located record, to set the first increment variable equal to the contents of the first interval field of the located record and to set the second increment variable equal to the contents of the second interval field of the located record. (The increment variables were alternatively set to specific values at block 826 in FIG. 41.)

It will be appreciated that the located record could be a bundle override record of the type shown in FIG. 37 or the located record could be a reseller special destination record of the type shown in FIG. 48 or the record could be a reseller global mark-up table record of the type shown in FIG. 50. After the override and first and second increment variables have been set at block 862, the processor 202 if FIG. 7 is directed to set as the cost per unit time the sum of the reseller rate and at least one of the route cost per unit time, the reseller cost per unit time and the default cost per unit time, depending on which record was located. To do this, block 864 directs the processor to set the cost per unit time equal to the sum of the reseller cost set at block 800 in FIG. 41, plus the contents of the override variable calculated in block 862 in FIG. 41. The cost per unit time has thus been calculated and it is this cost per unit time that is used in block 752 of FIG. 33B, for example.

Terminating the Call

In the event that either the caller or the callee terminates a call, the telephone of the terminating party sends a SIP bye message to the controller 14. An exemplary SIP bye message is shown at 900 in FIG. 51 and includes a caller field 902, a callee field 904 and a call ID field 906. The caller field 902 holds a twelve digit user name, the callee field 904 holds a PSTN compatible number or user name, and the call ID field 906 holds a unique call identifier field of the type shown in the call ID field 65 of the SIP invite message shown in FIG. 3.

Thus, for example, referring to FIG. 52, a SIP bye message for the Calgary callee is shown generally at 908 and the caller field 902 holds a user name identifying the caller, in this case 2001 1050 8667, the callee field 904 holds a user name identifying the Calgary callee, in this case 2001 1050 2222, and the call ID field 906 holds the code FA10 @ 192.168.0.20, which is the call ID for the call.

The SIP bye message shown in FIG. 52 is received at the call controller 14 and the call controller executes a process as shown generally at 910 in FIG. 53. The process includes a first block 912 that directs the call controller processor 202 of FIG. 7 to copy the caller, callee and call ID field contents from the SIP bye message received from the terminating party to corresponding fields of an RC stop message buffer (not shown). Block 914 then directs the processor to copy the call start time from the call timer and to obtain a call stop time from the call timer. Block 916 then directs the call controller to calculate a communication session time by determining the difference in time between the call start time and the call stop time. This session time is then stored in a corresponding field of the RC call stop message buffer. Block 917 then directs the processor to decrement the contents of the current concurrent call field 277 of the dialing profile for the caller as shown in FIG. 10, to indicate that there is one less concurrent call in progress. A copy of the amended dialing profile for the caller is then stored in the database 18 of FIG. 1. Block 918 then directs the processor to copy the route from the call log. An RC call stop message produced as described above is shown generally at 1000 in FIG. 54. An RC call stop message specifically associated with the call made to the Calgary callee is shown generally at 1020 in FIG. 55.

Referring to FIG. 54, the RC stop call message includes a caller field 1002, callee field 1004, a call ID field 1006, an account start time field 1008, an account stop time field 1010, a communication session time 1012 and a route field 1014. The caller field 1002 holds a username, the callee field 1004 holds a PSTN-compatible number or system number, the call ID field 1006 hold the unique call identifier received from the SIP invite message shown in FIG. 3, the account start time field 1008 holds the date and start time of the call, the account stop time field 1010 holds the date and time the call ended, the communication session time field 1012 holds a value representing the difference between the start time and the stop time, in seconds, and the route field 1014 holds the IP address for the communications link that was established.

Referring to FIG. 55, an exemplary RC stop call message for the Calgary callee is shown generally at 1020. In this example the caller field 1002 holds the user name 2001 1050 8667 identifying the Vancouver-based caller and the callee field 1004 holds the user name 2001 1050 2222 identifying the Calgary callee. The contents of the call ID field 1006 are FA10 @ 192.168.0.20. The contents of the account start time field 1008 are 2006-12-30 12:12:12 and the contents of the account stop time field are 2006-12-30 12:12:14. The contents of the communication session time field 1012 are 2 to indicate 2 seconds call duration and the contents of the route field are 72.64.39.58.

Referring back to FIG. 53, after having produced an RC call stop message, block 920 directs the processor 202 in FIG. 7 to send the RC stop message compiled in the RC call stop message buffer to the RC 16 of FIG. 1. Block 922 directs the call controller 14 to send a "bye" message back to the party that did not terminate the call.

The RC 16 of FIG. 1 receives the call stop message and an RC call stop message process is invoked at the RC, the process being shown at 950 in FIGS. 56A, 56B and 56C. Referring to FIG. 56A, the RC stop message process 950 begins with a first block 952 that directs the processor 202 in FIG. 7 to determine whether or not the communication session time is less than or equal to the first increment value set by the cost calculation routine shown in FIG. 41, specifically blocks 826 or 862 thereof. If this condition is met, then block 954 of FIG. 56A directs the RC processor to set a chargeable time variable equal to the first increment value set at block 826 or 862 of FIG. 41. If at block 952 of FIG. 56A the condition is not met, block 956 directs the RC processor to set a remainder variable equal to the difference between the communication session time and the first increment value mod the second increment value produced at block 826 or 862 of FIG. 41. Then, the processor is directed to block 958 of FIG. 56A which directs

META 1016
META V. VOIP-PAL

it to determine whether or not the remainder is greater than zero. If so, block **960** directs the RC processor to set the chargeable time variable equal to the difference between the communication session time and the remainder value. If at block **958** the remainder is not greater than zero, block **962** directs the RC processor to set the chargeable time variable equal to the contents of the communication session time from the RC stop message. The processor is then directed to block **964**. In addition, after executing block **954** or block **960**, the processor is directed to block **964**.

Block **964** directs the processor **202** of FIG. **7** to determine whether or not the chargeable time variable is greater than or equal to the free time balance as determined from the free time field **742** of the subscriber account record shown in FIG. **39**. If this condition is satisfied, block **966** of FIG. **56**A directs the processor to set the free time field **742** in the record shown in FIG. **39**, to zero. If the chargeable time variable is not greater than or equal to the free time balance, block **968** directs the RC processor to set a user cost variable to zero and Block **970** then decrements the free time field **742** of the subscriber account record for the caller by the chargeable time amount determined by block **954**, **960** or **962**.

If at Block **964** the processor **202** of FIG. **7** was directed to Block **966** which causes the free time field (**742** of FIG. **39**) to be set to zero, referring to FIG. **56**B, Block **972** directs the processor to set a remaining chargeable time variable equal to the difference between the chargeable time and the contents of the free time field (**742** of FIG. **39**). Block **974** then directs the processor to set the user cost variable equal to the product of the remaining chargeable time and the cost per second calculated at Block **750** in FIG. **33**B. Block **976** then directs the processor to decrement the funds balance field (**740**) of the subscriber account record shown in FIG. **39** by the contents of the user cost variable calculated at Block **974**.

After completing Block **976** or after completing Block **970** in FIG. **56**A, block **978** of FIG. **56**B directs the processor **202** of FIG. **7** to calculate a reseller cost variable as the product of the reseller rate as indicated in the mark-up value field **810** of the system operator mark-up table record shown in FIG. **45** and the communication session time determined at Block **916** in FIG. **53**. Then, Block **980** of FIG. **56**B directs the processor to add the reseller cost to the reseller balance field **986** of a reseller account record of the type shown in FIG. **57** at **982**.

The reseller account record includes a reseller ID field **984** and the aforementioned reseller balance field **986**. The reseller ID field **984** holds a reseller ID code, and the reseller balance field **986** holds an accumulated balance of charges.

Referring to FIG. **58**, a specific reseller accounts record for the reseller "Klondike" is shown generally at **988**. In this record the reseller ID field **984** holds a code representing the reseller "Klondike" and the reseller balance field **986** holds a balance of $100.02. Thus, the contents of the reseller balance field **986** in FIG. **58** are incremented by the reseller cost calculated at block **978** of FIG. **56**B.

Still referring to FIG. **56**B, after adding the reseller cost to the reseller balance field as indicated by Block **980**, Block **990** directs the processor to **202** of FIG. **7** calculate a system operator cost as the product of the system operator cost per second, as set at block **822** in FIG. **41**, and the communication session time as determined at Block **916** in FIG. **53**. Block **992** then directs the processor to add the system operator cost value calculated at Block **990** to a system operator accounts table record of the type shown at **994** in FIG. **59**. This record includes a system operator balance field **996** holding an accumulated charges balance. Referring to FIG. **60** in the embodiment described, the system operator balance field **996** may hold the value $1,000.02 for example, and to this value the system operator cost calculated at Block **990** is added when the processor executes Block **992** of FIG. **56**B.

Ultimately, the final reseller balance **986** in FIG. **58** holds a number representing an amount owed to the reseller by the system operator and the system operator balance **996** of FIG. **59** holds a number representing an amount of profit for the system operator.

While specific embodiments of the invention have been described and illustrated, such embodiments should be considered illustrative of the invention only and not as limiting the invention as construed in accordance with the accompanying claims.

What is claimed is:

1. A process for operating a call routing controller to facilitate communication between callers and callees in a system comprising a plurality of nodes with which callers and callees are associated, the process comprising:

in response to initiation of a call by a calling subscriber, receiving a caller identifier and a callee identifier;

locating a caller dialing profile comprising a username associated with the caller and a plurality of calling attributes associated with the caller;

determining a match when at least one of said calling attributes matches at least a portion of said callee identifier;

classifying the call as a public network call when said match meets public network classification criteria and classifying the call as a private network call when said match meets private network classification criteria;

when the call is classified as a private network call, producing a private network routing message for receipt by a call controller, said private network routing message identifying an address, on the private network, associated with the callee;

when the call is classified as a public network call, producing a public network routing message for receipt by the call controller, said public network routing message identifying a gateway to the public network.

2. The process of claim **1** further comprising receiving a request to establish a call, from a call controller in communication with a caller identified by said callee identifier.

3. The process of claim **1** wherein determining said match comprises determining said match when said callee identifier includes a portion that matches an International Dialing Digit (IDD) associated with said caller dialing profile.

4. The process of claim **1** wherein determining said match comprises determining said match when said callee identifier includes a portion that matches a National Dialing Digit (NDD) associated with said caller dialing profile.

5. The process of claim **1** wherein determining said match comprises determining said match when said callee identifier includes a portion that matches an area code associated with said caller dialing profile.

6. The process of claim **1** wherein determining said match comprises determining said match when said callee identifier has a length within a range specified in said caller dialing profile.

7. The process of claim **1** further comprising formatting said callee identifier into a pre-defined digit format to produce a re-formatted callee identifier.

8. The process of claim **7** wherein formatting comprises removing an international dialing digit from said callee identifier, when said callee identifier begins with a digit matching an international dialing digit specified by said caller dialing profile associated with said caller.

9. The process of claim **7** wherein formatting comprises removing a national dialing digit from said callee identifier

META 1016
META V. VOIP-PAL

and prepending a caller country code to said callee identifier when said callee identifier begins with a national dialing digit.

10. The process of claim **7** wherein formatting comprises prepending a caller country code to said callee identifier when said callee identifier begins with digits identifying an area code specified by said caller dialing profile.

11. The process of claim **7** wherein formatting comprises prepending a caller country code and area code to said callee identifier when said callee identifier has a length that matches a caller dialing number format specified by said caller dialing profile and only one area code is specified as being associated with said caller in said caller dialing profile.

12. The process of claim **7** wherein classifying comprises classifying said call as a private network call when said re-formatted callee identifier identifies a subscriber to the private network.

13. The process of claim **7** wherein classifying comprises determining whether said callee identifier complies with a pre-defined username format and, if so, classifying the call as a private network call.

14. The process of claim **7** further comprising, causing a database of records to be searched to locate a Direct-Inward-Dial (DID) bank table record associating a public telephone number with said reformatted callee identifier and if said DID bank table record is found, classifying the call as a private network call and if a DID bank table record is not found classifying the call as a public network call.

15. The process of claim **14** wherein producing said private network routing message identifying a node on the private network comprises setting a callee identifier in response to a username associated with said DID bank table record.

16. The process of claim **15** wherein producing said private network routing message comprises determining whether a node associated with the reformatted callee identifier is the same as a node associated the caller identifier.

17. The process of claim **16** wherein determining whether a node associated with the reformatted callee identifier is the same as a node associated with the caller identifier comprises determining whether a prefix of said re-formatted callee identifier matches a corresponding prefix of a username associated with said caller dialing profile.

18. The process of claim **17** wherein when said node associated with said caller is not the same as the node associated with the callee, producing a routing message including said caller identifier, said reformatted callee identifier and an identification of a private network node associated with said callee and communicating said routing message to a call controller.

19. The process of claim **16** wherein when said node associated with said caller identifier is the same as the node associated with said callee identifier, determining whether to perform at least one of the following: forward said call to another party, block the call and direct the caller to a voicemail server associated with the callee.

20. The process of claim **19** wherein producing said private network routing message comprises producing a routing message having an identification of at least one of the callee identifier, an identification of a party to whom the call should be forwarded and an identification of a voicemail server associated with the callee.

21. The process of claim **20** further comprising communicating said routing message to a call controller.

22. The process of claim **7** wherein producing said public network routing message identifying a gateway to the public network comprises searching a database of route records associating route identifiers with dialing codes to find a route record having a dialing code having a number pattern matching at least a portion of said reformatted callee identifier.

23. The process of claim **22** further comprising searching a database of supplier records associating supplier identifiers with said route identifiers to locate at least one supplier record associated with said route identifier associated with said route record having a dialing code having a number pattern matching at least a portion of said reformatted callee identifier.

24. The process of claim **23** further comprising loading a routing message buffer with the reformatted callee identifier and an identification of specific routes associated respective ones of the supplier records associated with said route record and loading said routing message buffer with a time value and a timeout value.

25. The process of claim **24** wherein said public network routing message comprises the contents of said routing message buffer and wherein said process comprises communicating said public network routing message to a call controller.

26. The process of claim **1** further comprising causing said dialing profile to include a maximum concurrent call value and a concurrent call count value and causing said concurrent call count value to be incremented when the user associated with said dialing profile initiates a call and causing said concurrent call count value to be decremented when a call with said user associated with said dialing profile is ended.

27. A non-transitory computer readable medium encoded with codes for directing a processor to execute a method of operating a call routing controller to facilitate communication between callers and callees in a system comprising a plurality of nodes with which callers and callees are associated, the method comprising:

in response to initiation of a call by a calling subscriber, receiving a caller identifier and a callee identifier;

locating a caller dialing profile comprising a username associated with the caller and a plurality of calling attributes associated with the caller;

determining a match when at least one of said calling attributes matches at least a portion of said callee identifier;

classifying the call as a public network call when said match meets public network classification criteria and classifying the call as a private network call when said match meets private network classification criteria;

when the call is classified as a private network call, producing a private network routing message for receipt by a call controller, said private network routing message identifying an address, on the private network, associated with the callee; and

when the call is classified as a public network call, producing a public network routing message for receipt by a call controller, said public network routing message identifying a gateway to the public network.

28. A call routing apparatus for facilitating communications between callers and callees in a system comprising a plurality of nodes with which callers and callees are associated, the apparatus comprising:

receiving means for receiving a caller identifier and a callee identifier, in response to initiation of a call by a calling subscriber;

means for locating a caller dialing profile comprising a username associated with the caller and a plurality of calling attributes associated with the caller;

means for determining a match when at least one of said calling attributes matches at least a portion of said callee identifier;

means for classifying the call as a public network call when said match meets public network classification criteria;

means for classifying the call as a private network call when said match meets private network classification criteria;

means for producing a private network routing message for receipt by a call controller, when the call is classified as a private network call, said private network routing message identifying an address, on the private network, associated with the callee; and

means for producing a public network routing message for receipt by a call controller, when the call is classified as a public network call, said public network routing message identifying a gateway to the public network.

29. The apparatus of claim **28** wherein said receiving means is operably configured to receive a request to establish a call, from a call controller in communication with a caller identified by said callee identifier.

30. The apparatus of claim **28** wherein said calling attributes include an international dialing digit and wherein said means for determining is operably configured to determine whether said callee identifier includes a portion that matches an International Dialing Digit (IDD) associated with said caller dialing profile.

31. The apparatus of claim **28** wherein said calling attributes include a national dialing digit and wherein said means for determining is operably configured to determine whether said callee identifier includes a portion that matches a National Dialing Digit (NDD) associated with said caller dialing profile.

32. The apparatus of claim **28** wherein said calling attributes include an area code and wherein said means for determining is operably configured to determine whether said callee identifier includes a portion that matches an area code associated with said caller dialing profile.

33. The apparatus of claim **28** wherein said calling attribute includes a number length range and wherein said means for determining is operably configured to determine whether said callee identifier has a length within a range specified in said caller dialing profile.

34. The apparatus of claim **28** further comprising formatting means for formatting said callee identifier into a predefined digit format to produce a re-formatted callee identifier.

35. The apparatus of claim **34** wherein said formatting means is operably configured to remove an international dialing digit from said callee identifier, when said callee identifier begins with a digit matching an international dialing digit specified by said caller dialing profile associated with said caller.

36. The apparatus of claim **34** wherein said formatting means is operably configured to remove a national dialing digit from said callee identifier and prepend a caller country code to said callee identifier when said callee identifier begins with a national dialing digit.

37. The apparatus of claim **34** wherein said formatting means is operably configured to prepend a caller country code to said callee identifier when said callee identifier begins with digits identifying an area code specified by said caller dialing profile.

38. The apparatus of claim **34** wherein said formatting means is operably configured to prepend a caller country code and area code to said callee identifier when said callee identifier has a length that matches a caller dialing number format specified by said caller dialing profile and only one area code is specified as being associated with said caller in said caller dialing profile.

39. The apparatus of claim **34** wherein said means for classifying the call as a private network call is operably configured to classify said call as a private network call when said re-formatted callee identifier identifies a subscriber to the private network.

40. The apparatus of claim **34** wherein said means for classifying the call as a private network call is operably configured to classify the call as a private network call when said callee identifier complies with a pre-defined username format.

41. The apparatus of claim **34** further comprising searching means for searching a database of records to locate a Direct-Inward-Dial (DID) bank table record associating a public telephone number with said reformatted callee identifier and wherein said means for classifying the call as a private network call is operably configured to classify the call as a private network call when said DID bank table record is found and said means for classifying the call as a public network call is operably configured to classify the call as a public network call when a DID bank table record is not found.

42. The apparatus of claim **41** wherein said private network routing message producing means is operably configured to produce a routing message having a callee identifier set according to a username associated with said DID bank table record.

43. The apparatus of claim **42** wherein said private network routing message producing means is operably configured to determine whether a node associated with the reformatted callee identifier is the same as a node associated the caller identifier.

44. The apparatus of claim **43** wherein said private network routing means includes means for determining whether a prefix of said re-formatted callee identifier matches a corresponding prefix of a username associated with said caller dialing profile.

45. The apparatus of claim **44** wherein said private network routing message producing means is operably configured to produce a routing message including said caller identifier, said reformatted callee identifier and an identification of a private network node associated with said callee and to communicate said routing message to a call controller.

46. The apparatus of claim **43** wherein said private network routing message producing means is operably configured to perform at least one of the following: forward said call to another party, block the call and direct the caller to a voicemail server associated with the callee identifier, when said node associated with said caller identifier is the same as the node associated with said callee identifier.

47. The apparatus of claim **46** wherein said means for producing said private network routing message is operably configured to produce a routing message having an identification of at least one of the callee identifier, an identification of a party to whom the call should be forwarded and an identification of a voicemail server associated with the callee.

48. The apparatus of claim **47** further comprising means for communicating said routing message to a call controller.

49. The apparatus of claim **34** wherein said means for producing said public network routing message identifying a gateway to the public network comprises means for searching a database of route records associating route identifiers with dialing codes to find a route record having a dialing code having a number pattern matching at least a portion of said reformatted callee identifier.

50. The apparatus of claim **49** further comprising means for searching a database of supplier records associating supplier identifiers with said route identifiers to locate at least one supplier record associated with said route identifier associ-

ated with said route record having a dialing code having a number pattern matching at least a portion of said reformatted callee identifier.

51. The apparatus of claim **50** further comprising a routing message buffer and means for loading said routing message buffer with the reformatted callee identifier and an identification of specific routes associated respective ones of the supplier records associated with said route record and loading said routing message buffer with a time value and a timeout value.

52. The apparatus of claim **51** further comprising means for causing said public network routing message to include the contents of said routing message buffer and means for communicating the public network routing message to a call controller.

53. The apparatus of claim **28** further comprising means for causing said dialing profile to include a maximum concurrent call value and a concurrent call count value and for causing said concurrent call count value to be incremented when the user associated with said dialing profile initiates a call and for causing said concurrent call count value to be decremented when a call with said user associated with said dialing profile is ended.

54. A process for operating a call routing controller to establish a call between a caller and a callee in a communication system, the process comprising:

in response to initiation of a call by a calling subscriber, locating a caller dialing profile comprising a plurality of calling attributes associated with the caller; and

when at least one of said calling attributes and at least a portion of a callee identifier associated with the callee match and when the match meets a private network classification criterion, producing a private network routing message for receipt by a call controller, said private network routing message identifying an address, on a private network, the address being associated with the callee; and

when at least one of said calling attributes and said at least said portion of said callee identifier associated with the callee match and when the match meets a public network classification criterion, producing a public network routing message for receipt by a call controller, said public network routing message identifying a gateway to a public network.

55. The process of claim **54** wherein said private network classification criteria include:

a) said callee identifier does not begin with the same digit pattern as an international dialing digit (IDD) attribute of said callee identifier; and

b) said callee identifier does not begin with the same digit pattern as a national dialing digit (NDD) attribute of said callee identifier; and

c) said callee identifier does not begin with the same area code as an area code of said caller; and

d) said callee identifier does not have a length that is within a range of caller local number lengths; and

e) said callee identifier is a valid username.

56. The process of claim **55** further comprising identifying the call as a cross-domain call on the private network when said callee identifier identifies a callee that is not associated with the same network node as said caller.

57. The process of claim **55** further comprising:

locating a callee dialing profile for the callee when said callee identifier identifies a callee that is associated with the same network node as said caller; and

retrieving call handling information associated with the callee, where said call handing information is available, said call handing information including at least one of call blocking information, call forwarding information, and voicemail information.

58. The process of claim **57** further comprising, where said call handling information including said call blocking information is available, blocking the call when said call blocking information identifies the caller as a caller from whom calls are to be blocked from being established with the callee.

59. The process of claim **57** further comprising, where said call handling information including said call forwarding information is available, causing said call forwarding information to be included in said private network routing message.

60. The process of claim **57** further comprising, where said call handling information including said voicemail information is available, causing said voicemail information to be included in said private network routing message.

61. The process of claim **54** further comprising associating at least one direct inward dial record with at least one subscriber to said communication system, each of said at least one direct inward dial records comprising a field storing a direct inward dial number associated with said at least one subscriber.

62. The process of claim **61** wherein said public network classification criteria include:

a) said callee identifier begins with the same digit pattern as an international dialing digit (IDD) attribute of said callee identifier; and

b) a reformatted callee identifier produced by removing the IDD attribute from said callee identifier has no DID bank table record.

63. The process of claim **61** wherein said public network classification criteria include:

a) said callee identifier begins with the same digit pattern as a national dialing digit (NDD) attribute of said callee identifier; and

b) a reformatted callee identifier produced by removing the NDD attribute from said callee identifier and including a caller country code has no DID bank table record.

64. The process of claim **61** wherein said public network classification criteria include:

a) said callee identifier begins with the same area code as an area code of said caller; and

b) a reformatted callee identifier produced by reformatting the callee identifier to include a caller country code has no DID bank table record.

65. The process of claim **61** wherein said public network classification criteria include:

a) said callee identifier has a length that is within a range of caller local number lengths; and

b) a reformatted callee identifier produced by reformatting the callee identifier to include a caller country code and area code has no DID bank table record.

66. The process of claim **54** wherein said plurality of calling attributes includes at least one of an international dialing digits field, a national dialing digits field, a country code field, a local area codes field, a caller minimum local length field, a caller maximum local length field, a reseller field, a maximum number of concurrent calls field and a current number of concurrent calls field.

67. The process of claim **61** wherein said DID record comprises a user name field, a user domain field and a DID number field.

68. The process of claim **54** further comprising maintaining a list of public network route suppliers and when said public network classification criterion is met identifying at

least one of said public network route suppliers that satisfies public network routing selection criteria.

69. The process of claim **68** wherein said producing said public network routing message comprises producing a public network routing message identifying said at least one public network route supplier that satisfies said public network routing selection criteria.

70. The process of claim **69** wherein producing said public network routing message comprises causing said at least one public network route supplier that satisfies said public network routing selection criteria to be placed in a preferred order.

71. The process of claim **70** wherein said preferred order is by at least one of rate and preferred service agreements with said at least one public network route supplier.

72. The process of claim **54** further comprising causing the private network routing message or the public network routing message to be communicated to a call controller to effect routing of the call.

73. A non-transitory computer readable medium encoded with codes for directing a processor to execute the method of claim **54**.

74. A call routing controller apparatus for establishing a call between a caller and a callee in a communication system, the apparatus comprising:

a processor operably configured to:

access a database of caller dialing profiles wherein each dialing profile associates a plurality of calling attributes with a respective subscriber, to locate a dialing profile associated with the caller, in response to initiation of a call by a calling subscriber; and

produce a private network routing message for receipt by a call controller, said private network routing message identifying an address, on a private network, through which the call is to be routed, when at least one of said calling attributes and at least a portion of a callee identifier associated with the callee match and when the match meets a private network classification criterion, the address being associated with the callee; and

produce a public network routing message for receipt by a call controller, said public network routing message identifying a gateway to a public network, when at least one of said calling attributes and said at least said portion of said callee identifier associated with the callee match and when the match meets a public network classification criterion.

75. The apparatus of claim **74** wherein said private network classification criteria include:

a) said callee identifier does not begin with the same digit pattern as an international dialing digit (IDD) attribute of said callee identifier; and

b) said callee identifier does not begin with the same digit pattern as a national dialing digit (NDD) attribute of said callee identifier; and

c) said callee identifier does not begin with the same area code as an area code of said caller; and

d) said callee identifier does not have a length that is within a range of caller local number lengths; and

e) said callee identifier is a valid username.

76. The apparatus of claim **75** wherein said processor is further operably configured to identify the call as a cross-domain call on the private network when said callee identifier identifies a callee that is not associated with the same network node as said caller.

77. The apparatus of claim **75** wherein said processor is further configured to:

access the database of caller dialing profiles to locate a callee dialing profile for the callee when said callee identifier identifies a callee that is associated with the same network node as said caller; and

retrieve call handling information associated with the callee, where said call handing information is available, said call handing information including at least one of call blocking information, call forwarding information, and voicemail information.

78. The apparatus of claim **77** wherein said processor is further operably configured to determine whether said call handling information including said call blocking information is available and to block the call when said call blocking information identifies the caller as a caller from whom calls are to be blocked.

79. The apparatus of claim **77** wherein said processor is further operably configured to determine whether said call handling information including said call forwarding information is available and to cause said call forwarding information to be included in said private network routing message.

80. The apparatus of claim **77** wherein said processor is further operably configured to determine whether said call handling information including said voicemail information is available and to cause said voicemail information to be included in said private network routing message.

81. The apparatus of claim **74** wherein said processor is further operably configured to access a database of direct inward dial records each associating at least one direct inward dial number with at least one subscriber to said communication system.

82. The apparatus of claim **81** wherein said public network classification criteria include:

a) said callee identifier begins with the same digit pattern as an international dialing digit (IDD) attribute of said callee identifier; and

b) a reformatted callee identifier produced by removing the IDD attribute from said callee identifier has no DID record.

83. The apparatus of claim **81** wherein said public network classification criteria include:

a) said callee identifier begins with the same digit pattern as a national dialing digit (NDD) attribute of said callee identifier; and

b) a reformatted callee identifier produced by removing the NDD attribute from said callee identifier and including a caller country code has no DID record.

84. The apparatus of claim **81** wherein said public network classification criteria include:

a) said callee identifier begins with the same area code as an area code of said caller; and

b) a reformatted callee identifier produced by reformatting the callee identifier to include a caller country code has no DID record.

85. The apparatus of claim **81** wherein said public network classification criteria include:

a) said callee identifier has a length that is within a range of caller local number lengths; and

b) a reformatted callee identifier produced by reformatting the callee identifier to include a caller country code and area code has no DID record.

86. The apparatus of claim **74** wherein said plurality of calling attributes includes at least one of an international dialing digits field, a national dialing digits field, a country code field, a local area codes field, a caller minimum local length field, a caller maximum local length field, a reseller field, a maximum number of concurrent calls field and a current number of concurrent calls field.

87. The apparatus of claim **81** wherein said DID record comprises a user name field, a user domain field and a DID number field.

88. The apparatus of claim **74** wherein said processor is further operably configured to access a list of public network route suppliers when said public network classification criterion is met and to identify at least one of said public network route suppliers that satisfies public network routing selection criteria.

89. The apparatus of claim **88** wherein said processor is further operably configured to produce a public network routing message identifying said at least one public network route supplier that satisfies said public network routing selection criteria.

90. The apparatus of claim **89** wherein said processor is further operably configured to cause said at least one public network route supplier that satisfies said public network routing selection criteria to be placed in a preferred order.

91. The apparatus of claim **90** wherein said preferred order is by at least one of rate and preferred service agreements with said at least one public network route supplier.

92. The apparatus of claim **74** wherein said processor is further operably configured to cause the private network routing message or the public network routing message to be communicated to a call controller to effect routing of the call.

93. A call routing controller apparatus for establishing a call between a caller and a callee in a communication system, the apparatus comprising:

means for accessing a database of caller dialing profiles wherein each dialing profile associates a plurality of calling attributes with a respective subscriber, to locate a dialing profile associated with the caller, in response to initiation of a call by a calling subscriber; and

means for producing a private network routing message for receipt by a call controller, said private network routing message identifying an address, on a private network, through which the call is to be routed, when at least one of said calling attributes and at least a portion of a callee identifier associated with the callee match and when the match meets a private network classification criterion, the address being associated with the callee; and

means for producing a public network routing message for receipt by a call controller, said public network routing message identifying a gateway to a public network when at least one of said calling attributes and said at least said portion of said callee identifier associated with the callee match and when the match meets a public network classification criterion.

94. The apparatus of claim **93** wherein said private network classification criteria include:

a) said callee identifier does not begin with the same digit pattern as an international dialing digit (IDD) attribute of said callee identifier; and

b) said callee identifier does not begin with the same digit pattern as a national dialing digit (NDD) attribute of said callee identifier; and

c) said callee identifier does not begin with the same area code as an area code of said caller; and

d) said callee identifier does not have a length that is within a range of caller local number lengths; and

e) said callee identifier is a valid username.

95. The apparatus of claim **94** further comprising means for identifying the call as a cross-domain call on the private network when said callee identifier identifies a callee that is not associated with the same network node as said caller.

96. The apparatus of claim **94** further comprising:

means for accessing the database of caller dialing profiles to locate a callee dialing profile for the callee when said callee identifier identifies a callee that is associated with the same network node as said caller; and

means for retrieving call handling information associated with the callee, where said call handing information is available, said call handing information including at least one of call blocking information, call forwarding information, and voicemail information.

97. The apparatus of claim **96** further comprising, where said call handling information including said call blocking information is available, means for blocking the call being established with the callee when said call blocking information identifies the caller as a caller from whom calls are to be blocked.

98. The apparatus of claim **96** further comprising, means for causing said call forwarding information to be included in said private network routing message, where said call handling information including said call forwarding information is available.

99. The apparatus of claim **96** further comprising, where said call handling information including said voicemail information is available, means for causing said voicemail information to be included in said private network routing message.

100. The apparatus of claim **93** further comprising means for accessing a database of direct inward dial records each associating at least one direct inward dial number with at least one subscriber to said communication system.

101. The apparatus of claim **100** wherein said public network classification criteria include:

a) said callee identifier begins with the same digit pattern as an international dialing digit (IDD) attribute of said callee identifier; and

b) a reformatted callee identifier produced by removing the IDD attribute from said callee identifier has no DID record.

102. The apparatus of claim **100** wherein said public network classification criteria include:

a) said callee identifier begins with the same digit pattern as a national dialing digit (NDD) attribute of said callee identifier; and

b) a reformatted callee identifier produced by removing the NDD attribute from said callee identifier and including a caller country code has no DID record.

103. The apparatus of claim **100** wherein said public network classification criteria include:

a) said callee identifier begins with the same area code as an area code of said caller; and

b) a reformatted callee identifier produced by reformatting the callee identifier to include a caller country code has no DID record.

104. The apparatus of claim **100** wherein said public network classification criteria include:

a) said callee identifier has a length that is within a range of caller local number lengths; and

b) a reformatted callee identifier produced by reformatting the callee identifier to include a caller country code and area code has no DID record.

105. The apparatus of claim **93** wherein said plurality of calling attributes includes at least one of an international dialing digits field, a national dialing digits field, a country code field, a local area codes field, a caller minimum local length field, a caller maximum local length field, a reseller field, a maximum number of concurrent calls field and a current number of concurrent calls field.

106. The apparatus of claim **100** wherein said DID record comprises a user name field, a user domain field and a DID number field.

107. The apparatus of claim **93** further comprising means for accessing a list of public network route suppliers when said public network classification criterion is met and means for identifying at least one of said public network route suppliers that satisfies public network routing selection criteria.

108. The apparatus of claim **107** wherein said means for producing said public network routing message comprises means for producing a public network routing message identifying said at least one public network route supplier that satisfies said public network routing selection criteria.

109. The apparatus of claim **108** wherein said means for producing said public network routing message comprises means for causing said at least one public network route supplier that satisfies said public network routing selection criteria to be placed in a preferred order.

110. The apparatus of claim **109** wherein said preferred order is by at least one of rate and preferred service agreements with said at least one public network route supplier.

111. The apparatus of claim **93** further comprising means for causing the private network routing message or the public network routing message to be communicated to a call controller to effect routing of the call.

* * * * *

META 1016
META V. VOIP-PAL

(12) **INTER PARTES REVIEW CERTIFICATE** (2379th)

United States Patent
Perreault et al.

(10) **Number: US 8,542,815 K1**
(45) **Certificate Issued: Sep. 20, 2021**

(54) **PRODUCING ROUTING MESSAGES FOR VOICE OVER IP COMMUNICATIONS**

(75) Inventors: **Clay Perreault**; **Steve Nicholson**; **Johan Emil Victor Bjorsell**; **Fuad Arafa**; **Rod Thomson**

(73) Assignee: **VOIP-PAL.COM, INC.**

Trial Number:

IPR2016-01201 filed Jun. 15, 2016

Inter Partes Review Certificate for:

Patent No.: **8,542,815**
Issued: **Sep. 24, 2013**
Appl. No.: **12/513,147**
Filed: **Mar. 1, 2010**

The results of IPR2016-01201 are reflected in this inter partes review certificate under 35 U.S.C. 318(b).

META 1016
META V. VOIP-PAL

INTER PARTES REVIEW CERTIFICATE
U.S. Patent 8,542,815 K1
Trial No. IPR2016-01201
Certificate Issued Sep. 20, 2021

AS A RESULT OF THE INTER PARTES REVIEW PROCEEDING, IT HAS BEEN DETERMINED THAT:

Claims **34**, **54**, **74** and **93** are found patentable.

* * * * *