US008413189B1

(12) **United States Patent**
Parekh et al.

(10) **Patent No.: US 8,413,189 B1**
(45) **Date of Patent: Apr. 2, 2013**

(54) **DYNAMIC SELECTION OF ADVERTISING CONTENT IN A SOCIAL BROADCAST ENVIRONMENT**

(75) Inventors: **Jateen P. Parekh**, San Francisco, CA (US); **Michael S. Dougherty**, Burlingame, CA (US); **Sarah Caplener**, Santa Cruz, CA (US); **Scott Strain**, Hayward, CA (US)

(73) Assignee: **Jelli, Inc.**, San Mateo, CA (US)

(*) Notice: Subject to any disclaimer, the term of this patent is extended or adjusted under 35 U.S.C. 154(b) by 99 days.

(21) Appl. No.: **12/317,490**

(22) Filed: **Dec. 22, 2008**

Related U.S. Application Data

(60) Provisional application No. 61/009,024, filed on Dec. 21, 2007.

(51) **Int. Cl.**
H04N 7/10 (2006.01)
H04N 5/455 (2006.01)

(52) **U.S. Cl.** **725/42**; 725/32; 725/34; 725/35; 725/36; 725/46

(58) **Field of Classification Search** 725/32–36, 725/42, 46
See application file for complete search history.

(56) **References Cited**

U.S. PATENT DOCUMENTS

6,408,019	B1 *	6/2002	Pickering et al.	375/130
6,718,551	B1	4/2004	Swix et al.	
6,816,468	B1	11/2004	Cruickshank	
7,376,198	B2 *	5/2008	Day	375/295
7,500,257	B2	3/2009	Berstis	
7,555,020	B2	6/2009	Marko et al.	
7,653,921	B2	1/2010	Herley	
7,840,178	B2	11/2010	Hellman	
7,865,522	B2	1/2011	Purdy et al.	
7,867,086	B2	1/2011	Sitrick	
2002/0053078	A1	5/2002	Holtz et al.	
2002/0078441	A1	6/2002	Drake et al.	
2002/0144262	A1	10/2002	Plotnick et al.	
2002/0193066	A1	12/2002	Connelly	
2002/0194598	A1	12/2002	Connelly	
2003/0037144	A1	2/2003	Pestoni et al.	
2003/0229900	A1 *	12/2003	Reisman	725/87
2004/0158860	A1	8/2004	Crow	
2006/0184977	A1	8/2006	Mueller et al.	
2006/0218617	A1	9/2006	Bradstreet et al.	
2006/0248569	A1	11/2006	Lienhart et al.	
2006/0277569	A1	12/2006	Smith	
2006/0288074	A1	12/2006	Rosenberg	
2007/0067800	A1	3/2007	Wachtfogel et al.	

(Continued)

FOREIGN PATENT DOCUMENTS

EP	1681872	7/2006
WO	01/15451	1/2001

(Continued)

Primary Examiner — Kieu Oanh T Bui
(74) *Attorney, Agent, or Firm* — Van Pelt, Yi & James LLP

(57) **ABSTRACT**

A method of determining advertising content to be included in a broadcast is disclosed. An inclusion criterion is received for each of a plurality of items of advertising content to be used to determine one or both of whether and how that item of advertising content is to be included in a broadcast. Stored user profile data associated with a plurality of users who provided within an observation period an indication that the user was consuming the broadcast is processed, and the respective inclusion criteria of the items of advertising content, to select and integrate into the broadcast selected ones of the items of advertising content.

30 Claims, 9 Drawing Sheets

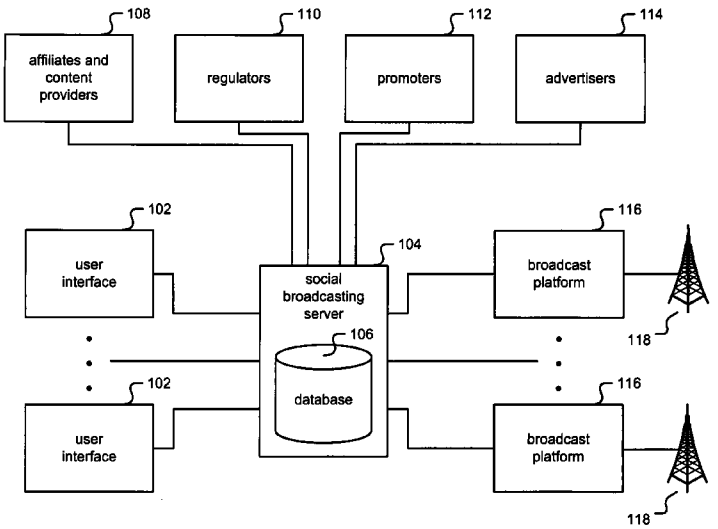

U.S. PATENT DOCUMENTS

2007/0186230 A1* 8/2007 Foroutan 725/24
2008/0092168 A1 4/2008 Logan et al.
2008/0115161 A1 5/2008 Kurzion
2008/0127241 A1 5/2008 Garcea
2008/0146342 A1 6/2008 Harvey et al.
2009/0049469 A1* 2/2009 Small et al. 725/35
2009/0083788 A1 3/2009 Russell et al.
2009/0123899 A1 5/2009 Bates
2009/0125934 A1 5/2009 Jones et al.
2009/0199230 A1* 8/2009 Kumar et al. 725/32
2009/0228910 A1 9/2009 Christinat et al.
2009/0288110 A1 11/2009 Logan et al.

FOREIGN PATENT DOCUMENTS

WO 2007078394 7/2007

* cited by examiner

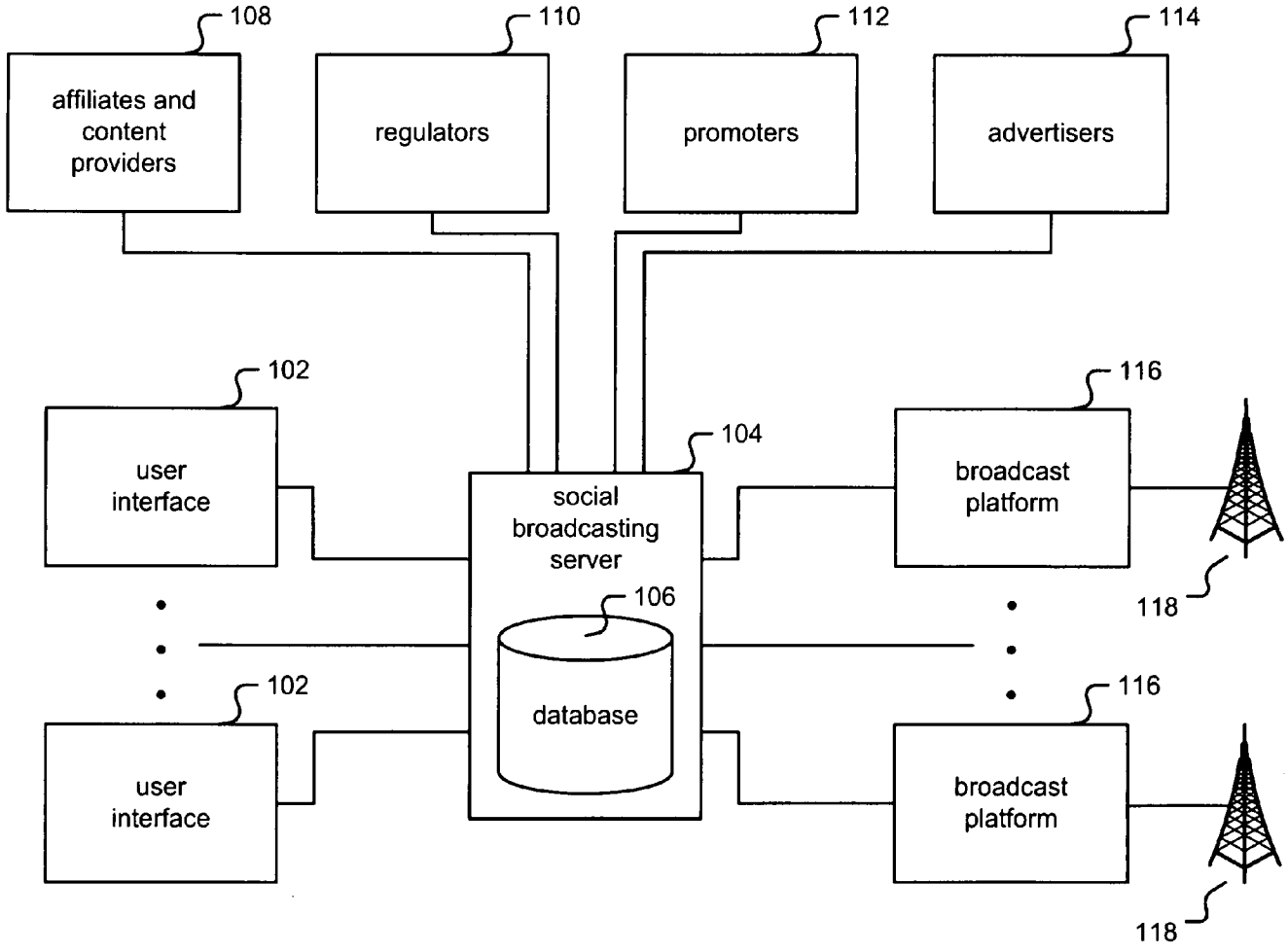
108
affiliates and content providers
110
regulators
112
promoters
114
advertisers
102
user interface
104
social broadcasting server
106
database
116
broadcast platform
118
102
user interface
116
broadcast platform
118

FIG. 1

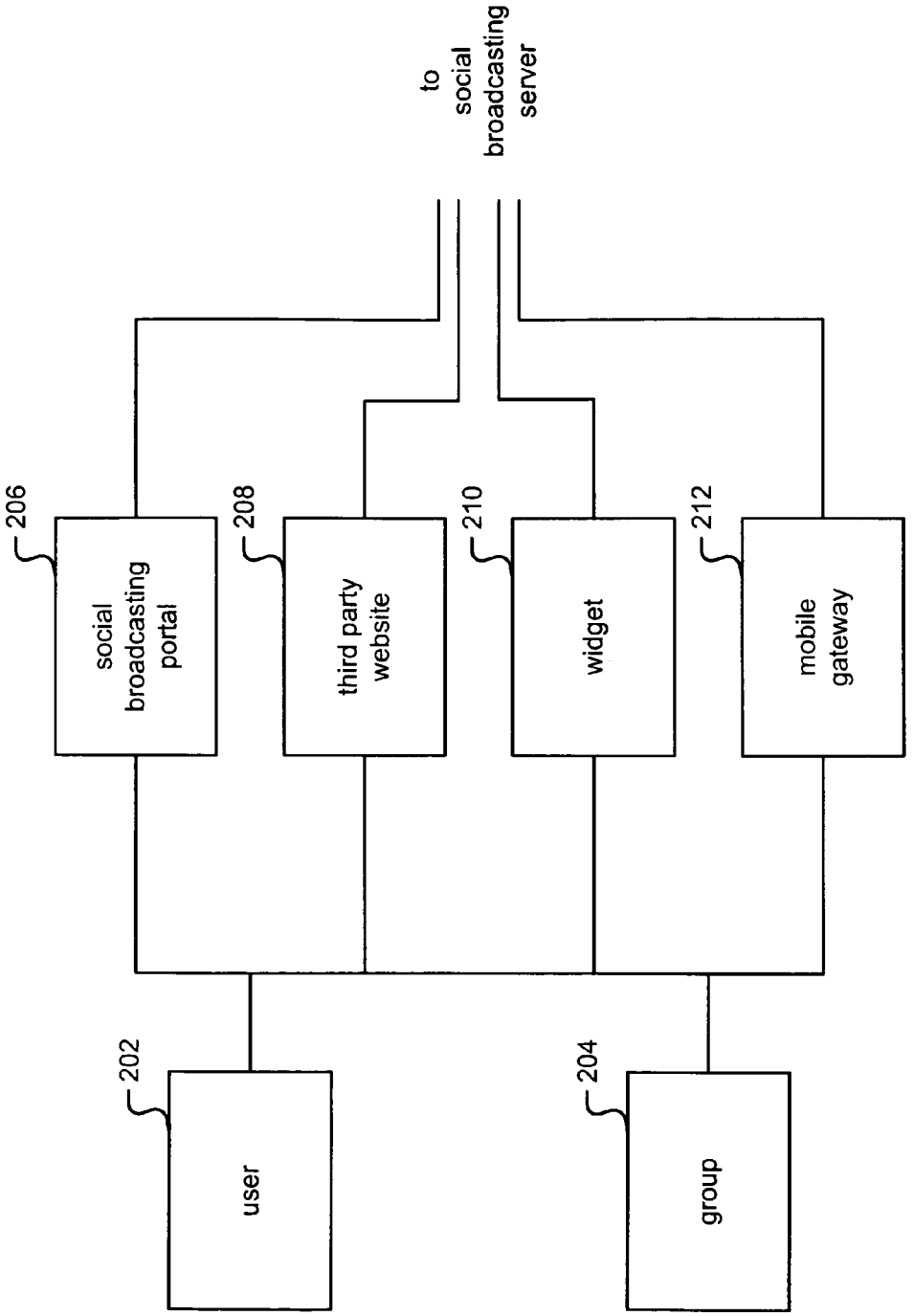
to social broadcasting server
206
social broadcasting portal
208
third party website
210
widget
212
mobile gateway
202
user
204
group

FIG. 2

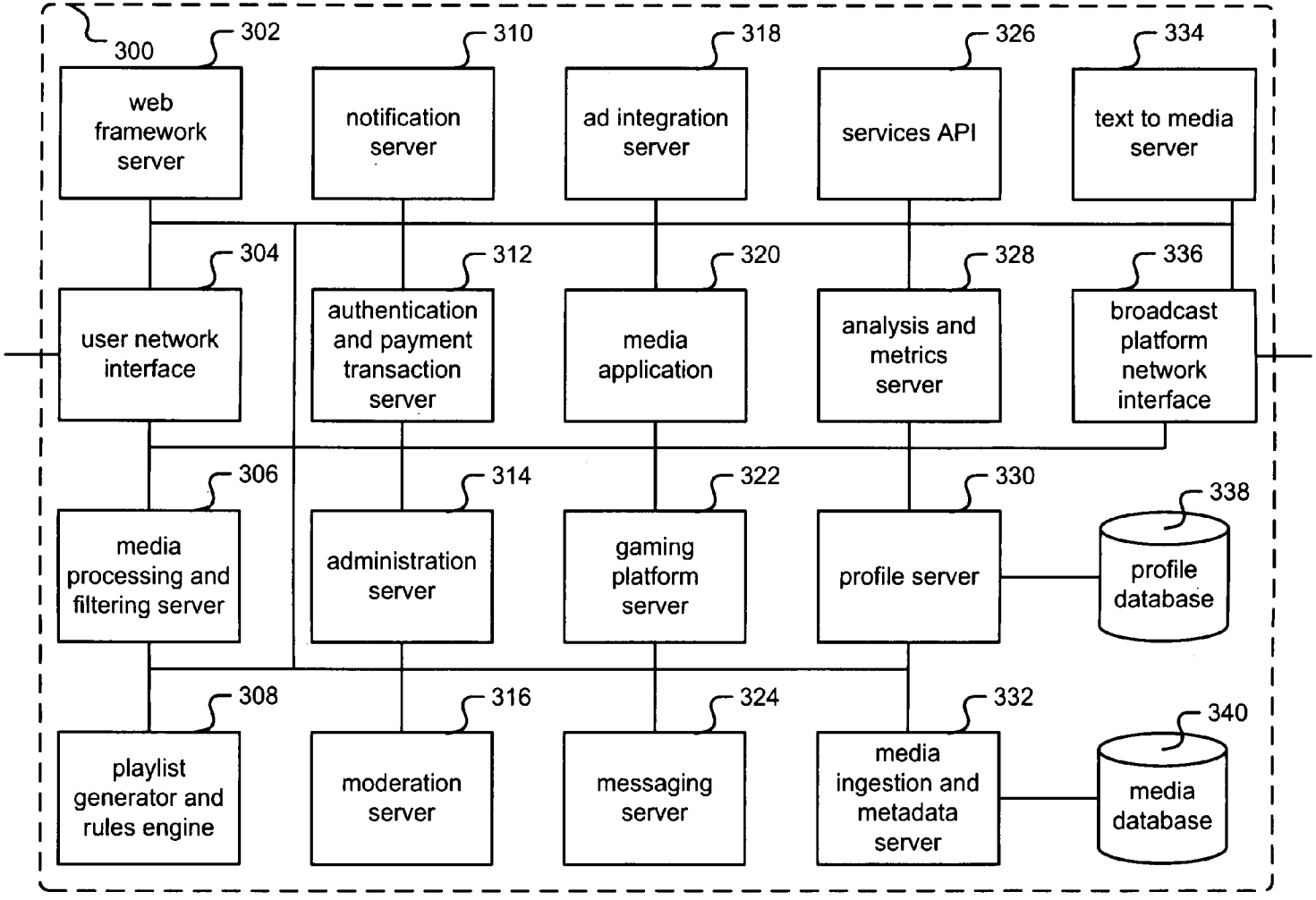
300
302
web framework server
310
notification server
318
ad integration server
326
services API
334
text to media server
304
user network interface
312
authentication and payment transaction server
320
media application
328
analysis and metrics server
336
broadcast platform network interface
306
media processing and filtering server
314
administration server
322
gaming platform server
330
profile server
338
profile database
308
playlist generator and rules engine
316
moderation server
324
messaging server
332
media ingestion and metadata server
340
media database

FIG. 3A

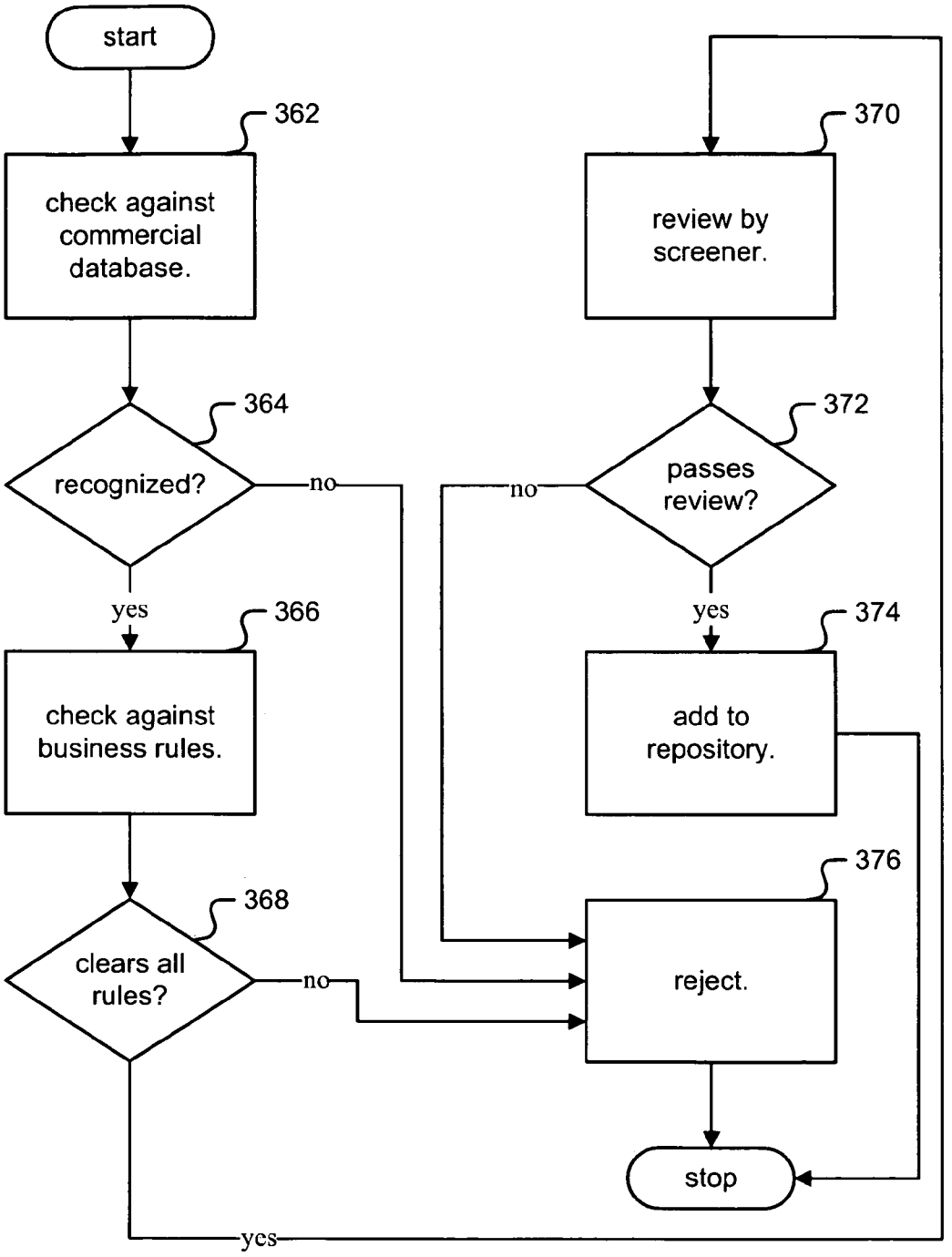
start
362
check against commercial database.
364
recognized?
no
yes
366
check against business rules.
368
clears all rules?
no
yes
370
review by screener.
372
passes review?
no
yes
374
add to repository.
376
reject.
stop

FIG. 3B

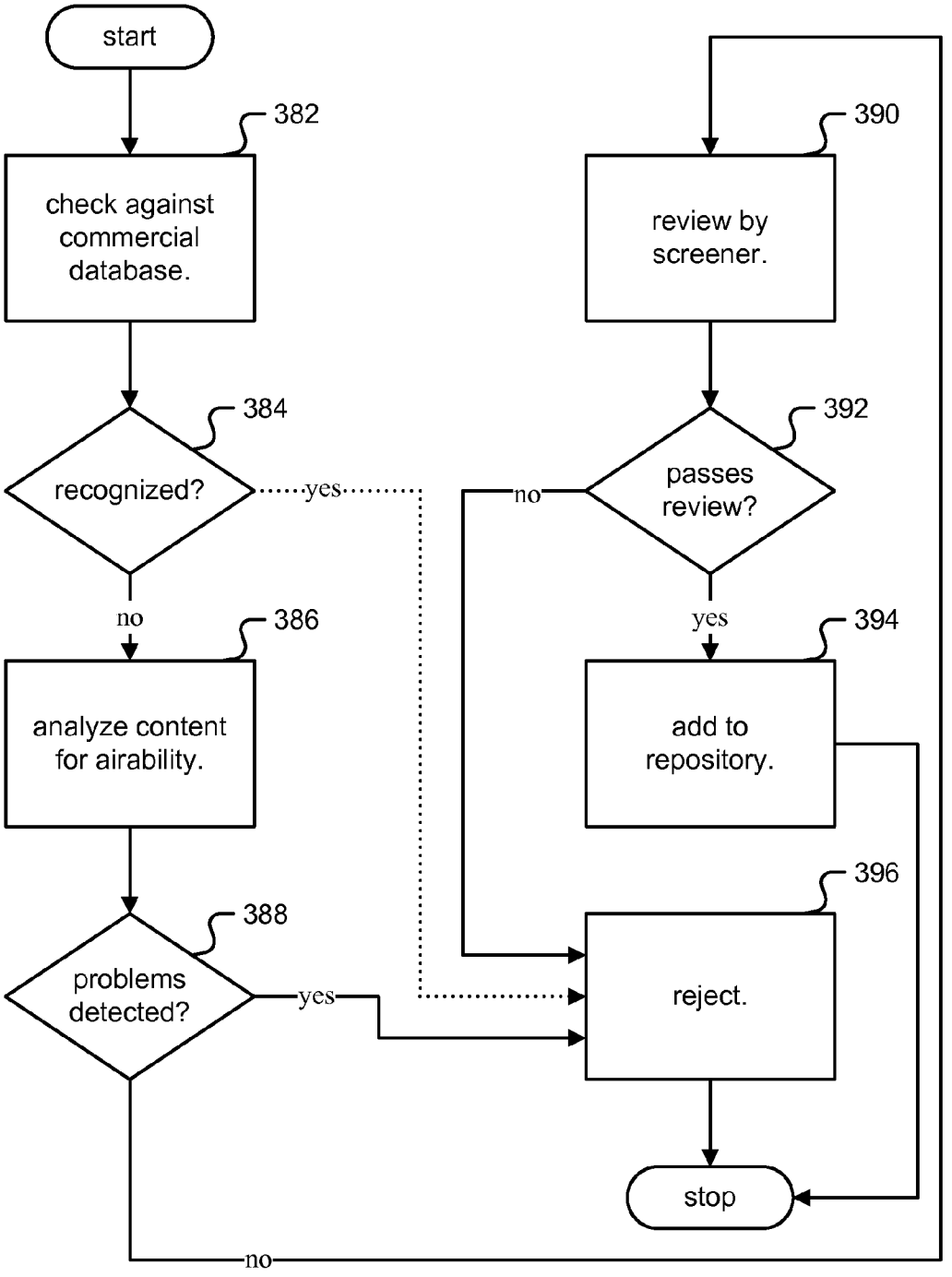
start
382
check against commercial database.
384
recognized?
yes
no
386
analyze content for airability.
388
problems detected?
yes
no
390
review by screener.
392
passes review?
no
yes
394
add to repository.
396
reject.
stop

FIG. 3C

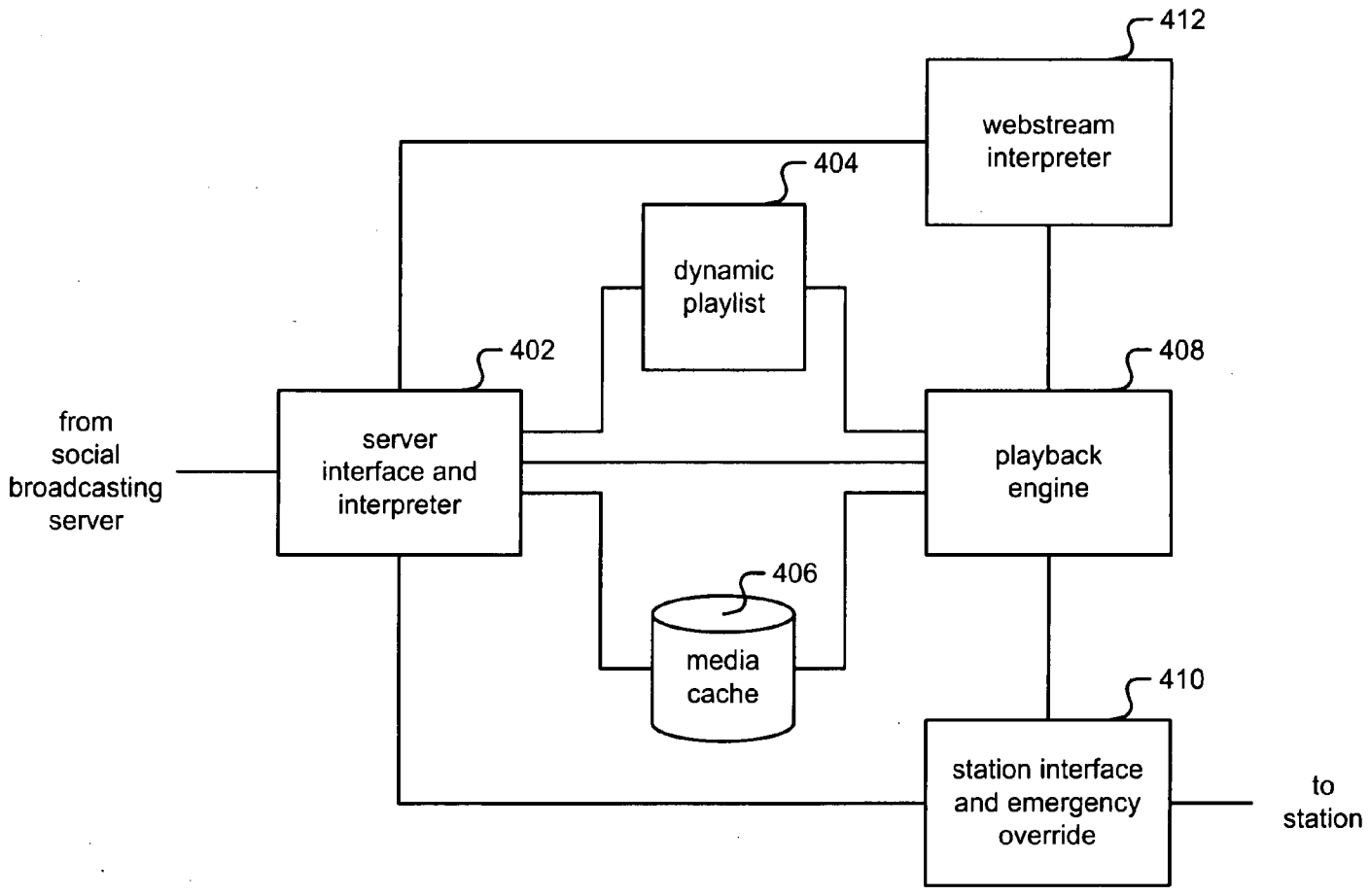
412
webstream interpreter
404
dynamic playlist
402
408
from social broadcasting server
server interface and interpreter
playback engine
406
media cache
410
station interface and emergency override
to station

FIG. 4

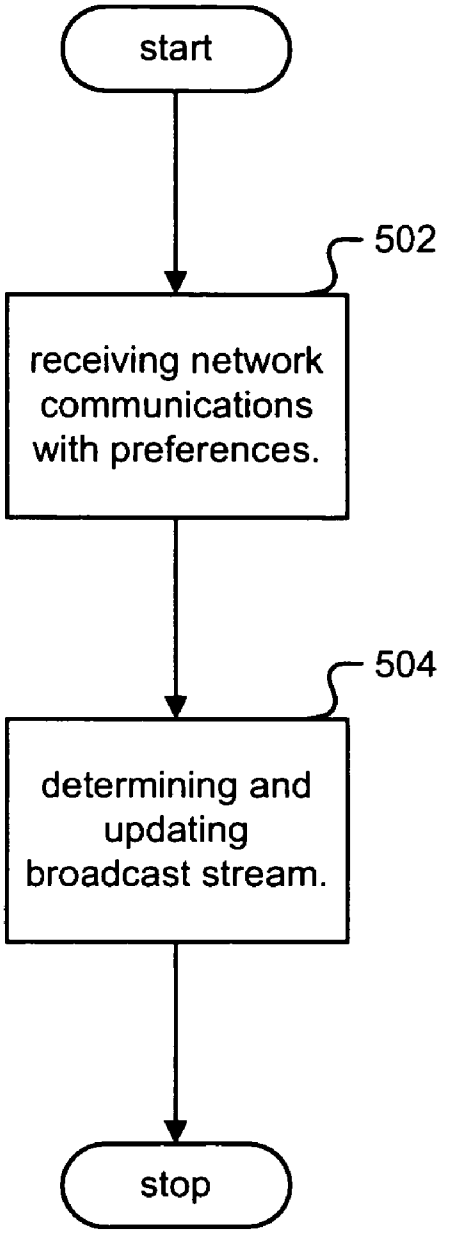
start
502
receiving network communications with preferences.
504
determining and updating broadcast stream.
stop

FIG. 5

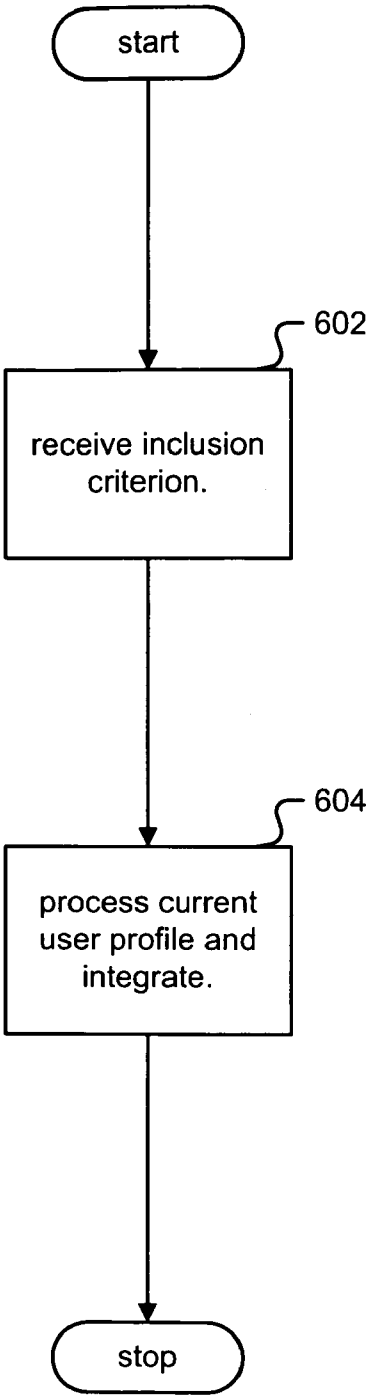
start
602
receive inclusion criterion.
604
process current user profile and integrate.
stop

FIG. 6

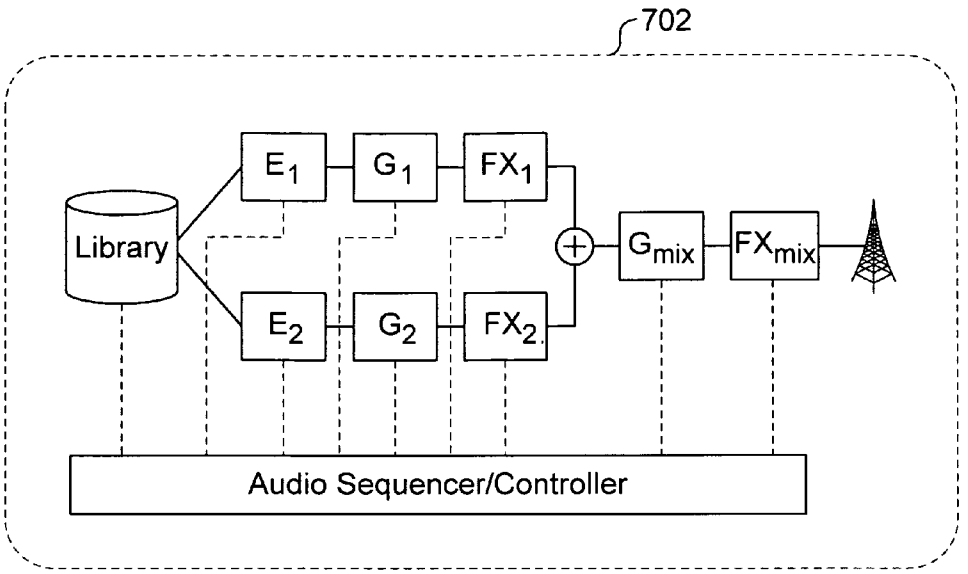
702
Library
E1
G1
FX1
E2
G2
FX2
Gmix
FXmix
Audio Sequencer/Controller

FIG. 7A

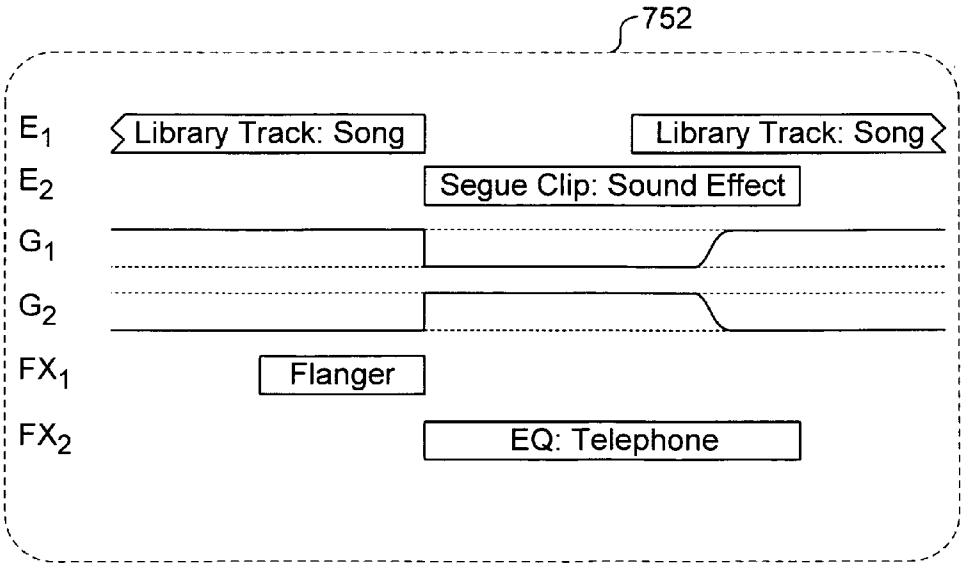
752
E1
Library Track: Song
Library Track: Song
E2
Segue Clip: Sound Effect
G1
G2
FX1
Flanger
FX2
EQ: Telephone

FIG. 7B

DYNAMIC SELECTION OF ADVERTISING CONTENT IN A SOCIAL BROADCAST ENVIRONMENT

CROSS REFERENCE TO OTHER APPLICATIONS

This application claims priority to U.S. Provisional Patent Application No. 61/009,024 entitled SOCIAL BROADCASTING filed Dec. 21, 2007 which is incorporated herein by reference for all purposes.

BACKGROUND OF THE INVENTION

Traditionally the content broadcast by media outlets has been determined virtually without direct input from consumers of the content. Throughout this specification, "media" may refer to any form of information transmission, for example radio, television, other communication using electromagnetic waves, cable, and/or computer transmissions. Throughout this specification, "users" refer to any consumers of the content, including listeners and viewers of the content.

Without direct input from consumers, media outlets are designed for broadcasts based on content programming from one or a limited number of sources. Predicting and/or estimating the users who listen to these static broadcasts is difficult over long periods of time without using coarse measurement such as survey methods or personal people meters.

BRIEF DESCRIPTION OF THE DRAWINGS

Various embodiments of the invention are disclosed in the following detailed description and the accompanying drawings.

FIG. **1** is a block diagram illustrating an embodiment of a system for social broadcasting.

FIG. **2** is a block diagram illustrating an embodiment of a system for interfacing users with social broadcasting.

FIG. **3**A is a block diagram illustrating an embodiment of a system for a social broadcasting server.

FIG. **3**B is a flowchart illustrating an embodiment of a process for commercial track uploading.

FIG. **3**C is a flowchart illustrating an embodiment of a process for user-generated content uploading.

FIG. **4** is a block diagram illustrating an embodiment of a broadcast interface for interfacing social broadcasting with a media or broadcast station.

FIG. **5** is a flowchart illustrating an embodiment of a process to provide social broadcasting.

FIG. **6** is a flowchart illustrating an embodiment of a process to selectively determine advertising for broadcast.

FIG. **7**A is a block diagram illustrating an embodiment of a signal flow model for an audio application.

FIG. **7**B is a block diagram illustrating an embodiment of a sample stream excerpt.

DETAILED DESCRIPTION

The invention can be implemented in numerous ways, including as a process; an apparatus; a system; a composition of matter; a computer program product embodied on a computer readable storage medium; and/or a processor, such as a processor configured to execute instructions stored on and/or provided by a memory coupled to the processor. In this specification, these implementations, or any other form that the invention may take, may be referred to as techniques. In general, the order of the steps of disclosed processes may be

altered within the scope of the invention. Unless stated otherwise, a component such as a processor or a memory described as being configured to perform a task may be implemented as a general component that is temporarily configured to perform the task at a given time or a specific component that is manufactured to perform the task. As used herein, the term 'processor' refers to one or more devices, circuits, and/or processing cores configured to process data, such as computer program instructions.

A detailed description of one or more embodiments of the invention is provided below along with accompanying figures that illustrate the principles of the invention. The invention is described in connection with such embodiments, but the invention is not limited to any embodiment. The scope of the invention is limited only by the claims and the invention encompasses numerous alternatives, modifications and equivalents. Numerous specific details are set forth in the following description in order to provide a thorough understanding of the invention. These details are provided for the purpose of example and the invention may be practiced according to the claims without some or all of these specific details. For the purpose of clarity, technical material that is known in the technical fields related to the invention has not been described in detail so that the invention is not unnecessarily obscured.

Selecting dynamically advertising content to broadcast, based at least in part on social broadcast user participation, is disclosed. Throughout this specification, "broadcast" may refer to any one-to-many communication, including: radio broadcast, terrestrial radio broadcast, satellite radio broadcast, cable radio broadcast, digital radio broadcast, television broadcast, terrestrial television broadcast, satellite television broadcast, cable television broadcast, digital television broadcast, broadcast over electromagnetic waves, broadcast over electromagnetic signals, broadcast over coaxial cable, and broadcast over twisted pair cable.

Items of advertising content are received, each with an inclusion criterion used to determine both whether and how that item of advertising content is to be included in a broadcast. Stored user profile data, associated with a plurality of users who provided within an observation period an indication the user was consuming the broadcast, is processed. The processed data is used with the respective inclusion criteria of each item of advertising content available to select items and integrate them into the broadcast.

In various embodiments, a social web is connected directly to a broadcast infrastructure, enabling the broadcast to evolve. The traditional broadcast model is inverted and opened by enabling users and communities to control and dictate programming via a simple web and/or mobile user experience and in some embodiments an open web services platform. The collective interest and participation of a community are automatically aggregated on a real-time basis and the result broadcast. In some embodiments, users can share their favorite content with a broad community, and content owners, artists and individuals can directly promote their works on air. In some embodiments, a scalable method for user generated content to be broadcast widely is provided. An open platform for third party communities, web sites and affinity groups to directly participate is provided in some embodiments.

In various embodiments, content is processed dynamically to provide a content stream that is ready for broadcast, for example, by adjusting audio levels and managing transitions between content, and downloaded to the broadcast infrastructure. Interactive features, integrated into the broadcast, drive user participation and loyalty.

Users or groups can search for, nominate, vote for and contribute their favorite content for broadcast and content owners can promote their content driving their fans and communities to participate in the process. Groups and websites can integrate with open APIs to further participate.

In various embodiments, a user centric website and mobile interface facilitate community participation in determining broadcast content. Widget and voting tools for third party sites are provided in some embodiments. "Widget" is defined throughout this specification as an object on a site that a user interacts with, for example a component of a graphical user interface ("GUI"), or a set of virtual buttons. A real-time, dynamically changing play list combined with real-time download and intelligent caching of candidate and/or selected content are used to provide a community-driven broadcast stream. In some embodiments, an extensible, modular web services architecture supporting open APIs is used to facilitate participation of broadcast station and/or social broadcast service partners (content, advertising, application) in the social broadcast service and/or experience.

FIG. **1** is a block diagram illustrating an embodiment of a system for social broadcasting. In the example shown, users interact with social broadcasting using a user interface **102**. There may be more than one user and/or user interface, for example a second user interface as shown in the figure. These user interface(s) are coupled to social broadcasting server **104**, which includes one or more database(s) **106**. Social broadcasting server **104** may be coupled other third parties, such as content provider(s) **108**, regulator(s) **110**, promoter(s) **112**, and/or advertiser(s) **114**. Social broadcasting server **104** is coupled to one or more media outlets, for example a broadcast platform **116** and broadcast station and/or infrastructure **118**. Throughout this specification, a "broadcast outlet" refers to a media outlet. There may be more than one media outlet, for example a second broadcast interface and second broadcast station as shown in the figure. The program streams to multiple broadcast outlets may be the same program streams or they may be different program streams. Throughout this specification, "coupling" may refer to a connection through any public or private network and/or combination thereof, for example the Internet, an Ethernet, serial/parallel bus, intranet, Local Area Network ("LAN"), Wide Area Network ("WAN"), and other forms of connecting multiple systems and/or groups of systems together.

Users through user interface(s) **102** provide input that directly influences the content of a broadcast stream to broadcast station(s) **118**, as described more fully below. These user interfaces include any method to provide input to a station including a telephone; voice input; voice mail; web browser; public Web API services; mobile message, for example simple messaging service ("SMS") or multimedia messaging service ("MMS"); or email.

Social broadcasting server **104** provides servers for services that coordinate the influence from the user interface(s) **102** to broadcast station(s) **118**, and database management for database **106**. In some embodiments the database **106** may be used to store user profiles and/or media outlet profiles. User profiles may contain user preference information, data reflecting user participation, user group or other affiliations, and/or demographic data. Media outlet profiles may include format information, rules governing content, constraints on and/or other preference regarding the degree, manner, terms, etc. of user participations, etc. In some embodiments the database **106** may be used to store downloaded/uploaded content, content received from content owners or distributors other than via download, (or upload), user provided content, advertiser owned and/or provided content, system tones, internet content formatted into audio clips, and user audio "tags" or signatures.

Social broadcasting server **104** couples with content providers **108**, including content providers, content owners, content distributors, or syndicators, for content to be considered for broadcast on broadcast station(s) **118**. Regulators **110** include non-governmental and governmental bodies, commissions or agencies such as the Federal Communications Commission ("FCC"), or enablers of laws such as the Digital Millenium Copyright Act ("DMCA") which provide regulatory and legal requirements to social broadcasting server **104** for consideration when broadcasting on broadcast station(s) **118**. Regulators **110** also include enablers of rules or policies for the broadcast station **118** itself, or for the rules or policies of the social broadcasting service. Promoters **112** include content stakeholders such as promoters, publishers, artists, groups, agents, enthusiasts, or any third party interested in promoting content from or not from content providers **108**. Throughout this specification, advertisers **114** include advertisers, ad networks, ad network services, ad relevancy services, ad broker services, sales teams and any nonprofessional or professional third party interested in advertising a message on broadcast station(s) **118**.

In some embodiments, social broadcasting server **104** determines dynamically, based at least in part on user and/or other input, a play list of content to be played on a broadcast station. In the example shown the play list and/or updates is sent to a broadcast platform **116**, located in some embodiments at the media outlet's premises. The broadcast interface receives content from server **104** and/or directly from one or more other sources. In some embodiments content is cached at the broadcast interface and updated as or if the play list changes, for example in response to user community input. The broadcast platform **116** provides as output to broadcast station **118** a content stream that is ready for broadcast by broadcast infrastructure. Broadcast station **118** includes any broadcast infrastructure including infrastructure for radio frequency transmission between 3 Hz and 300 GHz, satellite infrastructure and computer network infrastructure. The broadcast is received and consumed by users such as a user associated or not associated with user interface **102** via a radio, television, phone, computer, or other suitable receiving and/or rendering device.

In some embodiments, social broadcasting server **104** provides a server for web service for interface **102**, to influence directly the content broadcast by a media outlet **116**/**118**. Candidate content is displayed in some embodiments, and users given the opportunity to vote for which content should or should not be broadcast. For example users and/or groups of users may vote to promote content they would like to be included and/or to demote or block content they do not prefer. In some embodiments users may create, supply, and/or identify candidate content to be voted on by others. Web services may also be used to interface with **108**, **112** and **114**.

In some embodiments, social broadcasting server **104** includes one or more of the following:

a voting engine configured to: receive user votes and determine which content is to be included in a broadcast stream; track votes by members of a defined group of users, for example one set up with an interest in mind, such as fans of a particular band, or users in a particular demographic; and administer weighted voting, in which the votes of some users are weighted more heavily than others, such as users who have participated more than other, contributed content

received well by others, and/or have participated in other ways deemed to be advantageous, helpful, and/or well received;

a play list generation logic configured to: determine what content will be included; and link content items together to create an integrated and well synchronized content stream that is ready to broadcast, for example, linking a content item with a clip or content used to attribute the inclusion of the content item to a particular user or group. The output of **104** would be a content playlist, audio syntax, and links to content (for download);

a reporting/analytics logic, module, and/or engine configured to: gather and analyze user participation data to provide, for example to advertisers and ad networks, content owners, and/or others, information regarding how certain content has been received, which users and/or demographics have been and/or could be reached, etc.;

an audio application configured to: process content and stitch together content items of a variety of types and/or source formats and/or from a variety of sources in a way that provides a desired listening experience (or create a playlist with rules on how the broadcast platform can generate the stream); and

an ad relevancy engine configured to select ad content items dynamically, for example by matching ad content to non-ad content items so that the two can be broadcast at the same time and/or matching ad content to a demographic determined based at least in part on user participation and associated profiles to be consuming or anticipated to be consuming the broadcast at a particular time, including by determining how many ads will be broadcast, in what order and placement, etc (even if consumer feedback is provided to advertisers.)

In some cases, content receiving the highest vote may not necessarily be the content included in a broadcast. In some embodiments a selection algorithm is configured and/or tuned to include to at least some degree content popular with a defined or other minority of users, for example users who like a particular sub-genre, flavor, or interpretation of content within a genre. In some embodiments, greater weight may be given to input from users whose input has proven valuable and/or popular or otherwise useful in the past. For example, a user who in the past provided and/or suggested content that proved to be popular with others may be given greater weight. In some embodiments, this is done through power-ups and tools rather than giving an individual more power, or this is done by users banding together as a group to vote up content.

"Power" users, defined as those who have participated and/or contributed a lot to the community; users who have engaged in desired behavior, for example by responding to a promotion and/or participating in a contest and/or navigating to particular locations on the community and/or social broadcaster web service, etc., may in various embodiments receive super-votes that enable them to guarantee that certain content will or will not be included. Furthermore, business requirements from content providers **108**, promoters **112**, advertisers **114**, or the social broadcasting server **104**, and/or regulatory requirements from regulators **110**, may limit the broadcast period/frequency/timing of certain content, or even restrict content from broadcast inclusion. In some embodiments, a user may simply be provided tools to give more power.

In some embodiments, user participation that enables the broadcast and/or associated web page or other off-broadcast content to reflect the natural geographic affinity of a typical community of broadcast consumers is encouraged. For example, users are encouraged to post photos or other content from a local performance by a performer whose content has been included and/or is being promoted for potential inclusion in a broadcast. The local community is also encouraged to be heard and be active in the broadcast using one or more of: audio signature/avatar tones, vote activity, "shout outs" where users/groups grant attribution to other users/groups publically, internet feeds, Really Simple Syndication ("RSS") feeds, micro-blogging feeds, SMS/MMS feeds, and social networking feeds.

Content may include studio recordings, independent releases, user generated content, advertisements, operational content: for example, station identification; audio cues; and attribution as described below, and/or other content. Examples of user created and/or supplied content include audio and/or video recording of users performing music; user dialog or commentary; and content a user found on the Internet at a site that allows users to post media clips or other content. Users, artists, and content stakeholders like promoters **112**, authenticate content ownership rights and provide permission to broadcast the content as part of the content upload process. In some embodiments, users must be able to provide credentials as part of the content upload process. Examples of credentials include one or more of: a manual or automatic method of validating content ownership rights, a result from a digital file identification service, a result from an electronic media identification service, a result from a copyright management solution, an audible fingerprint, an acoustic fingerprint, a visible fingerprint, a video fingerprint, a signature, and a digital signature (or certification that the user owns the right to content and is allowing broadcast of the content.)

In some embodiments, content owners/providers **108** and/or third party promoters **112** have the opportunity to participate, for example to rally users to support the inclusion of certain content in the broadcast. In some embodiments, a voting button or other widget is the user interface **102** made available to be included in third party sites, such as content owner **108** sites, fanzines, other online media sites, pages associated with online communities and/or online social networking, to enable viewers of such pages to cast votes that influence the broadcast directly from the third party page, without navigating to a page associated with social broadcasting server **104**. In some embodiments an application programmers interface ("API") is used from the third party page that may or may not interface with social broadcasting server **104**. Groups and third party websites in some embodiments can integrate with open APIs to further participate. Advertisers and/or ad networks **114** may participate in a variety of ways, including by providing ad content. In some embodiments, ad content is or may be voted on, enabling advertisers to obtain feedback regarding which advertising content is preferred by which users.

In some embodiments, lightweight audio cues, for example a gong, buzz, or other tone or short clip, may be included in a broadcast, for example to alert the user community to an opportunity to provide input and/or view or otherwise access content on an associated website. For example, a particular tone may be broadcast between content items such as advertising content, to drive users to a website or other interface to vote on what non-advertising content should lead off the next segment, to participate in a real time contest or other competition, etc. In some embodiment an audio tone is played on the air to indicate a real-time user or community driven event.

In some embodiments, a user may receive acknowledgement and/or achieve status within the community by having his/her audio signature or "tag" included in a broadcast. For example, a user who created, provided, suggested, promoted, and/or was the last to vote for a content item selected by the

community to be included in the broadcast may have his/her audio signature included in the broadcast immediately before or after the content item. Examples of such an audio signature or tag include a short clip of the user's voice; a tone or other content created, designed, provided, and/or selected by the user; a clip excerpted by the user from another source; an audio, audiovisual, or other avatar or clip selected by the user from a library of avatars or other clips; etc. In some embodiments, users sign up and create a user profile and for at least those users who choose to have an audio signature the signature or a pointer thereto is included in their user profile. The signature or pointer is retrieved from the profile for use, for example when the user participates in a manner that earns the user the right to receive attribution in the broadcast. Throughout this specification "avatar" describes a media representation of a user. In some embodiments, an audio avatar is an audio clip, song, signature, tag or recording used to represent a user. Participation by others may be encouraged simply by hearing/seeing content being attributed to other users and/or explicitly via the broadcast and/or website. In some embodiments a user's screen name is read out on the air via a text-to-speech engine conversion.

FIG. **2** is a block diagram illustrating an embodiment of a system for interfacing users with social broadcasting. In some embodiments, the user interface **102** in FIG. **1** is included in the system shown in FIG. **2**. In the example shown, users **202** and group(s) of users **204** interact with one or more of: social broadcasting portal **206**, third party website **208**, widget **210**, and mobile gateway **212**. Each user interface **206-212** is coupled with social broadcasting server **104**.

In some embodiments a social broadcasting portal **206** includes a web server that is hosted by the social broadcasting service owners, for example from or on social broadcasting server **104**. The social broadcasting portal **206** allows users **202** to see what is currently playing on the associated broadcast and to indicate their opinions with real-time comments and voting with regards to currently rendering/playing and pending media content. Another example is using the social broadcasting portal **206** to determine a playlist for the associated media station, where content includes media, user contributions, and feeds from networks such as the Internet. Another example is using the social broadcasting portal **206** to allow users to create a playlist in a real-time style similar to a massive multiplayer game, allowing users to not only vote, but to use "power-ups". In some embodiments, super-votes include power-ups. An example of power-up is a "bomb", which reduces or eliminates users' votes for a certain piece of media content ("piece") and/or interrupts a broadcast to remove that currently playing piece. Another example of a power-up is a "rocket", which enhances or adds to users' votes for a certain piece and/or moves that piece to be next played on the broadcast.

In some embodiments, social broadcast portal **206** fosters an active community to power the selection of the broadcast. Social features may include instant messaging ("IM"), forums, messaging boards, bulletin boards, and a facility to form and maintain groups of users, for example group **204**. Social broadcast portal **206** encourages community activity and also may provide visualization of community activity including publication of user generated content, avatars to represent users, and analysis of community activity. In some embodiments, social broadcast portal **206** allows a user to interface to existing social networks for more seamless user registration, growth of the overall community, and community promotion capability.

In some embodiments, third party website **208** uses a web services platform to integrate social broadcast portal **206** and/or social broadcast server **104**. In some embodiments, a third party website **208** is a partner site where users can vote on content or interact with it using a power-up. In some embodiments, a social network site may be integrated with the social broadcasting system using an application, for example a Facebook application. In some embodiments, third party sites may use a widget **210** for smoother integration in an existing site. The functionality of a widget may be as simple as a set of voting buttons.

In some embodiments, mobile gateway **212** enables interaction from user **202** and group **204** via mobile devices, for example mobile phones, mobile computers and mobile personal data assistants ("PDAs"). A mobile gateway **212** may permit interaction with the social broadcast system using messaging services, for example IM, TFN, SMS or MMS, web services, for example Wireless Application Protocol ("WAP"), proprietary network services, for example Binary Runtime Environment for Wireless ("BREW"), open network services, for example, Java (2) Platform Micro Edition ("JME" or "J2ME"), hardware services, for example Bluetooth, or email services. A user using a mobile device with mobile gateway **212** may be connected to the social broadcast system from anywhere and vote or game, track favorite pieces, by alerted about upcoming broadcasts and gaming, and upload content with the mobile device. In some embodiments networks from Wide Area 2G (GPRS, Edge), Wide Area 3G (CDMA, HSPA, UMTS, WiMAX), Local Area (WiFi, Ethernet, etc.), and Personal Area (BlueTooth) are used to interface with mobile gateway **212** and/or user interface **102**.

In some embodiments, user profiles and/or identifiers may be shared with other third parties, to provide identification or other details/transactions/data of a user from user interface **102** who has not authenticated through the social broadcasting service and/or social broadcasting portal **206**. For example, a user using a third party website **208** called Faceboon and/or a widget **210** on Faceboon may use/share Faceboon's user authentication to identify the user for the social broadcasting service.

FIG. **3**A is a block diagram illustrating an embodiment of a system for a social broadcasting server. In some embodiments, the system in FIG. **3**A is included in social broadcasting server **104** in FIG. **1**, and the user profile database **338** and media database **340** is included in database **106** in FIG. **1**. The social broadcasting server in FIG. **3**A may be in a single machine or span a plurality of machines, server farms or virtual data centers ("VDC") such as Amazon S3/EC2. User network interface **304** is coupled with user interface **102**. Broadcast platform network interface **336** is coupled with broadcast platform **116**. As shown in FIG. **3**, each of the interfaces and servers shown are coupled with every other interface and server shown, profile server **330** is coupled with profile database **338**, and media ingestion and metadata server **332** is coupled with media database **340**. In the example shown, the social broadcasting server **300** in FIG. **3**A comprises a plurality of servers and databases including:

Web server and framework **302**, in part to service social broadcasting portal **206**, and to expose communications interfaces configured to enable broadcast affiliates, users, and ad partners, for example, to interact with and participate in social broadcasting;

User network interface **304**, in part to interface with user interface **102**, including a network interface for processing network communications between the rest of the servers in FIG. **3**A with one or more of: social broadcasting portal **206**, third party website **208**, widget **210**, and mobile gateway **212**;

Media processing and filtering server **306**, in part to provide digital signal processing and filtering of content and media, for example volume normalization for audio media, brightness normalization for video media, or filtering content into alternate forms;

Playlist generator and rules engine **308**, in part to provide coordination between APIs from users **202**/groups **204**/networks **108**/affiliates **108** and requirements from regulators **110** and broadcast partners to form a playlist for broadcast station **118**;

Notification server **310**, in part to provide notification to users **202** and groups **204** about upcoming "alerts" and provide the user community an opportunity to vote, provide input, and/or view or otherwise access content on an associated website;

Authentication and payment transaction server **312**, in part to facilitate economic exchanges between users **202**, groups **204**, network **108**, affiliates **108** and/or the social broadcast system;

Administration server **314**, in part to perform reporting, logging, internal moderation, financial, accounting, and distribution of royalties within the social broadcast system;

Moderation server **316**, in part to provide moderation tools to ensure broadcasts are consistent in theme (e.g. jazz on jazz station), legal in form (e.g. comply with the FCC), and legal in ownership (e.g. preserves content ownership or license);

Ad integration server **318**, in part to determine an estimate of the listening demographic and/or ad relevancy for a period of time, integrate with ad networks to provide near-in-time and/or just-in-time serving of ads, enable real-time ad measurement and analysis, and enable users **202** and/or groups **204** to vote on ads;

Media application **320**, in part to output the integrated media experience from the playlist generated in rules engine **308**, for example an audio application to provide facilities for multiple tracks/pieces/content, mixing and sequencing;

Gaming platform server **322**, in part to provide a system of participation economics, voting dynamics and gaming dynamics for users **202** and/or groups **204** to determine broadcast content, and for alternate entertainment related or unrelated to the broadcast content;

Messaging server **324**, in part to coordinate real-time or delayed messaging between users **202** and/or groups **204**, generate "social noise", defined throughout this specification as visualization/audiolization of current community activity; and/or a sense perceptible indication of a current level of user participation in the social broadcast environment; facilitate "messaging" as directed communication between users, sets of users, or groups; and facilitate other communication between users **202** and/or groups **204**;

Services API **326**, in part to enable interfacing with sites, web sites, portals, mobile technologies, web applications, and/or widgets, including third party website **208**, widget **210**, and mobile gateway **212**, and using for example open APIs;

Analysis, reporting, analytics and metrics server **328**, in part to analyze station statistics with information equal to or superior to Arbitron or Nielsen ratings based in part on user community information, analyze demographics statistics of the user community for a given period of time, and report statistical information;

Profile server **330**, in part to generate, facilitate and maintain profiles for users and/or media outlets/stations as described above, and provide an interface and/or database management for profile database **338**;

Media ingestion and metadata server **332**, in part to take content from disparate sources and "ingest" or normalize format and content for a consistent broadcast, add, modify or delete metadata about each content piece, user **202** and/or group **204**, and provide an interface and/or database management for media database **340**. Media ingestion and metadata server **332** may in some embodiments also include an affiliate data and content server, in part to service data, such as programming and metadata, and content for broadcast network affiliates **108**, where throughout this specification "affiliates" includes network affiliated stations **108**, network-owned stations **108** and any content providers **108**. In some embodiments the media ingestion and metadata server **332** processes cross media indexing or connections, for example enabling the song to play "off-line", or on the air, linking to lyrics on a web site, linking song content about products or services to ads, etc.;

Text to media server **334**, in part to take text or other forms of input from users and/or user profiles, for example gestures or strokes, and upconvert them to alternate forms of media/communication, for example speech (text-to-speech), voice, music, visualization patterns, and/or video;

Broadcast platform network interface **336**, in part to interface content/data from the rest of the servers in FIG. **3**A to broadcast platform **116** and broadcast station **118**, and in some embodiments using a language and/or program stream, for example eXtensible Markup Language ("XML") to couple with the broadcast interface;

Profile database **338**, in part to facilitate storage of profiles for users **202**, groups **204**, and media outlet **116**/**118**, including preference information, participation information, affiliations, demographic data, format information, rules, constraints, etc.;

Media database **340**, in part to facilitate storage of media and other content, for example music, audiobooks, video, user-generated content, network feeds, Internet feeds, audio libraries, ads, station audio clips, social broadcasting audio clips, chrome, bumpers, playlists, logs, gaming data, and messaging.

Media Ingestion.

In some embodiments, a content upload workflow for media ingestion and metadata server **332** includes providing at least two options: one for commercial track uploading and one for user-generated content uploading.

FIG. **3**B is a flowchart illustrating an embodiment of a process for commercial track uploading. The process may be implemented by media ingestion and metadata server **332** and/or social broadcasting server **104**.

The track is checked against a commercial database (**362**), for example an electronic media identification service. If (**364**) it is not recognized, it is rejected (**376**), otherwise the track is checked against business rules using metadata provided by the uploader and/or the commercial database (**366**). Examples of business rules include those interpreted and/or provided for by moderation server **316**. If (**368**) it does not clear all rules, it is rejected (**376**), otherwise the track is reviewed by a screener to find any problems missed by automated testing (**370**). If (**372**) it fails the review, it is rejected (**376**), otherwise it is added to the media database **340** with the appropriate metadata (**374**).

FIG. **3**C is a flowchart illustrating an embodiment of a process for user-generated content uploading. The process may be implemented by media ingestion and metadata server **332** and/or social broadcasting server **104**.

The content is checked against a commercial database (**382**), for example an electronic media identification service. If (**384**) the content is recognized as a commercial track, in one embodiment (not shown) the system may offer to submit it as a commercial track, and if the offer is accepted, follow

the workflow in FIG. 3B, step **366**, and otherwise reject it (**396**). In another embodiment (shown by the dotted line) the system may simply reject any recognized commercial track (**396**). The content is analyzed for "airability" (**386**), analogous to rules interpreted and/or provided for by moderation server **316**. This may involve automated, semi-automated and/or manual ways of rendering the content to analyze for airability. If (**388**) problems are detected, the content is rejected (**396**), otherwise the content is reviewed by a screener to find any content issues (**390**), such as illegal recordings or profanity. If (**392**) it fails the review, it is rejected (**396**), otherwise it is added to the media database **340** with the appropriate metadata (**394**).

Rules Engine.

In some embodiments, rules engine **308** is used to temper the indication of control from the user community with regards to what tracks are played on-air and in what order from gaming platform server **322** with a combination of guidelines and rules, such as station policies and regulations from regulators **110**. Throughout this specification, a "track" refers without loss of generality to any piece of media content, including a song, audiobook, sound bite, audio clip, video clip, video, music video, movie or game.

For example, tracks elected by the users may be deferred, or other tracks may be inserted, based on business rules. These rules may be static which apply at all times or dynamic which apply only under certain conditions, such as time of day or size of online audience.

Examples of business rules include FCC regulations for content, including: that indecent and/or profane material may not be broadcast outside the FCC Safe Harbor; three songs from the same recording, or four songs from the same artist or anthology, may not be played within a three-hour period; and two songs from the same recording, or three songs from the same artist or anthology, may not be played in a row. Throughout this specification "anthology" includes a boxed set.

Another example of business rules include FCC regulation policies, including: that a station identifier must be played at the beginning and end of each time of operation, hourly, or as close to the hour as possible, for example at a natural break in program content.

Another example of business rules include station policies, including that: tracks may be limited to certain genres or track lengths; genre changes, also known as "drift" may be limited or slowed; and vote contributions from affiliated stations may be included in the score calculation.

Another example of business rules include discretionary control, including that; certain tracks may be banned; high-score criteria for play may be suspended temporarily, for example to give low-scoring new releases some exposure; and other criteria may be used to determine track play, for example low scoring but fast-moving tracks.

User Experience Effects.

In some embodiments, to support the business rules described above, a number of user-experience effects may be defined.

For example, for tracks that are not allowed to be played within a specified period of time, for example based on FCC regulations, or are currently disallowed, for example from an undesired genre, effects include: blocking those tracks from a "Coming Next" candidate list or "carousel", including providing an on-screen explanation for why the track cannot play, for example a popup window on item rollover; removing such items from the "Coming Next" candidate list, including providing an on-screen explanation when the items are removed; bombing such items if they are currently playing, including providing an on-screen and/or on-air explanation when they are bombed; disabling rockets for those tracks, including provide an on-screen explanation for why the rocket is disabled, for example a popup window on a Rocket tool rollover.

For example, for an already rocketed track that is deferred indefinitely, effects include: clearing the rocket, including notifying the user that applied the rocket and/or refunding the rocket to that user. An alternate policy may be considered, including defering the track, but playing it as soon as it is allowed and notifying the user that applied the rocket.

Moderation Server.

In some embodiments, moderation server **316** includes moderating by removing media or portions of media because: Material is obscene (contains graphic sexual descriptions, sounds or imagery, contains suggestive sexual content, or other sexual content); Material is indecent (contains sexual or excretory sounds or imagery, descriptions or depictions, contains descriptions or depictions of sexual or excretory organs, contains material appearing to pander or is used to titillate or shock, or contains profane language); Material is violent or repulsive (contains graphic descriptions of violence, contains material describing animal abuse, or contains shocking or disturbing material); Material is hateful or abusive (promotes hatred or violence, or promotes bullying tendencies); Material infringes rights (infringes copyright or infringes privacy); or Material is not relevant for broadcast, for example spam.

Gaming Platform Server.

Examples for voting dynamics for gaming platform server **322** include the social broadcasting community participating through a collection of connected services and devices. The following paragraphs [0069]-[0093] describe features included in various embodiments of "voting dynamics" as embodied throughout this specification.

The economy of the service may be point-based, with a variety of income sources and expense types, including Income, Expenses and Tokens.

"Income" refers to points received by participating in, or contributing to, the community. This can be further broken down as follows:

Awards, as points granted as a result of active participation, for example being an active voter. These can be thought of as "thank-you" points, or a kind of "allowance" for being an active part of the community;

Earnings, as points granted as a result of explicit contributions to the community, for example for each vote, or for content uploads. This can be thought of as payment or compensation for those contributions;

Gifts, as points granted unrelated to a user's activity, for example bonus points as part of a promotion; and

Cash Purchases, as points purchased with cash.

"Expenses" refer to points spent to acquire something of value within the community. These fall into the following categories:

Assets, as items that users can collect, view, and share, for example custom icons for their profile;

Level, wherein a user's influence in the community may be a function of their level, for example the power of their votes;

Access, wherein users can pay to gain access to the station for a period of time. This is defined throughout this specification as a "shout-out";

Actions, wherein users can force a specific event to occur, for example a bomb or rocket; and

Products, wherein users can spend points to buy tangible products, for example merchandise, memorabilia, t-shirts, and/or music downloads.

Tokens.

Points can be granted in the form of "tokens" that can be redeemed for specific Expense categories described above. They can be received as any of the listed Income categories. There are two kinds of tokens: Bankable tokens, that can be saved for use at a later time. For example, a bomb is an "action" token; and Immediate use tokens, that are used/spent as soon as they are granted. For example, a user may receive a "level" token to increase their power level.

Expense categories may refer to items that are in either limited or unlimited supply. This may be based on physical constraints, for example the limited amount of airtime available, or artificial constraints, for example only a limited supply of "bombs" are available each day. Supply of all items will be managed to ensure the community and its economy remain healthy and/or reasonable.

The support of user-to-user exchanges of points or other expensed items between members of the community may be supported. This may take the form of: Discretionary transfers from one user to another, for example, as a means for users with large point balances to help a new user get started; and Thefts from a user, for example as part of the gaming dynamics, for example, by offering a power-up that allows a user to "steal" points from another.

Income.

The ways in which users can receive income may be tabulated as follows:

Income	Type	Token?	Description
Sign-Up	Award		"Starter" balance when first signing up.
Vote Cast	Earning		Each vote cast.
Frequent Voter	Award		Achieved "frequent voter" status. May be granted on a recurring basis as long as this status is maintained.
First Mover	Award		First voter on a track.
Influencer	Award		Early voter on tracks that achieve a certain level of popularity.
Promotion	Gift	Optional	Result of a promotion. May be in the form of a Token.
Item Uploaded	Earning		Uploaded an item. Value is a function of type of item uploaded.
Group Host	Earning		Formed a Group. May be granted on a recurring basis as long as host role continues.
Evangelist	Earning		Brought a number of users into the Jelli community.
Profile Updated	Award		Added additional information to their user profile.

The value of each income type may be tuned to support a fair, fun and vibrant community. Income sources may be in the form of tokens, as appropriate.

The ways in expenses are found in the community may be tabulated as follows:

Expense	Type	Token?	Description
Custom Icon	Asset	Optional	A custom decorative icon that can be shown in a user's profile.
Custom Stinger	Asset	Optional	A custom audio "stinger" that can be associated with a user's profile. (An "audio icon")
Level Bump	Level	Y	An increase in level.
Shout-Out Audio	Access	Y	Buy time on-air to play a personal recording.

-continued

Expense	Type	Token?	Description
Shout-Out Text	Access	Y	Buy space on the site for a personal message.
Bomb Track	Action	Y	Apply a Bomb to any track.
Bomb On-Air	Action	Y	Apply a Bomb to the currently playing track.
Rocket Track	Action	Y	Apply a Rocket to any track
Catalog Item	Product		Purchase a catalog item (such as a t-shirt).
MP3 Download	Product		Purchase a music track for download.

The point cost of each expense may be tuned to support a fair, fun and vibrant community. The expense may be in the form of tokens, as appropriate.

Voting.

Tracks may be added to the broadcast stream based on their score. At any given time, the next track to be played is the highest scoring one, unless overridden by business rules or any unexpected events. The score of a given track can be expressed as: Track Score=f(Votes, Power-Ups, Time, User Activity, Number of Active Users). One example to relate scores to tracks is: a "Yes" vote contributes a score of 1 to a track; a "No" vote contributes a score of −1 to a track; and "Abstain" (i.e. neither a "Yes" nor "No" vote) contributes a score of 0 to a track.

A given user's vote may have a limited lifetime. One example of how a value of a given vote decays over time is: a vote retains its full value until t1, then linearly approaches a value of 0 at t2, passing through threshold v. If a track gets on air, users may continue to vote on it, but if enough users vote an on-air item down, such that its score is reduced by g % of its "winning score" then that track is immediately treated as if it were bombed, or taken off air immediately. An example of a winning score would be the score at the time it went on air.

After a track gets on-air and finishes playing without getting bombed, the decay for all votes applied to that track may be accelerated such that they drop by p % of their current value; normal decay may then resume. This helps prevent the track from remaining a top-scorer indefinitely, but still keeps users' votes active.

The vote tools shown for each track may indicate the age of a cast vote. Users may be kept informed of the status of their votes, via system messages. For example, a user may receive a warning message when absolute value of their vote drops below the threshold, v, inviting them to "recast" their vote. Another example is that a user may receive a message when their vote value reaches 0, inviting them to "recast" their vote, and re-add the item to their active list.

Example values for the decay and threshold parameters are:

Parameter	Definition	Value
t1	Time for which vote retains its full value	1 day
t2	Time at which vote value is linearly approaches 0	1 week
v	Vote value (+ or −) at which user is sent a warning message	0.2
p	Percentage drop in vote value when track finishes playing on-air	75%
g	Percentage drop in score of an on-air track that will cause track to be bombed	25%

Power-Ups.

Power-ups may be earned based on business rules, and a user may earn any number of each kind of power-up, wherein earned power-ups are stored on the user's account. Power-ups may be of single-use or multi-use and a power-up is deducted from the user's account once it's used. The score contributions of power-ups do not decay, unlike votes, but they are removed once the intended outcome of a power-up is achieved. For example the score contribution of a rocket is removed once a track is played on-air, or the track is bombed.

Bomb.

When a bomb is applied to a track, its score may be adjusted by setting its track score to zero. This also means that all votes cast for that item by other users are cleared. In contrast, if users vote down an on-air track such that its score is reduced by g % of its winning score, that track is treated as if it was bombed but in that case, users' votes for this item are not cleared.

If a bombed track has an active rocket applied, the user who applied the rocket may be compensated by refunding the rocket or automatically reapplying the rocket to the track at the next opportunity.

Rocket.

When a rocket is applied to a track to ensure that it gets into a "Coming Next" carousel, its score may be adjusted by setting its track score to the score of the highest scoring track at that moment added to the carousel vote flow for half of the time remaining before the next play.

In some embodiments, a given track may only have one rocket applied at a time. If a given song has already been rocketed, but not yet played or bombed, its rocket tool may be disabled, and a track's rocket is cleared once its played or bombed.

The "carousel vote flow" may include votes collected for any items while they are in the "Coming Next" carousel. Votes collected for items before they appear in the carousel are not counted in this vote flow.

Virus.

A virus may be applied to the entire social broadcasting service or associated station. Examples of these include: a "Decay Virus", wherein the decay rate of all votes is adjusted for a length of time; a "Genre Virus", wherein scores of tracks in a given genre are adjusted by a specified amount or percentage; and a "Neutron Bomb" or "Atomic Bomb", wherein vote values for all tracks are reduced by a specified amount or percentage.

Levels.

A user's level may be a measure of their degree of participation for example, Level=f(User Activity, Length of Membership), where User Activity includes both routine actions such as voting, and special actions such as participation in contests or other directed activities. Each level may include certain benefits, such as increased income, increased strength of votes and power-ups, and various kinds of social recognition. Users may increase their level in a number of ways, for example when their gross point income reaches certain thresholds, or when they participate in a particular activity, or complete a particular task. There may be a plurality of levels defined, different criteria for moving between them and benefits associated with each level.

Status.

A user's status may be a way of recognizing and indicating their value to the community. It may be based on a number of factors, for example: their voting frequency, their length of membership, their record of voting for winning aired tracks, and their explicit approval by the community. Status may be used just as a social recognition with no tangible benefits, or it may include specific rewards and benefits.

Scheduled Events.

Certain events, including changes in system behavior, may be scheduled to occur at various times, for example: at particular times of the broadcast day, or on special days as specified by the service or station operators. Examples of such events include: vote resets, wherein the station may decide to reset all votes to 0 periodically, in order, for example, to provoke a genre shift, or to clear out a stale playlist; active listener filtering, wherein the station may decide to only count the votes of online listeners during certain parts of the day (for example, to give late-night listeners more control over the playlist, by ignoring votes from daytime-only listeners.)

Ad Integration.

Ad integration server **318** receives for each of item of advertising content an inclusion criterion to be used to determine one or both of whether and how that item of advertising content is to be included in a broadcast. In some embodiments, ad integrations server **318** enables analysis and metrics server **328** to determine an estimate of the current user community for a given broadcast. The ad integration server **318** may request from profile server **320** stored user profile data in profile database **338** to determine and/or estimate demographic data associated with each user. The inclusion criterion may include a target demographic, favored content, disfavored content and prohibited content. Examples of a target demographic include an average age, gender, income, ethnicity, address, geographic location and subnet. For example, an advertiser **114** may wish to create an ad for the Acme University community, in which case a target demographic may include the subnet including domain acme_university.edu, where users with an email address in the domain acme_university.edu, users with a web page in the domain acme_university.edu, and/or users connected via Internet Protocol ("IP") connections using IP addresses associated with acme_university.edu would be included in the target demographic. In some embodiments, the ad is integrated into the broadcast using the media application **320** and/or broadcast platform network interface **336**.

An example of a favored content would be any track from popular artist Joan Smith, that advertiser **114** may wish to co-promote with or co-brand with. An example of a disfavored content would be any track from unpopular artist Jim Jonas, that advertiser **114** may wish to avoid, not be associated with, and/or be disassociated with. An example of a prohibited content would be any track using explicit lyrics, and/or any track from an artist who has used explicit lyrics in the past, where an advertiser **114** (e.g. a children's book company) may wish to prohibit association with.

Inclusion criterion may also include a bid indicating an amount the advertiser (or another entity) would be willing to pay to be included, a bid indicating an amount the advertiser (or another entity) would be willing to pay to be included if an estimated demographic based at least in part on user participation and/or profile data matches a target demographic, a bid indicating a first amount the advertiser (or other entity) would be willing to be included if an estimated demographic based at least in part on user participation and/or profile data matches a target demographic and a second amount the advertiser (or other entity) would be willing to be included if the estimated demographic does not match the target demographic, and a bid of an amount to be included at a targeted time of day.

One example of an inclusion criterion may be an ad wherein an advertiser **114** wants to pay a large amount to be

broadcast to women earning less than $15,000 annually, aged 18-24 and a smaller amount for anyone earning more than $150,000 annually, aged 48-54, and otherwise is not willing to pay anything to be included. Other examples of an inclusion criterion comprises songs, videos or other content that advertisers **114** want to be associated with, not be associated with, disassociated with, or to prohibit association with.

The ad integration server **318** in some embodiments enables analysis and metrics server **328** to assist estimating a current demographic for the current broadcast given the last one or more votes. The inclusion criterion may be updated as this estimated improves and/or changes. In some embodiments, users may vote on ads. In some embodiments, users may use power-ups on ads, for example rockets and bombs may be used on ads. Advertisers **114** may indicate or pay for a bomb invulnerability period of time for their ad, wherein throughout this specification "bomb invulnerability" is defined as the minimum playtime an ad would start with before a user's bomb could be used to remove the ad from the broadcast. Advertisers **114** may indicate an absolute or single use bomb invulnerability that protects the ad from being removed from the broadcast.

The ad integration server **318** may enable feedback from users via user network interface **304** and/or gaming platform **322**. Feedback in various embodiments may include a measurement of user participation, an estimate of user "tuneout", a vote, a bomb, a rocket, and/or a set of complaints. Throughout this specification, "tuneout" refers to a loss or removal of a user from the community, for example by a user turning off their broadcast receiver. A rocket received for an ad may enable the rocketed ad to play in the next available ad slot in the program stream. A bomb received for an ad may enable the bombed ad to be removed after the bomb invulnerability period.

The ad integration server **318** may enable reporting and/or accounting to advertiser **114** using, for example, administration server **314** and/or authentication and payment transaction server **312**. Reporting may include an analysis of the broadcast associated with the broadcasted ad. For example, a report may indicate that at 7:34 pm on Wednesday, Dec. 17, 2008 when the majority of the user community of 49,384 were female and aged 18-24, an ad for a female fitness center was bombed by 24,343 females and 12,522 males after 18 seconds, indicating that at least 36,865 users were exposed to the ad during its bomb invulnerability and reacted to the ad.

The ad integration server **318** may integrate with messaging server **324** and/or text to media server **334**, in part to provide an advertiser **114** with facilities to advertise using social noise or other bumpers/chrome. For example, a social noise sponsored by advertiser **114** "yellow pad.com" might include on a radio broadcast the audio clip generated by text-to-speech server **334** stating "User RedCat7 is searching for pizza using yellow pad.com", followed by a cat's meow which is RedCat7's audio avatar. Sponsored social noise, also known throughout this specification as "third party noise", benefits advertiser **114** "yellow pad.com" with brand awareness and also provides visualization of community activity and promotes it further.

Broadcast Platform Network Interface.

In some embodiments, broadcast platform network interface **336** interfaces with broadcast platform **116** using a broadcast compliant program stream comprising content, playlists, metadata, and playback syntax. In some embodiments in lieu of content, a link to content or an identifier to content is used in order for the content to be directly sent to, received by, or downloaded by the broadcast platform **116** using the link or the identifier. In some embodiments the program stream is written in XML.

FIG. **4** is a block diagram illustrating an embodiment of a broadcast interface for interfacing social broadcasting with a media or broadcast station. In some embodiments, the broadcast platform **116** in FIG. **1** is included in the system shown in FIG. **4**.

Server interface and interpreter **402** couples the social broadcasting server **104** with dynamic playlist **404** and media cache **406**, both of which are coupled with playback engine **408**. Server interface and interpreter **402** is also coupled to emergency override/station interface **410** and webstream interpreter **412**. The emergency override **410** is coupled to a media or broadcast station **118**.

In some embodiments, the social broadcasting system includes a server interface **402** to connect to a network, such as the Internet. A dynamic playlist **404** and updates thereto are received via the server interface **402**, for example from social broadcast server **104**. In some embodiments, interpreter **402** includes a language interpreter or an XML interpreter to parse the content and data from broadcast platform network interface **336** and/or social broadcast server **104**. In some embodiments, a link or identifier is used to download content directly from the server interface or from another network. A media cache **406** is used to cache downloaded content received via server interface **402** which content may be included in the broadcast, if included and if so at a time/slot indicated by dynamic playlist **404**, as updated.

In some embodiments, candidate content may be cached at media cache **406** prior to a final determination being made as to whether such content will be included in the broadcast and if so when, so that content that ultimately is determined to be included in the broadcast is available when it is required. Throughout this specification, a dynamic playlist **404** may include a program stream or an interpreted program stream. In some embodiments, the cache is temporarily or permanently in line with content license guidelines, i.e. statutory licenses, etc. The dynamic playlist **404** and downloaded content in cache **406** are used by playback engine **408** to generate and provide via station interface **410** for broadcast a broadcast stream. The webstream interpreter **412** provides an interpreter for the broadcast stream for webstream output, to substitute or supplement a broadcast output through station interface **410**.

In some embodiments playback engine **408** is an audio playback engine. In some embodiments playback engine **408** is a video playback engine. In some embodiments, audio playback engine **408** performs audio processing on content to be included in the broadcast, for example by adjusting levels, generating fade ins/outs and/or other transitions, etc., as required to provide a content stream that is ready for broadcast without further processing. In some embodiments media cache **406** stores static content such as bumpers, chrome or media clips. Throughout this specification "bumpers" refer to any segue between pieces that may include liners, bumpers, chrome, teasers, IDs, sweeps, sweepers, dry sweepers, station imaging, stingers, identifiers, promos, shotguns, voice overs, and intros. In some embodiments media cache **406** stores content management logic. In some embodiments playback engine **408** provides programmed delay or contingent delay to synchronize external constraints and/or programs.

In some embodiments, an administrative and/or web interface (not shown) is provided to enable settings on broadcast interface in FIG. **4** to be adjusted or tuned, for example, by adjusting an audio level, by adjusting video brightness, adding or removing audio/video effects, controlling the manner

and timing of transitions, setting or tuning content, user participation, or other filters and/or rules, etc.

In some embodiments, the social broadcasting server **104** and/or broadcast interface in FIG. **4** include(s) dynamic and automated play list generation logic, which combines user input, business requirements, regulatory requirements, broadcast quality logic, advertising requirements, gaming requirements and user attributions to generate dynamically a playlist that results in a broadcast that satisfies all requirements.

In some embodiments, web services and tools binding the web interfaces directly to the broadcast device, agnostic to broadcast technology, mediums or protocols, are provided. In some embodiments, time and scheduling synchronization, play list updates, device monitoring and status, playback status, etc. are provided. In some embodiments, real-time or near rear-time events may be coordinate with a broadcast, included in real-time or near real-time in a broadcast, and/or are otherwise supported.

In some embodiments the emergency override stage **410** handles emergency events, for example an Emergency Broadcast System cut-in, that occur outside the control of the social broadcasting system. When such events occur, the social broadcasting system may be notified so that the program stream and/or broadcast stream can be adjusted accordingly.

FIG. **5** is a flowchart illustrating an embodiment of a process to provide social broadcasting. The process may be implemented by user interface **102**, social broadcasting server **104**, and/or broadcast platform **116**.

In step **502**, one or more network communications are received from a plurality of users of the broadcast. The network communications are received via a network other than a broadcast medium via which the broadcast is received by the plurality of users of the broadcast. In some embodiments, the network communications are received via the Internet and/or another public or private computer network and the broadcast is provided via radiofrequency transmission, e.g., a terrestrial or satellite radio or television broadcast. Each network communication indicates a preference of the sending user with respect to inclusion or non-inclusion of a content of the broadcast. In some embodiments, the network communications are received using user interface **102** via the Internet and associated networks. In some embodiments, the preference includes a vote as described for gaming platform server **322**. In some embodiments, the users include media consumers **202**, groups **204**, content providers **108**, promoters **112**, advertisers **114**, and other business partners.

In step **504**, the social broadcasting server **104** processes the network communications to determine a broadcast stream reflective of the users' preference. As subsequent input is received, e.g., from additional users, the broadcast stream is dynamically updated to reflect such subsequent input. For example, a song A may be slated initially for inclusion in the broadcast at an anticipated time t1, based on user input received as of a particular playlist generation time. Subsequently, input received from additional users, e.g., if a surge of users expressed a preference for (or against) the song A subsequent to the time the initial playlist was generated, in some embodiments the playlist would be updated dynamically to reflect such subsequent input by moving the anticipated broadcast time for song A up (or back). As a particular piece of content approaches a time for inclusion in the broadcast, the program stream is provided to broadcast platform **116**. In some embodiments, an algorithm in the gaming platform server **322** or other servers in social broadcasting server **104** is used to select content for broadcast. The program stream may also be determined by other inputs/constraints such as network-owned stations **108**, network affiliates **108**, content providers **108**, regulators **110**, promoters **112**, advertisers **114**, owners, the providers of social broadcasting server **104**, formats of content, an audio library **340**, and playlist constraints.

FIG. **6** is a flowchart illustrating an embodiment of a process to selectively determine advertising for broadcast. The process may be implemented by ad integration server **318**.

In step **602**, for each item of advertising content, an inclusion criterion is received. The inclusion criterion may be received from a third party including: advertiser **114**, an ad relevancy service, an ad network service, an ad broker service, a user, a promoter and an affiliate.

In step **604**, based on an indication that a user was consuming a broadcast within an observation period, e.g. the last five minutes, stored user profile data is processed associated with the user to determine an observed demographic. The observed demographic is matched with the inclusion criterion for each item of advertising content to select and integrate the best matched ads into the broadcast. In an optional step, for each of the best matched ads broadcasted, a report or accounting is sent to the associated third party describing the match and/or observed demographic.

FIG. **7**A is a block diagram illustrating an embodiment of a signal flow model for an audio application. In some embodiments, the audio application associated with signal flow model **702** is the media application **320** in FIG. **3**. In some embodiments, the audio application associated with signal flow model **702** is the playback engine **408** in FIG. **4**.

The following terminology is used for the example of an audio application without loss of generality for other forms of media:

- a "stream" is the program the listener hears on air,
- an "element" is an item that is part of the stream (e.g. song, user-clip, segue clip),
- a "transition" is the change heard between elements (e.g. cut, dissolve),
- a "track" is an element, such as a song or joke, that is experienced as primary content,
- a "clip" is an element, such as a shout-out or signature, that is inserted by the system based on business rules, wherein clips may be attached to other elements, or inserted between them,
- a "stream group" is an ordered collection of elements and transitions, defined by business rules or other core principles, and
- a "channel" is an audio layer within a stream, wherein a stream may consist of one or more channels.

The following definitions are used for element types, for the example of an audio application without loss of generality for other forms of media:

- a "library track" is a track intended as primary content (usually a song), typically contributed by content owners **108**, or by users if approved by a content owner **108** and/or regulators **110**,
- a "station clip" is non-song content contributed by a station or affiliate (e.g. ads, public service announcements ("PSAs"), station identifications, and/or local promos),
- an "ad clip" is an advertisement or other similar content (e.g. PSAs), contributed by a station or advertisers **114**,
- a "social broadcasting service clip" is contributed by the social broadcasting service of non-song content (e.g. a clip of a bomb explosion for a bomb power-up, a call tone to encourage users to contribute, etc),
- a "user track" is contributed by users through user interface **102**, for example songs or jokes,

a "user clip" is user-contributed content meant to be attached to a particular song (e.g. shout-outs),

a "signature", "audio icon" or "audio avatar" is user-contributed and/or selected clip meant to identify a listener, not necessarily targeted for any particular song,

a "segue clip" is a clip heard between two other elements, serving to bridge them. For example, in the following sequence:

{SONG|<Cut>|BOMB_EFFECT|<Cut>|BOMB_EXPLAIN|<Crossfade>|SONG},

BOMB_EFFECT is a segue clip, <Crossfade> is a transition, and a segue group may also be defined, combining segue clips and transitions.

In some embodiments, a stream is assembled from three "buckets":

Tracks: These are the items the listeners vote on. They include library tracks and user tracks,

Clips: These are the items inserted into the stream based on business rules. They include station clips, add clips, social broadcasting service clips, user clips, signatures and segue clips,

Transitions: These are the audio experiences heard between tracks and/or clips. They include cuts and cross-fades.

In some embodiments, the rules for assembly are based on the following principles:

The tracks are inserted into the stream based on user activity (such as voting), but may be adjusted or overridden based on business rules (such as restrictions from regulators **110** or FCC regulations), and

Clips and transitions are inserted into the stream based on business rules, addressing at least: Audio design principles (e.g. beat-matching or beat-mismatch masking), regulations from regulators **110**, and station policies.

In some embodiments, the stream may consist of one or more channels. The primary channel contains the main program content, such as songs and user tracks. Additional channels may be added to support elements, such as sound effects, that would be heard mixed-in with the primary channel.

In the example shown in FIG. **7**A,

E_n is an audio element, provided by a library,

G_n is a gain controller, to control the volume of the associated element, for example to control cross-fades,

FX_n is an effects processor, to apply audio effects to the associated element,

G_mix is a gain controller applied to the output stream, and

FX_mix is an effects processor applied to the output stream.

The gain and effects modules may be treated as a single processing module if that is convenient. The modules shown are in turn controlled by a master audio sequencer/controller, which is responsible for controlling the order of elements played, and the processing applied to them over time, based on business rules.

In some embodiments, a partial list of audio effects includes: graphic equalization, pan/expand, dynamics (frequency specific gain), noise gate/snipper, pitch, envelope, reverb, chorus, flange (wah-wah), distortion, delay/echo, and vibrato.

FIG. **7**B is a block diagram illustrating an embodiment of a sample stream excerpt. The sample stream excerpt **752** is based on the signal flow model for the audio application in FIG. **7**A. In some embodiments, the audio application is the media application **320** in FIG. **3**. In some embodiments, the audio application is the playback engine **408** in FIG. **4**.

In this example, a song from the library is followed by a sound effect on E_**2** (with a cut transition), which is then cross-faded (see G_**1**, G_**2**) to the next song. A flanging effect FX_**1** is applied to the end of the first song, and graphic equalization FX_**2** is applied to the sound effect to make it sound like it's coming over a phone line. The second song is heard with no effects applied.

Social broadcasting as described herein empowers users to control broadcast content to an extent and in a manner not known before, e.g., by promoting, demoting, preempting, contributing, and otherwise directly influencing the content of a broadcast. By monitoring the user community, ads may be better selected to meet the community's needs or wants. Social broadcasting also allows users to vote and bomb ads as part of their contribution.

Although the foregoing embodiments have been described in some detail for purposes of clarity of understanding, the invention is not limited to the details provided. There are many alternative ways of implementing the invention. The disclosed embodiments are illustrative and not restrictive.

What is claimed is:

1. A method of using processor to determine advertising content to be included in a broadcast, comprising:

receiving for an item of advertising content an inclusion criterion to be used to determine whether the item of advertising content is to be included in a broadcast;

using the processor to process stored user profile data associated with a plurality of users who provided within an observation period an indication that the user was consuming the broadcast;

using the processor to determine based at least in part on the processing and the inclusion criteria that the item of advertising content is to be included in the broadcast as sponsored social noise;

using the processor to determine a community activity based at least in part on the processing; and

including in the broadcast the item of advertising content as sponsored social noise comprising a sense perceptible indication of the determined community activity.

2. A method as recited in claim **1**, wherein the broadcast includes one or more of: a radio broadcast, a terrestrial radio broadcast, a satellite radio broadcast, a cable radio broadcast, and a digital radio broadcast.

3. A method as recited in claim **1**, wherein the broadcast includes one or more of: a television broadcast, a terrestrial television broadcast, a satellite television broadcast, a cable television broadcast, and a digital television broadcast.

4. A method as recited in claim **1**, wherein the stored user profile data associated with the plurality of users includes demographic data associated with each user.

5. A method as recited in claim **1**, wherein the inclusion criterion includes a target demographic.

6. A method as recited in claim **5**, wherein the target demographic includes one or more of: an average age, a gender, an income level, and an ethnicity.

7. A method as recited in claim **5**, wherein the target demographic includes one or more of: an address, a geographic location, an area, and a subnet.

8. A method as recited in claim **1**, wherein the inclusion criterion includes one or more of: a favored content, a disfavored content, and a prohibited content.

9. A method as recited in claim **1**, wherein the inclusion criterion includes one or more of: a bid of an amount willing to pay to be included, a bid of an amount willing to pay to be included for a target demographic, and a bid of an amount to be included at a targeted time of day.

10. A method as recited in claim **1**, wherein the inclusion criterion is received from a third party including one or more

of: an ad relevancy service, an ad network service, an ad broker service, an advertiser, a user, a promoter, and an affiliate.

11. A method as recited in claim **1**, wherein the inclusion criterion is dynamically updated.

12. A method as recited in claim **1**, wherein an item of advertising content includes a time value for a minimum playtime an ad would start with before a user's special right could be used to remove the ad from the broadcast.

13. A method as recited in claim **1**, further comprising receiving feedback associated with the item of advertising content.

14. A method as recited in claim **13**, wherein the feedback includes one or more of: a measurement of user participation, an estimation of user tuneout, a vote, a user's special right, and a set of complaints.

15. A method as recited in claim **1**, further comprising receiving a rocket associated with a rocketed item of advertising content from a rocketing user, wherein a rocket is a special right that entitles a holder of the special right to advance the rocketed item of advertising content to be next played on the broadcast.

16. A method as recited in claim **1**, further comprising reporting to a party associated with a broadcasted item of advertising content an analysis of the broadcast associated with the broadcasted item of advertising content.

17. A social broadcasting server, comprising:

a user network interface;

a broadcast platform network interface;

an analysis and metrics server, coupled with the user network interface, and configured to:

process stored user profile data from a profile database associated with a plurality of users who provided within an observation period an indication that the user was consuming the broadcast; and

report analytic results to an ad integration server;

the ad integration server, coupled with the user network interface and configured to:

receive for an item of advertising content and via the user network interface an inclusion criterion to be used to determine whether the item of advertising content is to be included in a broadcast;

determine based at least in part on the processing of stored user profile data and the inclusion criteria that the item of advertising content is to be currently included in the broadcast as sponsored social noise; and

determine a community activity based at least in part on the processing; and

a media application, coupled with the ad integration server and the broadcast platform network interface, and configured to:

include in the broadcast the item of advertising content as sponsored social noise comprising a sense perceptible indication of the determined community activity via the broadcast platform network interface.

18. A social broadcasting server as recited in claim **17**, wherein the broadcast includes one or more of: a radio broadcast, a terrestrial radio broadcast, a satellite radio broadcast, a cable radio broadcast, and a digital radio broadcast.

19. A social broadcasting server as recited in claim **17**, wherein the broadcast includes one or more of: a television broadcast, a terrestrial television broadcast, a satellite television broadcast, a cable television broadcast, and a digital television broadcast.

20. A social broadcasting server as recited in claim **17**, wherein the stored user profile data associated with the plurality of users includes demographic data associated with each user.

21. A social broadcasting server as recited in claim **17**, wherein the inclusion criterion includes one or more of: a target demographic, favored content, disfavored content and prohibited content.

22. A social broadcasting server as recited in claim **21**, wherein the target demographic includes one or more of: an average age, gender, income and ethnicity.

23. A social broadcasting server as recited in claim **21**, wherein the target demographic includes one or more of: an address, geographic location, area, and subnet.

24. A social broadcasting server as recited in claim **17**, wherein the inclusion criterion includes one or more of: a bid of an amount willing to pay to be included, a bid of an amount willing to pay to be included for a target demographic, and a bid of an amount to be included at a targeted time of day.

25. A social broadcasting server as recited in claim **17**, wherein the inclusion criterion is received from a third party including one or more of: an ad relevancy service an ad network service, an ad broker service, an advertiser, a user, a promoter and an affiliate.

26. A social broadcasting server as recited in claim **17**, wherein the inclusion criterion is dynamically updated.

27. A social broadcasting server as recited in claim **17**, further comprising receiving feedback associated with the item of advertising content.

28. A social broadcasting server as recited in claim **17**, wherein the feedback includes one or more of: a measurement of user participation, an estimation of user tuneout, a vote, a special right, and a set of complaints.

29. A social broadcasting server as recited in claim **17**, further comprising an administration server coupled with the ad integration server and configured to report to a party associated with a broadcasted item of advertising content an analysis of the broadcast associated with the broadcasted item of advertising content.

30. A computer program product for determining advertising content to be included in a broadcast, the computer program product being embodied in a tangible, non-transitory computer readable storage medium and comprising computer instructions for:

receiving for an item of advertising content an inclusion criterion to be used to determine whether the item of advertising content is to be included in a broadcast;

processing stored user profile data associated with a plurality of users who provided within an observation period an indication that the user was consuming the broadcast; and

determining based at least in part on the processing and the inclusion criteria that the item of advertising content is to be included in the broadcast as sponsored social noise;

determining a community activity based at least in part on the processing; and

including in the broadcast the item of advertising content as sponsored social noise comprising a sense perceptible indication of the determined community activity.

* * * * *