(No Model.) 2 Sheets—Sheet 1.

# W. R. MORGAN & C. S. OSBORN.

## FOLDING TABLE.

No. 476,400. Patented June 7, 1892.

Fig. 1.

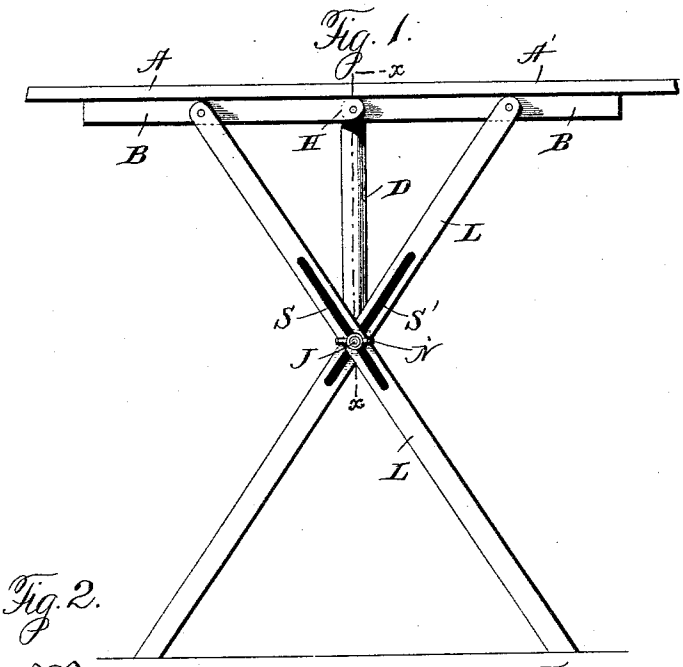


Fig. 2.

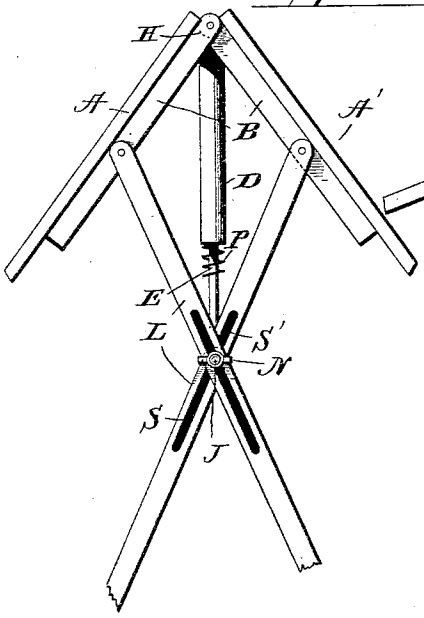


Fig. 3.

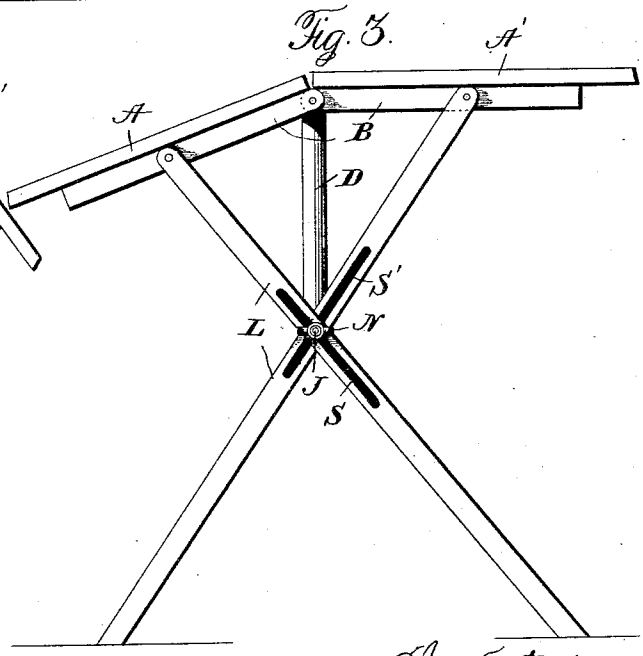


Witnesses:
Jas. E. Hutchinson.
J. A. Rutherford.

Inventors
Wm. R. Morgan and Clinton S. Osborn,
by Edward Taggart, atty.

THE NORRIS PETERS CO., PHOTO-LITHO., WASHINGTON, D. C.

(No Model.) 2 Sheets—Sheet 2.

# W. R. MORGAN & C. S. OSBORN.

## FOLDING TABLE.

No. 476,400. Patented June 7, 1892.

Fig. 4

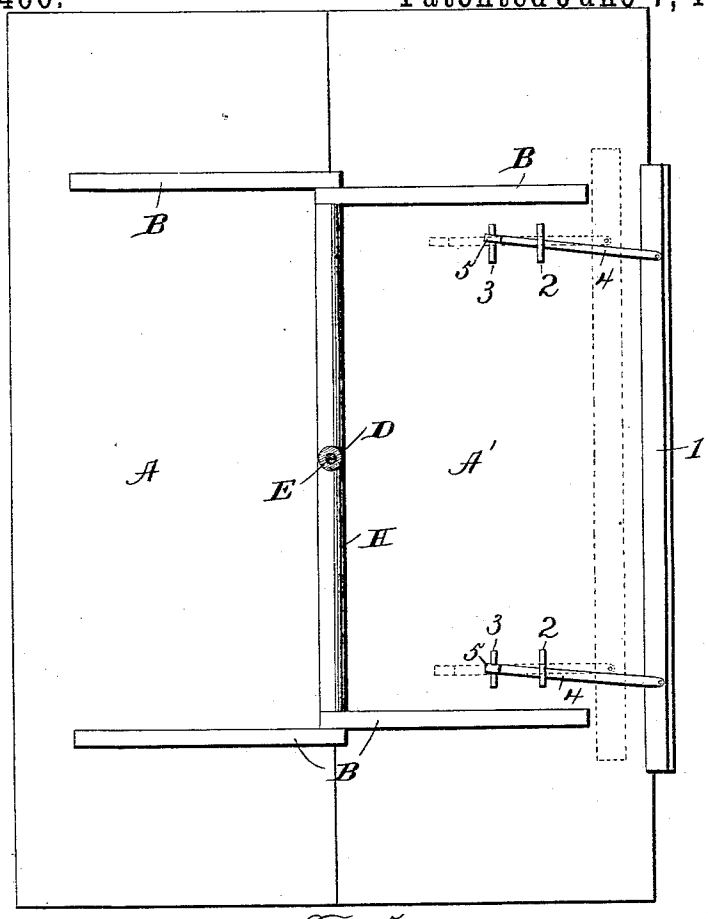


Fig. 5.

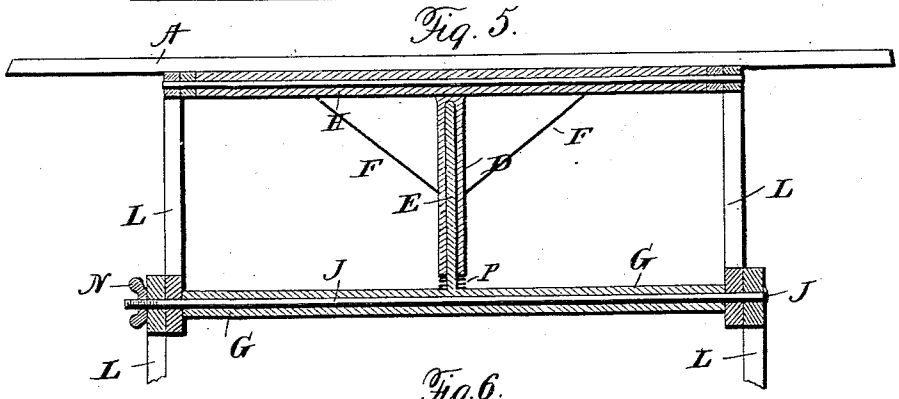


Fig. 6.

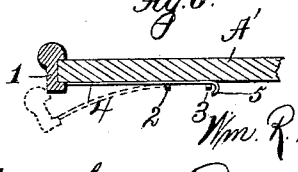


Witnesses:
Jas. E. Hutchinson
J. A. Rutherford.

Inventors.
Wm. R. Morgan and Clinton S. Osborn,
by Edward Taggart, atty.

THE NORRIS PETERS CO., PHOTO-LITHO., WASHINGTON, D. C.

# UNITED STATES PATENT OFFICE.

WILLIAM R. MORGAN AND CLINTON S. OSBORN, OF GRAND RAPIDS, MICHIGAN; SAID MORGAN ASSIGNOR TO SAID OSBORN.

## FOLDING TABLE.

SPECIFICATION forming part of Letters Patent No. 476,400, dated June 7, 1892.

Application filed August 25, 1891. Serial No. 403,724. (No model.)

*To all whom it may concern:*

Be it known that we, WILLIAM R. MORGAN and CLINTON S. OSBORN, citizens of the United States, residing at the city of Grand Rapids, in the county of Kent and State of Michigan, have invented certain new and useful Improvements in Folding Tables, of which the following is a specification.

This invention relates to a folding table in which the two leaves may be partially folded so as to form a desk or may be folded so as to form a drawing or other form of table.

The object of our invention is to construct a table which can be folded so as to occupy but little space and which may be adjusted for various purposes, as hereinafter fully described. These objects we accomplish by means of the mechanism illustrated in the accompanying drawings, in which—

Figure 1 shows an end elevation of a table constructed in accordance with our invention, with the leaves opened, so as to form a flat horizontal surface. Fig. 2 also shows an end view with the leaves partially folded. Fig. 3 shows an end view with one leaf dropped down in position to be used as a writing-desk. Fig. 4 shows a plan view of the under side of the table, with the bracket removed in order to show the method of hinging the table-leaves and also the method of applying the desk-strip. Fig. 5 shows a sectional view on the line *xx* of Fig. 1; and Fig. 6 shows a cross-section of a part of the table-leaf, with the desk-strip in position when in use.

Similar letters and figures refer to similar parts throughout the several views.

A and A′ represent the leaves. To the under side of the leaves for convenience we apply cleats B B.

L L represent the legs of the table, there being two at either end and crossed, as shown in Fig. 1. These legs are pivoted to the leaves A and A′, or to the braces B B, attached to the leaves A and A′, and also are pivoted at the crossing upon the rod J, which rod J passes through the brace G. The rod J is provided with a head at one end and a screw-thread and nut at the other end, by means of which the cross-legs may be tightened when desired. A cross-rod H is pivoted to the cleats B B B B, thereby forming a hinge for the leaves. The pivot or bolt which attaches the cleats B B to the rod H may extend entirely through the rod or may be short pieces extending through the ends of the cleats B B into the rod. By this construction the rod H is held in contact with the inner edges of the leaves, thereby preventing the same from warping and holding them securely in position, both when folded and when open.

D is a brace or bracket, preferably stayed with braces F F to secure the same in position. The brace D is securely attached to the rod H and has an opening through it for the reception of the guide-rod E, which is securely attached to the cross-piece G. When the table is open, the lower end of the brace D rests upon the cross-piece G; but when the table is folded the brace D is raised into the position shown in Fig. 2, drawing off from the rod E, the rod E serving as a guide to hold or support the part D in position. The lower end of the part D is preferably provided with a spring, so that as the leaves are opened and the part D is lowered the spring will engage with the brace G for the purpose of avoiding the shock which would otherwise occur by the part D suddenly striking this cross-brace. This spring may be of any suitable form or shape. One form is shown by P in Fig. 2. The bolt or pivot which binds the legs together passes through the slots in the legs, which slots are shown by S and S′. These slots may be of any suitable length, and are of the same size and length in both sets of legs.

In dropping the leaf as shown in Fig. 2 the bolts move in the slots. In dropping the leaf as shown in Fig. 3 the leg attached to the leaf which is dropped moves upon the bolt, so as to leave one leaf, as A, at an incline, while the other leaf, as A′, is in a horizontal position. By raising the leaf A′ the leaves A and A′ may be set in the same plane, as is shown by the leaf A in Fig. 3, or at any desirable angle with each other—that is, both leaves may be set at an incline in either direction, both leaves may be set so that they incline in opposite directions, or both leaves may be set in the same horizontal plane, or both at any desirable angle with each other.

In using our invention for a table the leaves

 Hangzhou Taihe & Ningbo Likeju Exhibit 1004

would preferably be set in a horizontal plane, as shown in Fig. 1. In using the same for a desk one leaf might be dropped into the position shown by A in Fig. 3. In using the same for a drawing-table the whole top could be inclined.

The size and form of the table may be varied to suit the user; but we deem our invention peculiarly applicable to light tables, which can be easily folded and packed away when not in use.

To the under side of the table-leaf A we attach loops 2 2 and loops 3 3, and a desk-strip 1 is attached by screws or pivots to the ends of elastic arms 4, adapted to slide longitudinally through the loops 2 and provided at their inner extremities with hooks or otherwise constructed to form suitable stops 5 to permit the outward sliding movement of such elastic arms. The arms are elastic in order that they can be pressed downward, as indicated by dotted lines, Fig. 6, for the purpose of placing the strip 1 under the table-leaf A′. By drawing the elastic arms 4 in an outward direction the strip 1 is moved outward past the edge of the table-leaf A′, and under the elasticity of the arms 4 such strip 1 will be moved upward into such position that if the strip be moved lengthwise the arms 4 will cause the strip to move inward and bear against the edge of the table-leaf A′. This operation occurs by reason of the fact that when the arms 4 are moved outward the hooks or stops 5 engage the loops 3, and consequently when the strip 1 is moved lengthwise the arms 4 swing in the arcs of circles and the pivotal points of such arms, with the strip 1, approach the edge of the table-leaf A′, thereby causing such strip to press against the edge of the table-leaf. By moving the strip 1 lengthwise in the opposite direction such strip will be adjusted slightly away from the edge of the table-leaf A′, and then by depressing the strip, as in dotted lines, Fig. 6, such strip can be moved beneath the table-leaf A′, as indicated by dotted lines, Fig. 4.

Having thus described our invention, what we claim to have invented, and desire to secure by Letters Patent, is—

1. The combination of the leaves provided with cleats, a cross-rod to the ends of which the cleats are pivoted, the cross-legs pivoted to the cleats and provided with slots, a cross-piece having pivots extending through the slots in the legs, and a clamping-nut engaging one of the pivots, said leaves adapted to fold with the legs and to unfold and be held in different positions, substantially as described.

2. In a folding table, the combination of the cross-rod, the pair of leaves pivotally connected with the ends of the cross-rod, the cross-legs pivotally connected to the leaves and having longitudinally-slotted portions, the cross piece or brace having end pivots extending through the longitudinal slots in the legs, a center bracket attached to the cross-rod, to which the leaves are pivoted, and adapted to rest upon the cross piece or brace, and means for rigidly clamping the legs one upon the other at their slotted portions, substantially as described.

3. In a folding table, the combination of a cross-rod, a pair of table-leaves having cleats pivoted to the ends of the cross-rod, the cross-legs pivoted to the cleats, the cross piece or brace pivotally connecting the cross-legs, the vertical bracket secured to the cross-rod to which the cleats are pivoted, and a vertical guide-rod secured to the cross piece or brace and on which guide-rod the bracket slides vertically, substantially as described.

4. In a folding table, the combination of a cross-rod, a pair of table-leaves having cleats pivoted to the ends of the cross-rod, the cross-legs pivoted to the cleats, the cross piece or brace pivotally connecting the cross legs, the tubular support attached to the cross-rod to which the cleats are pivoted, and the guide-rod secured to the cross piece or brace and entering the tubular support when the latter descends, substantially as described.

5. In a folding table, the combination of crossing legs, each having a longitudinal slot, a cross piece or brace having pivots which extend through the slotted portions of the legs, means for clamping the slotted portions of the legs rigidly to the cross piece or brace, a cross-rod, a pair of table-leaves provided with cleats, which are pivoted to the ends of the cross-rod and to the upper extremities of the cross-legs, a vertical guide-rod secured to the cross piece or brace, and a bracket secured to the cross-rod and sliding upon the guide-rod, substantially as described.

6. In a folding table, the combination of the hinged leaves A A′, the bracket D, the cross-legs L, the cross-brace G, the vertical guide-rod E, on which the bracket slides, and the spring P, arranged under the bracket, substantially as described.

7. In a folding table, the combination of the independently-swinging leaves A A′, the cross-rod H, with the ends of which the leaves are pivotally connected, the cross-legs L, having longitudinal slots, the cross-brace G, having pivots passing through the slots and moving therein, and means for clamping the legs together, whereby either table-leaf can be inclined independent of the other, substantially as described.

8. In combination with the leaf of a table or desk having loops 2, of the desk-strip 1, having spring-arms 4, passing through the loops and loosely connected with the table or desk, so that they can oscillate and also move lengthwise, substantially as described.

In witness whereof we have hereunto set our hands and seals in the presence of two witnesses.

WILLIAM R. MORGAN. [L. S.]
CLINTON S. OSBORN. [L. S.]

Witnesses:
CLINTON L. DAYTON,
HARRY P. VAN WAGNER.