FOLDING SECTIONAL TOP TABLE

Filed Oct. 19, 1954 2 Sheets-Sheet 1

FIG. 1.

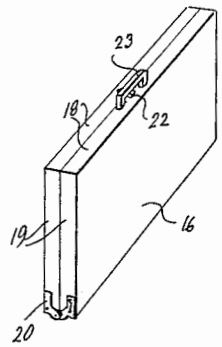

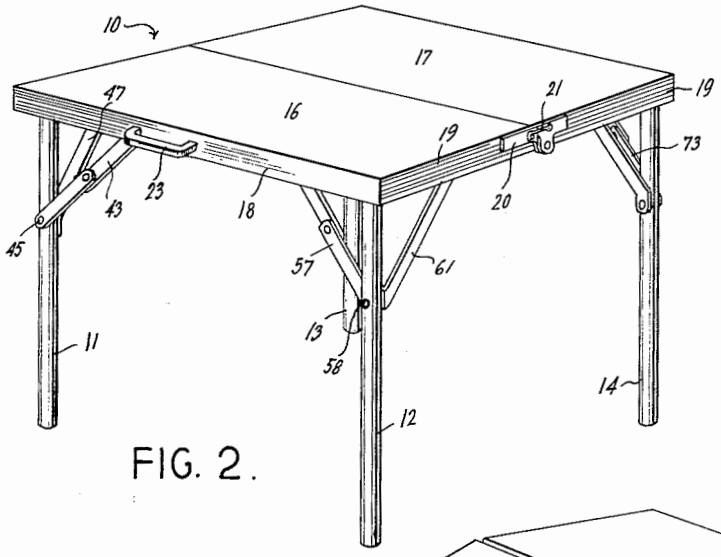

FIG. 2.

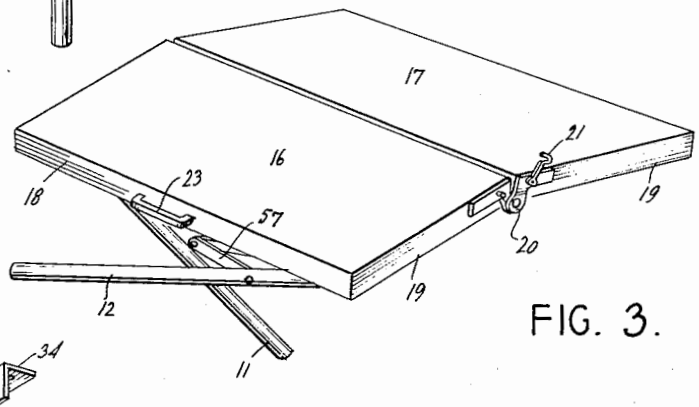

FIG. 3.

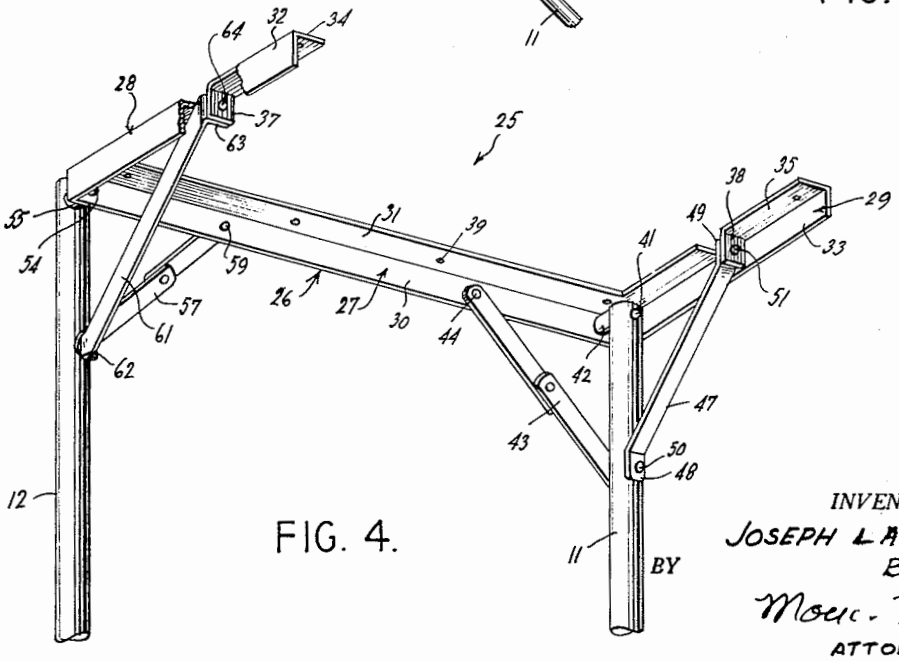

FIG. 4.

INVENTOR.
JOSEPH LANDER BELL
BY
Morris Rhum
ATTORNEYS

FOLDING SECTIONAL TOP TABLE

Filed Oct. 19, 1954 2 Sheets-Sheet 2

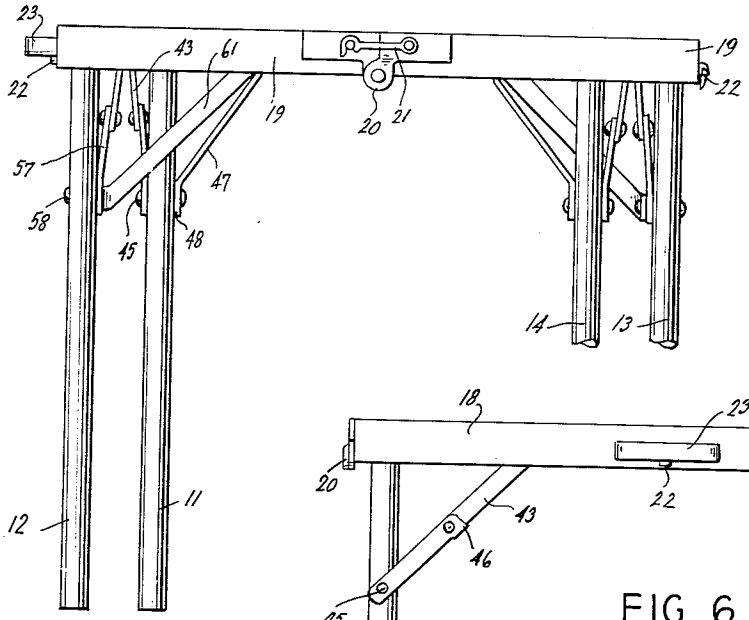

FIG. 5.

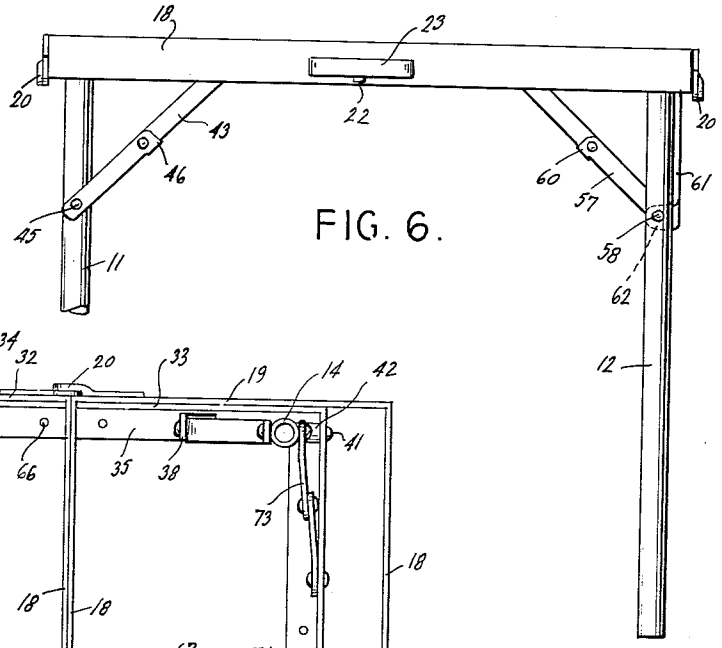

FIG. 6.

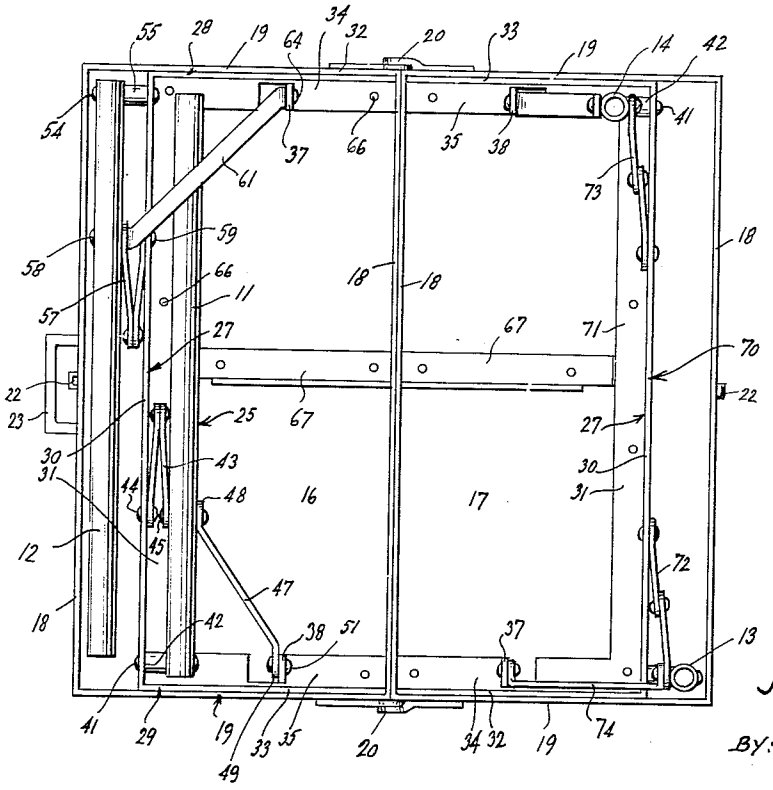

FIG. 7.

INVENTOR.
JOSEPH LANDER BELL
BY: Morse & Rhum
ATTORNEYS

United States Patent Office

2,715,558

Patented Aug. 16, 1955

1

2,715,558

FOLDING SECTIONAL TOP TABLE

Joseph Lander Bell, Staten Island, N. Y., assignor to Portable Tables, Inc., New York, N. Y., a corporation of New York

Application October 19, 1954, Serial No. 463,151

6 Claims. (Cl. 311—90)

This invention relates generally to articles of furniture, and is particularly directed to foldable or collapsible tables and the like.

The particular embodiment of the present invention, which is illustrated in the drawings and which will be described hereinafter in greater detail comprises generally at least one pair of legs pivotally connected to a table top and swingable between an operative, depending position and a collapsed position disposed in side by side relation underlying the table top.

Heretofore, as is well known to those versed in the construction of folding tables, it was considered necessary to fold the table legs either diagonally inwards under the table top, or along the margins of the table top. Hence, tables were collapsible only to the size of the table top, except in the case of extremely large tables. This problem is particularly acute in tables employed for games, picnics and similar uses which must be transported to and from the desired location either manually, or in small vehicles, and which are frequently stored in closets and other relatively small and often congested places.

Accordingly, it is a general object of the present invention to provide a table construction of the type described which overcomes the above mentioned difficulties, and collapses or folds to an extremely small size, occupying substantially 50% at most, the space required by previous folding table constructions of the same erected size. More particularly, the table construction of the present invention permits not only of folding the table legs into the top, but also of folding or doubling the table top upon itself. The instant invention also contemplates the provision of a leg unit adapted for attachment to a sectional table top, to define a table having the above mentioned advantageous characteristics.

It is another object of the present invention to provide a new and improved collapsible table construction having the features and advantages referred to in the foregoing paragraph, which is quick, easy and safe to operate, which eliminates the possibility of accidental collapse, and which in its closed or collapsed condition defines a conveniently portable case completely concealing the table legs and adapted to be employed for containing and carrying various articles, as desired.

It is a further object of the present invention to provide an article of furniture of the type described which is simple and staunch in construction, durable in use, neat and attractive in appearance, and which can be manufactured and sold at a reasonable cost.

Other objects of the present invention will become apparent upon reading the following specification and referring to the accompanying drawings, which form a material part of this disclosure.

The invention accordingly consists in the features of construction, combinations of elements, and arrangements of parts, which will be exemplified in the construction hereinafter described, and of which the scope will be indicated in the appended claims.

2

In the drawings:

Figure 1 is a perspective view showing a table constructed in accordance with the present invention in its collapsed or folded condition;

Fig. 2 is a perspective view showing the table of Fig. 1 in its set-up or operative condition;

Fig. 3 is a perspective view showing the table of Figs. 1 and 2 in an intermediate condition, during the setting up or collapsing operation;

Fig. 4 is a perspective view showing a leg unit constructed in accordance with the present invention, the leg unit being illustrated in operative or open position and partly broken away from clarity of understanding;

Fig. 5 is a side elevational view showing a table construction in accordance with the present invention in set-up condition;

Fig. 6 is a front elevational view showing the table illustrated in Fig. 5; and

Fig. 7 is a bottom plan view showing the table of Fig. 6 in partially collapsed condition, one pair of table legs being folded.

Referring now more particularly to the drawings, the embodiment of the invention illustrated therein comprises a table top, generally designated **10**, and supporting legs **11**, **12**, **13** and **14**.

The table top includes a pair of hollow, complementary sections **16** and **17** hingedly connected together along adjacent sides, and each associated with one pair of legs. That is, the legs **11** and **12** depend from the table top section **16**, while the legs **13** and **14** depend from the table top section **17**.

In the illustrated embodiment, the sections **16** and **17** are generally rectangular in configuration, and each provided with a peripherally extending, depending wall or flange, as at **18** and **19** respectively. Pivotally connecting the sections **16** and **17** together are a pair of hinges **20**, **20** which afford the sections relative movement between the operative, open or relatively flat extended position of Fig. 2 in which adjacent portions of the flanges **18** and **19** are in face to face abutting engagement, and the closed, folded or collapsed position of Fig. 1 in which the undersurfaces of the table top sections are in facing spaced relation and the flanges **18** and **19** in edge to edge engagement about their peripheral extent. A releasable hook and pin, as at **21** may be provided on the members of one hinge **20** to releasably hold the latter, and hence the table top sections in open condition, while a suitable locking device **22** may be provided on the flanges **18** and **19** for releasably holding the sections in their closed condition. If desired, an appropriate handle **23** may be provided on one of the flanges **18** to facilitate manual carrying of the collapsed table.

Secured to the undersurfaces of the sections **16** and **17** are identical leg units, one of which is illustrated in Fig. 4 and generally designated **25**. The leg unit includes a frame generally designated **26**, preferably fabricated of angle stock, and formed to provide an elongated frame member or strap **27** and a pair of parallel spaced, laterally inwardly extending, facing arms **28** and **29**. Specifically, the frame member **27** includes a vertical wall **30** and a horizontal flange **31** extending inwards from the upper edge of the vertical wall. The arms **28** and **29** include vertical walls **32** and **33**, respectively, extending inwards and at right angles to the vertical wall **30**, and horizontal flanges **34** and **35** on the upper edges of the walls **32** and **33**, respectively, extending inwards from and at right angles to the horizontal flange **31**. Portions of the horizontal flanges **34** and **35**, as at **37** and **38**, respectively, are severed and bent downwards, for a purpose appearing hereinafter; and, the horizontal flanges **31**, **34** and **35** are formed with a plurality of spaced, fastener receiving apertures **39**.

EP Family Exhibit 2005

The leg **11** is disposed inwards of the vertical wall **30** and has its upper end pivotally connected, as by a pin **41** to the last named wall, adjacent to one end thereof. The leg **11** is retained inwards of the wall **30** by a tubular spacer **42**; and, the pivot pin **41** is preferably disposed at right angles to the last mentioned wall to mount the leg for swinging movement between its operative, depending position of Fig. 4 and its collapsed position of Fig. 7 disposed on the inner side of and parallel to the wall **30**.

A two link foldable strut **43** has its opposite ends pivotally connected, as at **44** and **45**, to the inner side of the vertical wall **30** and outer side of the leg **11**, respectively, and is disposed at a 45 degree inclination when the leg is in operative position, so as to fold into the space between the vertical wall **30** and leg **11** when the latter is collapsed.

Extending diagonally between the leg **11** and frame arm **29**, and disposed longitudinally, but not laterally in a plane at right angles to the plane of the strut **43** when the leg is in its depending condition, is a rigid strut or bar **47**. The strut **47** has its end portions **48** and **49** bent or angulated with respect to the intermediate, major bar portion so as to be parallel to each other and lie respectively against the inner side of the leg **11** and outer side of the flange portion or tab **38**. The strut end portion **48** may be secured to the leg **11** by the fastener **50**, while the strut end portion **49** is pivotally connected to the tab **38** by a pin **51** disposed in substantial alignment with the pivot pin **41**. It will now be seen that the leg **11** is braced in all directions when in its operative position by the struts **43** and **47** which are arranged in right angularly disposed planes, while swinging movement of the leg about the axis of the pin **41** to its collapsed position alongside of and parallel to the wall **30** is permitted by swinging movement of the strut **47** with the leg about the pin **51**. The strut **47** will thus lie longitudinally in the plane of the leg **11** and its swinging axis at all times, so as to be disposed, with the leg **11**, within the frame walls **30**, **32** and **33** when in collapsed condition. Of course, suitable stop means **46**, see Fig. 6, may be provided on the links of the strut **43** to prevent inadvertent folding or collapse of the latter.

The leg **12** is disposed outwardly of the frame wall **30** and pivotally connected to the latter by a pin **54**, which is substantially parallel to and remote from the pin **41**. Hence, the leg **12** is swingable about the axis of the pin **54**, which is at right angles to the wall **30**, between the operative depending position of Fig. 4, and the closed or collapsed position of Fig. 7, in which the leg is disposed outwardly of and parallel to the wall **30**, being spaced from the latter by the tubular spacer **55**. As best seen in Fig. 7, the legs **11** and **12** are disposed in their collapsed condition in parallel spaced relation on opposite sides of the frame wall **30** so as to occupy a relatively small space.

A two link foldable strut or brace **57** extends between the leg **12** and wall **30**, defining substantially 45° angles therewith when the leg is open, and has its opposite ends pivotally connected to the inner side of the leg **12** and the outer side of the wall **30** by pivot pins **58** and **59**, respectively. As best seen in Fig. 7, the strut **57** is foldable upon closing movement of the leg **11** into the space between the leg and the frame wall **30**. A rigid bar or strut **61** extends diagonally between the leg **12** and frame arm **28** and is disposed, both longitudinally and laterally in a plane parallel to the plane defined by the leg **12** and pivotal axis **54**. Further, the end portions **62** and **63** of the strut **61** are bent toward the frame arm **29**, both lying in planes parallel to the strut **57** and wall **30**. The strut end portion **62** is secured to the inner side of the leg **12**, as by the previously mentioned pin **58**, and the strut end **63** is disposed in facing engagment with respect to the outer side of the flange portion or tab **37** and pivotally connected to the latter by a pin **64** disposed coaxially with the pin **54**.

Viewed otherwise, the strut end portions **62** and **63** are disposed in parallel planes and secured in facing relation with respect to the inner side of the leg **11** and outer side of the tab **37**, respectively; and, the intermediate strut portion extends between the outer edges of the end portions so as to be offset outwards, away from the frame arm **29**.

As mentioned in connection with leg **11**, the struts **57** and **61** of leg **12** are disposed in planes at substantially right angles when the last mentioned leg is open, so that the struts afford maximum firmness and bracing to the leg. Here again, suitable stop means **60**, see Fig. 6, are preferably provided on the links of the foldable strut **57** to prevent inadvertent collapse of the latter.

As the pivot pin **64** is in alignment with the pivot pin **54**, it will be seen that the strut **61** swings with the leg **12** upon opening and closing movement of the latter about the aligned axes of the pins **54** and **64**. In addition, the heretofore described outwardly offset construction of the rigid strut **61** permits complete closing movement of the leg **12** into parallel relation with the frame wall **30** outwardly thereof. That is, the strut **61** extends transversely across and below the wall **30** when the leg **12** is in its collapsed condition; and, where the legs are of such strength and spacing as in the illustrated embodiment, the strut **61** will also extend transversely across and below the leg **11** when both legs are in their collapsed condition.

As best seen in Fig. 7, the entire leg unit frame **26** is disposed within one of the table top sections **16** with the elongated frame member **27** disposed parallel to the axis of the hinges **20** and spacedly within the peripheral wall **18**. Suitable fasteners **66** may be inserted through the holes **39** to secure the flanges **31**, **34** and **35** directly to the underside of the table top section **16**. If desired, an additional bar of angle stock **67** may be secured to the underside of the table top section **16** spaced between the frame arms **28** and **29** for increased rigidity and staunchness.

An additional leg unit, generally designated **70**, including a frame **71** and the legs **13** and **14**, is constructed and is fixed secured to the underside of the table top section **17** in the same manner as described in connection with the leg unit **25**.

In order to set up the table of the present invention, it is only necessary to swing the table top sections **16** and **17** apart from the position of Fig. 1 to that of Fig. 3, whereupon the legs **11**, **12**, **13** and **14** will fall to their depending, operative position in which they may be locked by the foldable struts **43** and **57**, and the corresponding foldable struts **72** and **73** of the leg unit **70**. The table top sections may be positively retained in their open or extended relation by securement of the hook and pin **21**, best seen in Fig. 5.

To collapse the table, it is only necessary, after release of the hook **21** and the struts **43**, **57**, **72** and **73**, to swing the legs of each leg unit about their respective pivotal connections into the hollow of the associated table top section. In order to insure collapse of the legs completely into the table top sections, it is of course necessary to collapse the legs **11** and **14** prior to collapsing the legs **12** and **13**, as the offset strut **61** of the leg **12** is adapted to underlie and extend across the frame member **27** and leg **11**, while the offset strut **74** of the leg **13** is adapted to underlie and extend across the frame member **71** and leg **14**, when all of the legs are in their collapsed condition (Fig. 4). With the leg units **25** and **70** each collapsed entirely within its associated hollow table top section, the sections may then be swung about their hinged connection into closed, edge to edge engagement, see Fig. 1, for ease of carrying and economy of space in storage.

In its folded condition, the sections **16** and **17** of the table top **10** combine to provide a neat and attractive, entirely closed casing which completely conceals and protects the leg units, and which is adapted to contain a variety of particles, such as may be used with the table, or otherwise.

From the foregoing, it is seen that the present invention provides a collapsible table construction which fully accomplishes its intended objects, and which is well adapted to meet practical conditions of manufacture and use.

Although the present invention has been described in some detail by way of illustration and example for purposes of clarity of understanding, it is understood that certain changes and modifications may be made within the spirit of the invention and scope of the appended claims.

What is claimed is:

1. A foldable table, comprising a pair of hinged top sections relatively foldable from extended co-planar positions to retracted side by side positions, each of said sections comprising a frame, a pair of table legs pivotally connected individually at their upper ends to each of said frames, respectively, and individually foldable from extended or table supporting positions to retracted positions in which they lie parallel to each other and to the pivotal axis of said hinged sections, each of said section frames having a part disposed adjacent the end of the section remote from and parallel to the line of fold of said sections and also having parts adjacent the opposite sides, respectively, of the companion section extending perpendicularly to said line of fold, and double leg-bracing means for each leg foldable therewith in relation to the companion frame section to and from leg-retracted and leg-extended positions, said double leg-bracing means for each leg comprising a pair of members one of which is secured to the companion leg and to the adjacent one of said last mentioned parts of the frame section so as to brace the leg, in the extended condition thereof, against movement transversely of said line of fold, and the other of said pair of members being secured to said first mentioned part of the companion frame section and to the leg to brace the leg, in the extended condition thereof, against movement parallel to said line of fold.

2. A foldable table, comprising a pair of hinged top sections relatively foldable from extended co-planar positions to retracted side by side positions, each of said sections comprising a frame, a pair of table legs pivotally connected individually at their upper ends to each of said frames, respectively, and individually foldable from extended or table supporting positions to retracted positions in which they lie parallel to each other and to the companion section frame, each of said section frames having a part disposed adjacent the end of the section remote from and parallel to the line of fold of said sections and also having parts adjacent the opposite sides, respectively, of the companion section extending perpendicularly to said line of fold, and double leg-bracing means for each leg foldable therewith in relation to the companion frame section to and from leg-retracted and leg-extended positions, said double leg-bracing means for each leg comprising a pair of members one of which is secured to the companion leg and to the adjacent one of said last mentioned parts of the frame section so as to brace the leg, in the extended condition thereof, against movement transversely of said line of fold, and the other of said pair of members being secured to said first mentioned part of the companion frame section and to the leg to brace the leg, in the extended condition thereof, against movement parallel to said line of fold, said one of said leg-bracing members being pivotally connected to the aforesaid companion frame part for coaxial pivotal movement with the companion leg, and the other of said leg-bracing members being connected to said other frame part on a pivot axis spaced from and parallel to the pivot axis of the companion leg.

3. A foldable table, comprising a pair of hinged top sections relatively foldable from extended co-planar positions to retracted side by side positions, each of said sections comprising a frame, a pair of table legs pivotally connected individually at their upper ends to each of said frames, respectively, and individually foldable from extended or table supporting positions to retracted positions in which they lie parallel to each other and to the pivotal axis of said hinged sections, each of said section frames having a part disposed adjacent the end of the section remote from and parallel to the line of fold of said sections and also having parts adjacent the opposite sides, respectively, of the companion section extending perpendicularly to said line of fold, and double leg-bracing means for each leg foldable therewith in relation to the companion frame section to and from leg-retracted and leg-extended positions, said double leg-bracing means for each leg comprising a pair of members one of which is secured to the companion leg and to the adjacent one of said last mentioned parts of the frame section so as to brace the leg, in the extended condition thereof, against movement transversely of said line of fold, and the other of said pair of members being secured to said first mentioned part of the companion frame section and to the leg to brace the leg, in the extended condition thereof, against movement parallel to said line of fold, said first mentioned frame part comprising a strap disposed edgewise of the companion top section, said two legs of the companion top section lying at opposite sides, respectively, of said strap longitudinally thereof, when said legs are in said retracted positions, and said other of said bracing members comprising a pair of toggle links which, in the collapsed condition of the toggle and in the retracted position of the companion leg, lie parallel to each other between the companion leg and the adjacent side of said strap.

4. A foldable table, comprising a pair of hinged top sections relatively foldable from extended co-planar positions to retracted side by side positions, each of said sections comprising a frame, a pair of table legs pivotally connected individually at their upper ends to each of said frames, respectively, and individually foldable from extended or table supporting positions to retracted positions in which they lie parallel to each other and to the pivotal axis of said hinged sections, each of said section frames having a part disposed adjacent the end of the section remote from and parallel to the line of fold of said sections and also having parts adjacent the opposite sides, respectively, of the companion section extending perpendicularly to said line of fold, and double leg-bracing means for each leg foldable therewith in relation to the companion frame section to and from leg-retracted and leg-extended positions, said double leg-bracing means for each leg comprising a pair of members one of which is secured to the companion leg and to the adjacent one of said last mentioned parts of the frame section so as to brace the leg, in the extended condition thereof, against movement transversely of said line of fold, and the other of said pair of members being secured to said first mentioned part of the companion frame section and to the leg to brace the leg, in the extended condition thereof, against movement parallel to said line of fold, and horizontal table-surface forming parts fixed to said frame sections, respectively, and having depending outer edge flanges pivotally connected together to provide the hinge for said top hinged sections, and releasable interengageable means on said flanges, respectively, for releasably holding said top sections against relative pivotal movement.

5. A foldable table, comprising a pair of hinged top sections relatively foldable from extended co-planar positions to retracted side by side positions, each of said sections comprising a frame, a pair of table legs pivotally connected individually at their upper ends to each of said frames, respectively, and individually foldable from extended or table supporting positions to retracted positions in which they lie parallel to each other and to the pivotal axis of said hinged sections, each of said section frames having a part disposed adja-

cent the end of the section remote from and parallel to the line of fold of said sections and also having parts adjacent the opposite sides, respectively, of the companion section extending perpendicularly to said line of fold, and double leg-bracing means for each leg foldable therewith in relation to the companion frame section to and from leg-retracted and leg-extended positions, said double leg-bracing means for each leg comprising a pair of members one of which is secured to the companion leg and to the adjacent one of said last mentioned parts of the frame section so as to brace the leg, in the extended condition thereof, against movement transversely of said line of fold, and the other of said pair of members being secured to said first mentioned part of the companion frame section and to the leg to brace the leg, in the extended condition thereof, against movement parallel to said line of fold, said first mentioned frame part comprising a strap disposed edgewise of the companion top section, said two legs of the companion top section being pivotally connected to opposite sides of said strap, and each of said other of said bracing members being pivotally secured to the same side of said strap to which its associated leg is secured.

6. A foldable table comprising a pair of hinged top sections relatively foldable from extended co-planar positions to retracted side by side positions, a frame provided at the inner surface of each of said sections, said frame comprising an elongated portion extending substantially parallel to the fold line of said sections and spaced laterally thereof and laterally spaced frame portions extending from said elongated portion toward said fold line, a pair of legs pivotally mounted at opposite sides, respectively, of said elongated frame portion

adjacent said extending portions, respectively, first brace means pivotally interconnecting each leg and the side of said elongated frame portion to which said leg is mounted, and second brace means pivotally interconnecting each leg and the adjacent extending frame portion, said second brace means each being connected to the inner side of the associated leg, one of said first brace means being connected between the inner side of the elongated frame portion and the outer side of associated leg, and the other of said first brace means being connected between the outer side of said elongated frame portion and the inner side of the associated leg, the second brace means associated with said one first brace means being disposed longitudinally but not laterally in a plane substantially at right angles to the plane of said one first brace means, and the second brace means associated with the other of said first brace means being disposed both longitudinally and laterally in a plane parallel to the plane defined by the leg to which it is connected and the pivotal axis of the pivotal connection of said last mentioned leg to said elongated frame portion.

References Cited in the file of this patent

UNITED STATES PATENTS

1,491,568	Tepper	Apr. 22, 1924
1,812,196	Brown	June 30, 1931
1,920,577	Malinowski	Aug. 1, 1933
2,362,116	Covell	Nov. 7, 1944
2,508,627	Spiegel et al.	May 23, 1950

FOREIGN PATENTS

1,020,718	France	Feb. 10, 1953