Paper No. 21
Dated: November 30, 2020

UNITED STATES PATENT AND TRADEMARK OFFICE

BEFORE THE PATENT TRIAL AND APPEAL BOARD

COOLIT SYSTEMS, INC.,
Petitioner,

v.
ASETEK DANMARK A/S,
Patent Owner.

Case No. IPR2020-00523
U.S. Patent No. 10,078,354

PATENT OWNER'S RESPONSE

TABLE OF CONTENTS

I. Preliminary Statement 1

II. The '354 patent 2

III. Claim Construction 6

IV. Petition Prior Art 7

A. Batchelder 7

B. Shin 12

C. Cheon 14

V. Ground 1 of the Petition Does Not Establish Obviousness of Claims 1, 8, or 15 Based on Batchelder and Shin 15

A. Batchelder in view of Shin does not disclose "the lower chamber includes a plurality of channels configured to … direct the cooling liquid from the central region toward the perimeter of the lower chamber" as required by claim 1 16

1. Batchelder does not disclose flow of cooling liquid from a central region of its alleged "lower chamber" towards the perimeter; rather, Batchelder discloses the opposite flow direction 18

2. Nor does Shin disclose flow of cooling liquid from a central region of its alleged "lower chamber" towards the perimeter 25

3. There is no motivation, or reasonable expectation of success, for modifying the flow direction in Batchelder's device 26

B. Batchelder in view of Shin does not disclose a "first passage" that "directs the cooling liquid into the lower chamber where the cooling liquid splits and is directed along a plurality of channels from a central region of the lower chamber outward," as recited in claim 15 29

Cooler Master Co., Ltd. Ex. 1009, Page 2 of 80
Cooler Master Co., Ltd. v. Asetek Danmark A/S
IPR2023-00667

C. Batchelder in view of Shin does not disclose a "second passage positioned at a perimeter of the lower chamber" that directs cooling liquid from the "lower chamber," as recited in claim 15 35

D. A person skilled in the art would not have been motivated to modify Batchelder to have a "radiator spaced apart from and fluidly coupled to the reservoir," as required by each of the independent claims 1, 8, and 15 37

VI. Ground 2 of the Petition Does Not Establish Obviousness of Claims 4, 14, or 19 Based on Batchelder, Shin, and Cheon 42

A. Batchelder, Shin, and Cheon do not disclose a control system "configured to adjust a rotational speed of a fan and a rotational speed of a pump" as required by claim 14 42

VII. Secondary Considerations Weigh Against Obviousness of the Challenged Claims 46

A. There is a Presumed Nexus Between Asetek's Patented Design and the Objective Indicia of Nonobviousness.....47

B. Objective Indicia Demonstrate the Nonobviousness of the Challenged Claims 61

1. Long-Felt Need and Failure of Others 61

2. Commercial success 66

3. Industry Praise.....68

VIII. Conclusion 71

Cooler Master Co., Ltd. Ex. 1009, Page 3 of 80
Cooler Master Co., Ltd. v. Asetek Danmark A/S
IPR2023-00667

TABLE OF AUTHORITIES

Page(s)

Federal Cases

Active Video Networks, Inc. v. Verizon Commc'ns, Inc.,
694 F.3d 1312 (Fed. Cir. 2012) 29, 37

Advanced Display Sys., Inc. v. Kent State Univ.,
212 F.3d 1272 (Fed. Cir. 2000) 62

Allen Archery, Inc. v. Browning Mfg. Co.,
819 F.2d 1087 (Fed. Cir. 1987) 68

Arctic Cat Inc. v. Polaris Indus., Inc.,
795 F. App'x 827 (Fed. Cir. 2019) 41

Arendi S.A.R.L. v. Apple Inc.,
832 F.3d 1355 (Fed. Cir. 2016) 35

Belden Inc. v. Berk-Tek LLC,
805 F.3d 1064 (Fed. Cir. 2015) 34

Brown & Williamson Tobacco Corp. v. Philip Morris Inc.,
229 F.3d 1120 (Fed. Cir. 2000) 48

Corning Glass Works v. Sumitoto Elec. U.S.A. Inc.,
671 F. Supp 1369 (S.D.N.Y. 1987), *aff'd* 868 F.2d 1251 (Fed. Cir. 1989) 68

Crocs, Inc. v. Int'l Trade Comm'n,
598 F.3d 1294 (Fed. Cir. 2010) 47

In re Cyclobenzaprine Hydrochloride Extended- Release Capsule Patent Litig.,
676 F.3d 1063 (Fed. Cir. 2012) 46

FOX Factory, Inc. v. SRAM, LLC,
944 F.3d 1366 (Fed. Cir. 2019) 48

In re Giannelli,
739 F.3d 1375 (Fed. Cir. 2014) 28, 37

In re Gordon,
733 F.2d 900 (Fed. Cir. 1984) 40

In re Gurley,
27 F.3d 551 (Fed. Cir. 1994) 41

Harari v. Lee,
656 F.3d 1331 (Fed. Cir. 2011) 45

Leo Pharm. Prods., Ltd. v. Rea,
726 F.3d 1346 (Fed. Cir. 2013) 47, 66

In re Mahurkar Double Lumen Hemodialysis Catheter Patent Litig.,
831 F. Supp. 1354 (N.D. Ill. 1993), *aff'd*, 71 F.3d 1573 (Fed. Cir. 1995) 62

Millennium Pharms., Inc. v. Sandoz Inc.,
862 F.3d 1356 (Fed. Cir. 2017) 28, 34

Minn. Mining & Mfg. Co. v. Johnson & Johnson Orthopaedics, Inc.,
976 F.2d 1559 (Fed. Cir. 1992) 62

Ortho-McNeil Pharm. Inc. v. Mylan Labs., Inc.,
520 F.3d 1358 (Fed. Cir. 2008) 46

Otsuka Pharm. Co. v. Sandoz, Inc.,
678 F.3d 1280 (Fed. Cir. 2012) 28

Personal Web Techs., Inc. v. Apple Inc.,
848 F.3d 987 (Fed. Cir. 2017) 29

Plas-Pak Indus., Inc. v. Sulzer Mixpac AG,
600 F. App'x 755 (Fed. Cir. 2015) 39, 40

Polaris Indus., Inc. v. Arctic Cat, Inc.,
882 F.3d 1056 (Fed. Cir. 2018) 48

Rambus Inc. v. Rea,
731 F.3d 1248 (Fed. Cir. 2013) 66

Cooler Master Co., Ltd. Ex. 1009, Page 5 of 80
Cooler Master Co., Ltd. v. Asetek Danmark A/S
IPR2023-00667

In re Ratti,
270 F.2d 810 (C.C.P.A. 1959) 28, 35, 39

Tec Air, Inc. v. Denso Mfg. Michigan Inc.,
192 F.3d 1353 (Fed. Cir. 1999) 62, 66

Vivid Techs., Inc. v. Am. Sci. & Eng'g, Inc.,
200 F.3d 795 (Fed. Cir. 1999) 6

Cooler Master Co., Ltd. Ex. 1009, Page 6 of 80
Cooler Master Co., Ltd. v. Asetek Danmark A/S
IPR2023-00667

I. Preliminary Statement

Petitioner's asserted Grounds 1 and 2 for unpatentability are based on alleged obviousness. Petitioner's allegations fail for several reasons, but principally because the prior art does not disclose a critical element of the claimed invention — the flow of cooling liquid from the center of the "lower chamber," where the cold plate is the hottest, to the periphery in the "lower chamber." Indeed, Petitioner's expert conceded during deposition that none of Petitioner's prior art references discloses this limitation, and that Petitioner's lead reference (Batchelder) instead discloses the opposite, cooling liquid flowing from the periphery to the center of the "lower chamber." Petitioner attempts to fill this critical gap in the prior art by arguing that it would have been a simple design choice to change the fluid flow direction in the lower chamber of Batchelder from periphery-to-center to center-to-periphery, but none of the prior art discloses that alleged design choice. Instead, Petitioner's only basis for its alleged change to Batchelder is impermissible hindsight and the route taken by the inventor. These arguments are legally impermissible and should be rejected for that reason alone. But Petitioner's arguments would also require significant reconstruction of Batchelder, which Petitioner has not articulated how to do, and for which a person of ordinary skill would not have had a reasonable expectation of success. Petitioner's arguments fail for these reasons as well.

As explained in further detail below, Petitioner has not sustained its burden

Cooler Master Co., Ltd. Ex. 1009, Page 7 of 80
Cooler Master Co., Ltd. v. Asetek Danmark A/S
IPR2023-00667

and the claims of the ’354 patent should be held patentable.

II. The ’354 patent

Computers (and particularly their central processing units, or “CPUs”) generate heat during operation, which must be dissipated efficiently and effectively for computers to operate reliably. Ex. 2018, ¶26. As technology advances and computers become faster and more powerful, they generate increasing amounts of heat that must be managed. *Id*. Various heat dissipation methods, including air cooling and liquid cooling, are used to manage heat in computer systems. *Id*. at ¶27. While air cooling systems are cheaper and easier to install, they are not as efficient as liquid cooling systems at heat removal. *Id.* Prior art liquid cooling systems were bulky and posed significant risk of leakage from having several components (such as a heat exchanger, a liquid reservoir, a pump, and a heat radiator) coupled together using tubes. *Id.* Such a configuration is illustrated in prior Art Figure 3 of the ’354 patent (depicted below), showing a prior art heat exchanger 7, a prior art liquid reservoir 8, a prior art pump 9, and a prior art heat radiator 11 connected in a closed loop using tubes.

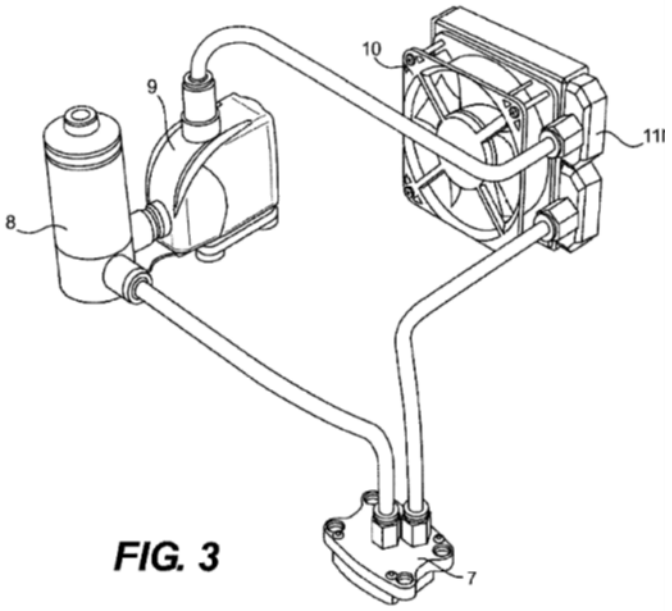

FIG. 3

Ex. 1001, Figure 3.

The liquid cooling technology described and claimed in the Asetek patents, including the ’354 patent, addressed this leakage problem, among others, and resulted in a highly efficient yet compact (narrow profile) liquid cooling device that has been widely accepted by the industry (and copied by competitors like CoolIT). *See* Ex. 2018, ¶¶28, 30. Among other things, Asetek’s patented technology is a significant advancement from the modular approach of prior art liquid cooling devices. *Id.* at ¶28. Figures 9 and 15 of the ’354 patent represents embodiments of the claimed invention. As evident from these figures and the patent claims, Asetek’s invention has, among other features, a pump unit that combines a pump, a dual-chambered “reservoir,” and a “heat exchanging interface” (i.e., a cold plate) into a single component. *Id.* The “reservoir” in Asetek’s patented design is divided into

two chambers, the referred to as the "upper chamber" and "lower chamber" in the '354 patent claims. *See, e.g.,* Ex. 1001, claims 1, 8, and 15; Ex. 2018, ¶28. The dual chambers are vertically spaced apart and fluidly coupled together to allow for heat dissipation from the CPU via the "heat exchanging interface," i.e., the boundary wall of the "lower chamber" which is placed in thermal contact with the CPU. Ex. 2018, ¶28. This configuration, among other features of the patented inventions, enables separate and independent optimization of the pumping function in the "upper chamber" and the heat transfer function in the "lower chamber." *Id.* The unique dual-chambered "reservoir" concept also made manufacturing of liquid cooling products simpler and less costly, and has also made installation of liquid cooling products by users easier as compared to installation of the kit-based modular liquid cooling components (shown in prior art Figure 3 of the '354 patent). Ex. 2018, ¶30.

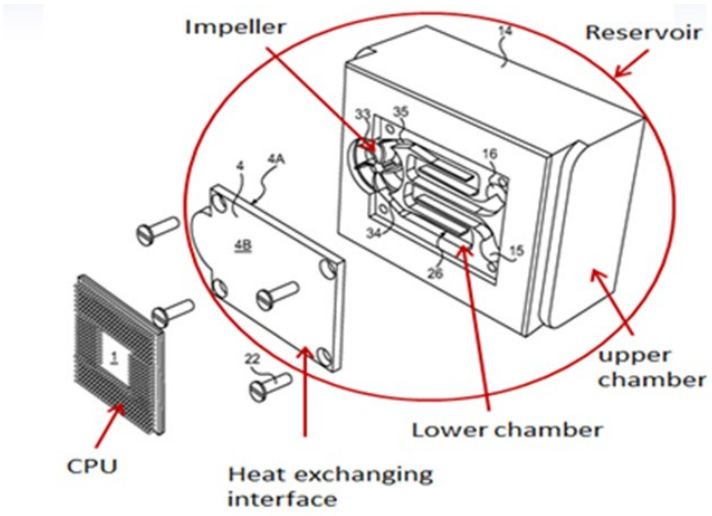

Figure 15

Ex. 1001, Figure 15 (annotations added); Ex. 2018, ¶28

The ’354 patent further describes and claims a very specific configuration for the dual-chambered “reservoir,” where cooling liquid enters the “lower chamber” from the “upper chamber” through a first passage that is substantially central to the “lower chamber,” as shown in Figure 9, depicted below. Ex. 2018, ¶¶28-29. Coolant entering the “lower chamber” splits and flows outwardly along a plurality of channels from the central region towards the perimeter of the “lower chamber,” where a second passage collects the heated coolant and directs it out of the “lower chamber.” Ex. 1001, 15:25-30, Fig. 9; Ex. 2018, ¶29. Positioning the first passage at the central region of the “lower chamber” allows the cooling liquid to make thermal contact with the center of the “heat exchanging interface” first, before collecting any heat from the perimeter of the “lower chamber.” Ex. 2018, ¶29. This arrangement is important for heat-removal efficiency because the center of the “heat exchanging interface” is positioned right above the heat-generating processing unit and is therefore hotter compared to the peripheries of the interface. *Id.* Allowing coolant to enter at the center of the “lower chamber” (as opposed to the perimeter) ensures more efficient heat removal from the hottest and the most critical region of the “heat exchanging interface.” *Id.* Moreover, pressure drop and flow resistance through the channels is reduced when coolant enters each channel at midway along its length, splits into two sub-flows, and flows outwardly along only half of the channel’s

length, as shown below in annotated Figure 9, instead of coolant traveling through the full length of each channel from one end of the "lower chamber" to the other. *Id.*

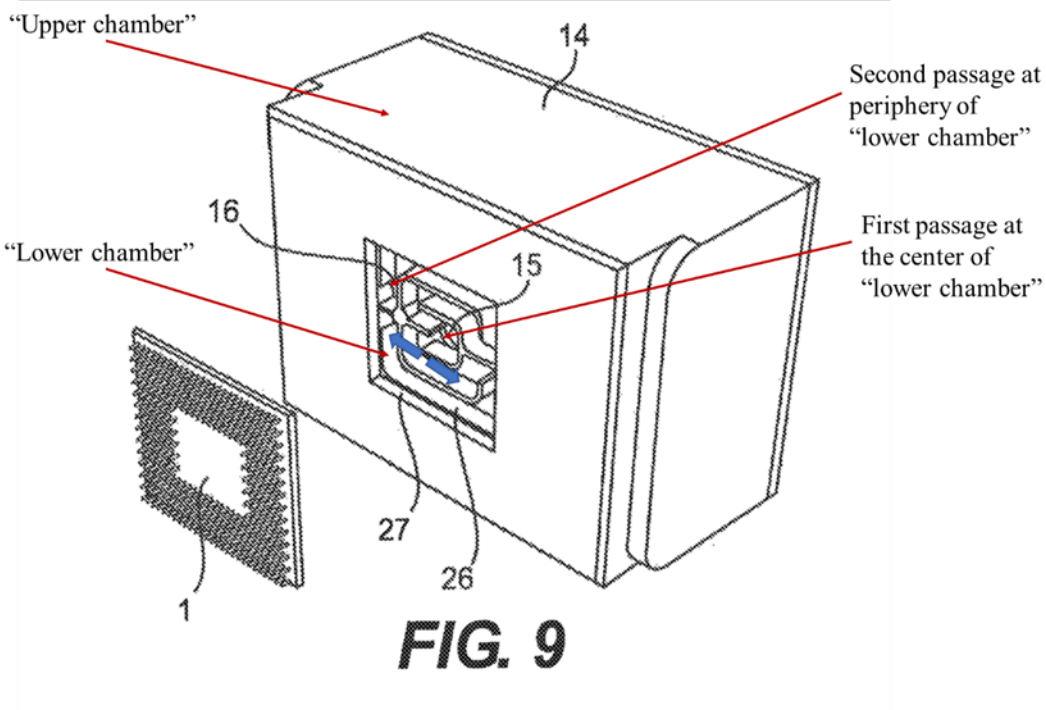

Ex. 1001, Figure 9 (annotation added); Ex. 2018, ¶29.

III. Claim Construction

In the Institution Decision, the Board found no claim terms needed express construction. DI at 10-11. Asetek agrees that no claim construction is required to resolve the dispute between the parties in this IPR proceeding. *Vivid Techs., Inc. v. Am. Sci. & Eng'g, Inc.*, 200 F.3d 795, 803 (Fed. Cir. 1999) ("[O]nly those terms need to be construed that are in controversy, and only to the extent necessary to

resolve the controversy."). Asetek has applied the plain and ordinary meaning for all relevant claim terms in this Response.

IV. Petition Prior Art

A. Batchelder

Batchelder discloses a heat exchange apparatus for transferring heat from a heat source to a heat absorber, which in turn transfers the heat to surrounding atmosphere. Ex. 1006, Title, Abstract, 2:41-45, 3:35-44; Ex. 2018, ¶31. The apparatus comprises an active heat spreader plate with internal flow channels for circulating a heat transfer fluid (also referred to herein as cooling liquid), and a means to circulate the fluid through the channels. Ex. 1006, Abstract; Ex. 2018, ¶31.

Petitioner's expert, Dr. Hodes, refers to two different embodiments of Batchelder in his analysis of the Challenged Claims. Pet. at 11-12, 17, 18. The first embodiment is shown in Figure 2, annotated below, and the second embodiment is shown in Figures 7 and 8. The basic components of Batchelder's heat exchange apparatus — heat spreader plate 20, heat absorbing device 28, and fan housing 30 — are annotated in Figure 2, below. Ex. 2018, ¶32. Heat enters heat spreader plate 20 through its lower surface 24 and is conducted into a metallic fin array 52, from where heat is transferred to a heat transfer fluid sealed in flow channels 50 inside heat spreader plate 20. Ex. 1006, 5:1-32; Ex. 2018, ¶32. The fluid is circulated inside plate 20 by an impeller 54. Ex. 1006, 5:1-32; Ex. 2018, ¶32. The fluid releases heat

Cooler Master Co., Ltd. Ex. 1009, Page 13 of 80
Cooler Master Co., Ltd. v. Asetek Danmark A/S
IPR2023-00667

near the top surface 26 of plate 20, where the heat is conducted into heat absorbing device 28. Ex. 1006, 5:1-32; Ex. 2018, ¶32. Air is blown through heat absorbing device 28 by fan blades 34 to transfer heat to the atmosphere. Ex. 1006, 5:1-32; Ex. 2018, ¶32. Fan blades 32 are attached to a motor and rotor 32 within fan housing 30. Ex. 1006, 5:1-32; Ex. 2018, ¶32. A permanent magnet 56 attached to the base of rotor 32 causes impeller 54 to rotate and thereby circulate the heat transfer fluid within active spreader plate 20. Ex. 1006, 5:1-32; Ex. 2018, ¶32.

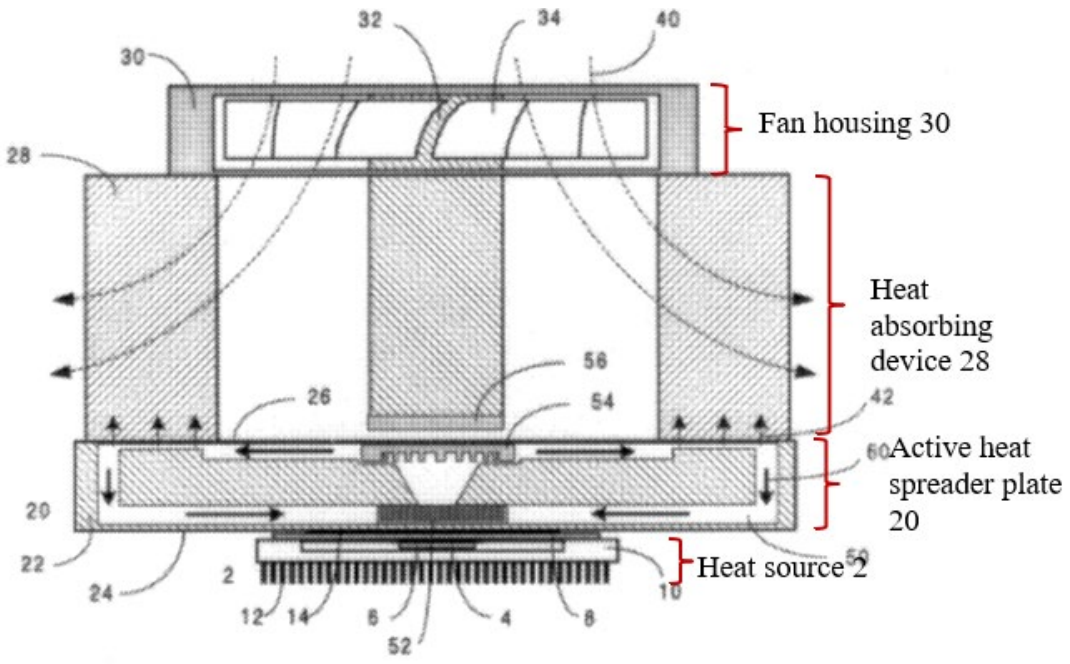

FIG.2

Ex. 1006, Fig. 2 (annotations added); Ex. 2018, ¶32.

The embodiment shown in Figures 7 and 8, i.e., heat sink assembly 240, also includes a heat spreader plate 20, which is "designed to be stamped from sheets and

subsequently assembled with adhesives, ultrasonic bonding, solvent bonding, or welding." Ex. 1006, 8:4-12; Ex. 2018, ¶33. Specifically, heat spreader plate 20 is formed by assembling multiple sheets and plates—a bottom sheet 202, a lower stamped plate 204, a medial sheet 206, an upper stamped plate 208, channel forming plate 210, and a top sheet 212. Ex. 1006, 7:23-8:1; Ex. 2018, ¶33. Dr. Hodes refers to the space between upper stamped plate 208 and channel forming plate 210 as the "upper chamber," and lower stamped plate 204 as the "lower chamber." Ex. 1003, ¶61; Ex. 2018, ¶33.

In addition to the heat spreader plate 20, heat sink 240 in Figures 7 and 8 includes a fan housing 30 and a heat absorbing device 28, just as in the embodiment shown in Figure 2. Ex. 1006, Fig. 7 (right hand-side image) (annotated below). The fins of heat absorbing device 28 are attached to the upper surface 26 of top sheet 212 of the heat spreader plate assembly. *Id*.; Ex. 2018, ¶34. A fan housing 30, rotor 32, and fan blades 34 are attached to the top of heat absorbing device 28, as in the embodiment shown in Figure 2. Ex. 1006, Fig. 7; Ex. 2018, ¶34. A heat source 2 is attached to the bottom sheet 202 of the heat spreader plate assembly through a compliant insulating layer 14. Ex. 1006, Fig. 7; Ex. 2018, ¶34. Heat from the heat source passes through the bottom surface 24 of the bottom sheet 202 and into a fin means 52 contained in a pocket 230 of the lower stamped plate 204 (i.e., alleged "lower chamber"). Ex. 1006, Fig. 7; Ex. 2018, ¶34.

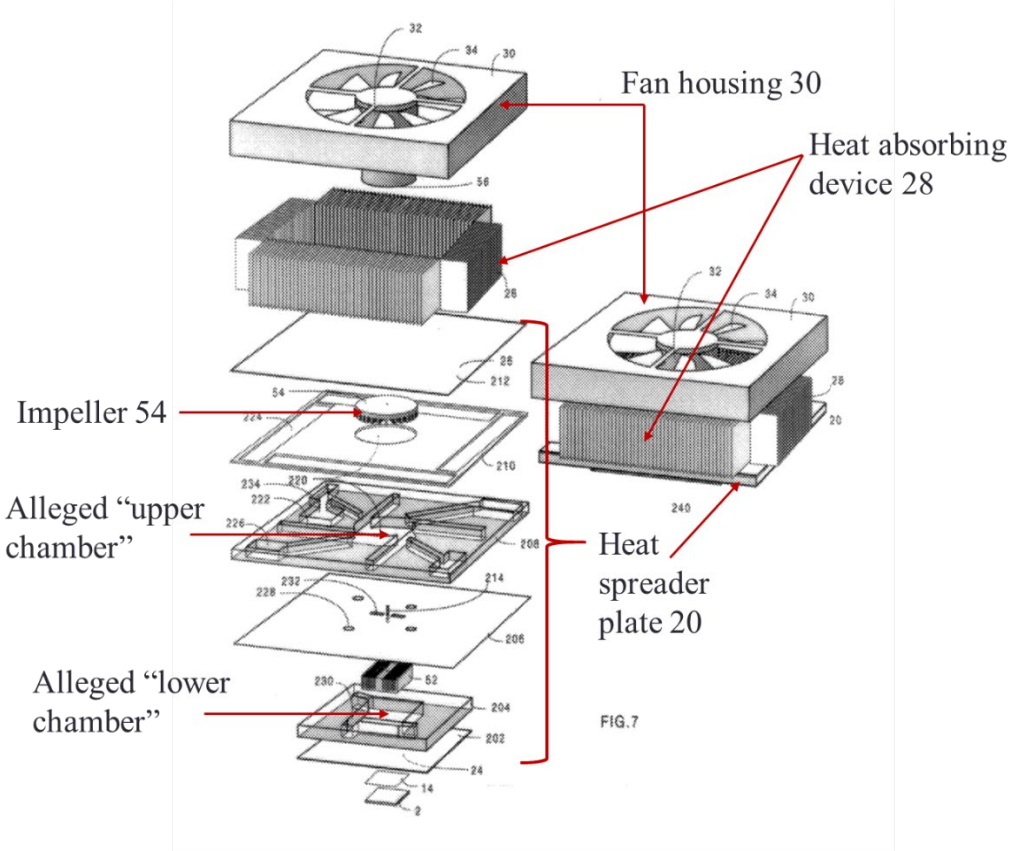

Ex. 1006, Fig. 7 (annotations added); Ex. 2018, ¶34.

Figure 8 of Batchelder, annotated below, shows the flow pattern through the heat spreader plate 20 described in Figure 7. Heat transfer fluid enters the corners of "lower chamber" through four holes 228 in medial sheet 206, passes in contact with the centrally-located fin means 52 to collect heat, and the heated fluid exits through slots 232 (also in medial sheet 206), and enters coaxial cavity 220 (i.e., the alleged "upper chamber"). Ex. 1006, 7:23-8:1, Fig. 8; Ex. 2018, ¶35. A rotatable impeller 54 is housed in the alleged "upper chamber," which impels the fluid rising through slots 232 to flow radially away from the impeller through channels 222 in upper stamped plate 204, then to flow in the plane of channel forming plate 210 and in

thermal communication with the fins of heat absorbing device 28 to release heat from the fluid. Ex. 1006, 7:23-8:1, Fig. 8; Ex. 2018, ¶35. The cooled fluid from channel forming plate 210 flows downward into channels 226 in upper stamped plate 204 and then flows radially towards impeller 54. Ex. 1006, 7:23-8:1, Fig. 8; Ex. 2018, ¶35. The cooled fluid in channels 226 then enters the "lower chamber" through holes 228, and the flow cycle repeats. Ex. 1006, 7:23-8:1, Fig. 8; Ex. 2018, ¶35.

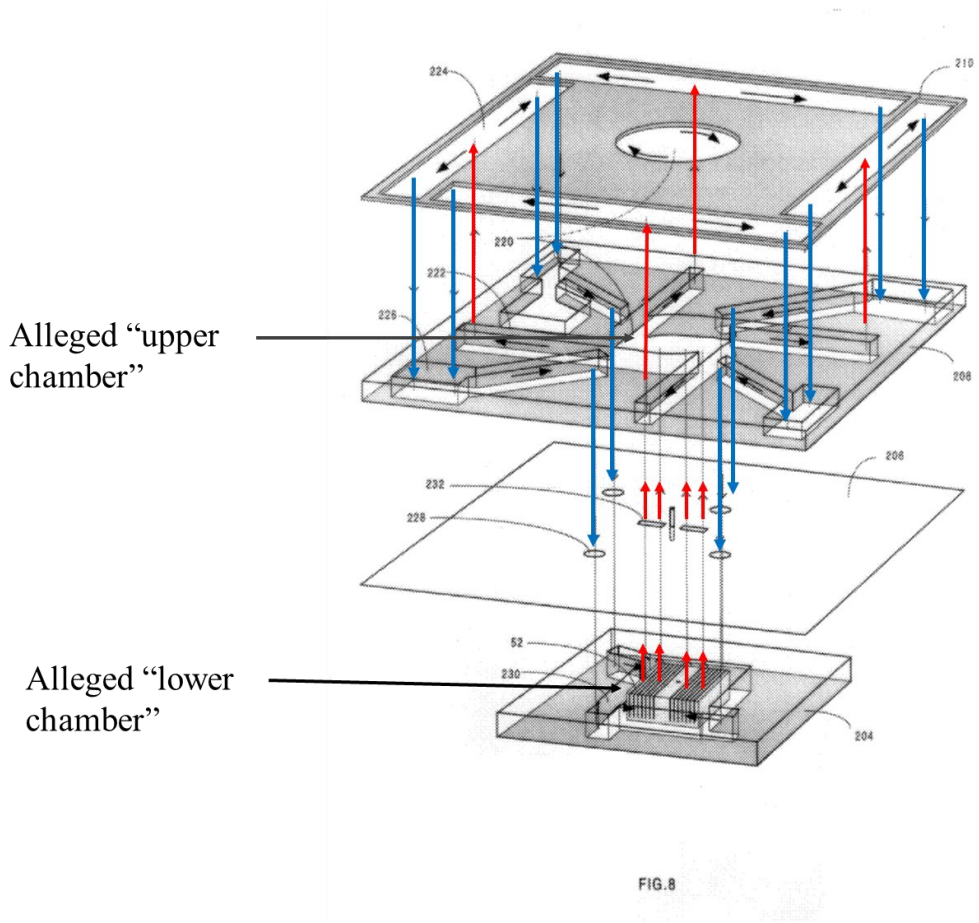

Ex. 1006, Fig. 8 (annotations added); Ex. 2018, ¶35.

B. Shin

Shin discloses a cooling device comprising a pump 5 and a heat sink 4, which are installed as an "integral structure" on an electronic heat generating element 1 to remove heat from that element. Ex. 1007, Abstract, Figs. 1 and 2 (reproduced below); Ex. 2018, ¶36. Pump 5 comprises an impeller case 11 (the alleged "upper chamber") and a motor 12. Ex. 1007, ¶[0018]; Ex. 2018, ¶36; Ex. 1003, ¶62. Heat sink 4 is the alleged "lower chamber" in Shin. Ex. 1003, ¶62; Ex. 2018, ¶36. A hose 6 connects the alleged "upper chamber" to one end of the alleged "lower chamber." Ex. 1007, ¶[0013], Figs. 1 and 3; Ex. 2018, ¶36. Moreover, Dr. Hodes contends that impeller case 11, heat sink 4, hose 6, and couplers 7 and 9 together form the claimed "reservoir." Ex. 1003, ¶58. In the embodiment shown in Figure 1, a vibration absorbing member 19 is positioned between pump 5 and heat sink 4 so that vibration of the pump does not affect the functioning of the electronic component. Ex. 1007, ¶[0013]; Ex. 2018, ¶36.

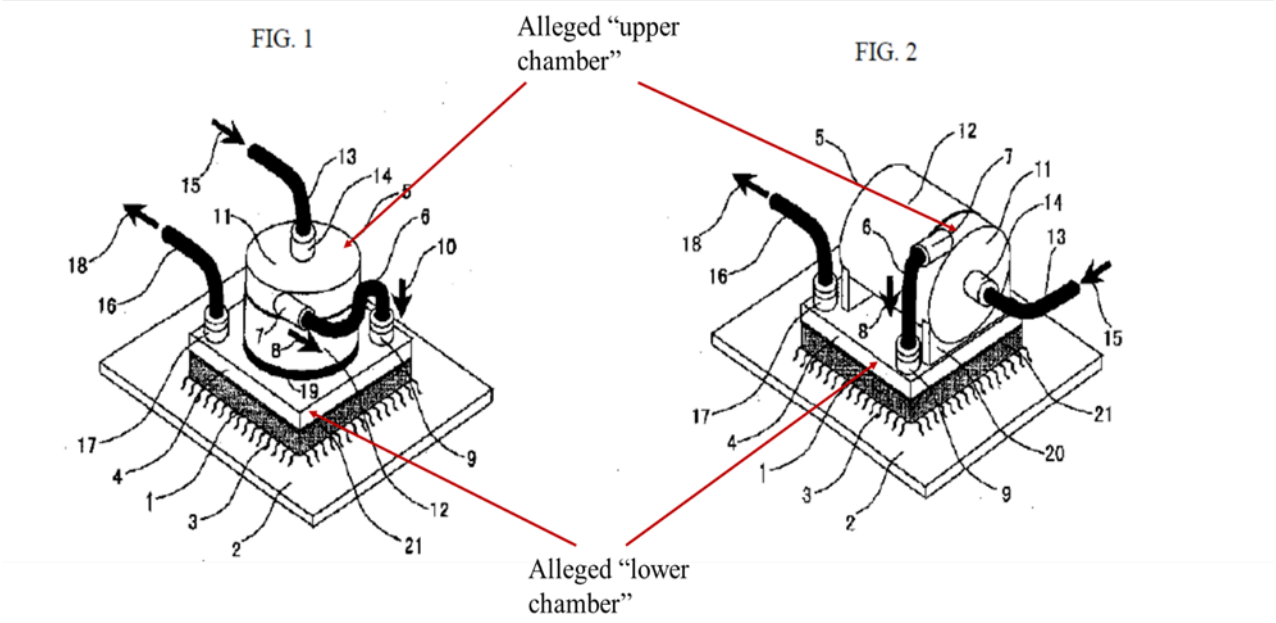

Ex. 1007, Figs. 1 and 2 (annotations added); Ex. 2018, ¶36.

Coolant entering heat sink 4, i.e., the alleged "lower chamber," is "split into a plurality of channels formed inside the heat sink and flows in snaking fashion, absorbing the heat of the heat generating element 1," and then exits heat sink 4 through hose 16 and flows into a heat exchange section 27 that cools the coolant. Ex. 1007, ¶¶[0013], [0025]; Ex. 2018, ¶37. Cooled coolant from heat exchange system 27 is returned to pump 5 by hose 13, is pressurized again by the pump, and then supplied to heat sink 4. Ex. 1007, ¶¶[0013], [0025]; Ex. 2018, ¶36.

Shin also teaches that the speed of pump motor 12 can be changed by changing the DC voltage supplied to the motor, thus enabling control of cooling power. Ex. 1007, ¶[0019]; Ex. 2018, ¶38. Moreover, "making the motor into a DC brushless

motor makes it possible to implement a pump of low noise and long service life." Ex. 1007, ¶[0019]; Ex. 2018, ¶38.

C. Cheon

Cheon discloses a cooling system for a computer that comprises one or more passive cold plates 12, 30, which are referred to as a "heat transfer devices." Ex. 1008, Abstract, Figs. 1 and 2 (Figure 1 reproduced below); Ex. 2018, ¶39. The "heat transfer devices" are placed in thermal contact with heat-generating computer components. Ex. 1008, Figs. 1 and 2; Ex. 2018, ¶39. Coolant is circulated through conduits from a reservoir 48 to the "heat transfer devices" where the coolant collects heat from the computer components, and the heated coolant then flows back to reservoir 48 where it is cooled by radiator 42. Ex. 2018, ¶39. Radiator 42 is mounted on the outside of the computer housing and is placed in thermal contact with reservoir 48 via a Peltier effect cooling module 46. Ex. 1008, Figs. 1 and 2, 4:49-55; Ex. 2018, ¶39. A pump (P) having a brushless electric motor is mounted in the reservoir casing 50 to circulate the coolant between the reservoir and the "heat transfer devices." Ex. 1008, Abstract, Figs. 1 and 2; Ex. 2018, ¶39.

Cooler Master Co., Ltd. Ex. 1009, Page 20 of 80
Cooler Master Co., Ltd. v. Asetek Danmark A/S
IPR2023-00667

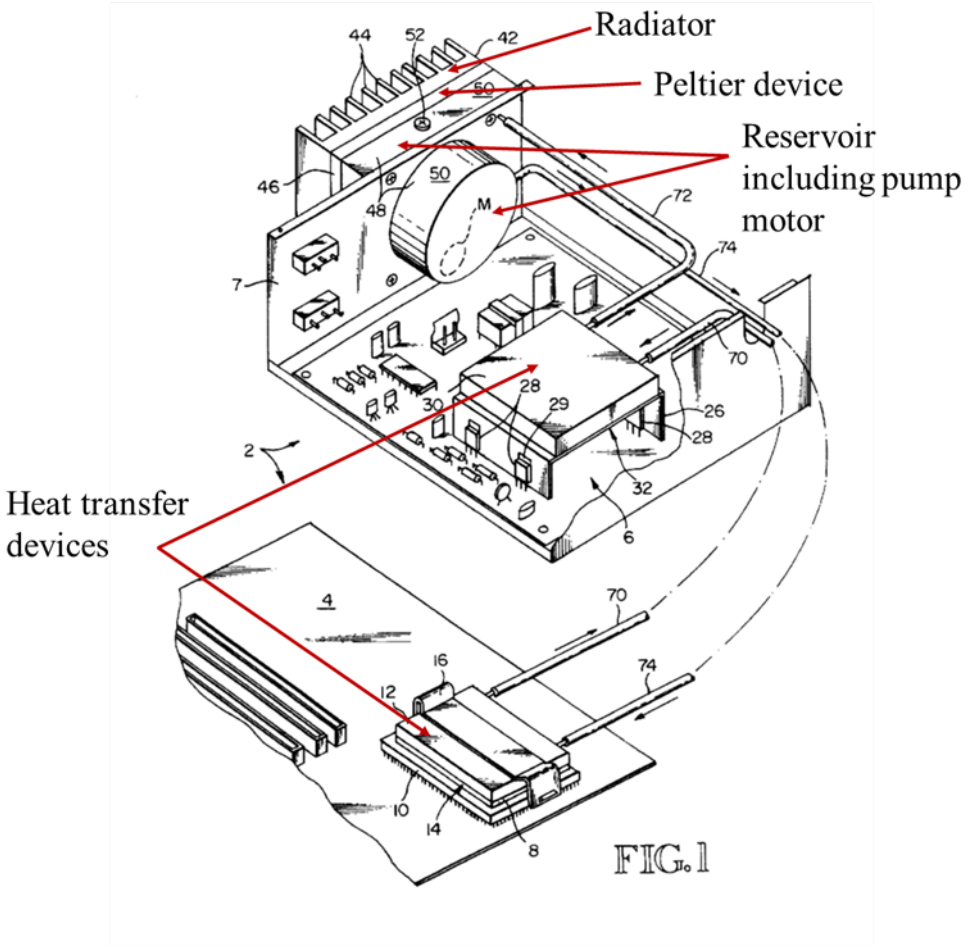

Ex. 1008, Fig. 1 (annotations added); Ex. 2018, ¶39.

Cheon discloses that its cooling system has a control circuit that controls circulation of coolant based on feedback from sensors indicating the temperatures of the electronic components to which the "heat transfer devices" are attached. Ex. 1008, 5:66–6:16; Ex. 2018, ¶40.

V. Ground 1 of the Petition Does Not Establish Obviousness of Claims 1, 8, or 15 Based on Batchelder and Shin

In Ground 1, the Petition alleges that claims 1, 8, and 15 are rendered obvious by the combination of Batchelder and Shin. But as discussed below, Batchelder and

Shin, alone or in combination, do not disclose "the lower chamber includes a plurality of channels configured to … direct the cooling liquid from the central region toward the perimeter of the lower chamber" as required by claim 1; a "first passage" that "directs the cooling liquid into the lower chamber where the cooling liquid splits and is directed along a plurality of channels from a central region of the lower chamber outward" as recited in claim 15; or a "second passage positioned at a perimeter of the lower chamber" that directs cooling liquid from the "lower chamber" as also required by claim 15. Moreover, a person skilled in the art would not have been motivated to modify Batchelder to have a "radiator spaced apart from and fluidly coupled to the reservoir," as required by claims 1, 8, and 15.

A. Batchelder in view of Shin does not disclose "the lower chamber includes a plurality of channels configured to … direct the cooling liquid from the central region toward the perimeter of the lower chamber" as required by claim 1

Claim 1 recites that the "first passage that fluidly couples the lower chamber to the upper chamber … is substantially central to the lower chamber" and the "lower chamber includes a plurality of channels configured to split the flow of cooling liquid and direct the cooling liquid from the central region toward the perimeter of the lower chamber." Ex. 1001, 19:3-11. The embodiment shown in Figure 9 of the '354 patent, annotated below, discloses this split-flow arrangement where cooling liquid enters the "lower chamber" through inlet 15 provided at a central region of the "lower chamber." Ex. 1001, Fig. 9, 15:25-30; Ex. 2018, ¶41. The plurality of

channels in the "lower chamber" split the cooling liquid and direct the flow of the liquid from the central region towards outlet 16 provided at the perimeter of the lower chamber. Ex. 1001, Fig. 9, 15:25-30; Ex. 2018, ¶41.

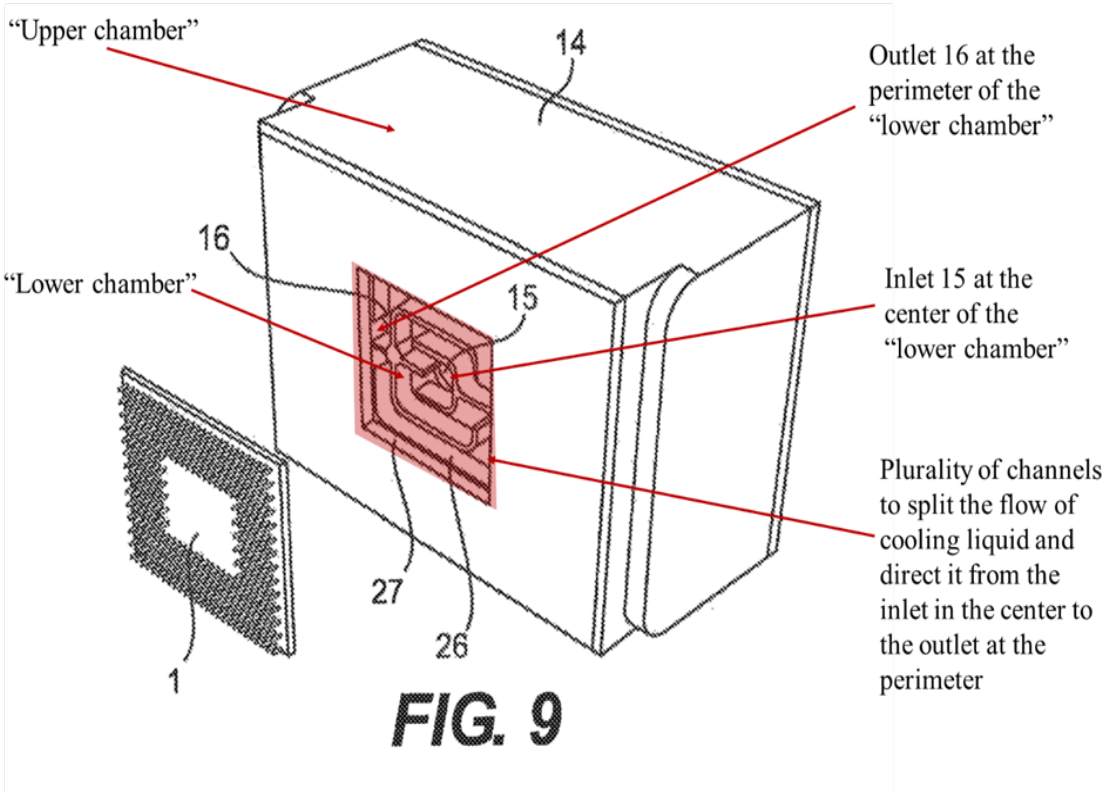

Ex. 1001, Figure 9 (annotations added); Ex. 2018, ¶41.

Neither Batchelder nor Shin discloses cooling liquid flow from a central region of the alleged "lower chamber" towards the perimeter. Ex. 2018, ¶42. Instead, both Batchelder and Shin disclose the opposite — i.e., cooling liquid flows from the perimeter towards a central region of the alleged "lower chamber." *Id.*

1. Batchelder does not disclose flow of cooling liquid from a central region of its alleged "lower chamber" towards the perimeter; rather, Batchelder discloses the opposite flow direction

In the embodiment shown in Figure 2 of Batchelder, annotated below, the arrows annotated in red ovals show that cooling liquid flows from the perimeter of the alleged "lower chamber" towards the centrally-located fin array 52 (rather than the reverse as recited in claim 1). Ex. 2018, ¶43. Even Petitioner's expert, Dr. Hodes, agreed during his deposition that in Batchelder's Figure 2, cooling liquid flows from the ***perimeter*** of the alleged "lower chamber" towards fin array 52 located in the ***center*** of the same chamber:

> Q. And in Figure 2 of Batchelder, that flow from the upper chamber back down toward the lower chamber is shown by the two arrows in spreader plate 20 that point downward, agreed?
>
> . . .
>
> THE WITNESS: Agreed.
>
> . . .
>
> Q. And after the fluid flows down in Figure 2, as shown by the two down-pointing arrows that we just discussed, it then enters the lower chamber in Figure 2, agreed?
>
> A. Agreed.

> Q. And then from there, ***the fluid flows from the perimeter of the lower chamber toward fin array 52 in the low -- in what you have designated as the lower chamber in Figure 2 of Batchelder***, right?
>
> A. Yes. Agreed.

Ex. 2016, 32:15-33:10 (emphasis added); *see also id.* at 38:11-14 (Dr. Hodes agreeing that fin array 52 is at the center of Batchelder's alleged "lower chamber.").

Fin array 52 creates a plurality of channels that direct the cooling liquid upwards into the alleged "upper chamber" through a passage positioned at a central region of the alleged "lower chamber." Ex. 1006, 5:28-32; Ex. 2018, ¶43. In the alleged "upper chamber," the cooling liquid flows radially outwards from impeller 54, releases heat near the top surface of that chamber, and the cooled liquid then returns to the perimeter of the alleged "lower chamber." Ex. 1006, 5:28-32; Ex. 2018, ¶43; Ex. 2016, 29:17-33:10.

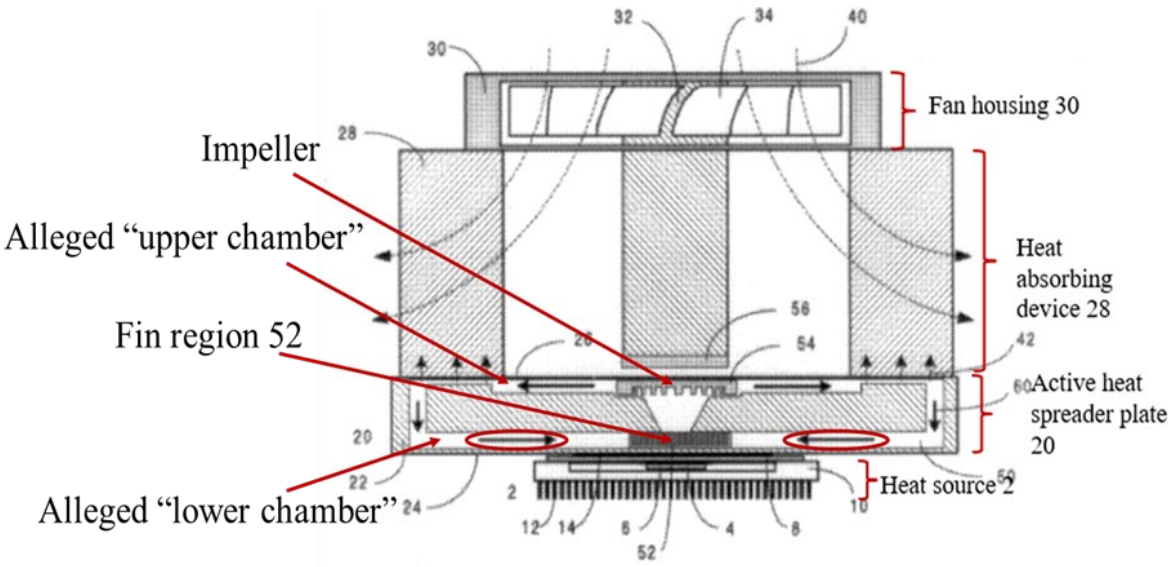

FIG.2

Ex. 1006, Figure 2 (annotations added); Ex. 2018, ¶43.

Similarly, in the embodiment shown in Figures 7 and 8 of Batchelder (Figure 8 annotated below), cooling liquid flows from the perimeter of the alleged "lower chamber" towards the center. Ex. 2018, ¶44. Petitioner's expert, Dr. Hodes, again agreed that cooling liquid enters the alleged "lower chamber" by flowing into the "corners" of the alleged "lower chamber" through four holes 228, and then flows towards fin array 52 in the center of the "lower chamber." Ex. 2016, 37:3-38:14. Specifically, cooling liquid enters pocket 230 of the lower stamped plate 204 (the alleged "lower chamber") at the four corners of the pocket through holes 228 in medial sheet 206. Ex. 1006, 7:23-8:1, Fig. 8; Ex. 2018, ¶44. Cooling liquid then flows toward and through fin array 52 in pocket 230 to collect heat, and the heated liquid exits through slots 232 (in medial sheet 206) that are provided near a central

region of pocket 230. Ex. 1006, 7:23-8:1, Fig. 8; Ex. 2018, ¶44. Thus, cooling liquid flows from the ***perimeter*** of the alleged "lower chamber" towards the ***center*** of same, and not the other way around. Ex. 2018, ¶ 44.

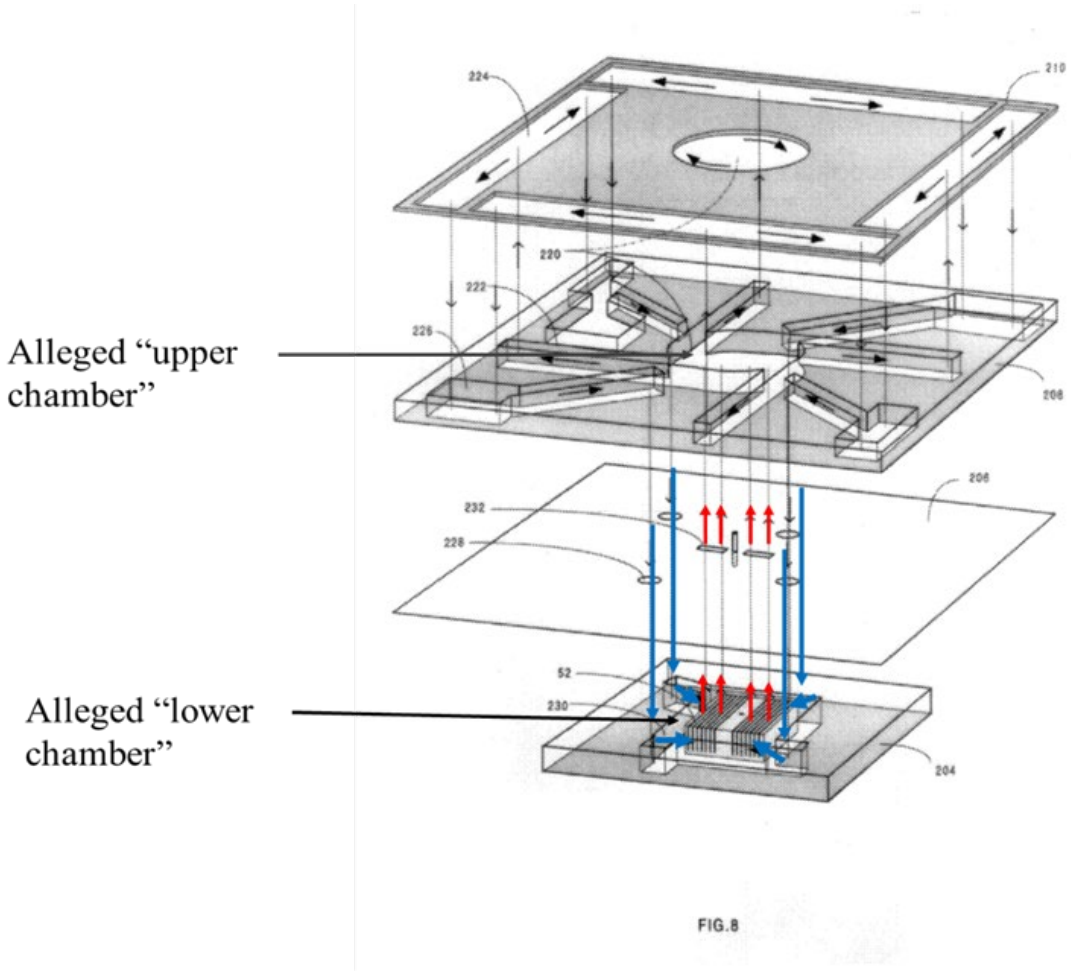

Ex. 1006, Figure 8 (annotations added); Ex. 2018, ¶44.

Dr. Hodes recognizes that Batchelder does not disclose flow of cooling liquid from a central region of the alleged "lower chamber" towards the perimeter, and instead discloses the opposite flow path — from the perimeter towards the center of the alleged "lower chamber." Ex. 2016, 32:15-33:10, 37:3-38:14. He nevertheless

suggests that this requirement of claim 1 is met because cooling liquid flows into the alleged "upper chamber" at the center, and ***eventually***, after releasing the heat, the cooled liquid leaves the alleged "upper chamber" and, after having journeyed through the entire system, the cooling liquid reenters the alleged "lower chamber" at the perimeter. Pet., 30; Ex. 1003, ¶78. Dr. Hodes is incorrect. A person skilled in the art would not understand the entire flow path through Batchelder's device meets the requirement that cooling liquid be directed "from the central region toward the perimeter of the lower chamber" as recited in claim 1 ("the lower chamber includes a plurality of channels configured to … direct the cooling liquid from the central region toward the perimeter of the lower chamber"). Ex. 2018, ¶46. To the contrary, the clear import of the claim language is that cooling liquid ***in*** the "lower chamber" must flow from the central region toward the perimeter of the chamber. Ex. 2018, ¶45. Batchelder does not disclose this. *Id.* at ¶¶42, 43, 44.

Batchelder's deficiency is compounded by the fact that the limitation "***plurality of channels configured to*** … direct the cooling liquid from the central region toward the perimeter of the lower chamber" of claim 1 requires the "plurality of channels" in the "lower chamber" to be configured to direct the flow of cooling from the central region of the "lower chamber" towards the perimeter of that same chamber, as illustrated in Figure 9 of the '354 patent. Ex. 2018, ¶45. Dr. Hodes agreed with that interpretation of claim 1 in his deposition. Ex. 2016, 99:20-100:5

("The focus of this limitation depends on how the channels are figured, and, again, ***the channels are configured to split the flow into multiple streams and direct it from the central region toward the perimeter***, but in my opinion, it leaves open something to be between the channels and the perimeter.") (emphasis added); *see also id.* at 94:14-99:15 (agreeing again that claim 1 requires the "channels [to be] configured to direct the cooling liquid from the central region towards the perimeter of the lower chamber."). But despite agreeing with this interpretation, Dr. Hodes failed to show how the plurality of channels in fin array 52 of Batchelder's alleged "lower chamber" direct the flow of cooling liquid from the central region towards the perimeter of that chamber, as required by claim 1. Ex. 2018, ¶46. To the contrary, fin array 52 is configured to direct the flow from the perimeter towards the center of the alleged "lower chamber" of Batchelder. *Id.*; *see also* Ex. 1006, Figs. 2 and 8. In fact, Dr. Hodes admitted during this deposition that cooling liquid is "definitely coming in [the lower chamber] at the periphery and leaving at the center as it flows through the various embodiments of the fin arrays" and further that "[o]ne of the functions of the fin array is to direct the fluid towards the center." *See* Ex. 2016, 159:4-161:11. He, however, continued to implausibly assert that the flow through the entire device, including the fin array, meets claim 1's requirement that cooling liquid be directed "from the central region toward the perimeter of the lower chamber." *See id.*

Dr. Hodes's argument that the flow through the entire Batchelder device meets the "lower chamber includes a plurality of channels configured to . . . direct the cooling liquid from the central region toward the perimeter of the lower chamber" limitation makes even less sense when considered in the context of the claim limitation "a radiator spaced apart from and fluidly coupled to the reservoir." Ex. 2018, ¶47. For the latter limitation, Dr. Hodes argues that cooling liquid from Batchelder's alleged "upper chamber" could be routed to an external radiator and the cooled liquid from the radiator could be supplied to the alleged "lower chamber." Pet., 43; Ex. 1003, ¶99. But when Dr. Hodes's arguments for these two limitations of claim 1 are juxtaposed, the critical error in Dr. Hodes's positions become even more clear. Ex. 2018, ¶47. Under Dr. Hodes's theory, Batchelder would allegedly meet the limitation "direct[ing] the cooling liquid from the central region toward the perimeter of the lower chamber" even when cooling liquid exits Batchelder's alleged "lower chamber" through a first, central passage; flows through the alleged "upper chamber"; flows through external tubing to an external radiator; and then reenters the cooling device at the perimeter of the alleged "lower chamber." Ex. 2018, ¶47. But claim 1 cannot be interpreted that broadly to cover the flow path through the entire system, including an external radiator. *Id.* Instead, this limitation of claim 1 merely recites the direction of liquid flow in the "lower chamber" through a "plurality of channels" that are configured to direct the flow from the center towards

the perimeter of the "lower chamber." *Id.* Batchelder does not disclose the recited flow direction of claim 1. Instead, Batchelder discloses cooling liquid flow from the perimeter towards the central region of its alleged "lower chamber," i.e., the opposite of the flow direction that is claimed. *Id.* at ¶48.

2. Nor does Shin disclose flow of cooling liquid from a central region of its alleged "lower chamber" towards the perimeter

Shin does not overcome Batchelder's deficiency because Shin discloses flow of cooling liquid flow from one end of heat sink 4 (the alleged "lower chamber") towards the other end. Ex. 1007, Figs. 1 and 2; Ex. 2018, ¶49. Specifically, Figure 1, annotated below, shows cooling liquid entering heat sink 4 at its perimeter through hose 6 and exiting the heat sink at the other end through hose 16. Ex. 2018, ¶49.

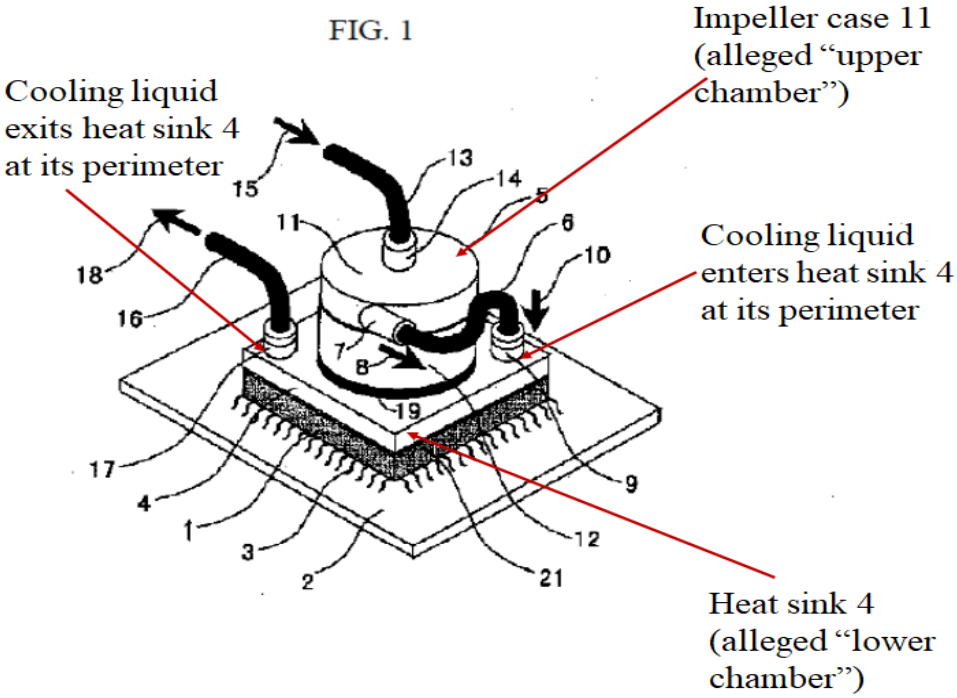

Ex. 1007, Fig. 1 (annotations added); Ex. 2018, ¶49.

Petitioner's argument that the cooling liquid in Shin's heat sink 4 "pass[es] through the center of the chamber and exits at point 18 such that the cooling liquid flows from the center to the periphery" (Pet., 31) misses the mark because Shin does not disclose the flow path through heat sink 4. Ex. 2018, ¶50. There is no disclosure or suggestion in Shin that cooling liquid passes through the center of heat sink 4 when flowing from one end to another. *Id.* In fact, Dr. Hodes admitted that the flow path within Shin's heat sink 4 is undisclosed. Ex. 2017, 50:5-51:9 ("I'm not sure exactly what the flow path within the [heat sink] 4 could be, because, you know, you could have longitudinal or transverse fins in there or you could have plane fins in there."). But more importantly, claim 1 recites that cooling liquid flows ***from*** a central region ***toward*** the perimeter, ***not through a central region***, so Shin cannot meet this limitation even assuming cooling liquid passes through the center of Shin's alleged "lower chamber" (heat sink 4). Ex. 2018, ¶50.

In short, Shin does not disclose or suggest the limitation "a plurality of channels configured to … direct the cooling liquid from the central region toward the perimeter of the lower chamber" of claim 1.

3. There is no motivation, or reasonable expectation of success, for modifying the flow direction in Batchelder's device

Contrary to Dr. Hodes's suggestion, a person skilled in the art would not have been motivated to modify the flow path in Batchelder's device so that cooling liquid

in the alleged "lower chamber" flows from a central region of the chamber towards the perimeter of that chamber. Ex. 2018, ¶52. This is because the direction of liquid flow in the "lower chamber" is critical for optimal heat removal; it is not simply a matter of "choice" as argued by Dr. Hodes. *Id.* at ¶¶52, 54; Ex. 1003, ¶80 (Dr. Hodes arguing "changing the flow direction would be a choice with predictable results").

As explained by Patent Owner's expert, Dr. Tilton, the central region of the "lower chamber" is hotter than the peripheries because the heat-generating chip sits directly below the center of the "lower chamber"/ "heat exchanging interface." Ex. 2018, ¶52. Therefore, heat removal efficiency is improved if cooled liquid enters the "lower chamber" at the center, collects heat from the central region which is the hottest and the most critical part of the "lower chamber," and then flows to the perimeter of the chamber. *Id.* Neither Batchelder nor Shin discloses this center-to-periphery flow direction that is disclosed and claimed in the '354 patent. *Id.* Moreover, neither Batchelder nor Shin recognizes that the direction of flow in the alleged "lower chamber" — center-to-periphery versus periphery-to-center — impacts heat removal. *Id.* at ¶53. Thus, Dr. Hodes's argument that the flow direction is a "choice," or that it can be reversed with "predictable results," is tainted by hindsight reasoning aimed at arriving at the claimed invention. *See id.* Without Patent Owner's claims as a roadmap, a person skilled in the art would have had no reason to modify Batchelder's flow direction. But, "[t]he inventor's own path itself

never leads to a conclusion of obviousness; that is hindsight." *Millennium Pharms., Inc. v. Sandoz Inc.*, 862 F.3d 1356, 1367 (Fed. Cir. 2017) (quoting *Otsuka Pharm. Co. v. Sandoz, Inc.*, 678 F.3d 1280, 1296 (Fed. Cir. 2012)). "What matters is the path that the person of ordinary skill in the art would have followed, as evidenced by the pertinent prior art," *id.*, and here that path is not present in either Batchelder or Shin.

Moreover, reversing the direction of flow in Batchelder, i.e., from perimeter-to-center to center-to-perimeter of the "lower chamber," would require significant reconstruction of Batchelder that neither Petitioner nor Dr. Hodes has not articulated how to do. Ex. 2018, ¶54. Batchelder explains that its pumping mechanism is configured to impel the cooling liquid "radially outwards" from impeller 54. *See* Ex. 1006, 5:26-32. To change the flow direction, such that cooling liquid flows towards the center of impeller 54 and then reaches the central region of the alleged "lower chamber" through the opening below impeller 54, the entire pumping configuration of Batchelder would have to changed. Ex. 2018, ¶54. A person skilled in the art would not reasonably have expected success in such wholesale reconstruction of Batchelder. *Id.*; *In re Ratti,* 270 F.2d 810, 813 (C.C.P.A. 1959) (a combination that requires "a substantial reconstruction and redesign of the elements" in a reference does not support obviousness); *In re Giannelli*, 739 F.3d 1375, 1380-81 (Fed. Cir. 2014) (reversing affirmance of examiner's obviousness determination where the Board's analysis "contained no explanation why or how [a skilled artisan] would

modify" the prior art to arrive at the claimed invention); *see also Personal Web Techs., Inc. v. Apple Inc*., 848 F.3d 987, 994 (Fed. Cir. 2017). Nor is such substantial reconstruction a matter of "choice" as argued by Dr. Hodes. Ex. 2018, ¶54.

At bottom, Petitioner's entire obviousness analysis in Ground 1 is nothing more than impermissible hindsight. Petitioner's conclusory and hindsight-driven design "choice" rationale for modifying Batchelder's flow direction cannot withstand scrutiny. *See Active Video Networks, Inc. v. Verizon Commc'ns, Inc.,* 694 F.3d 1312, 1327-28 (Fed. Cir. 2012)) (rejecting conclusory expert testimony because it "fail[ed] to explain why a person of ordinary skill in the art would have combined elements from specific references *in the way the claimed invention does.*") (citations omitted; emphasis in original).

B. Batchelder in view of Shin does not disclose a "first passage" that "directs the cooling liquid into the lower chamber where the cooling liquid splits and is directed along a plurality of channels from a central region of the lower chamber outward," as recited in claim 15

Claim 15 recites a "first passage" that "directs the cooling liquid into the lower chamber" and further that the cooling liquid entering the "lower chamber" is "directed along a plurality of channels from a central region of the lower chamber outward." Batchelder does not discloses these limitations of claim 15. Ex. 2018, ¶61. Specifically, as shown in the embodiment in Figure 2, annotated below, the alleged "first passage" of Batchelder, i.e., the opening between fin array 52 and impeller 54,

directs the cooling liquid ***from*** the alleged "lower chamber" ***into*** the alleged "upper chamber," and not the other way around as incorrectly asserted by Petitioner and Dr. Hodes. *Id.* (quoting Ex. 1003, ¶117; Pet., 51).

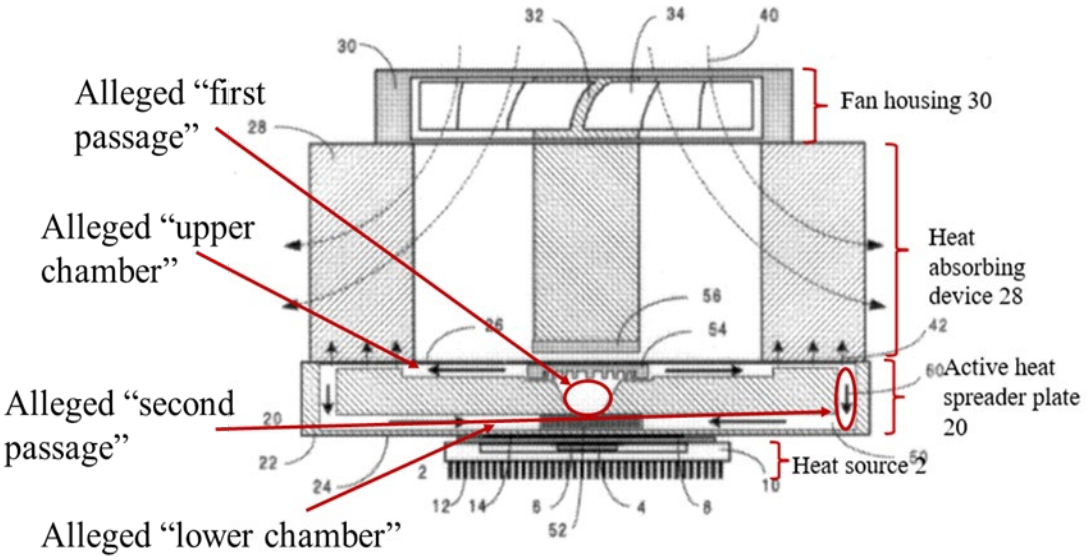

FIG.2

Ex. 1006, Fig. 2 (annotations added); Ex. 2018, ¶61.

Moreover, claim 15 requires cooling liquid in the lower chamber to be "directed along a plurality of channels from a central region of the lower chamber outward." That is, cooling liquid in the "lower chamber" must flow from the central region toward the periphery through the "plurality of channels" in that chamber. Ex. 2018, ¶62. But Batchelder does not disclose that. *Id.* As shown in the embodiment in Figure 2 of Batchelder, annotated below, cooling liquid flows from the periphery and towards the centrally-located fin array 52 of the alleged "lower chamber" (as illustrated by the arrows annotated in red ovals). Ex. 2018, ¶¶43, 62. Likewise, in

the embodiment shown in Figures 7 and 8 of Batchelder (Figure 8 annotated below), cooling liquid flows from the periphery of the alleged "lower chamber" towards the center. Ex. 2018, ¶¶44, 62. In short, Batchelder discloses flow of cooling liquid from the periphery towards the central region of its alleged "lower chamber," not the other way around as required by claim 15.

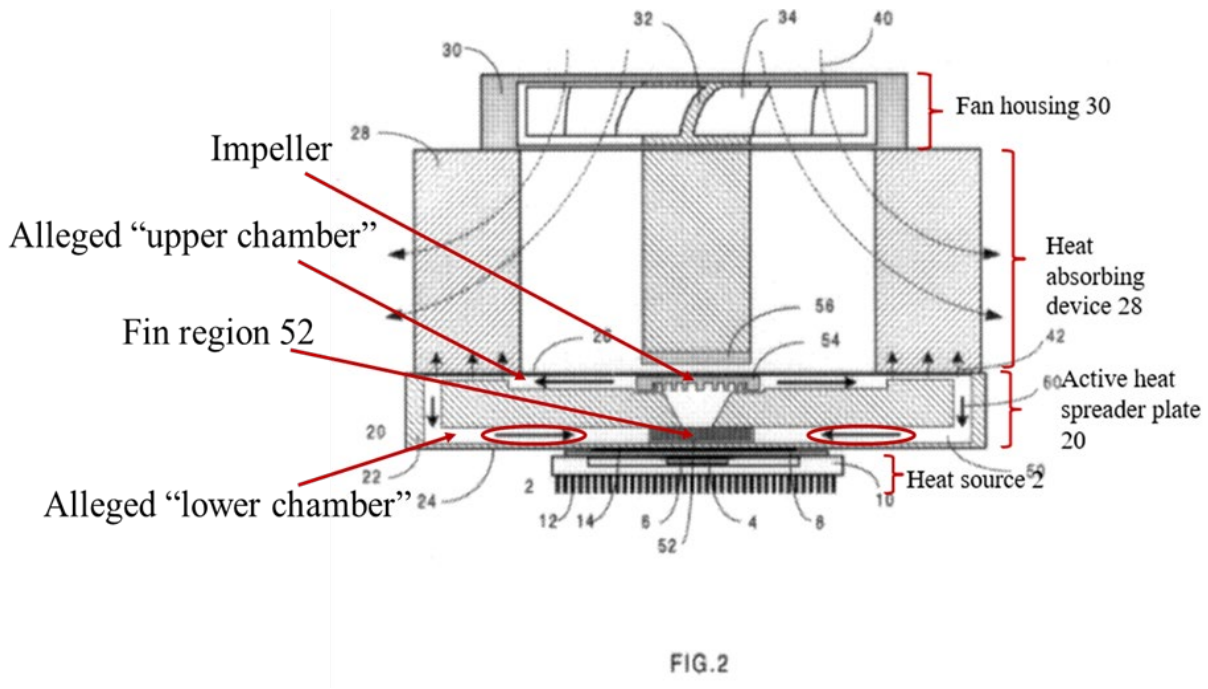

Ex. 1006, Fig. 2 (annotations added); Ex. 2018, ¶43.

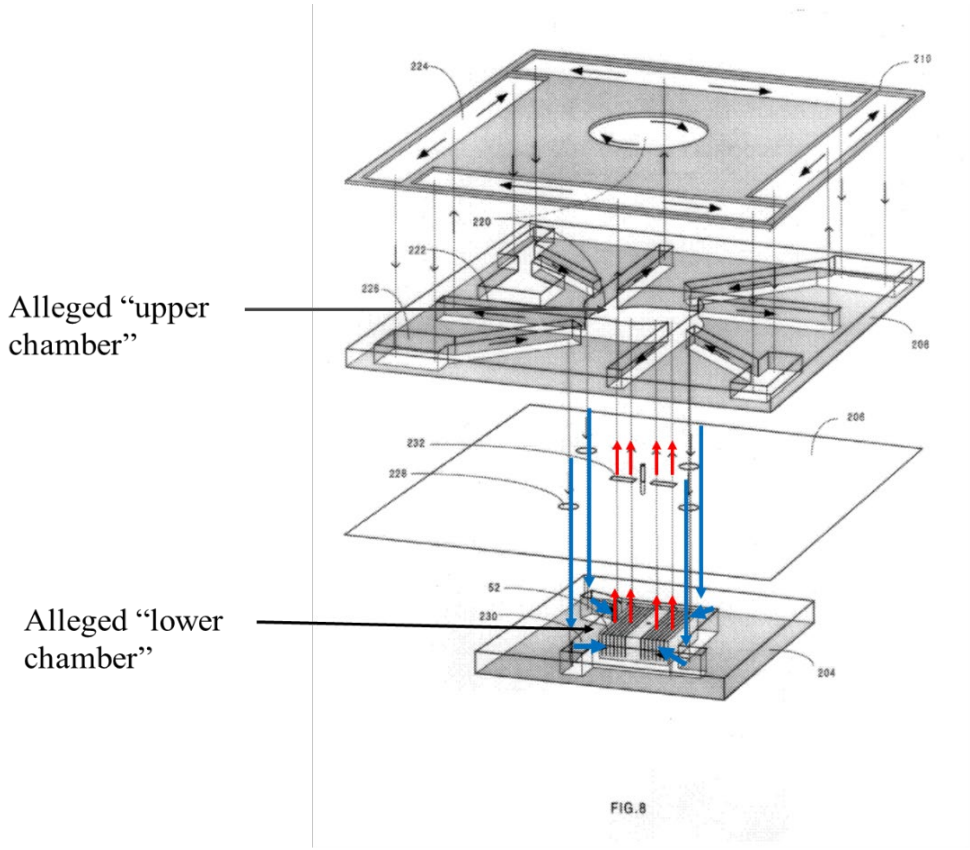

Ex. 1006, Fig. 8 (annotations added); Ex. 2018, ¶44.

Shin does not overcome this deficiency of Batchelder because Shin discloses flow of cooling liquid from one end of heat sink 4 (the alleged "lower chamber") towards the other end. Ex. 1007, Figs. 1 and 2; Ex. 2018, ¶63. Specifically, Figure 1, annotated below, shows cooling liquid entering heat sink 4 at its perimeter through hose 6 and exiting the heat sink at the other end through hose 16. Ex. 1007, Fig. 1; Ex. 2018, ¶63. There is no disclosure or suggestion in Shin that cooling liquid flows outwards from the central region, or that cooling liquid even passes through the center of heat sink 4 when flowing from one end to another. Ex. 2018, ¶¶49, 63. Therefore, contrary to Dr. Hodes's assertion (Ex. 1003, ¶118), Shin also does not

disclose the center-to-periphery flow direction in the "lower chamber" as recited in claim 15.

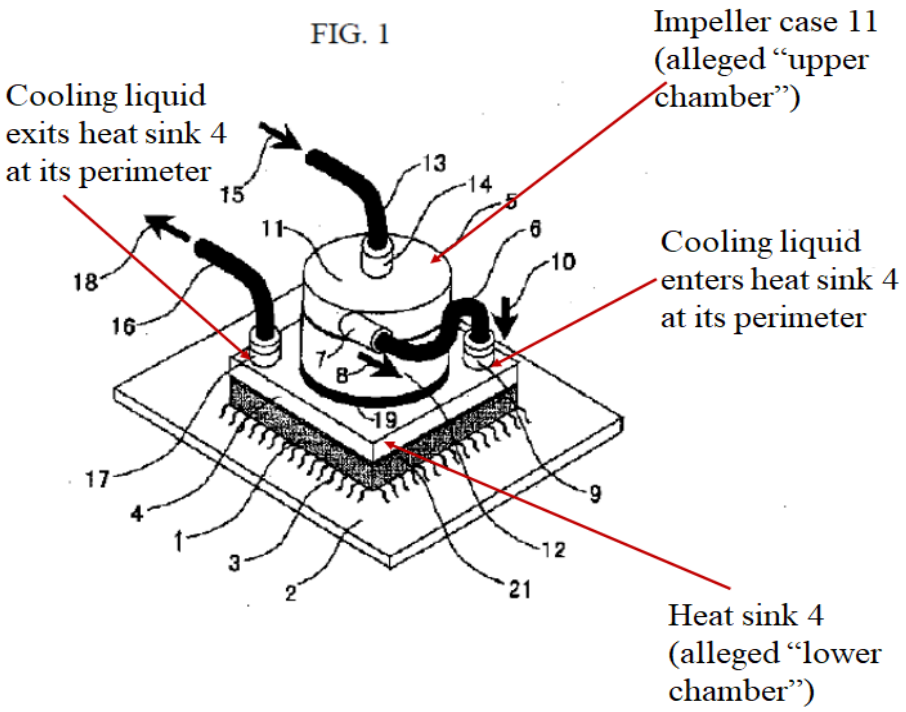

Ex. 1007, Fig. 1 (annotations added); Ex. 2018, ¶49.

Moreover, Petitioner has not pointed to anything outside the '354 patent that would have motivated a person skilled in the art to modify the flow path in Batchelder's device so that cooling liquid in the alleged "lower chamber" flows outward from a central region of the chamber. Ex. 2018, ¶64. Rather, Petitioner's expert, Dr. Hodes, argues that the flow direction is a "choice" and that "virtually any path may be taken across a heat exchanging interface so as to maximize heat transfer efficiency." Ex. 1003, ¶¶80, 118. Dr. Hodes is incorrect. Ex. 2018, ¶64. The center-to-periphery flow direction in the "lower chamber," which is disclosed and claimed

in the ’354 patent, is critical for optimal heat removal and is not simply a matter of “choice” as argued by Dr. Hodes. *Id.* This is because the central region of the “lower chamber” is hotter than the peripheries, so heat removal efficiency is improved if cooled liquid enters the “lower chamber” at the center, collects heat from the central region (the hottest and the most critical part of the “lower chamber”), and then flows outwards to collect heat from the peripheries of the “lower chamber” before exiting. *Id.* Petitioner has not shown that this critical center-to-periphery flow direction was known or practiced before the claimed invention of the ’354 patent. *See id.*

Absent hindsight and without using the ’354 patent as a blueprint, a person skilled in the art would have had no reason or motivation to reverse the direction of flow in the “lower chamber” from perimeter-to-center (as disclosed in Batchelder) to center-to-perimeter (as recited in claim 15). Ex. 2018, ¶65; *Millennium Pharms.,* 862 F.3d at 1367 (the claimed invention cannot supply the motivation for modifying a prior art reference); *Belden Inc. v. Berk-Tek LLC*, 805 F.3d 1064, 1073 (Fed. Cir. 2015) (The obviousness inquiry is “whether a skilled artisan not only *could have made* but *would have been motivated to make* the combinations or modifications of prior art to arrive at the claimed invention.”) (emphases in original).

Moreover, reversing the flow direction would require significant reconstruction of Batchelder that Dr. Hodes has not articulated how to do. Ex. 2018, ¶65. To change the flow direction in Batchelder, such that cooling liquid enters at

the center of the alleged "lower chamber" through the opening below impeller 54 and flows outward, the entire pumping configuration of Batchelder would have to changed. *Id.* A person skilled in the art would not reasonably have expected success in such substantial reconstruction of Batchelder, nor would such reconstruction be obvious. *Id.*; *Ratti*, 270 F.2d at 813.

In sum, Dr. Hodes has not articulated any motivation or a reasonable expectation of success, aside from a conclusory design "choice" suggestion, for changing the flow direction in Batchelder. Ex. 2018, ¶65. But such a critical limitation cannot be supplied by conclusory expert testimony, without any prior art support, as Petitioner attempts to do here. *Arendi S.A.R.L. v. Apple Inc.*, 832 F.3d 1355, 1363 (Fed. Cir. 2016).

C. Batchelder in view of Shin does not disclose a "second passage positioned at a perimeter of the lower chamber" that directs cooling liquid from the "lower chamber," as recited in claim 15

Claim 15 requires a "second passage positioned at a perimeter of the lower chamber" through which cooling liquid exits the "lower chamber." Batchelder does not disclose this limitation. Ex. 2018, ¶66. Petitioner and Dr. Hodes incorrectly assert that Batchelder discloses directing cooling liquid "from the lower chamber through the second passage (60)." *Id.* (citing Ex. 1003, ¶117; Pet., 51). Batchelder actually discloses the opposite — i.e., cooling liquid flows ***from*** the alleged "lower chamber" ***to*** the alleged "upper chamber" not through the alleged "second passage"

(60), but through a "first passage" positioned at a central region of the "lower chamber," as shown in Figure 2, annotated below. Ex. 2018, ¶66. In the embodiment shown in Figures 7 and 8 too, cooling liquid similarly flows ***from*** pocket 230 (the alleged "lower chamber") ***to*** coaxial cavity 220 (i.e., the alleged "upper chamber") through slot 232. *Id.*; *see* Ex. 1006, Fig. 8 (annotated and discussed above).

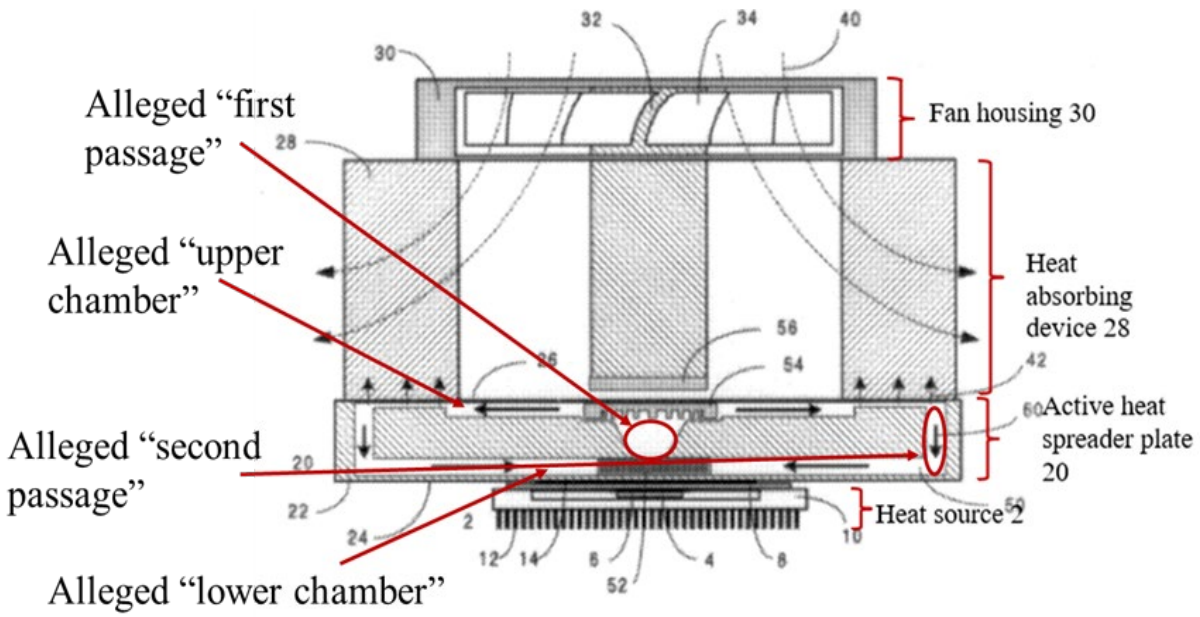

FIG.2

Ex. 1006, Fig. 2 (annotations added); Ex. 2018, ¶66.

In other words, although Batchelder shows passage 60 at the periphery of its alleged "lower chamber," cooling liquid is not directed ***from*** the "lower chamber" through that passage. Ex. 2018, ¶67. Instead, cooling liquid is directed ***to*** the alleged "lower chamber" through that passage 60 at the periphery of that chamber. *Id.*

Shin does not overcome this deficiency of Batchelder. Although Shin discloses a passage positioned at a perimeter of heat sink 4 (Shin's alleged "lower chamber") through which cooling liquid exits, Petitioner and Dr. Hodes do not explain ***why*** or ***how*** Batchelder would have been modified in view of Shin to reverse the flow path/direction in Batchelder such that cooling liquid exits Batchelder's alleged "lower chamber" through a passage at the perimeter (instead of exiting through the passage at the center of the alleged "lower chamber"). *Id.* at ¶68. Petitioner's modification arguments for claim 15 are therefore deficient as a matter of law. *In re Giannelli*, 739 F.3d at 1380; *Active Video*, 694 F.3d at 1327-28.

D. A person skilled in the art would not have been motivated to modify Batchelder to have a "radiator spaced apart from and fluidly coupled to the reservoir," as required by each of the independent claims 1, 8, and 15

Batchelder discloses a heat absorbing device 28 that is positioned vertically above and in contact with active spreader plate 20, which forms the alleged "reservoir" of the Batchelder device. Ex. 1006, Figs. 2, 7, and 8 (showing that heat absorbing device 28 is positioned vertically above active spreader plate 20); Ex. 2018, ¶69. That is, heat absorbing device 28 is not "spaced apart" from the "reservoir." Ex. 2018, ¶69. Moreover, Batchelder's heat absorbing device 28 is not "fluidly coupled" to the "reservoir" because the cooling liquid in Batchelder's active spreader plate 20 does not flow into or through heat absorbing device 28. *Id.* at ¶70. Instead, the cooling liquid flows "in proximity" to heat absorbing device 28, such

that heat from the cooling liquid is conducted away by device 28 and released into the surrounding atmosphere by the air blown by fan blades 34. Ex. 1006, 5:6-16, 5:28-30; Ex. 2018, ¶70.

Indeed, Dr. Hodes admits that Batchelder does not disclose a "radiator" that is "spaced apart" from the "reservoir," but argues that a person skilled in the art would have been motivated to "modify Batchelder in view of Shin to connect Batchelder's reservoir to an outside or external radiator and a fan" to "*further* increase heat management efficiency." Ex. 1003, ¶99 (emphasis in original); Ex. 2018, ¶71. Notably, Dr. Hodes does not argue that Batchelder's existing heat absorbing device 28 would have been replaced by an external radiator; he instead asserts that a radiator would have been included ***in addition to*** heat absorbing device 28. *See* Ex. 1003, ¶99. Dr. Hodes had to take that position because Batchelder teaches that impeller 54 and fan blades 34 are operated by the same motor and rotor 32, so heat absorbing device 28 (and the associated fan) cannot be eliminated without first reconstructing Batchelder to have a motor and rotor to run impeller 54. Ex. 2018, ¶71. Therefore, Dr. Hodes asserts instead, ***with no support in Batchelder***, that an external radiator would simply be appended to Batchelder's device to "increase heat management efficiency." *See id.* (discussing Ex. 1003, ¶99).

Petitioner's conclusory assertion that an external radiator would improve Batchelder's heat management efficiency is a product of impermissible hindsight.

As Patent Owner's expert, Dr. Tilton, explains: an external radiator would be a superfluous addition to Batchelder because heat from the cooling liquid is already sufficiently removed by heat absorbing device 28. Ex. 2018, ¶72. Dr. Hodes has not explained why Batchelder's heat absorbing device 28 alone is insufficient for heat removal. *Id.* Nor does he explain why or how an external radiator would "increase heat management efficiency" if heat from the cooling liquid is already removed by the existing heat absorbing device. *See generally* Ex. 1003, ¶99.

Moreover, adding an external radiator and fan to Batchelder would have been unreasonable when Batchelder's disclosure is considered as a whole. Ex. 2018, ¶74. Batchelder describes that an objective of the invention is to provide "a ***single*** motor to impel atmospheric motion and the motion of an additional heat transfer fluid." Ex. 1006, 2:52-55 (emphasis added). By adding an external radiator and a fan which has to be operated by a separate second motor, Batchelder's objective and principle of operation — which is to have a single motor operate fan blades 34 and impeller 54 — would have been negated. Ex. 2018, ¶73. A skilled artisan would not have been motivated to make such a change to Batchelder's principle of operation. *In re Ratti,* 270 F.2d at 813 (finding that combinations that require a "change in the basic principles under which the [prior art] was designed to operate" do not render challenged claims obvious); *Plas-Pak Indus., Inc. v. Sulzer Mixpac AG*, 600 F. App'x 755, 758-59 (Fed. Cir. 2015) (non-precedential) (a fundamental change to "a

reference's 'principle of operation' is unlikely to motivate a person of ordinary skill to pursue a combination with that reference.").

Moreover, Batchelder teaches away from using separate motors for the impeller and the fan because of cost and reliability considerations. Ex. 1006, 1:62-2:10 (describing that heat sink technologies that utilize separate motors to impel cooling liquid and to impel air (by running a fan) have distinct cost disadvantage and lack reliability); Ex. 2018, ¶73. Incorporating a second motor into Batchelder would significantly increase complexity and cost, thereby frustrating the objective to provide "a low-cost high reliability heat exchange apparatus." Ex. 1006, 2:40-45; Ex. 2018, ¶73. Modifying Batchelder to have an external radiator would also require hoses and fittings, which would further negate Batchelder's objective to have an integrated system "without hoses or fluid couplings" which increase chances of fluid leakage and thus create reliability concerns. Ex. 1006, 2:56-57; Ex. 2018, ¶73. Thus, modifying Batchelder to have an external radiator and fan would render Batchelder inoperable for its intended purpose of providing an integrated, low-cost, and reliable heat exchange system. *See* Ex. 2018, ¶73. Such a proposed modification cannot be obvious. *Plas-Pak*, 600 F. App'x at 757–58 (a combination that renders prior art "'inoperable for its intended purpose,' may fail to support a conclusion of obviousness.") (citing *In re Gordon,* 733 F.2d 900, 902 (Fed. Cir. 1984)).

Petitioner and Dr. Hodes have not addressed Batchelder's teachings against the proposed modification, even though a reference must be considered as a whole, including the portions that would lead away from the proposed modification. But a skilled artisan considering Batchelder would certainly have weighed any putative benefit of increased heat removal by an external radiator and fan (as argued by Petitioner and Dr. Hodes, but not taught by Batchelder) against the distinct disadvantages of the modification — i.e., increased cost and complexities, and diminished reliability — as taught by Batchelder. *See In re Gurley*, 27 F.3d 551, 553 (Fed. Cir. 1994) (explaining that if a reference teaches away from a modification, that modification is likely to be nonobvious); *Arctic Cat Inc. v. Polaris Indus., Inc*., 795 F. App'x 827, 834 (Fed. Cir. 2019) (non-precedential) ("[A] person of ordinary skill in the art, weighing the putative benefits of the modifications … against the drawbacks of the modification would not have been motivated to combine the two prior art references."). Absent hindsight, a skilled artisan would have had no reason to modify Batchelder, and certainly not by directly contradicting Batchelder's teachings, because Batchelder's existing heat absorbing device 28 would have sufficiently removed heat and the disadvantages/tradeoffs of the modification would not have been reasonably justified. *See* Ex. 2018, ¶¶72, 74.

Cooler Master Co., Ltd. Ex. 1009, Page 47 of 80
Cooler Master Co., Ltd. v. Asetek Danmark A/S
IPR2023-00667

VI. Ground 2 of the Petition Does Not Establish Obviousness of Claims 4, 14, or 19 Based on Batchelder, Shin, and Cheon

Petitioner relies on the combination of Shin and Cheon with Batchelder to argue that the limitations of challenged dependent claims 4, 14, and 19 are met by the prior art. Not so. Claims 4, 14, and 19 are patentable for at least the same reasons as independent claims 1, 8, and 15, as discussed above. Additionally, the limitation "a control system configured to independently control a speed of the pump and a speed of the fan" of claim 14 is not disclosed, taught, or suggested by the asserted prior art. Ex. 2018, ¶55.

A. Batchelder, Shin, and Cheon do not disclose a control system "configured to adjust a rotational speed of a fan and a rotational speed of a pump" as required by claim 14

Petitioner relies on Shin and Cheon to meet the limitation "the control system is configured to adjust a rotational speed of a fan and a rotational speed of a pump." Pet., 59-62; Ex. 2016, 84:4-85:18 (Petitioner's expert, Dr. Hodes, admitting that Batchelder does not disclose a control system for controlling speed of a fan and a pump). But neither Shin nor Cheon discloses controlling fan speed, or using a single control system to control both fan and pump speeds. Ex. 2018, ¶¶55, 56, 57.

Shin discloses controlling a speed of the pump motor by changing the DC voltage. Ex. 1007, ¶[0019]; Ex. 2018, ¶56. But Shin does not disclose controlling a speed of a fan. Ex. 2018, ¶56. Contrary to Petitioner and Dr. Hodes's assertion, although Shin discloses a fan 34 for air-cooling the heat-generating elements 22a,

22b, 22c, and for cooling the heated coolant in heat exchanger 27, *see* Ex. 1007, ¶¶[0024], [0025], Shin does not disclose controlling the speed of fan 34. Petitioner's expert Dr. Hodes admitted this in his deposition:

> Q So, my question is, Shin does not disclose a control system to adjust the speed of a fan and a pump, right?
>
> . . .
>
> THE WITNESS: Shin does not disclose it, but if I'm allowed to add, he -- he does disclose that one would want to control the speed of the pump. Obviously, you would need a control system to do that.
>
> . . .
>
> Q. ***But Shin says nothing about adjusting the speed of the fan, right?***
>
> ***A. Right.***

Ex. 2016, 86:17-87:8 (emphasis added).

Likewise, Cheon only discloses controlling the circulation of coolant by turning a pump motor on/off based on sensed temperatures of the heat-generating electronic components. Ex. 1008, 6:3-16; Ex. 2018, ¶57. Cheon does not disclose a fan for cooling the electronic components, or for cooling radiator 42, and so Cheon does not disclose controlling speed of a fan. Ex. 2018, ¶57; Ex. 2016, 89:13-90:14

(Petitioner's expert, Dr. Hodes, agreeing that Cheon does not disclose a fan or controlling speed of a fan, and further that Cheon teaches use of fans as disadvantageous because of noise and dust).

Thus, the limitation "the control system configured to adjust a rotational speed of a fan and a rotational speed of a pump" is completely missing from Batchelder, Shin, and Cheon.

Moreover, Dr. Hodes is incorrect that "a POSITA would understand that Shin discloses or suggests a control system as claimed in Claim 9 wherein the control system is configured to adjust a rotational speed of a fan (air fan 34) and a rotational speed of the pump (pump 5) . . . ." Ex. 2018, ¶58 (quoting Ex. 1003, ¶137). There is no such disclosure or suggestion in Shin about controlling fan speed. Ex. 2018, ¶58. Nor it would have been obvious in 2003 to provide a ***single*** control system to control the speed of a pump and the speed of a fan. *Id*. In fact, Dr. Hodes has provided no rationale or motivation for "a" (one) control system to control both the fan and the pump speeds. *Id*. Given that fan 34 and pump 5 in Shin are driven by separate motors, the obvious configuration would have been to use two separate control systems (not "a" system) to control the fan speed and the pump speed individually. *Id.* Therefore, even if Dr. Hodes's asserted motivation to control fan speed is accepted, the limitation "the control system is configured to adjust a rotational speed of a fan and

a rotational speed of a pump" is still completely missing from Batchelder, Shin, and Cheon.

To the extent Petitioner argues that "a" can mean one or more control systems, that interpretation is belied by the specification of the '354 patent. *Harari v. Lee*, 656 F.3d 1331, 1341 (Fed. Cir. 2011) (explaining there is not "a hard and fast rule that 'a' always means one or more than one," but that the limitation must be read "in light of the claim and specification to discern its meaning," and "[w]hen the claim language and specification indicate that 'a' means one and only one, it is appropriate to construe it as such even in the context of an open-ended 'comprising' claim."). Unlike Shin, the '354 patent explicitly discloses a single control system with a feedback loop to regulate both the rotational speed of the pump motor and the rotational speed of the fan motor, so that the regulation and feedback mechanisms take into account both the cooling capacity and "which of the two cooling means, i.e., the pump and the air fan, is generating the most noise." Ex. 1001, 12:4-12; Ex. 2018, ¶59. "Thus, if the air fan generally is generating more noise than the pump, then the regulation will reduce the rotational speed of the air fan before reducing the rotational speed of the pump, whenever a lower cooling capacity is needed." Ex. 1001, 12:4-12; Ex. 2018, ¶59. In other words, the '354 patent teaches a single control system for the air fan and the pump, even when they are operated independently by separate motors, so that regulation of fan speed and pump speed can take into

account the overall noise generation. Ex. 2018, ¶59. There is no such teaching of a single control system in Shin. *Id*. In fact, the obvious configuration would have been to have two separate control systems in Shin to control the fan and pump speeds separately. *Id.* at ¶58. Absent hindsight, there is no reason to modify Shin to have a single control system to control both fan and pump speeds. *Id.* at ¶60.

Accordingly, Batchelder, Shin, and Cheon, alone or in combination, do not disclose or suggest 1) controlling the speed of a fan that directs air through a radiator, or 2) providing "a" (i.e., a single) control system to control both pump speed and fan speed. *Id*. Even though Dr. Hodes tried to fill the gap in the prior art disclosures through unsupported assertions that a person skilled in the art would have "concerns about controlling the speed of the fan," Ex. 1003, ¶134, he failed to provide any motivation or rationale for using "a" control system to control both the fan and the pump speeds, as required by claim 14, other than a hindsight attempt to arrive at the claimed invention. Ex. 2018, ¶60. This is an independent reason why claim 14 of the '354 patent should be found patentable.

VII. Secondary Considerations Weigh Against Obviousness of the Challenged Claims

Objective evidence of nonobviousness "is not just a cumulative or confirmatory part of the obviousness calculus, but constitutes independent evidence of nonobviousness." *Ortho-McNeil Pharm. Inc. v. Mylan Labs., Inc.*, 520 F.3d 1358, 1365 (Fed. Cir. 2008); *see also In re Cyclobenzaprine Hydrochloride Extended-*

Release Capsule Patent Litig., 676 F.3d 1063, 1075-76 (Fed. Cir. 2012) (noting that a fact finder "may not defer examination of the objective considerations until after the fact finder makes an obviousness finding"). Indeed, the Federal Circuit has said that secondary considerations "can be the most probative evidence of nonobviousness in the record, and enables the . . . court to avert the trap of hindsight." *Crocs, Inc. v. Int'l Trade Comm'n*, 598 F.3d 1294, 1310 (Fed. Cir. 2010); *see also Leo Pharm. Prods., Ltd. v. Rea*, 726 F.3d 1346, 1358 (Fed. Cir. 2013) ("Objective indicia of nonobviousness play a critical role in the obviousness analysis [and] can be the most probative evidence of nonobviousness in the record"). Here, compelling objective evidence supports patentability of all challenged claims.

A. There is a Presumed Nexus Between Asetek's Patented Design and the Objective Indicia of Nonobviousness

Asetek's patented combination of a pump, reservoir, and a cold plate into a single pump unit provides the benefits of improved pumping and heat removal efficiencies in a compact (narrow profile) design that enables the pump unit to be installed directly on the CPU of a computer motherboard. Ex. 2018, ¶¶28, 29, 30. In addition to improved efficiency and compactness, Asetek's patented designs have greatly reduced and/or eliminated the risk of coolant leakage and have enabled pre-filled (factory assembled and sealed) liquid cooling products that are easy to install by users. *Id.* Asetek's patented split-flow design has also made heat removal more efficient. *Id.* at ¶29. For example, the design disclosed and claimed in the '354 patent

provides that coolant enters the "lower chamber" from the "upper chamber" through a first passage that is substantially central to the "lower chamber," as shown in Figure 9 of the '354 patent. This arrangement enhances heat-removal efficiency because the center of the "heat exchanging interface" is positioned right above the heat-generating processing unit, which is hotter than the peripheries of the interface. *Id.* Having coolant enter at the center of the "lower chamber" (as opposed to the perimeter) ensures more efficient heat removal from the hottest and the most critical region of the "heat exchanging interface." *Id.* Moreover, the patented split-flow design reduces pressure drop and improves flow rate through the device. *Id.* For all these reasons, Asetek's patented designs have improved liquid cooling efficiency and reliability while also reducing manufacturing costs/price (Ex. 2018, ¶¶28-30).

When a product embodies the claimed features, and is coextensive with them, then a nexus is presumed between the asserted objective indicia of nonobviousness and the patented invention. *Polaris Indus., Inc. v. Arctic Cat, Inc.*, 882 F.3d 1056, 1072 (Fed. Cir. 2018) ("We presume that such a nexus applies for objective indicia when the patentee shows that the asserted objective evidence is tied to a specific product and that product 'embodies the claimed features, and is coextensive with them.'") (*quoting Brown & Williamson Tobacco Corp. v. Philip Morris Inc.*, 229 F.3d 1120, 1130 (Fed. Cir. 2000)); *see also FOX Factory, Inc. v. SRAM, LLC*, 944 F.3d 1366, 1374, 1377-78 (Fed. Cir. 2019). Asetek's Generation 5, 6, and 7 products

Cooler Master Co., Ltd. Ex. 1009, Page 54 of 80
Cooler Master Co., Ltd. v. Asetek Danmark A/S
IPR2023-00667

embody and are coextensive with the independent claims of the ’354 patent. Ex. 2018, ¶75. A representative claim chart for the Corsair H80i v2 (an Asetek product employing its Generation 5 design) follows:

Claim	U.S. Patent No. 10,078,354	Corsair H80i v2 Liquid Cooler
1	A cooling system for a computer system processing unit, comprising:	The Corsair H80i v2 Liquid Cooler is a liquid cooling system for a computer system processing unit.
	a reservoir configured to circulate a cooling liquid therethrough, the reservoir including:	A reservoir is configured to circulate a cooling liquid therethrough.
	the reservoir including an upper chamber and a lower chamber, the upper chamber and the lower chamber being separate chambers that are vertically spaced apart and separated by at least a horizontal wall, the upper chamber and the	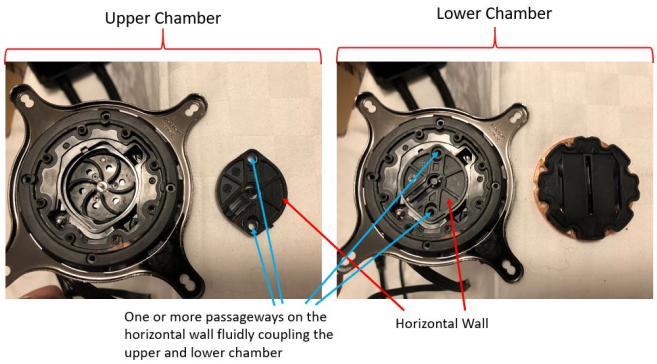 The reservoir includes an upper chamber and a lower chamber. The upper chamber and the lower chamber are separate

Claim	U.S. Patent No. 10,078,354	Corsair H80i v2 Liquid Cooler
	lower chamber being fluidly coupled by one or more passageways, at least one of the one or more passageways being positioned on the horizontal wall, the heat exchanging interface being removably coupled to the reservoir such that an inside surface of the heat exchanging interface is exposed to the lower chamber of the reservoir	chambers that are vertically spaced apart and separated by at least a horizontal wall. The upper chamber and the lower chamber are fluidly coupled by one or more passageways. At least one of the one or more passageways is positioned on the horizontal wall. 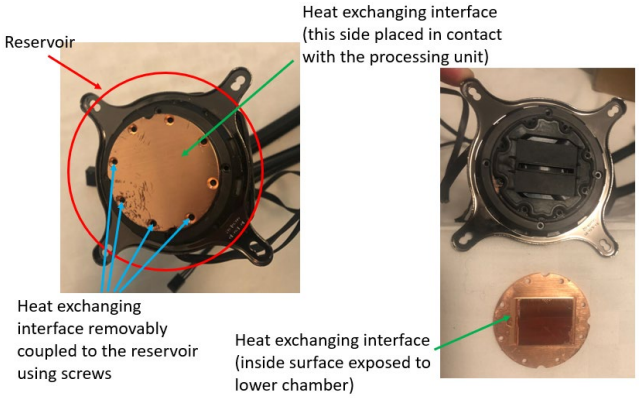 The heat exchanging interface is removably coupled (e.g., using screws or fasteners) to the reservoir such that an inside surface of the heat exchanging interface is exposed to the lower chamber of the reservoir.
	an upper chamber and a lower chamber, wherein the upper and lower chamber are vertically displaced fluid-containing chambers that	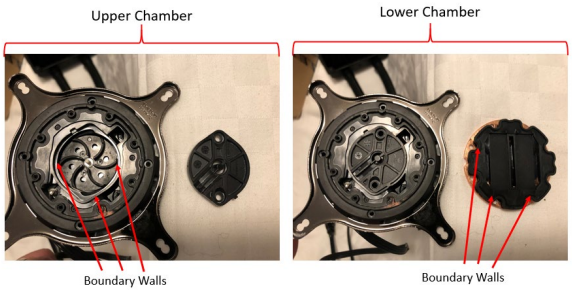

Claim	U.S. Patent No. 10,078,354	Corsair H80i v2 Liquid Cooler
	are each surrounded by boundary walls;	The upper chamber and the lower chamber are vertically displaced, fluid containing chambers. Each are surrounded by boundary walls.
	a first passage that fluidly couples the lower chamber to the upper chamber, where the first passage is substantially central to the lower chamber;	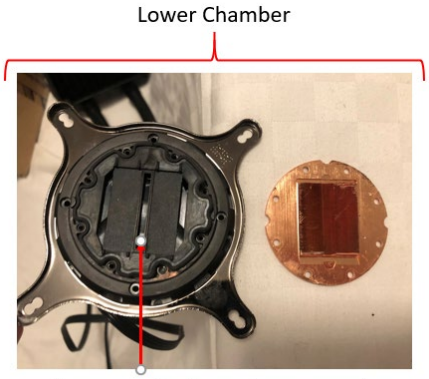 A first passage fluidly coupling upper and lower chambers and central to lower chamber The first passage fluidly couples the lower chamber to the upper chamber and is substantially central to the lower chamber.
	a second passage positioned at a perimeter of the lower chamber;	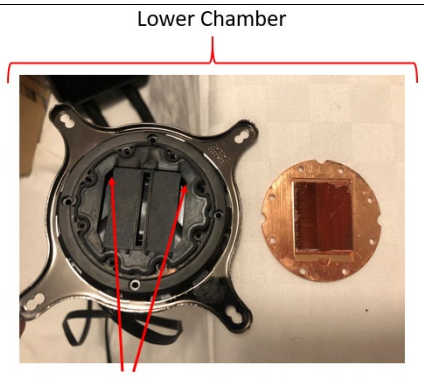 A second passage positioned at a perimeter of the lower chamber A second passage is positioned at a perimeter of the lower chamber.

Claim	U.S. Patent No. 10,078,354	Corsair H80i v2 Liquid Cooler
	wherein the lower chamber includes a plurality of channels configured to split the flow of cooling liquid and direct the cooling liquid from the central region toward the perimeter of the lower chamber;	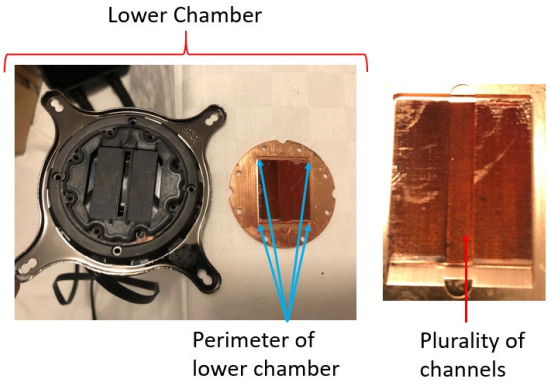 The lower chamber includes a plurality of channels and an elongated recess in the channels that is transverse to the direction of the channels and wherein the recess is located central to the length of the channels. The channels are configured to split the flow of cooling liquid and direct cooling liquid from the central region (i.e. from the recess) toward the perimeter of the lower chamber.
	a heat exchanging interface attached to the reservoir to form a boundary wall of the lower chamber, the heat exchanging interface provides thermal contact between the processing	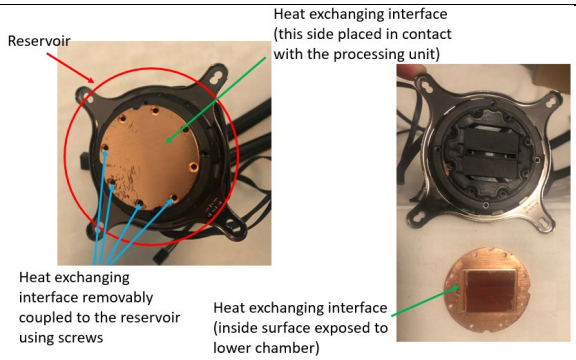 A heat exchanging interface is attached to the reservoir to form a boundary wall of the

Claim	U.S. Patent No. 10,078,354	Corsair H80i v2 Liquid Cooler
	unit and the cooling liquid;	lower chamber and provides thermal contact between the processing unit and the cooling liquid in the thermal exchange chamber.
	a pump having a motor and an impeller, the impeller being positioned within the upper chamber of the reservoir; and	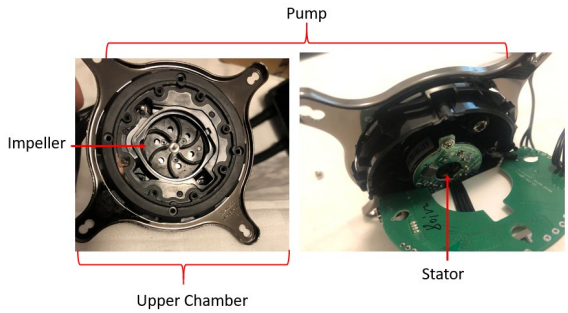 The pump has a motor and an impeller. The impeller is positioned within the upper chamber of the reservoir when the pump unit is assembled.
	a radiator spaced apart from and fluidly coupled to the reservoir.	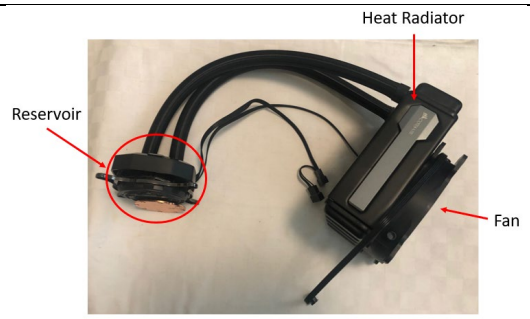 A radiator is spaced apart from the reservoir and fluidly coupled to the reservoir.
8.	A cooling system for a computer system processing unit, comprising:	The H80i v2 Liquid Cooler is a liquid cooling system for a computer system processing unit.

Claim	U.S. Patent No. 10,078,354	Corsair H80i v2 Liquid Cooler
	a reservoir configured to circulate cooling liquid therethrough, the reservoir including:	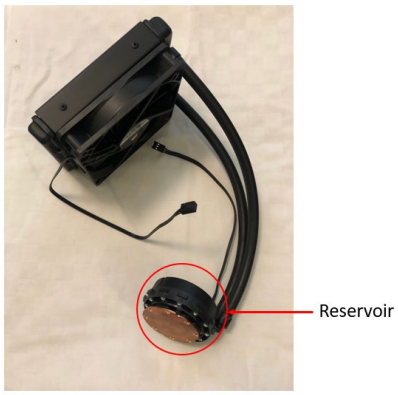 A reservoir is configured to circulate a cooling liquid therethrough.
	an upper chamber and a lower chamber, wherein the upper chamber and the lower chamber are vertically displaced fluid-containing chambers that are each surrounded by boundary walls, a first passage that fluidly couples the lower chamber to the upper chamber, where the first passage is substantially	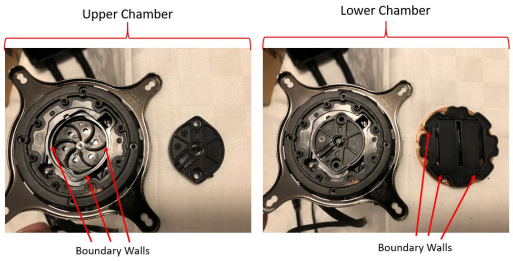 A upper chamber and a lower chamber are vertically displaced, fluid-containing chambers that are each surrounded by boundary walls. 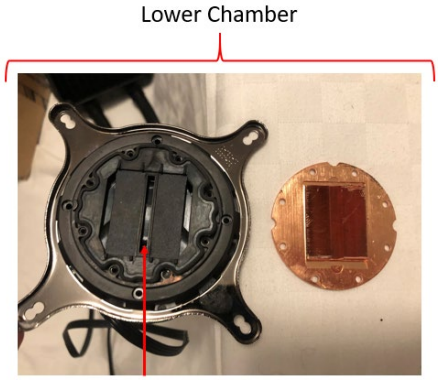 A first passage fluidly coupling upper and lower chambers and central to lower chamber

Claim	U.S. Patent No. 10,078,354	Corsair H80i v2 Liquid Cooler
	central to the lower chamber;	A first passage fluidly couples the lower chamber to the upper chamber and is substantially central to the lower chamber.
	a second passage positioned at a perimeter of the lower chamber;	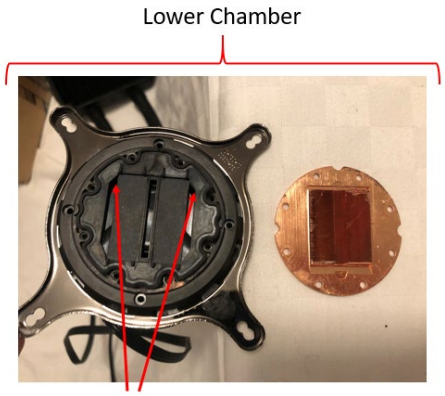 A second passage is positioned at a perimeter of the lower chamber.
	wherein the lower chamber includes a plurality of channels configured to direct the flow of cooling liquid across the lower chamber;	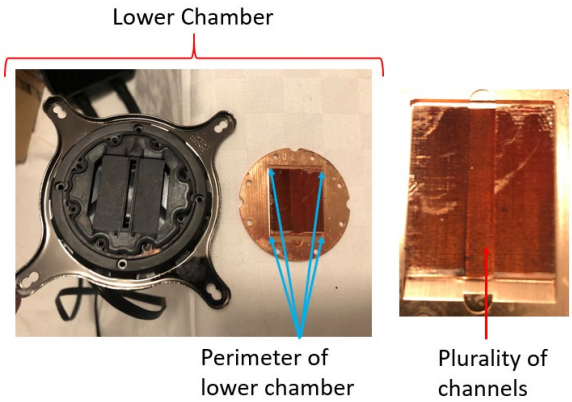 The lower chamber includes a plurality of channels configured to direct the flow of cooling liquid across the lower chamber.

Claim	U.S. Patent No. 10,078,354	Corsair H80i v2 Liquid Cooler
	a heat exchanging interface attached to the reservoir to form a boundary wall of the lower chamber, the heat exchanging interface provides thermal contact between the processing unit and the cooling liquid;	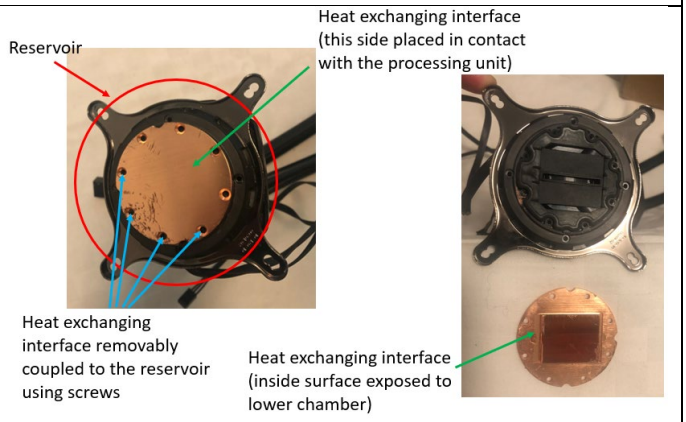 A heat exchanging interface is attached to the reservoir and forms a boundary wall of the lower chamber. The heat echanging interface provides thermal contact between the processing unit and the cooling liquid in the thermal exchange chamber.
	a pump having a motor and an impeller, the impeller being positioned within the upper chamber of the reservoir; and	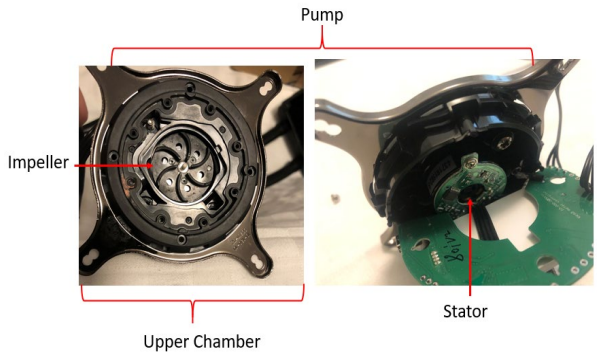 A pump has a motor and an impeller. The impeller is positioned within the upper chamber of the reservoir when the pump is assembled.

Claim	U.S. Patent No. 10,078,354	Corsair H80i v2 Liquid Cooler
	a radiator spaced apart from and fluidly coupled to the reservoir.	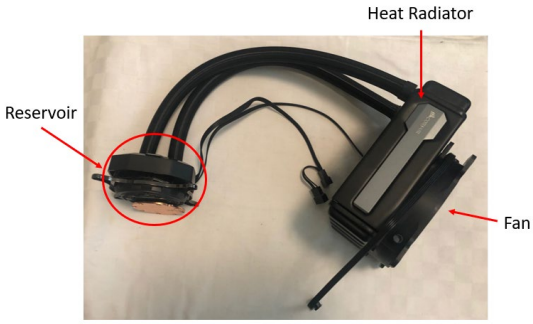 A radiator is spaced apart from and fluidly coupled to the reservoir.
15.	A cooling system for a computer system processing unit, comprising:	The Corsair H80i v2 Liquid Cooler is a liquid cooling system for a computer system processing unit.
	a reservoir configured to circulate a cooling liquid therethrough, the reservoir including:	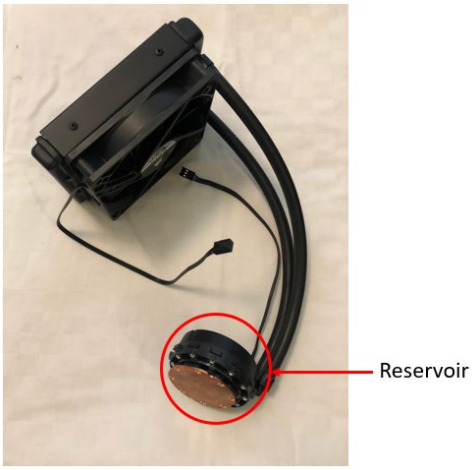 A reservoir is configured to circulate a cooling liquid therethrough.

Claim	U.S. Patent No. 10,078,354	Corsair H80i v2 Liquid Cooler
	an upper chamber and a lower chamber, wherein the upper chamber and the lower chamber are vertically displaced fluid-containing chambers that are each surrounded by boundary walls, a first passage that fluidly couples the lower chamber to the upper chamber;	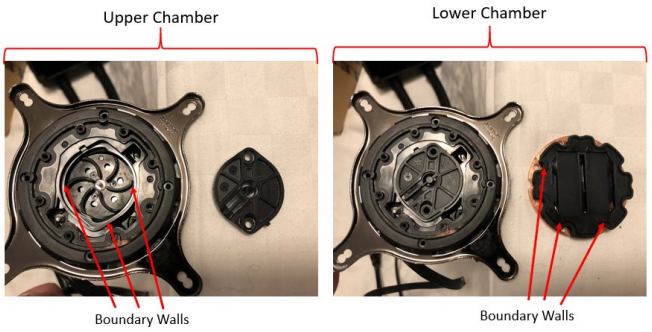 An upper chamber and a lower chamber are vertically displaced fluid-containing chambers that are each surrounded by boundary walls. 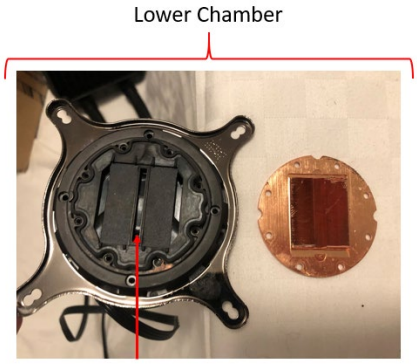 A first passage fluidly coupling upper and lower chambers and central to lower chamber A first passage fluidly couples the lower chamber to the upper chamber.

Claim	U.S. Patent No. 10,078,354	Corsair H80i v2 Liquid Cooler
	a second passage positioned at a perimeter of the lower chamber;	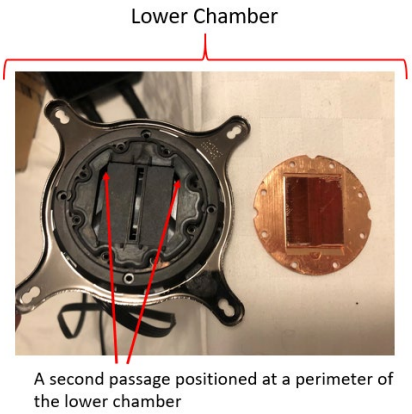 A second passage is positioned at a perimeter of the lower chamber.
	wherein the first passage directs the cooling liquid into the lower chamber where the cooling liquid splits and is directed along a plurality of channels from a central region of the lower chamber outward where the cooling liquid is collected and directed from the lower chamber	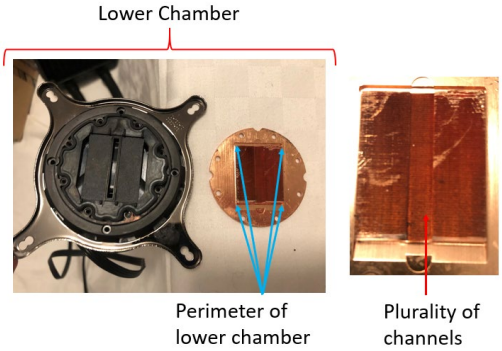 The first passage is configured to direct cooling liquid into the lower chamber, such that the cooling liquid splits and is directed along a plurality of channels from a central region of the lower chamber (and a central region of the plurality of channels) outward where the cooling liquid is collected and directed from the lower chamber through the second passage.

Claim	U.S. Patent No. 10,078,354	Corsair H80i v2 Liquid Cooler
	through the second passage;	
	a heat exchanging interface attached to the reservoir to form a boundary wall of the lower chamber, the heat exchanging interface provides thermal contact between the processing unit and the cooling liquid;	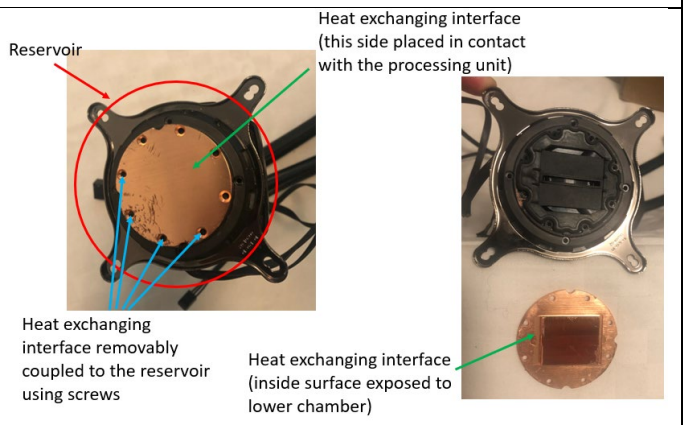 A heat exchanging interface is attached to the reservoir (i.e. with screws) to form a boundary wall of the lower chamber. The heat exchanging interface provides thermal contact between the processing unit and the cooling liquid.
	a pump having a motor and an impeller, the impeller being positioned within the upper chamber of the reservoir; and	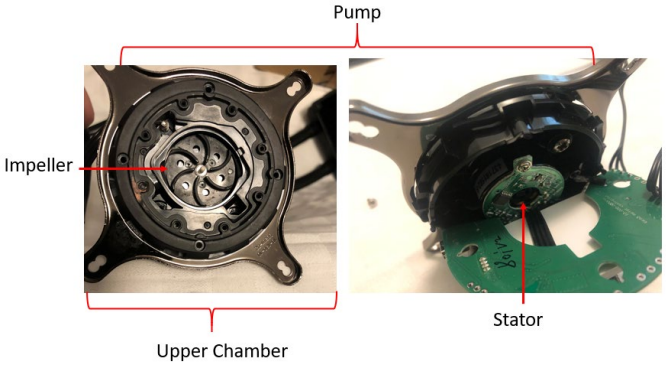 A pump having a motor and an impeller. The impeller is positioned within the upper

Claim	U.S. Patent No. 10,078,354	Corsair H80i v2 Liquid Cooler
		chamber of the reservoir when the pump is assembled.
	a radiator spaced apart from and fluidly coupled to the reservoir.	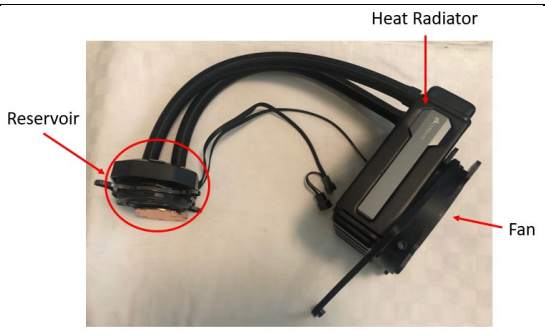 A radiator is spaced apart from and fluidly coupled to the reservoir.

Ex. 2018, ¶75 and Ex. B. As shown in the Declaration of Asetek's expert, Dr. Donald Tilton, Generation 6 and 7 products, which share the same fundamental Asetek technology as the Generation 5 products, also embody and are coextensive with the independent claims of the '354 patent. *Id.* at ¶¶75-76. Accordingly, there is a presumed nexus between the patented invention and the objective indicia of nonobviousness discussed in detail below.

B. Objective Indicia Demonstrate the Nonobviousness of the Challenged Claims

1. Long-Felt Need and Failure of Others

Evidence of a long-felt and unresolved need in the industry for the solution offered by the patented invention supports a finding that the invention would not

have been obvious at the time the invention was made. *Tec Air, Inc. v. Denso Mfg. Michigan Inc.*, 192 F.3d 1353, 1361 (Fed. Cir. 1999); *In re Mahurkar Double Lumen Hemodialysis Catheter Patent Litig.*, 831 F. Supp. 1354, 1378 (N.D. Ill. 1993), *aff'd*, 71 F.3d 1573 (Fed. Cir. 1995). Moreover, evidence of failed attempts by others supports a finding that the patented invention would not have been obvious. *Advanced Display Sys., Inc. v. Kent State Univ.*, 212 F.3d 1272, 1285 (Fed. Cir. 2000); *Minn. Mining & Mfg. Co. v. Johnson & Johnson Orthopaedics, Inc.*, 976 F.2d 1559, 1574-75 (Fed. Cir. 1992) (reasoning that a competitors' failure to develop the patented invention suggested nonobviousness).

Before the Asetek invention, the computing industry was facing a growing need for liquid cooling systems for computers to overcome the limitations of air-cooling and the deficiencies of the prior-art modular approaches to liquid cooling. *See* Ex. 2018, ¶¶26, 27. For example, earlier liquid cooling devices/systems were often bulky and comprised of separate components (selected and purchased separately, or in kits) that required assembly by the customer and faced leakage issues. *Id.* at ¶28. An example of such prior art systems is shown in Figure 3 of the '354 patent. *Id.* The products embodying the claims of the '354 patent present solutions to these problems and also provide better performance and efficiencies in both operation (including lower power consumption/cost and noise) and in manufacturing. *Id.* at ¶¶28-30.

Asetek was not alone in recognizing this need and/or in attempting to develop improved liquid cooling systems/devices to meet it. The Petitioner, CoolIT, tried but failed to meet this need from about 2005-2009, when CoolIT designed and released a series of liquid cooling products (see annotated photos below) with a design very different from Asetek that failed to gain any real traction in the market:

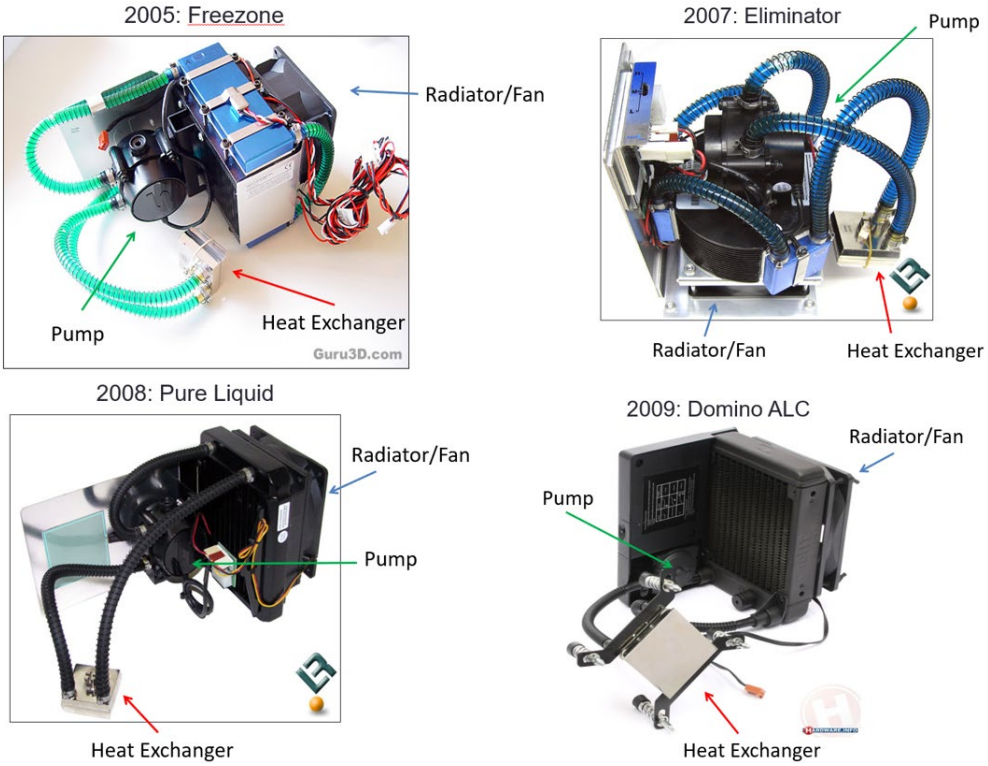

See Ex. 2027, 94:21-101:2 (CoolIT deposition testimony from litigation regarding the Freezone, Eliminator, Pure Liquid, and Domino), explaining photos in Ex. 2028 (marked as Ex. 5 during the deposition). All of these failed CoolIT products from 2005-2009 had the same fundamental design: the pump assembly was integrated into the radiator assembly, separate and distinct from the heat exchanger/cold plate component that was placed in thermal contact with the CPU. *Id*. None of these early

CoolIT products or designs gained any real traction in the market (Ex. 2029, 364:10-366:25 (Asetek CEO testimony at trial), explaining Ex. 2030 (marked as slide 24 during the trial)).

Thus, CoolIT's engineers, despite being motivated to develop a commercial product to address the need for liquid cooling solutions, failed to meet the market need, or to arrive at the reservoir design conceived and patented by Patent Owner Asetek's CEO, Andre Eriksen, which combined a prior art pump and heat exchanger/cold plate into a dual chambered "reservoir" that was bounded by a cold plate, as claimed in the '354 patent.

In approximately 2011, CoolIT began making and selling products to Corsair (the H60, H80, and H100, shown below) that abandoned CoolIT's prior, failed design and instead adopted Asetek's design: a dual chambered reservoir combining a pump and a heat exchanger/cold plate, as recited in the limitations of the independent claims of the '354 patent.

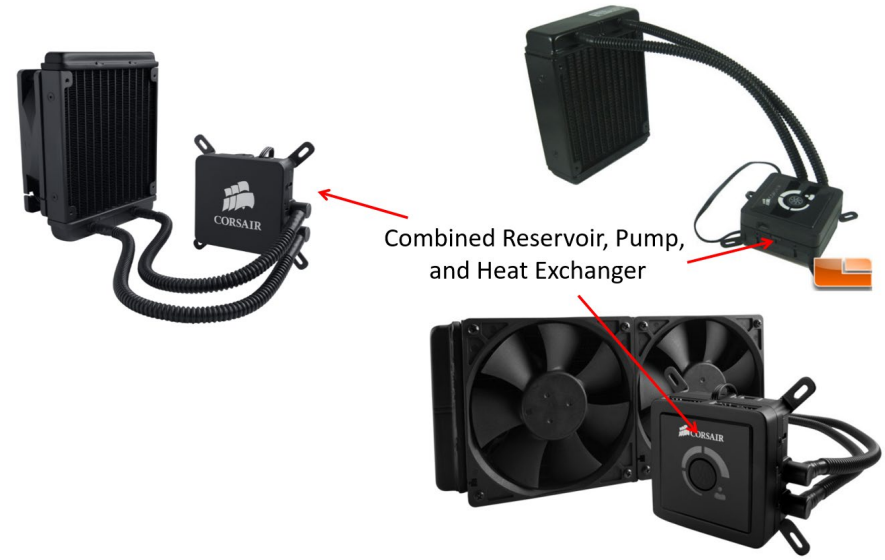

Ex. 2027, 104:9-105:1; 106:16-109:19 (CoolIT deposition testimony in litigation admitting that its H60, H80, and H100 products (shown above) combined the pump and heat exchanger/cold plate having split-flow design), explaining photos in Ex. 2028 (marked as Ex. 5 during the deposition); *see also* Ex. 2029, 366:18-367:10; Ex. 1004 (Asetek's infringement contentions against CoolIT for infringement of the '354 patent by CoolIT's products).

CoolIT has sold and continued to sell products covered by the claims of Asetek's '354 patent (*see* Ex. 1004) and has never returned to its separate pump/heat exchanger designs. This is strong and direct evidence that the design of the '354 patent resolved a long-felt need and that other motivated parties — like CoolIT — failed to arrive at the same nonobvious design.

2. Commercial success

Products embodying the challenged claims of the ’354 patent have demonstrated substantial commercial success. Commercial success of an invention is evidence that the invention would not have been obvious. *See, e.g.*, *Rambus Inc. v. Rea*, 731 F.3d 1248, 1257 (Fed. Cir. 2013); *Leo Pharm. Prods.*, 726 F.3d at 1358; *Tec Air*, 192 F.3d at 1360.

Asetek’s own products are commercially successful. Asetek is currently selling hundreds of thousands of its Generation 5, 6, and 7 products annually. Ex. 2014, ¶6. Each of these products embodies and is coextensive with the independent claims of the ’354 patent. Ex. 2018, ¶75. Thus, there is a presumption of a nexus between the commercial success of these products and the patented design (as discussed above). Asetek sells these products to many of the leading companies in the industry, including for example Alienware, ASUS, HP, Lenovo, MSI, NAXT, Fractal Design and EVGA. Ex. 2014 at ¶3.

Moreover, the volume of units Asetek sells of its Gen 5, 6, and 7 products dwarfs prior art alternatives, such as kit-based cooling solutions (sometimes referred to as “separates”). For example, in 2019 Asetek was considering an acquisition of EKWB, a company that sells cooling solutions including the EK Performance 240 Starter Liquid Cooling Kit:

Ex. 2014 at ¶¶8, 9.

In the course of considering the acquisition, Asetek attempted to estimate the size of the market for kit-based solutions. *Id.* Based on EK's estimated annual revenue and the MSRP of EK's products, Asetek estimated that the total market for kit-based solutions was between 110,000 and 220,000 units annually. *Id.* at ¶¶9-16. Asetek's annual unit sales in recent years, shown in the table below, far surpass that (*id.* at ¶6):

	2017	**2018**	**2019**	**2020 (Jan-Sept.)**
Gen 5, 6, and 7 Units	670,009	828,356	771,184	672,427

Moreover, this data presents only a partial picture, as it does not include infringing units sold by others—like CoolIT—which when accounted for, would be even stronger evidence of the commercial success of Asetek's patented designs. *Id.* at ¶7.

3. Industry Praise

Asetek is widely regarded as the industry leader in liquid cooling solutions and its Gen 5, 6, and 7 products have received much praise and industry recognition. "Praise for the invention, including awards accorded to the inventors for their invention, are further evidence of the [invention's nonobviousness]." *Corning Glass Works v. Sumitoto Elec. U.S.A. Inc.*, 671 F. Supp 1369, 1398 (S.D.N.Y. 1987), *aff'd* 868 F.2d 1251 (Fed. Cir. 1989); *see also Allen Archery, Inc. v. Browning Mfg. Co.*, 819 F.2d 1087, 1092 (Fed. Cir. 1987).

Here, Asetek's Gen 5, 6, and 7 products, which embody the challenged claims of the '354 patent (Ex. 2018, ¶75), regularly receive awards and praise from the industry. Ex. 2014, ¶16. For example, it is common for liquid cooling products to be tested, disassembled, analyzed, and reviewed by online publications, who then issue recommendations and awards for the highest performing products. *Id.* Products using Asetek's Gen 5, 6, and 7 designs (many of which are sold under other brand names) have received numerous positive ratings and reviews. *Id.* at ¶¶16-23. For example, industry professionals have said the following:

<u>Praise for Gen 5 Products:</u>

> Our disassembly of the Kraken X42 liquid cooler showed the device's internals, explained that the high-quality of design and component selection made for a promising set of tests, but didn't dive into the details . . . .

> NZXT's new Kraken series gets our "Quality Build" award for exceptional build quality of a CPU cooler.

Ex. 2014, ¶17; Ex. 2021 at 1, 16.

<u>Praise for Gen 6 Products:</u>

Performance	100%
Quality	99%
Features	94%
Value	80%
Overall	**93%**

The Bottom Line

ASUS took an AIO that we never thought would be amazing and blew our minds with the ROG STRIX LC 120 RGB. There is a massive amount of performance, but there is also a serious amount of noise to deal with. Then there is that price, but at the same time, we can't help but admire this cooler!

Ex. 2014, ¶18; Ex. 2022 at 24.

> Asetek has given us a great example of a product when a company listens to its customers to make the necessary upgrades to one of their items. This is even more important given the fact that it is such a niche product and so far it still is the only true option for a 92 mm AIO. . . . To conclude this is the cooler to get if you want to enjoy a hungry multi-core CPU or overclock the one you have in a small form factor case that only accepts a 92 mm AIO.

Ex. 2014, ¶19; Ex. 2023 at 18.

Praise for Gen 7 Products:

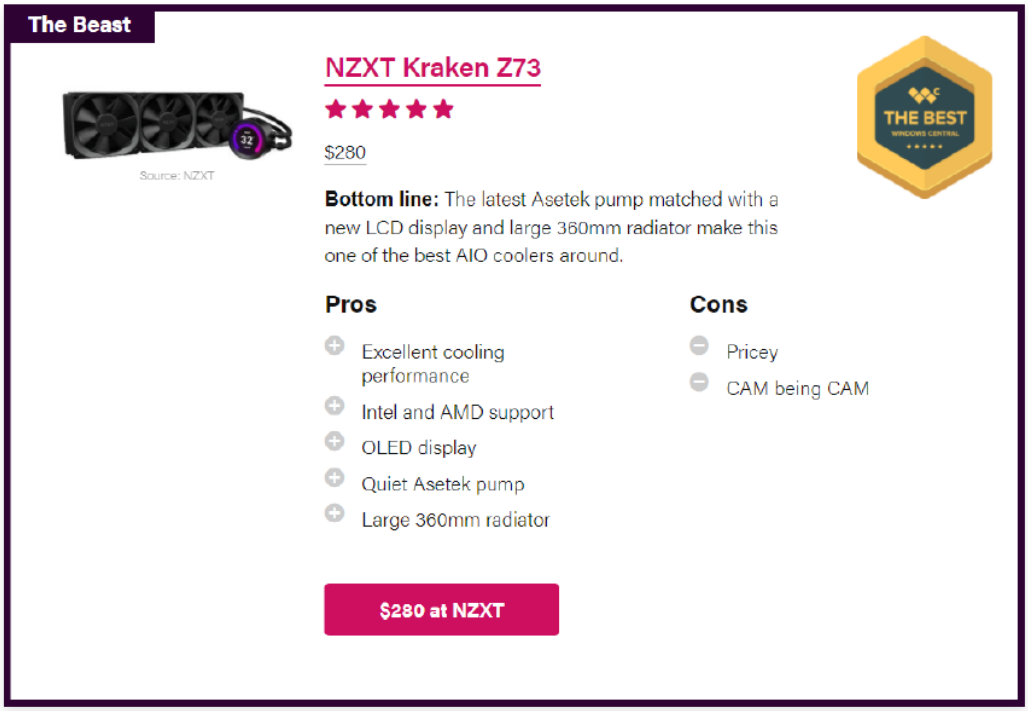

Ex. 2014, ¶20; Ex. 2024 at 1.

> All in all, the NZXT Kraken Z73 is a first-class all-in-one water cooling system that we can absolutely recommend! With this strong overall performance, the NZXT Kraken Z73 receives our OCinside.de Overclocking Dream Award.

Ex. 2014, ¶21; Ex. 2025 at 54.

> The heart of the Kraken Z73 is a 7th-gen pump that promises better flow and reliability.
>
> . . .
>
> Interestingly, we're seeing performance AIOs compete with custom watercooling solutions and edging them out in some instances.

> However, this sometimes does come at a significant cost, as the NZXT Kraken Z73's $280 price approaches open-loop watercooling territory.
>
> But those who do choose the Kraken Z73 won't likely be disappointed or bored with this cooler. Its performance is great.

Ex. 2014, ¶22; Ex. 2026 at 2, 9.

The objective indicia of nonobviousness — long-felt but unmet need, commercial success and praise — undermine CoolIT's assertion that the challenged claims of the '354 patent would have been obvious to one of ordinary skill in the art. In particular, the objective indicia of nonobviousness outweigh Petitioner's hindsight-driven arguments. Petitioner has failed to prove the obviousness of the challenged claims and the Board should thus confirm their patentability.

VIII. Conclusion

Petitioner has not shown by a preponderance of the evidence that the challenged claims are obvious. Several limitations of the challenged claims are not disclosed or suggested in the asserted prior art. And Petitioner has not shown that a person skilled in the art would have been motivated, or would have had a reasonable expectation of success, to modify the asserted prior art to arrive at the claimed invention. The secondary considerations discussed above also support nonobviousness of the claims. The patentability of the challenged claims should therefore be confirmed.

Cooler Master Co., Ltd. Ex. 1009, Page 77 of 80
Cooler Master Co., Ltd. v. Asetek Danmark A/S
IPR2023-00667

Respectfully submitted,

Dated: November 30, 2020

By: */Arpita Bhattacharyya/*
Arpita Bhattacharyya
Backup Counsel for Patent Owner
Reg. No. 63,681

Cooler Master Co., Ltd. Ex. 1009, Page 78 of 80
Cooler Master Co., Ltd. v. Asetek Danmark A/S
IPR2023-00667

CERTIFICATE OF COMPLIANCE

Pursuant to 37 C.F.R. § 42.24(d), I, Arpita Bhattacharyya, certify that **PATENT OWNER'S RESPONSE** contains 12,919 words, excluding those portions identified in 37 C.F.R. § 42.24(b), as measured by the word-processing system used to prepare this paper.

Dated: November 30, 2020

By: */Arpita Bhattacharyya /*
Arpita Bhattacharyya
Reg. No. 63,681

CERTIFICATE OF SERVICE

Pursuant to 37 C.F.R. § 42.6(e), I, William Esper, certify that on November 30, 2020, a copy of **PATENT OWNER'S RESPONSE and EXHIBITS 2013, 2014, 2016-2018, 2020-2030** were served upon the below-listed counsel by electronic mail:

Heath J. Briggs
Greenberg Traurig, LLP
1144 15th Street, Suite 3300
Denver, CO 80202
BriggsH@gtlaw.com

Kyle D. Chen
Xavier M. Brandwajn
Greenberg Traurig, LLP
1900 University Avenue, 5th Floor
East Palo Alto, CA 94303
kchen@gtlaw.com
BrandwajnX@gtlaw.com

Petitioner has consented to service by electronic mail.

Dated: November 30, 2020

By: /William Esper/
William Esper
Legal Assistant
FINNEGAN, HENDERSON, FARABOW, GARRETT & DUNNER, LLP