US 20060185830A1

(19) United States

(12) Patent Application Publication

(10) Pub. No.: US 2006/0185830 A1

(43) Pub. Date: Aug. 24, 2006

Duan

(54) COOLING PLATE MODULE

(75) Inventor: **Qiang-Fei Duan**, Chung-Ho City (TW)

Correspondence Address:
HDSL
4331 STEVENS BATTLE LANE
FAIRFAX, VA 22033 (US)

(73) Assignee: **Cooler Master Co. Ltd.**

(21) Appl. No.: **11/060,442**

(22) Filed: **Feb. 18, 2005**

Publication Classification

(51) **Int. Cl.**
F28D 15/00 (2006.01)

(52) **U.S. Cl.** **165/104.33**

(57) **ABSTRACT**

A cooling plate module includes a cooling plate and a liquid driving module. The liquid driving module includes an accommodation chamber and a liquid driving unit used to driving cooling liquid. The liquid driving module includes a liquid inlet communicated to the accommodation chamber and a first liquid outlet is communicated to the bottom of the accommodation chamber. A cap encloses the first liquid outlet and a second liquid outlet is defined on the cap. The cooling plate is assembled with the cap to define a closed space therein and the first liquid outlet is corresponding to the heat-dissipating plates. Therefore, there is no duct connecting between the cooling plate and the liquid driving module, the stagnant problem caused by pressure difference can be prevented and the cool liquid can directly flush the heat-dissipating plates for enhancing heat dissipation efficiency.

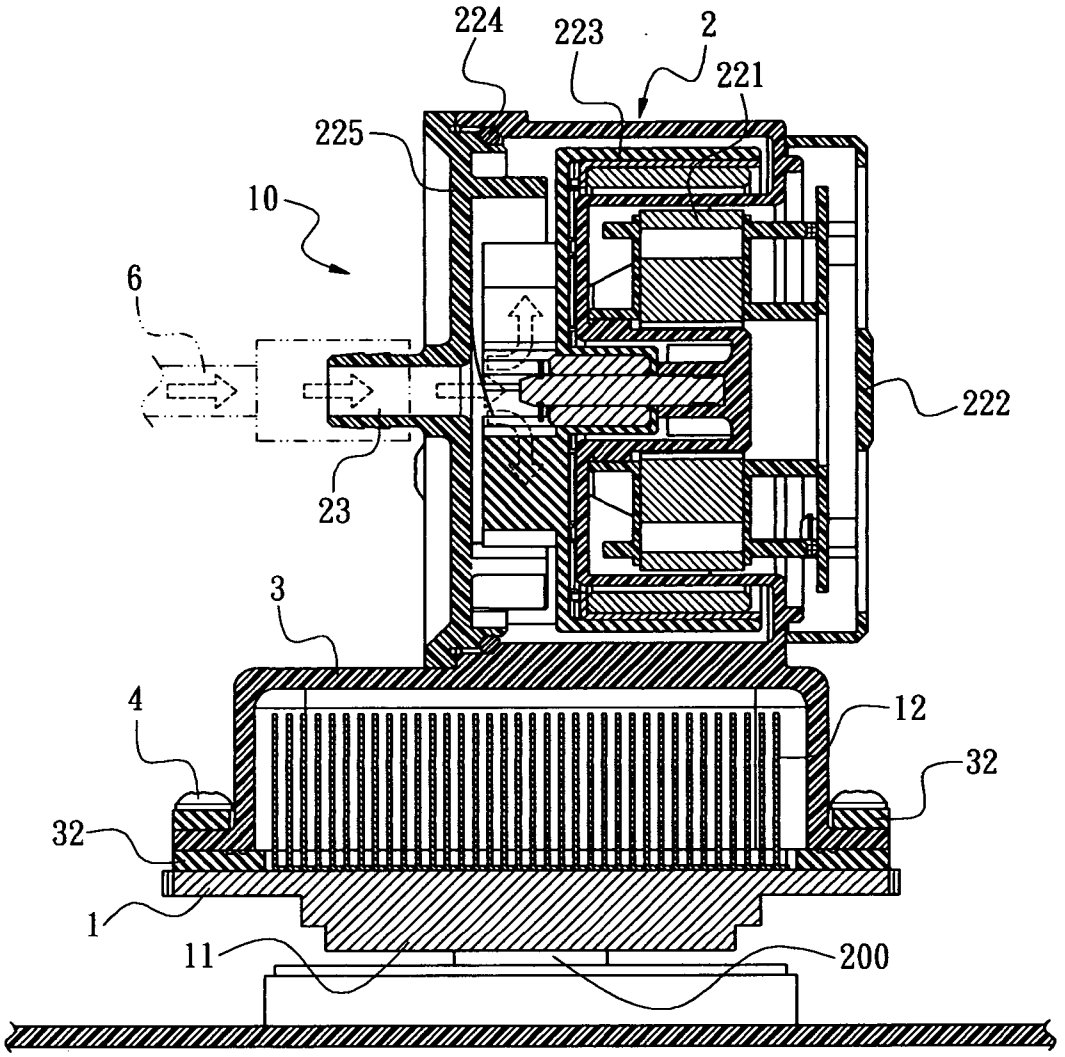

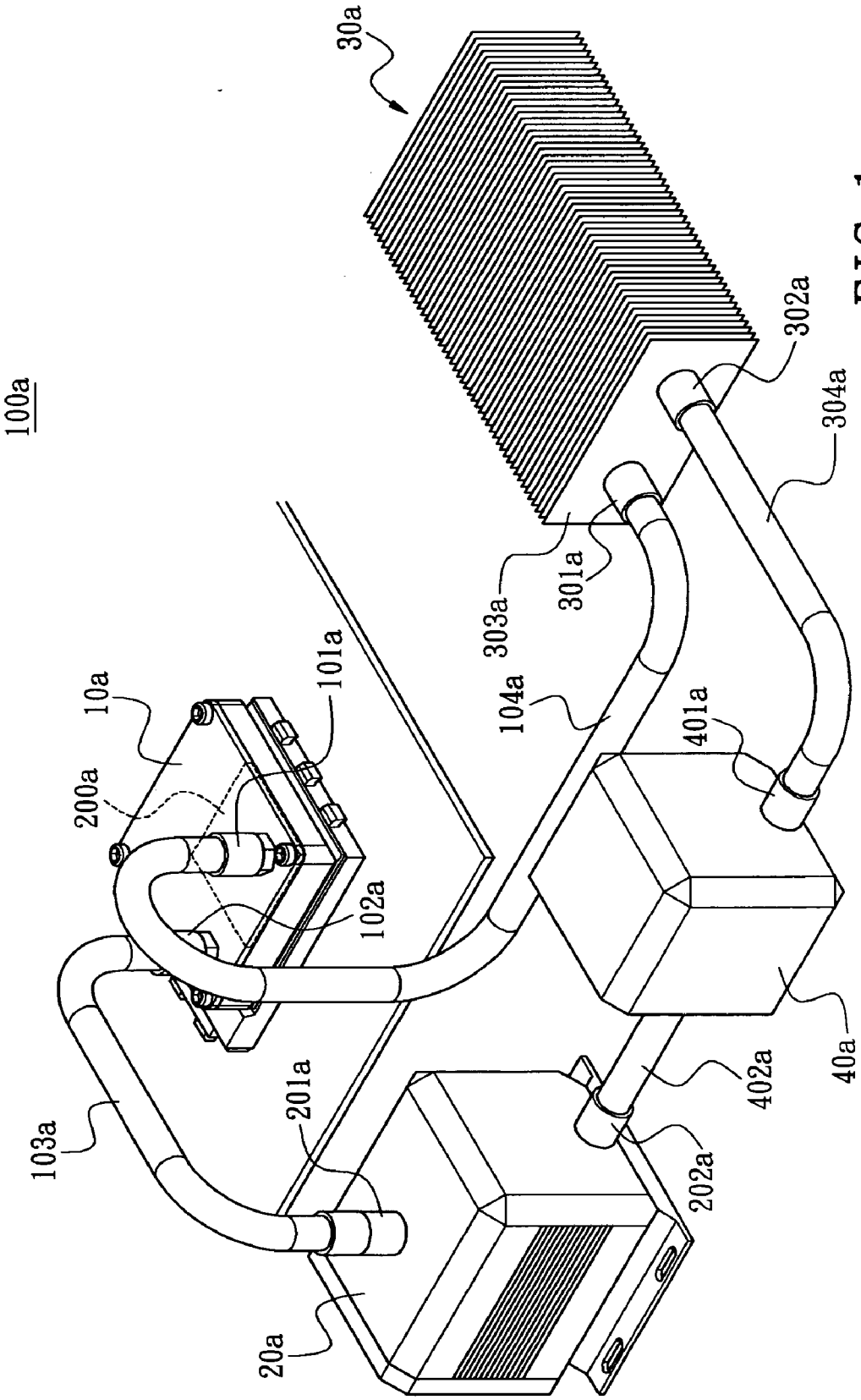

FIG. 1
PRIOR ART

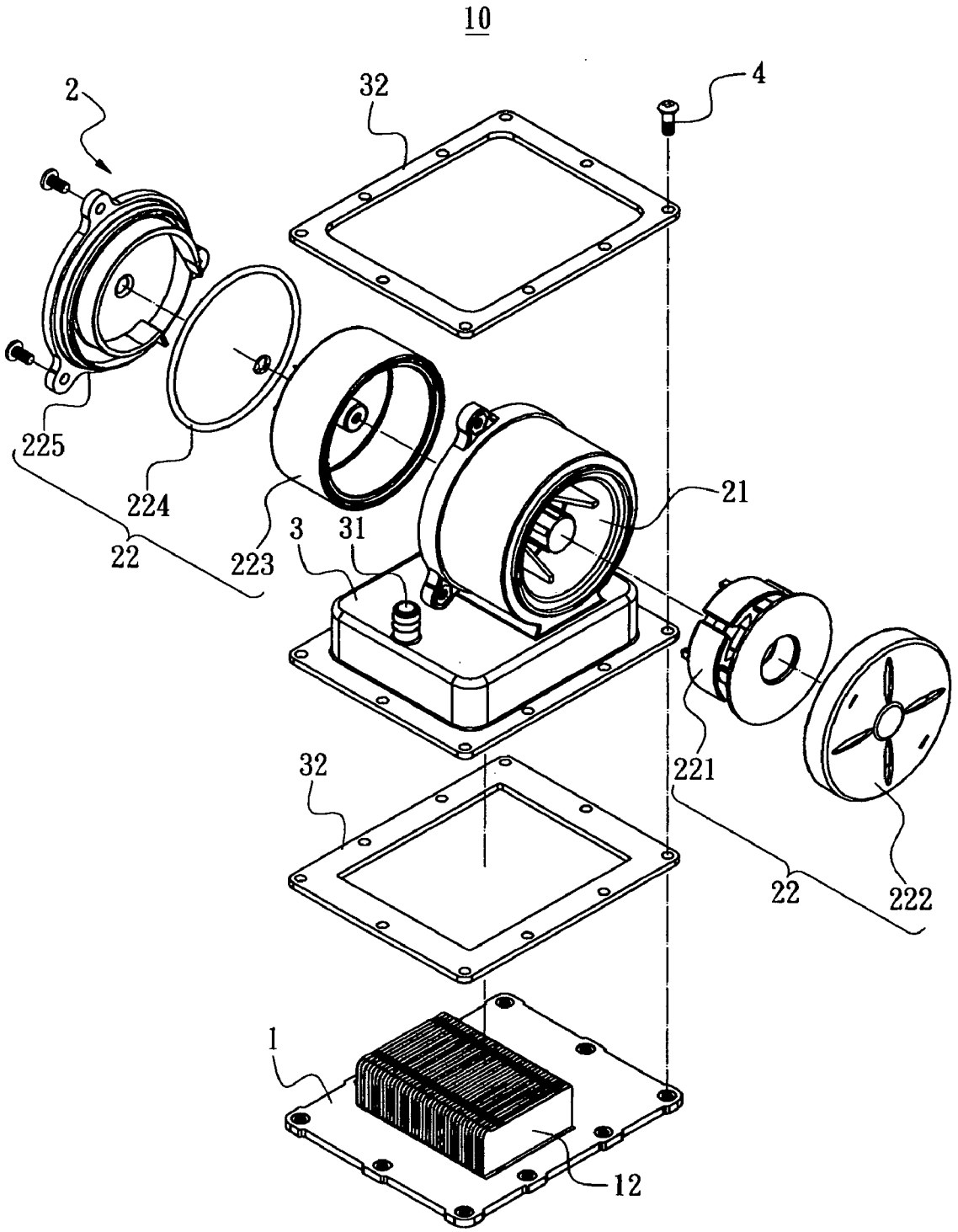

FIG. 2

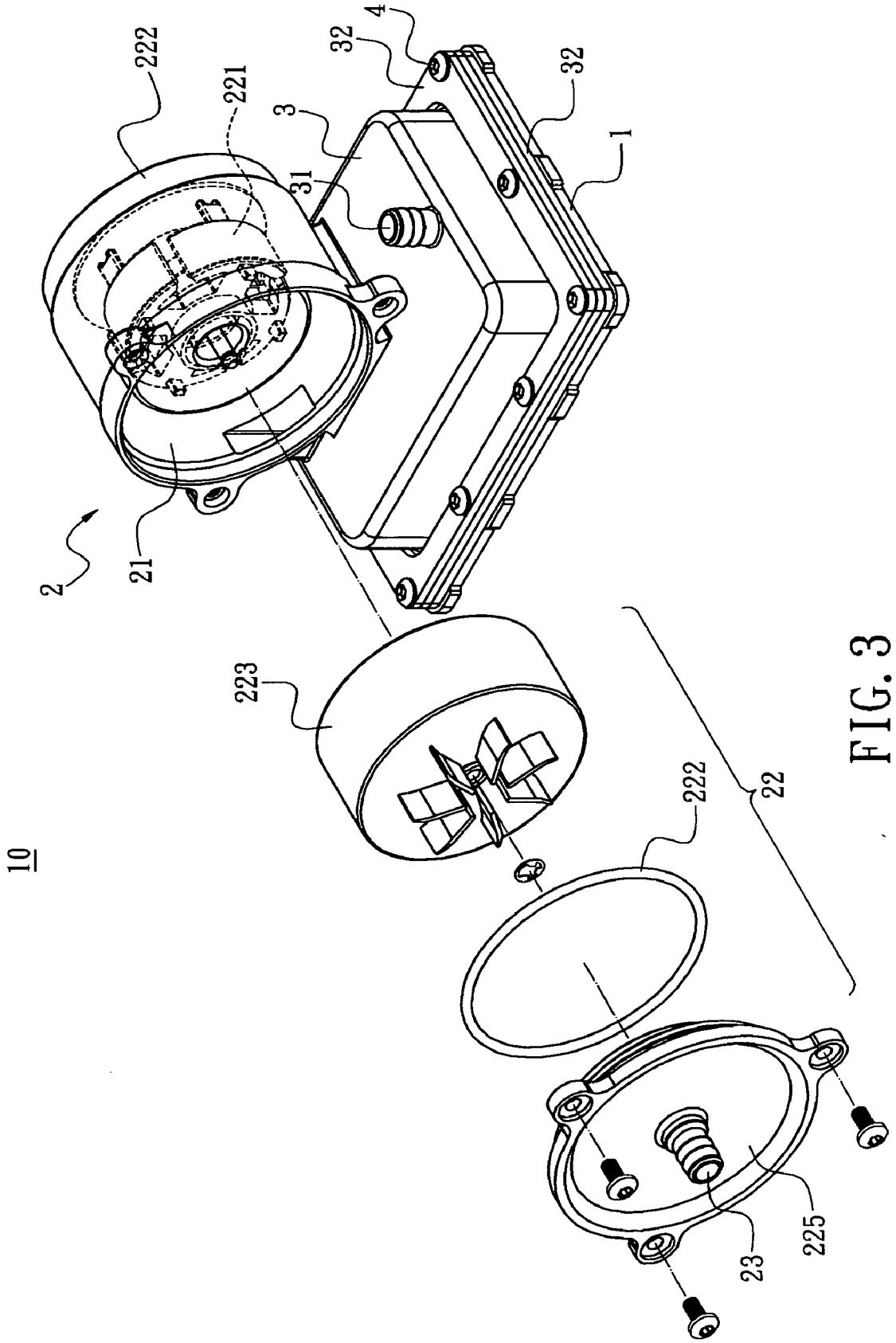

FIG. 3

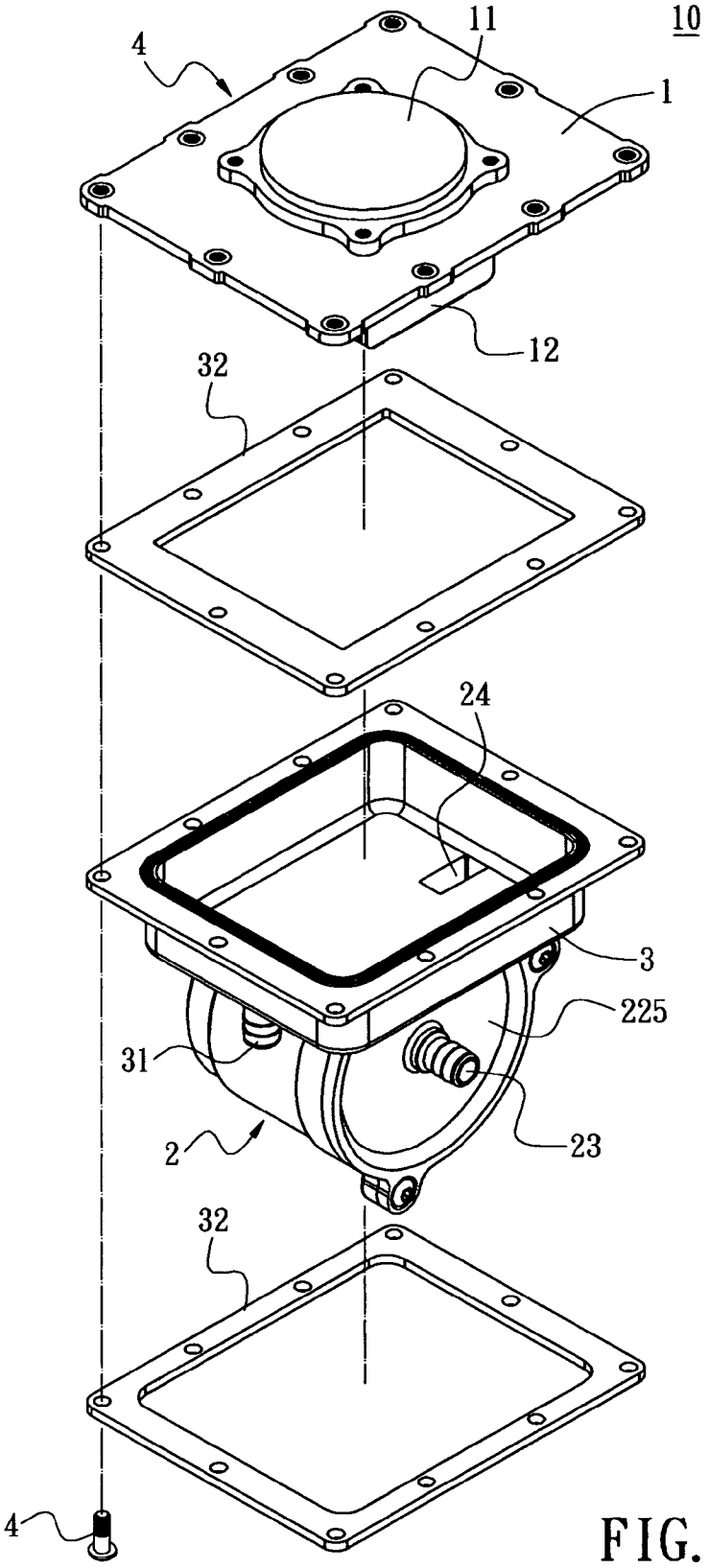

FIG. 4

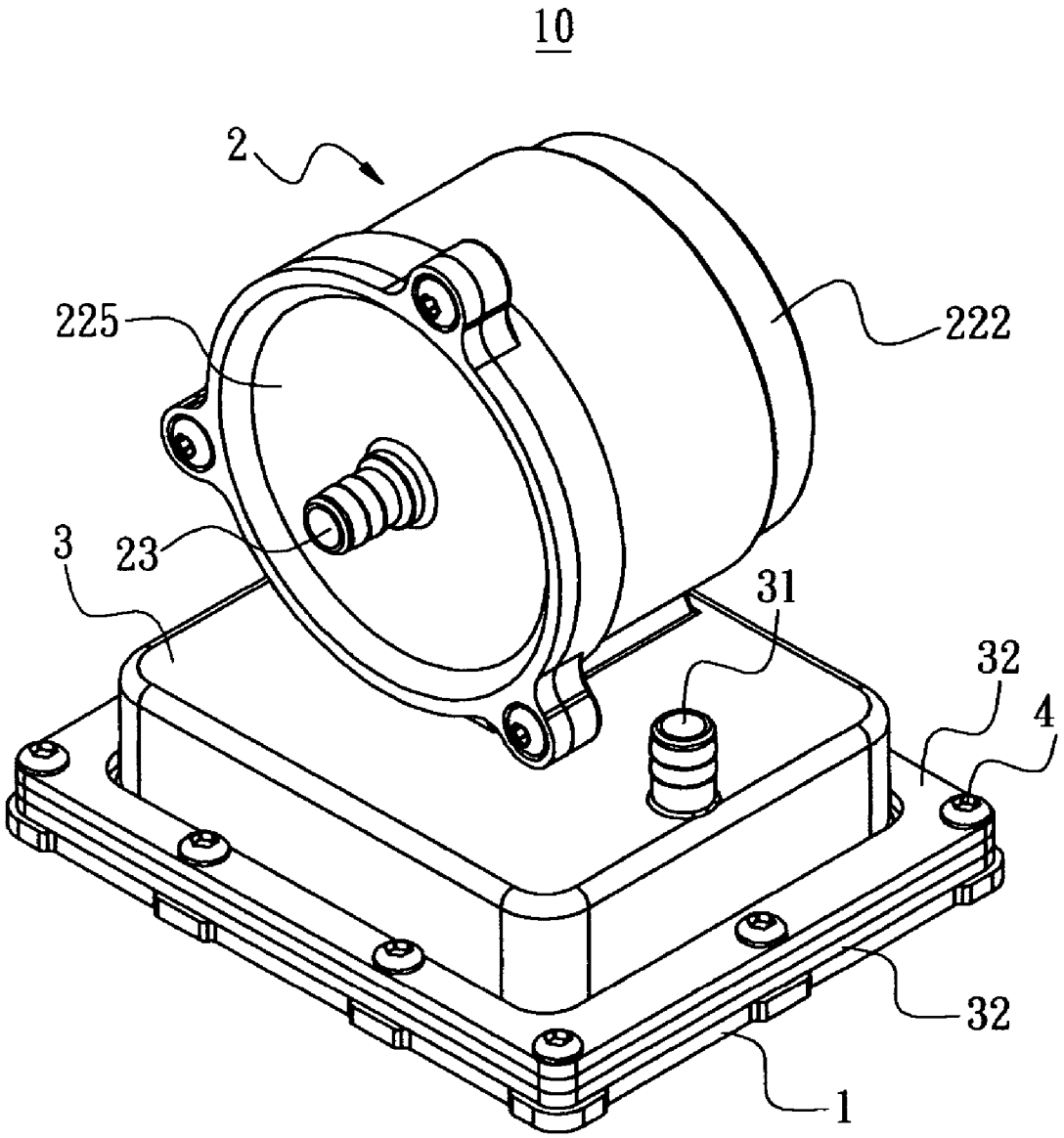

FIG. 5

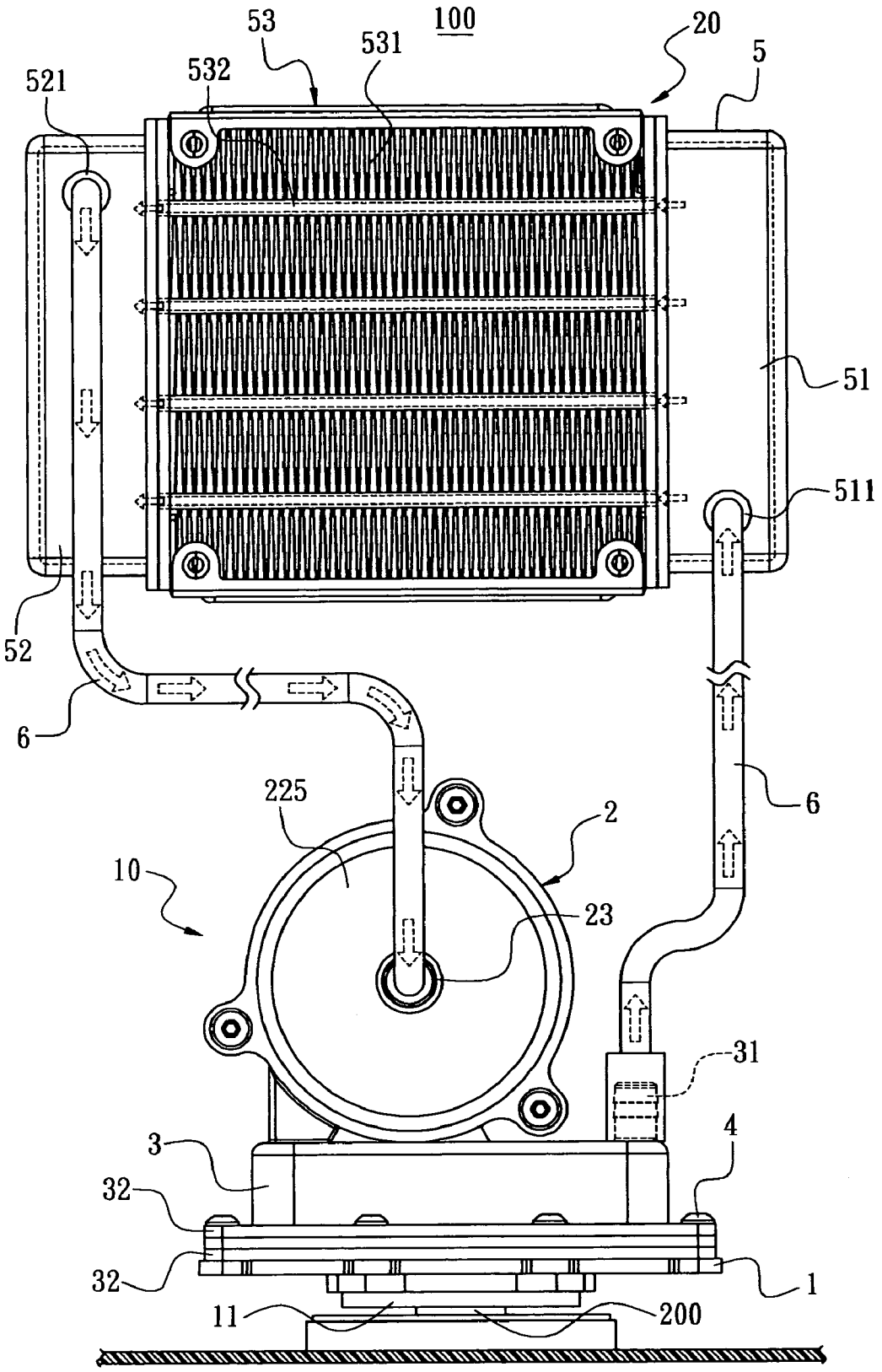

FIG. 6

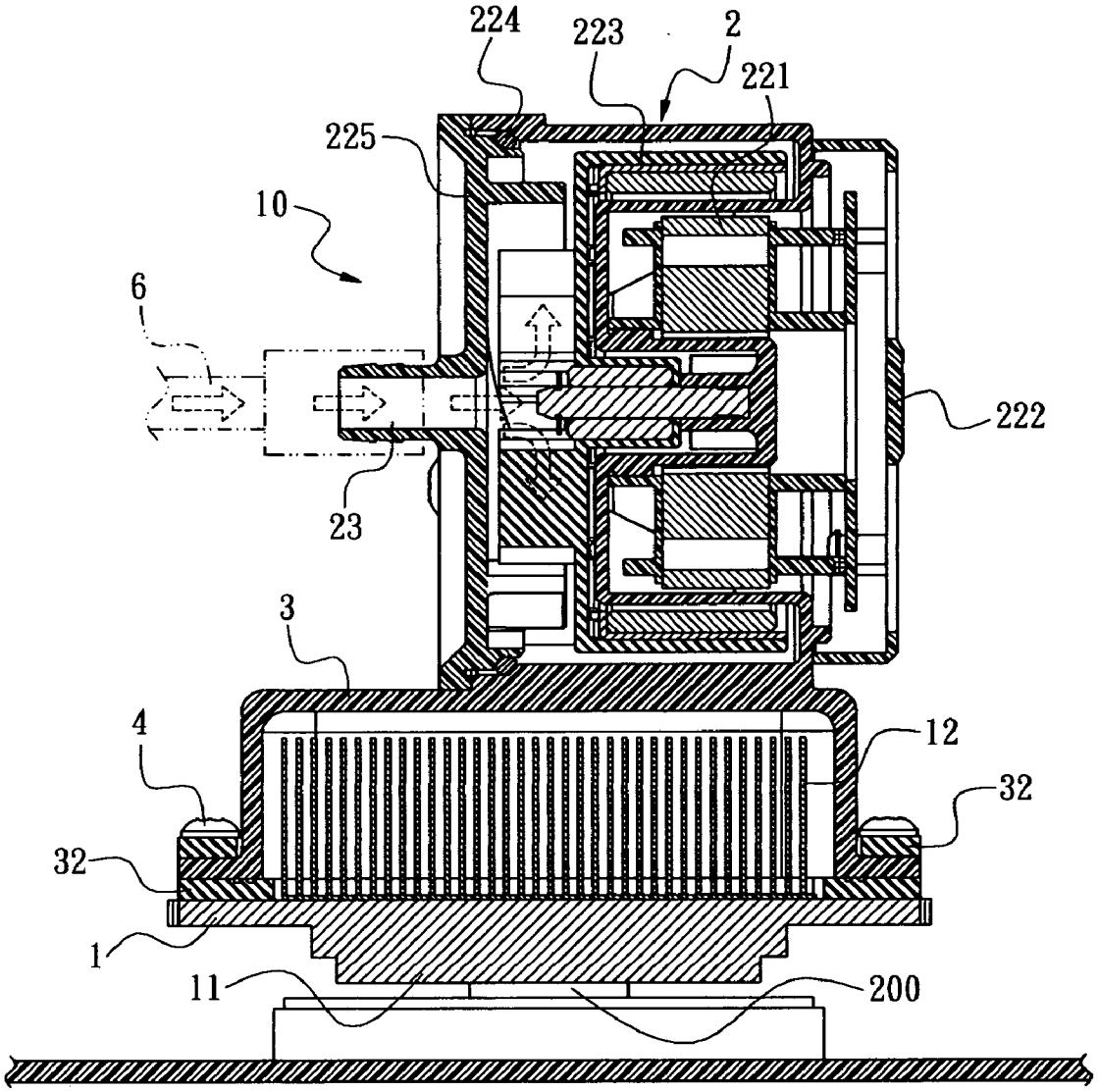

FIG. 7

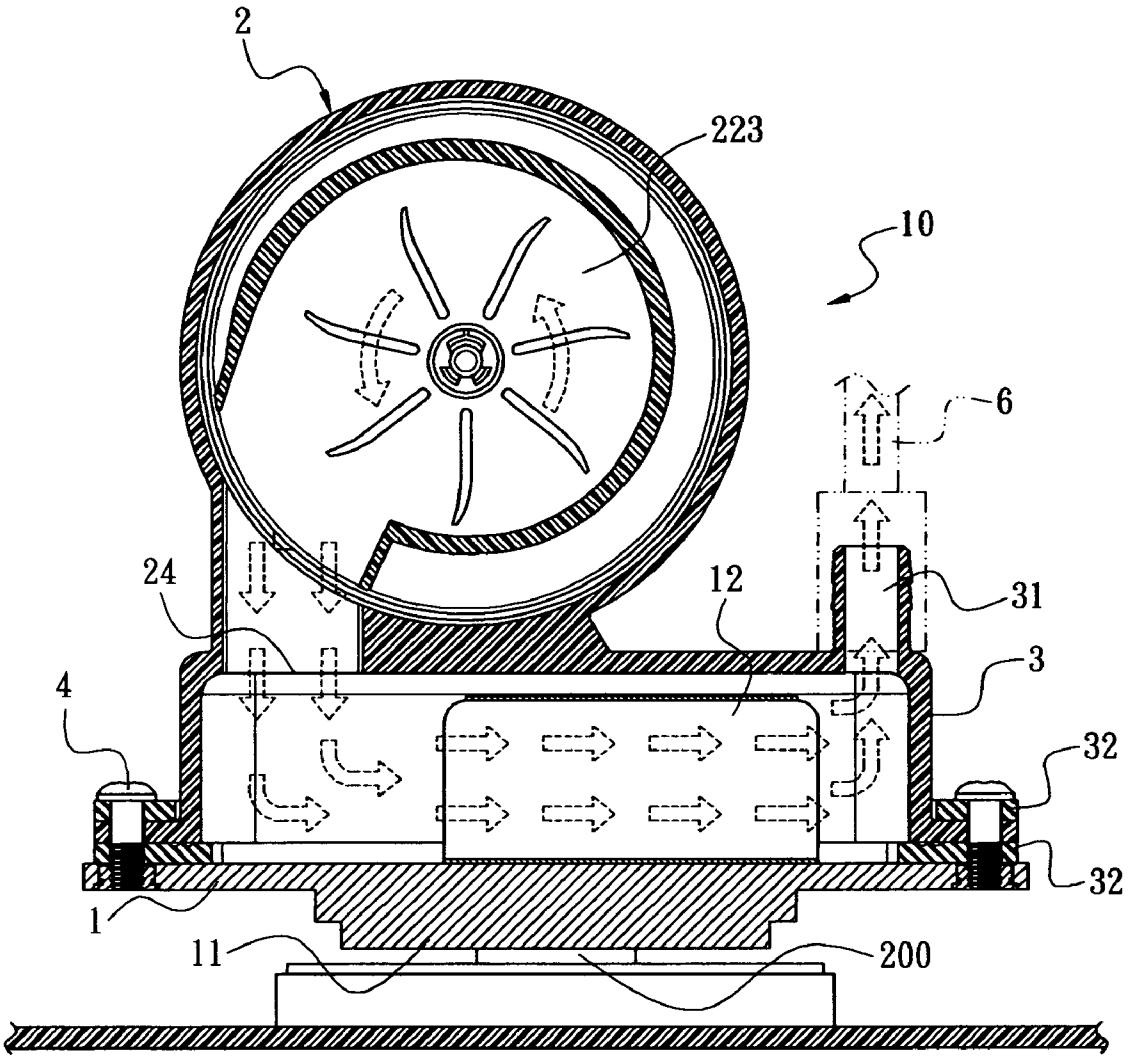

FIG. 8

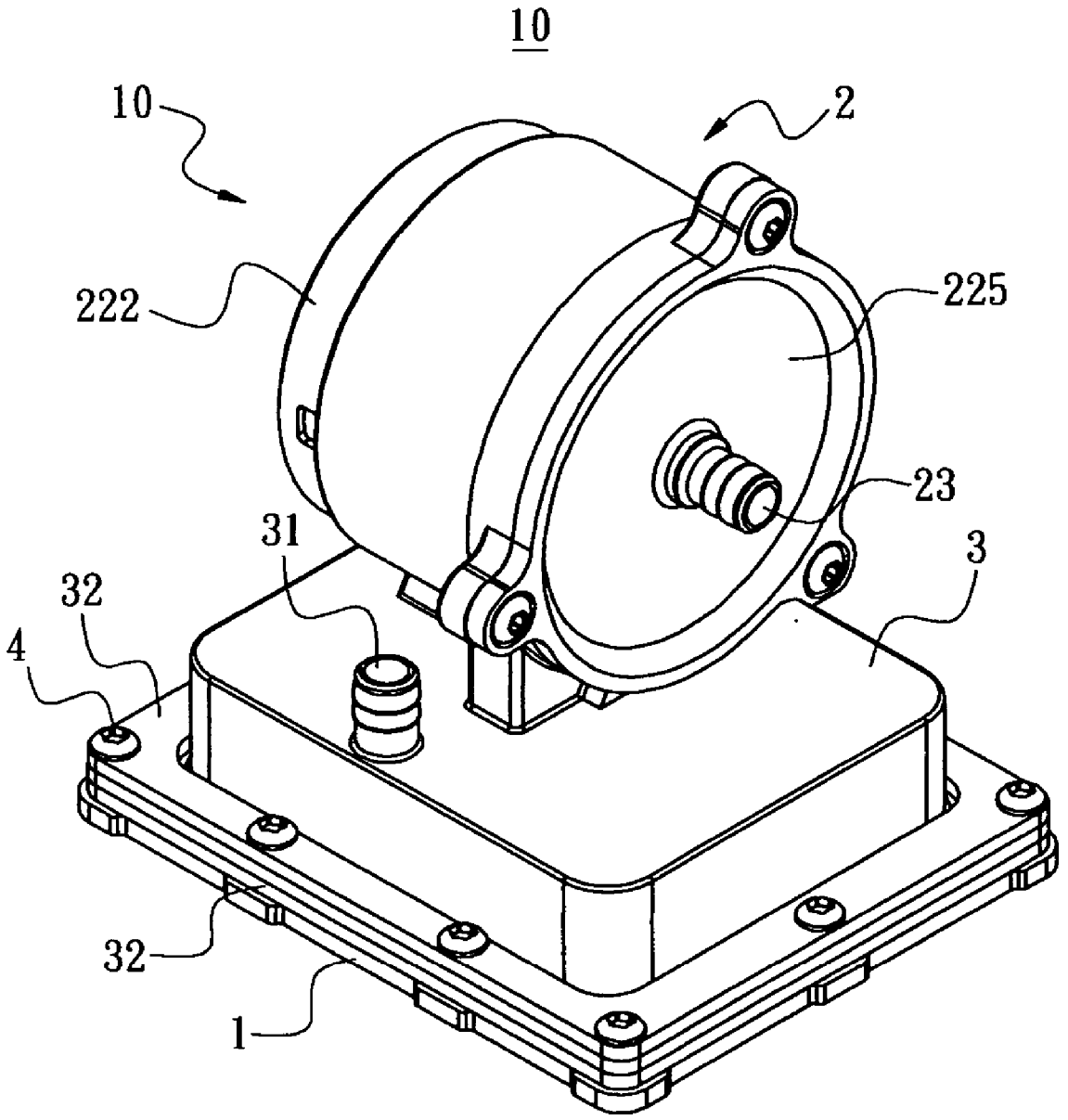

FIG. 9

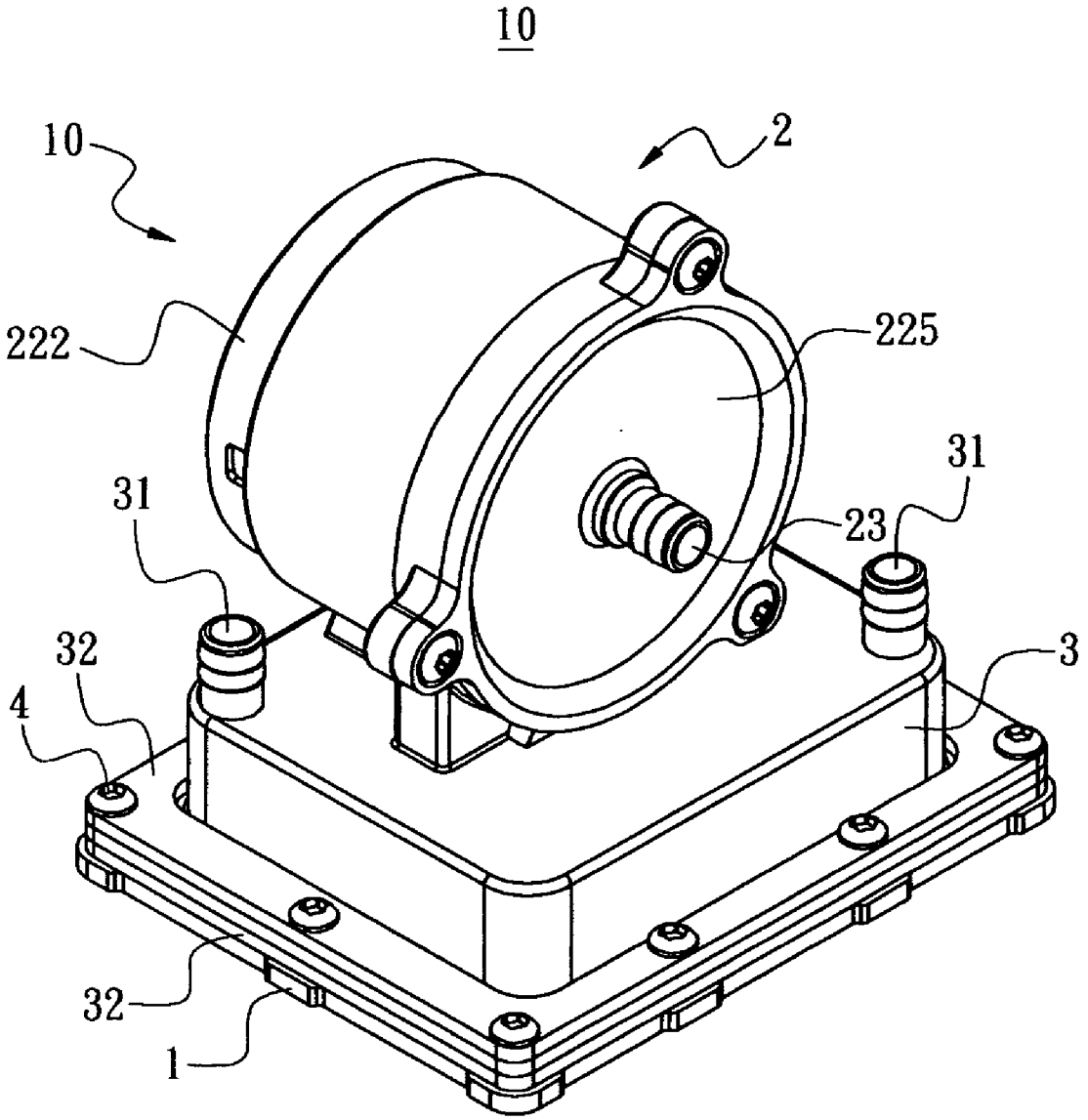

FIG. 10

COOLING PLATE MODULE

BACKGROUND OF THE INVENTION

[0001] 1. Field of the Invention

[0002] The present invention relates to a cooling plate module, and more particularly to a cooling plate module used for heat emitting device such as a CPU.

[0003] 2. Description of Prior Art

[0004] The computers are developed with more powerful function and computation speed. Beside performance issue, the product appearance, the construction and motherboard connection ways are also under extensive exploited. As downsize of form factor and increasing of processing speed, the heat dissipation for central processing unit (CPU) is also an important issue to solve.

[0005] **FIG. 1** shows a perspective view of a prior art liquid-cooling heat dissipation system **100***a*. As shown in this figure, the liquid-cooling heat dissipation system **100***a* comprises a heat dissipation stage **10***a*, a water outlet **101***a* and a water inlet **102***a* on both ends of the heat dissipation system stage **10***a*, respectively, a duct **103***a* connected between the water inlet **102***a* and a water outlet **201***a* of a water pump **20***a*, a duct **104***a* connected between the water outlet **101***a* and a water inlet **301***a* of a cooling stage **30***a*, which is composed of a plurality of heat-dissipating fins **303***a*. The cooling stage **30***a* comprises a water outlet **302***a* connected to a water inlet **401***a* of a water tank **40***a* through a duct **402***a*. The water tank **40***a* comprises a water outlet connected to the water inlet **202***a* of the water pump **20***a*, thus forming the liquid-cooling heat dissipation system **100***a*. During operation, the water pump **20***a* conveys cool water to the heat dissipation stage **10***a* for heat exchanging into hot water. Afterward, hot water flows to the cooling stage **30***a* through the duct **104***a* for heat exchanging into cool water there and cool water flows back to the water tank **40***a* through the duct **304***a*. The above operations are repeated for cyclic heat exchange.

[0006] However, above-described prior art liquid-cooling heat dissipation system **100***a* is composed of separate heat dissipation stage **10***a*, water pump **20***a*, cooling stage **30***a* and water tank **40***a* and ducts **103***a*, **104***a*, **304***a* and **402***a* interconnecting between above devices. The liquid-cooling heat dissipation system **100***a* thus formed is bulky and hard to assemble. This is adverse to the compact trend of computer.

SUMMARY OF THE INVENTION

[0007] The present invention provides a cooling plate module wherein the cooling plate is integrally formed with the liquid driving module such that the layout of the cooling plate module can be minimized to reduce space.

[0008] The present invention further provides a cooling plate module, wherein there is no duct connecting between the cooling plate and the liquid driving module, the stagnant problem caused by pressure difference can be prevented and the cool liquid can directly flush the heat-dissipating plates for enhancing heat dissipation efficiency.

[0009] According to one aspect of the present invention, the cooling plate module is applied to a liquid cooling cyclic mechanism and comprises a cooling plate and a liquid driving module. The liquid driving module includes an accommodation chamber and a liquid driving unit used to driving cooling liquid. The liquid driving module includes a liquid inlet communicated to the accommodation chamber and a first liquid outlet is communicated to the bottom of the accommodation chamber. A cap encloses the first liquid outlet and a second liquid outlet is defined on the cap. The cooling plate is assembled with the cap to define a closed space therein and the first liquid outlet is corresponding to the heat-dissipating plates.

[0010] According to another aspect of the present invention, the cooling plate module is communicated with the water tank module through ducts. The water tank module comprises a box with a liquid entrance region and a liquid exit region provided on both sides of the water tank, respectively. The box comprises a cooling stage at center thereof and composed of a plurality of stacked heat-dissipating fins arranged in rows. Runners are defined between rows of the heat-dissipating fins; both ends of the runner are communicated with the liquid entrance region and the liquid exit region. When the hot liquid in the liquid entrance region flows to the liquid exit region through the runners, the hot liquid is first heat exchanged with the heat-dissipating fins into cool liquid and then the cool liquid flows to the liquid exit region.

BRIEF DESCRIPTION OF DRAWING

[0011] The features of the invention believed to be novel are set forth with particularity in the appended claims. The invention itself however may be best understood by reference to the following detailed description of the invention, which describes certain exemplary embodiments of the invention, taken in conjunction with the accompanying drawings in which:

[0012] **FIG. 1** shows a perspective view of a prior art liquid-cooling heat dissipation system.

[0013] **FIG. 2** shows an exploded view of the cooling plate module according to the present invention.

[0014] **FIG. 3** shows another exploded view of the cooling plate module according to the present invention.

[0015] **FIG. 4** shows an exploded view of the cooling plate before assembling to the box.

[0016] **FIG. 5** shows a perspective view of the cooling plate module according to the present invention.

[0017] **FIG. 6** shows a sectional view of the liquid cooling cyclic mechanism according to the present invention.

[0018] **FIG. 7** shows a sectional view of the cooling plate module according to the present invention.

[0019] **FIG. 8** shows another sectional view of the cooling plate module according to the present invention.

[0020] **FIG. 9** shows another preferred embodiment of the present invention.

[0021] **FIG. 10** shows still another preferred embodiment of the present invention.

DETAILED DESCRIPTION OF THE INVENTION

[0022] With reference to **FIGS. 2 and 6**, the cooling plate module **10** according to the present invention is applied to a

liquid cooling cyclic mechanism **100**, which is used for the heat dissipation of a CPU **200** and composed of the cooling plate module **10** and a water tank module **20** connected with the cooling plate module **10** through ducts. The cooling plate module **10** comprises a cooling plate **1** and a liquid driving module **2**. The cooling plate **1** comprises a heat absorbing face **11** on bottom thereof and being in contact with a heat source. A plurality of heat-dissipating plates **12** are formed on top face of the cooling plate **1** and can be arranged in longitudinal or transverse manner. A runner is defined between the plurality of heat-dissipating plates **12** and forms a closed loop.

[**0023**] With reference to **FIGS. 2, 3** and **4**, the liquid driving module **2** comprises an accommodation chamber **21** and a liquid driving unit **22** located in the accommodation chamber **21** and used to driving the cool liquid. The liquid driving unit **22** comprises a coil stage **221**, an upper cover **222**, an impeller stage **223**, a sealing washer **224** and a lower cover **225**. The lower cover **225** comprises a liquid inlet **23** communicated with the accommodation chamber **21**. A first liquid outlet **24** is communicated to the bottom of the accommodation chamber **21** and is enclosed by a cap **3**. A second liquid outlet **31** is defined on the cap **3**. The cooling plate **1** is assembled with the cap **3** to define a closed space therein and the first liquid outlet **24** is corresponding to the heat-dissipating plates **12**. In the present invention, the liquid driving module **2** can be reciprocating pump, centrifugal pump or axial-flow pump.

[**0024**] To assemble the cooling plate module **10**, the coil stage **221**, the upper cover **222**, the impeller stage **223**, the sealing washer **224** and the lower cover **225** are assembled to the accommodation chamber **21** in turn. Thereafter, sealing pads **32** are provided between the cap **3** and the cooling plate **1** and provided atop the cap **3**, and are retained by bolt units **4**. The cooling plate **1** is fixed to bottom of the cap **3** and the heat-dissipating plates **12** are located in the cap **3** and corresponding to the first liquid outlet **24**. The thus assembled cooling plate module **10** is shown in **FIG. 5**.

[**0025**] As shown in **FIG. 6**, the water tank **20** of the liquid cooling cyclic mechanism **100** comprises a box **5** with a liquid entrance region **51** and a liquid exit region **52** provided on both sides of the water tank **20**, respectively. The box **5** comprises a cooling stage **53** at center thereof and composed of a plurality of stacked heat-dissipating fins **531** arranged in rows. Runners **532** are defined between rows of the heat-dissipating fins **531**; both ends of the runner **532** are communicated with the liquid entrance region **51** and the liquid exit region **52**. When the hot liquid in the liquid entrance region **51** flows to the liquid exit region **52** through the runners **532**, the hot liquid is first heat exchanged with the heat-dissipating fins **531** into cool liquid and then the cool liquid flows to the liquid exit region **52**.

[**0026**] In the present invention, during the assembling of the liquid cooling cyclic mechanism **100**, the liquid inlet **23** of the cooling plate module **10** is communicated to the liquid outlet **521** of the liquid exit region **52** of the water tank **20** through duct **6**. Moreover, the second liquid outlet **31** of the cooling plate module **10** is communicated to the liquid inlet **511** of the liquid entrance region **51** of the water tank **20** through duct **6**, thus forming the liquid cooling cyclic mechanism **100** with continuous cycles. Thereafter, the liquid cooling cyclic mechanism **100** is assembled to the CPU **200** with the heat absorbing face **11** being in contact with the CPU **200** for heat dissipating the CPU **200**.

[**0027**] With reference to **FIGS. 7 and 8**, during operation of the present invention, the cool liquid in the water tank **20** is conveyed to the accommodation chamber **21** through the duct **6** and the liquid inlet **23** of the cooling plate module **10** and driven by the liquid driving unit **22**. The cool liquid then flows to the cap **3** through the first liquid outlet **24** for heat dissipating the heat-dissipating plates **12** in the cap **3**. More particularly, the cool liquid is heat exchanged with the heat-dissipating plates **12** into hot liquid. The hot liquid then flows to the liquid entrance region **51** of the water tank **20** through the second liquid outlet **31** of the cooling plate module **10** and another duct **6**.

[**0028**] The hot liquid flowing into the liquid entrance region **51** of the water tank **20** will be conveyed to each runner **532** and heat exchanged with the heat-dissipating fins **531** into cool liquid. The cool liquid flows to the liquid exit region **52** of the water tank **20** and then flows to the cooling plate module **10** through the duct **6** connected to the liquid exit region **52**, thus performing cyclic heat exchange.

[**0029**] **FIG. 9** shows another preferred embodiment of the present invention, the liquid driving module **2** is integrally formed at center of the cap **3** such that the cool liquid flowing into the accommodation chamber **21** will directly flow out of the first liquid outlet **24** and flush the heat-dissipating plates **12** to heat dissipate the heat-dissipating plates **12** with enhanced efficiency.

[**0030**] **FIG. 10** shows still another preferred embodiment of the present invention, the cap **3** comprises two second liquid outlets **31** thereon. In case of only one water tank **20**, one liquid outlet **31** is connected to the liquid inlet **511** of the liquid entrance region **51** of the water tank **20** through a duct **6**. The liquid outlet **521** of the liquid exit region **52** of the water tank **20** is connected to the liquid inlet **23** of the cooling plate module **10** through another duct **6**. When two water tanks **20** are to be used, the two second liquid outlets **31** are connected to the two water tanks **20** through respective duct **6**.

[**0031**] In the present invention, the cooling plate **1** is integrally formed with the liquid driving module **2** such that the layout of the cooling plate module **10** can be minimized to reduce space. Moreover, there is no duct connecting between the cooling plate **1** and the liquid driving module **2**, the stagnant problem caused by pressure difference can be prevented and the cool liquid can directly flush the heat-dissipating plates **12** for enhancing heat dissipation efficiency.

[**0032**] Although the present invention has been described with reference to the preferred embodiment thereof, it will be understood that the invention is not limited to the details thereof. Various substitutions and modifications have suggested in the foregoing description, and other will occur to those of ordinary skill in the art. Therefore, all such substitutions and modifications are intended to be embraced within the scope of the invention as defined in the appended claims.

What is claimed is:

1. A cooling plate module used in a liquid cooling cyclic mechanism for removing heat from a heat source, comprising

a cooling plate comprising a heat absorbing face on bottom thereof and being in contact with a heat source, and a plurality of heat-dissipating plates on top face of the cooling plate;

a liquid driving module comprising an accommodation chamber and a liquid driving unit used to driving a cooling liquid, the liquid driving module comprising a liquid inlet communicated to the accommodation chamber and a first liquid outlet communicated to a bottom of the accommodation chamber; a cap enclosing the first liquid outlet and a second liquid outlet being defined on the cap;

wherein the cooling plate is assembled with the cap to define a closed space therein and the first liquid outlet is corresponding to the heat-dissipating plates.

2. The cooling plate module as in claim 1, wherein the heat-dissipating plates are arranged in one of longitudinal manner and transverse manner.

3. The cooling plate module as in claim 1, wherein the heat-dissipating plates are such arranged that a runner is defined between the plurality of heat-dissipating plates and forms a closed loop.

4. The cooling plate module as in claim 1, wherein the liquid driving module is a reciprocating pump.

5. The cooling plate module as in claim 1, wherein the liquid driving module is a centrifugal pump.

6. The cooling plate module as in claim 1, wherein the liquid driving module is an axial-flow pump.

7. The cooling plate module as in claim 1, wherein a sealing pad is provided between the cap and the cooling plate.

* * * * *