US 20060185829A1

(19) United States

(12) Patent Application Publication

(10) Pub. No.: US 2006/0185829 A1

(43) Pub. Date: Aug. 24, 2006

Duan et al.

(54) LIQUID-COOLING HEAT DISSIPATION APPARATUS

(75) Inventors: **Qiang-Fei Duan**, Chung-Ho City (CN); **Lieh-Feng Lo**, Chung-Ho City (TW)

Correspondence Address:
HDSL
4331 STEVENS BATTLE LANE
FAIRFAX, VA 22033 (US)

(73) Assignee: **Cooler Master Co., Ltd.**

(21) Appl. No.: **11/060,419**

(22) Filed: **Feb. 18, 2005**

Publication Classification

(51) **Int. Cl.**
F28D 15/00 (2006.01)

(52) **U.S. Cl.** **165/104.33**

(57) **ABSTRACT**

A liquid-cooling heat dissipation apparatus includes a casing, a first compartment defined in the casing for assembling a liquid driving unit, a cooling plate module on bottom of the casing, a second compartment defined between an inner space of the casing and the cooling plate module and containing a cooling liquid therein. At least one liquid inlet and liquid outlet are defined on the casing and communicated through the second compartment. Therefore, the liquid driving unit and the cooling plate module can be advantageously integrated into the casing while the duct is reduced to achieve compact space. Moreover, the overall structure achieves liquid storing, circulating and heat conveying function.

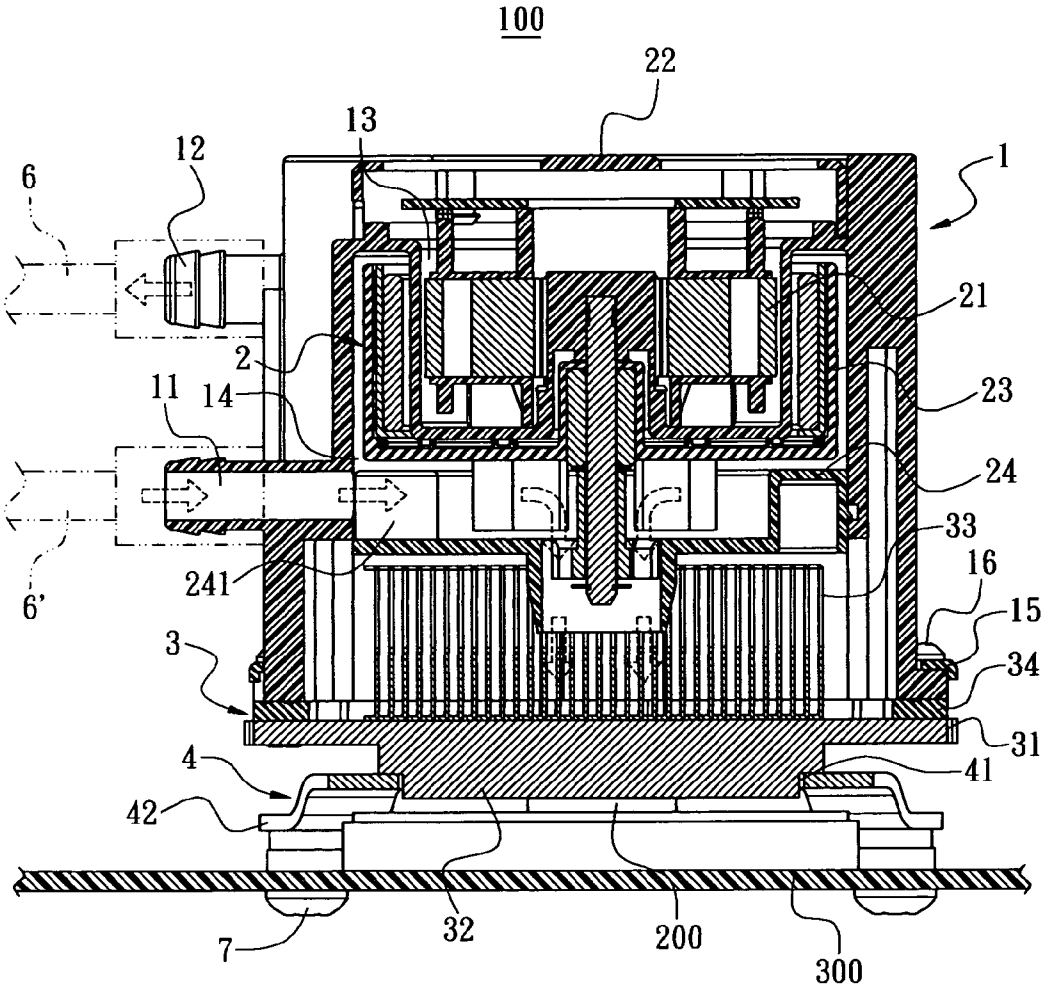

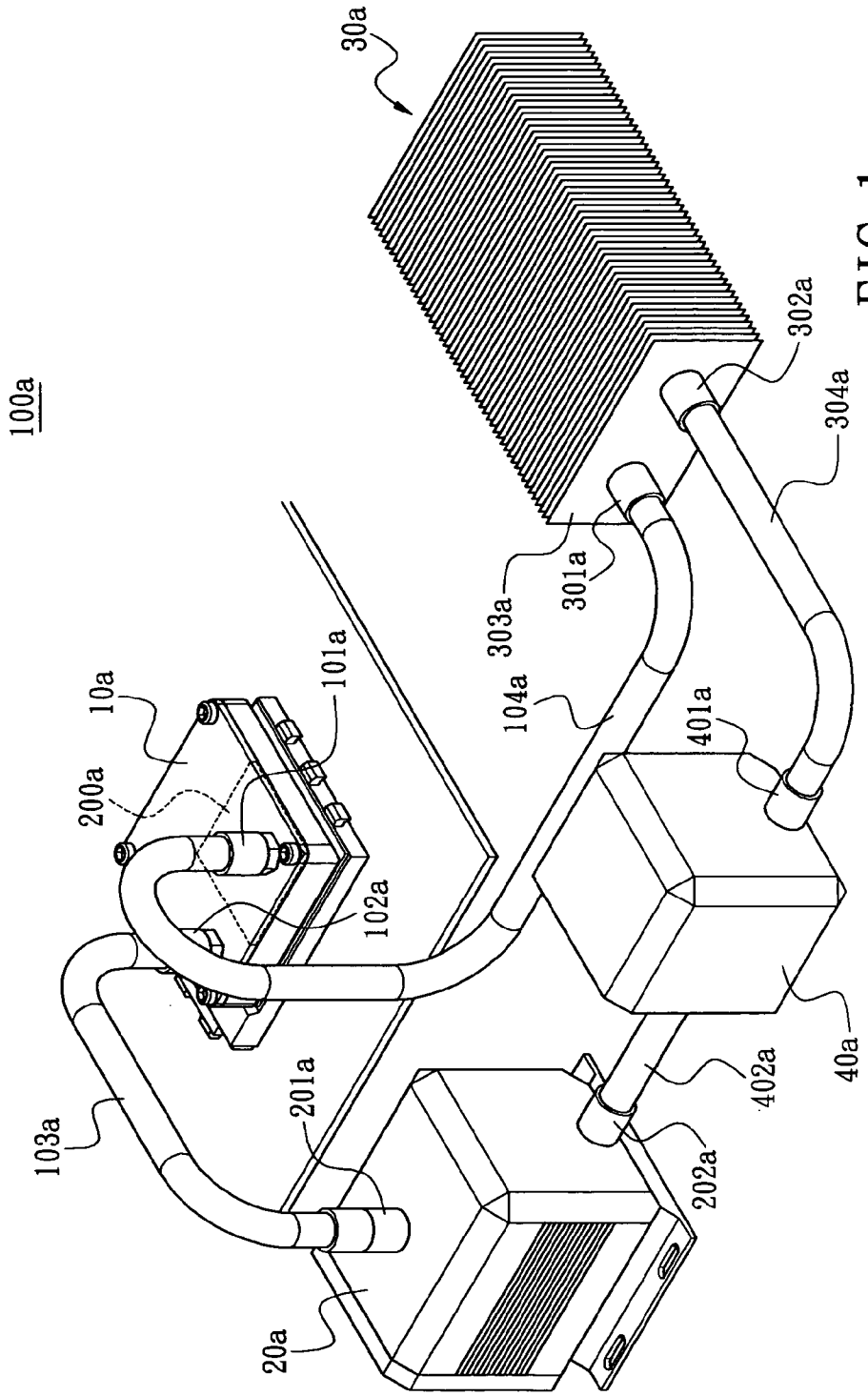

FIG. 1
PRIOR ART

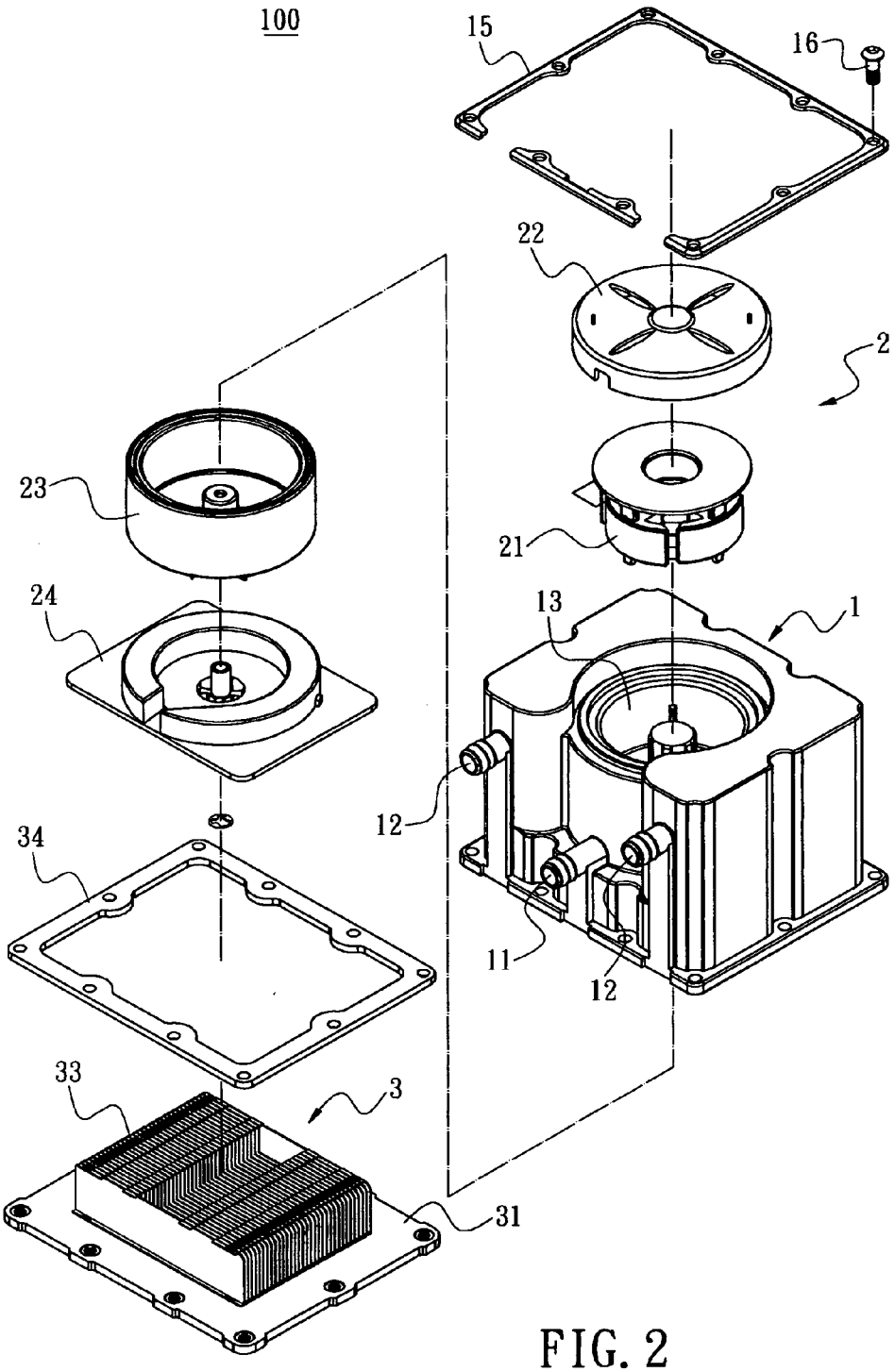

FIG. 2

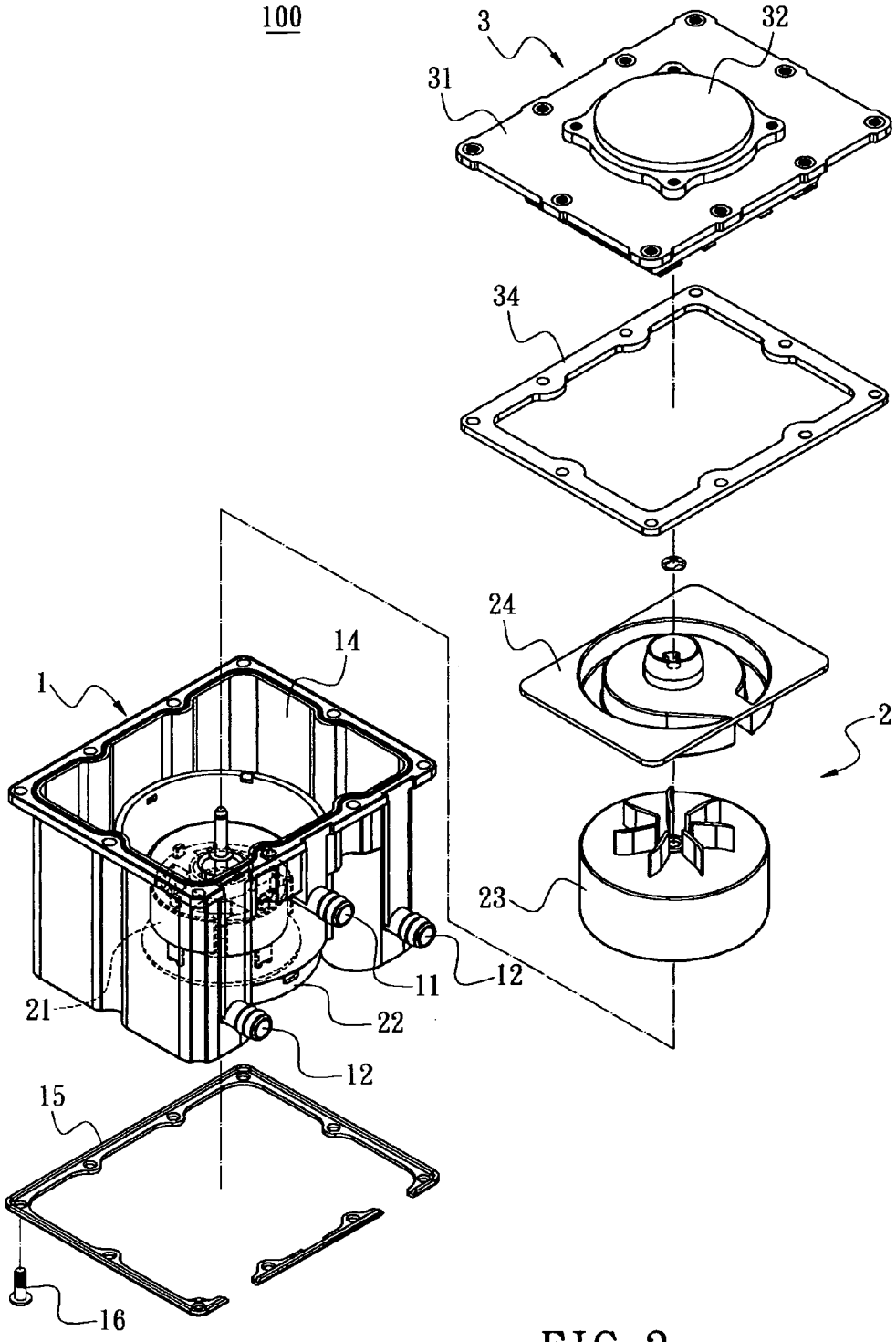

FIG. 3

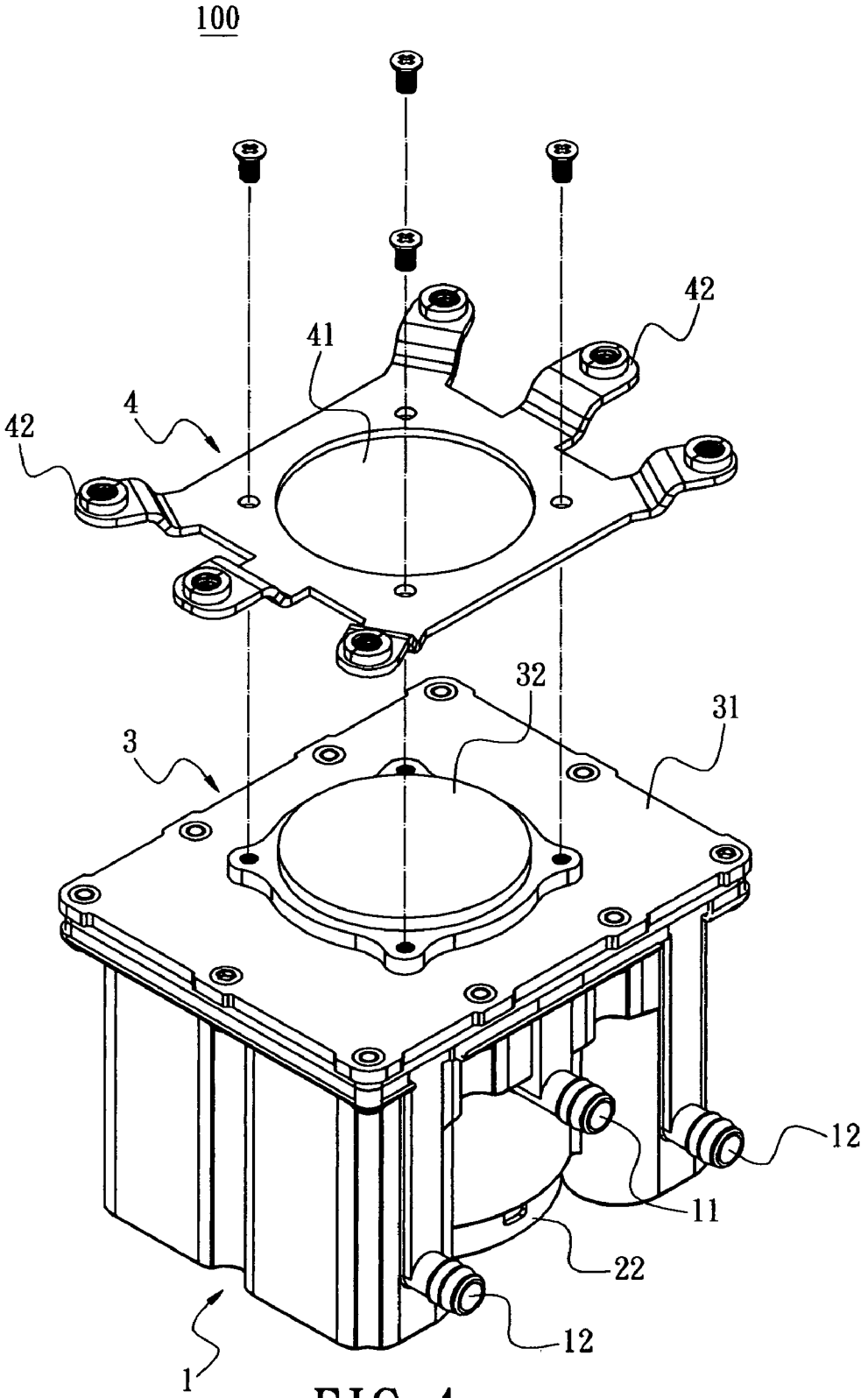

FIG. 4

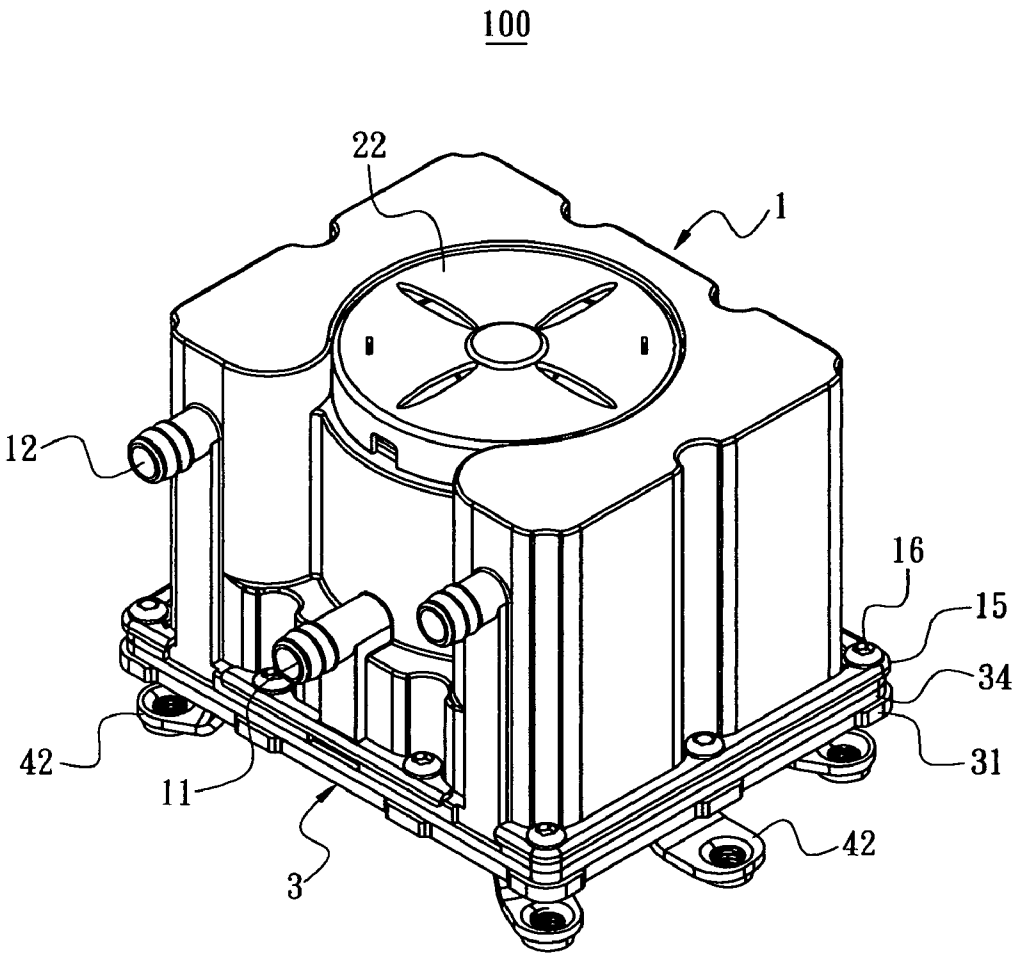

FIG. 5

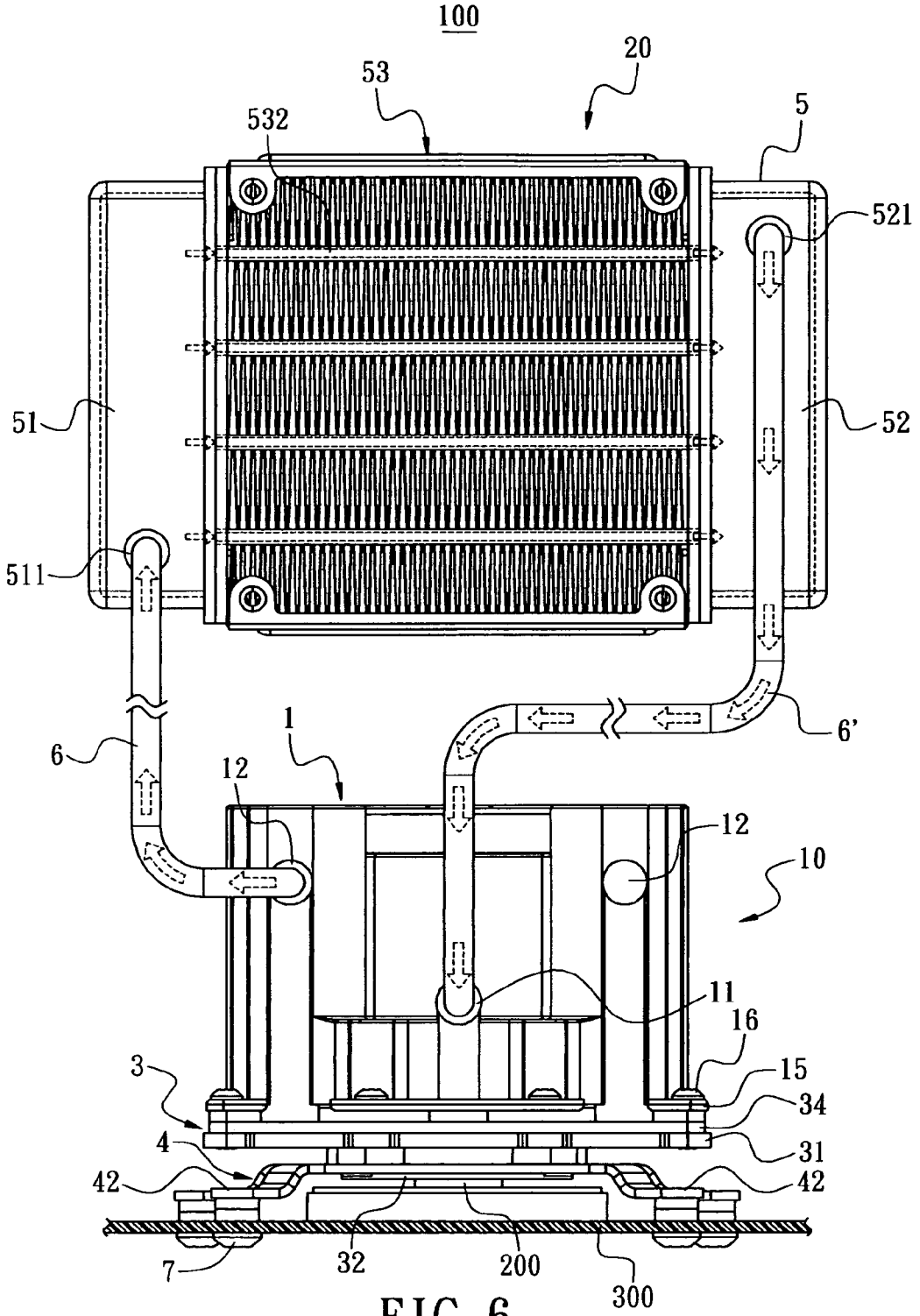
100
20
53
532
5
521
51
52
511
6
6'
1
12
12
10
11
16
3
15
34
4
31
42
42
7
32
200
300

FIG. 6

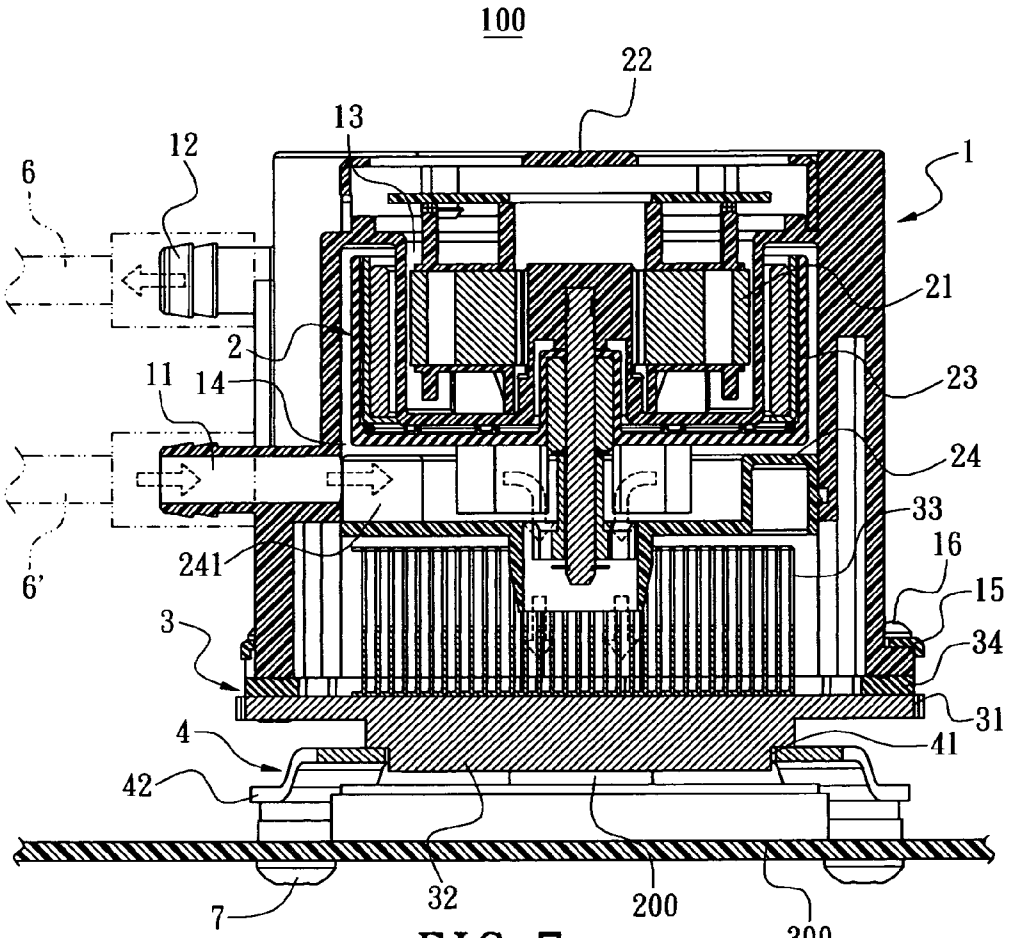
100
22
13
12
6
1
21
2
11
14
23
24
33
241
16
6'
15
3
34
31
4
41
42
7
32
200
300

FIG. 7

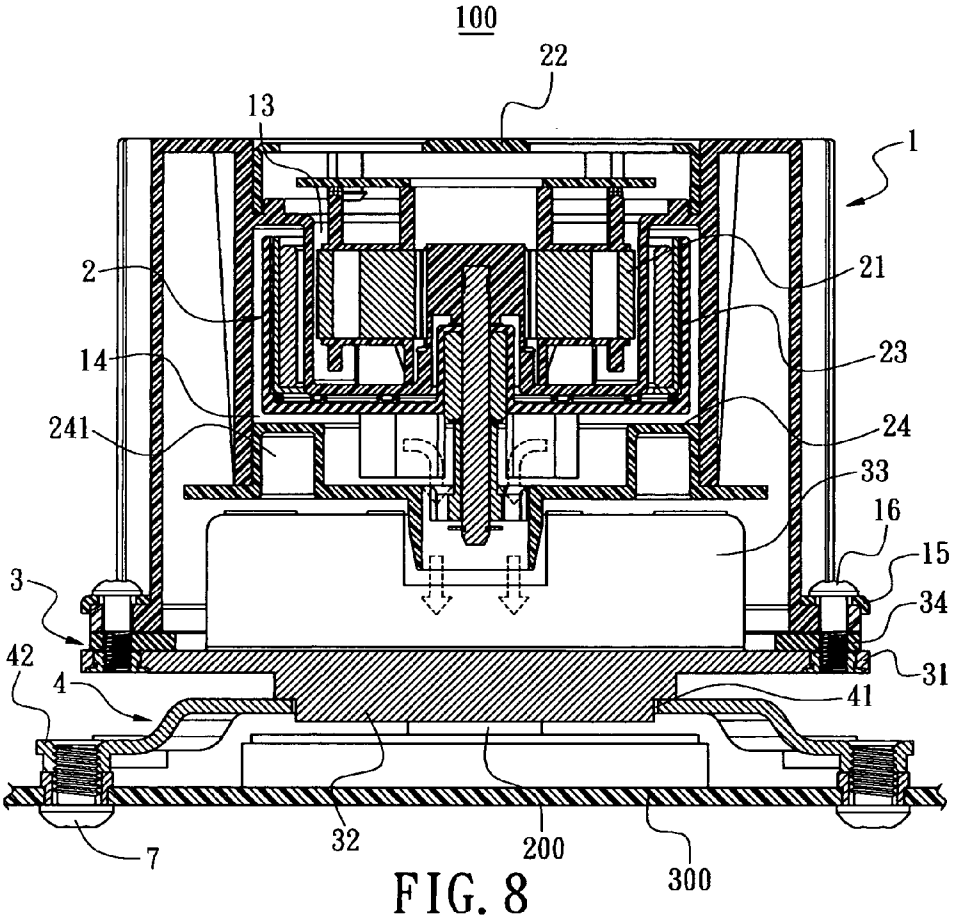

FIG. 8

LIQUID-COOLING HEAT DISSIPATION APPARATUS

BACKGROUND OF THE INVENTION

[0001] 1. Field of the Invention

[0002] The present invention relates to a liquid-cooling heat dissipation apparatus, and more particularly to a liquid-cooling heat dissipation apparatus used for heat emitting device such as a CPU.

[0003] 2. Description of Prior Art

[0004] The computers are developed with more powerful function and computation speed. Beside performance issue, the product appearance, the construction and motherboard connection ways are also under extensive exploited. As downsize of form factor and increasing of processing speed, the heat dissipation for central processing unit (CPU) is also an important issue to solve.

[0005] **FIG. 1** shows a perspective view of a prior art liquid-cooling heat dissipation system **100***a*. As shown in this figure, the liquid-cooling heat dissipation system **100***a* comprises a heat dissipation stage **10***a*, a water outlet **101***a* and a water inlet **102***a* on both ends of the heat dissipation system stage **10***a*, respectively, a duct **103***a* connected between the water inlet **102***a* and a water outlet **201***a* of a water pump **20***a*, a duct **104***a* connected between the water outlet **101***a* and a water inlet **301***a* of a cooling stage **30***a*, which is composed of a plurality of heat-dissipating fins **303***a*. The cooling stage **30***a* comprises a water outlet **302***a* connected to a water inlet **401***a* of a water tank **40***a* through a duct **402***a*. The water tank **40***a* comprises a water outlet connected to the water inlet **202***a* of the water pump **20***a*, thus forming the liquid-cooling heat dissipation system **100***a*. During operation, the water pump **20***a* conveys cool water to the heat dissipation stage **10***a* for heat exchanging into hot water. Afterward, hot water flows to the cooling stage **30***a* through the duct **104***a* for heat exchanging into cool water there and cool water flows back to the water tank **40***a* through the duct **304***a*. The above operations are repeated for cyclic heat exchange.

[0006] However, above-described prior art liquid-cooling heat dissipation system **100***a* is composed of separate heat dissipation stage **10***a*, water pump **20***a*, cooling stage **30***a* and water tank **40***a* and ducts **103***a*, **104***a*, **304***a* and **402***a* interconnecting between above devices. The liquid-cooling heat dissipation system **100***a* thus formed is bulky and hard to assemble. This is adverse to the compact trend of computer.

SUMMARY OF THE INVENTION

[0007] The present invention provides a liquid-cooling heat dissipation apparatus with such mechanical design that the liquid driving unit and the cooling plate module can be advantageously integrated into the casing while the duct is reduced to achieve compact space.

[0008] Moreover, the present invention provides a liquid-cooling heat dissipation apparatus with overall structure achieves liquid storing, circulating and heat conveying function.

[0009] According to one aspect of the present invention, the liquid-cooling heat dissipation apparatus comprises a casing comprising a first compartment, a liquid driving unit placed in the first compartment, a cooling plate module on bottom of the casing, a second compartment defined between an inner space of the casing and the cooling plate module and containing a cooling liquid, at least one liquid inlet and liquid outlet being defined on the casing and communicated through the second compartment. Therefore, the cooling liquid is circulated when the liquid driving unit operates.

[0010] According to another aspect of the present invention, the at least one liquid inlet and liquid outlet are communicated through a plurality of ducts and further communicated with a liquid cooling array through another end of the duct. The liquid cooling array comprises a box, wherein a liquid inlet and a liquid outlet are arranged on both sides of the box, respectively. A plurality of heat-dissipating fins are stacked in the center of the box and arranged in a plurality of rows, wherein runner is defined between two rows of heat-dissipating fins and communicates with the liquid inlet and the liquid outlet. When the hot water in the liquid inlet flows into the liquid outlet through the runner, the hot water is heat exchanged with the heat-dissipating fins into cool water and then the cool water flows to the liquid outlet.

BRIEF DESCRIPTION OF DRAWING

[0011] The features of the invention believed to be novel are set forth with particularity in the appended claims. The invention itself however may be best understood by reference to the following detailed description of the invention, which describes certain exemplary embodiments of the invention, taken in conjunction with the accompanying drawings in which:

[0012] **FIG. 1** shows a perspective view of a prior art liquid-cooling heat dissipation system.

[0013] **FIG. 2** shows an exploded view of the liquid-cooling heat dissipation apparatus according to the present invention.

[0014] **FIG. 3** shows another exploded view of the liquid-cooling heat dissipation apparatus according to the present invention.

[0015] **FIG. 4** shows a perspective view of the liquid-cooling heat dissipation apparatus to be assembled with a frame.

[0016] **FIG. 5** shows a perspective view of the liquid-cooling heat dissipation apparatus already assembled with the frame.

[0017] **FIG. 6** shows a perspective view of the liquid-cooling heat dissipation apparatus.

[0018] **FIG. 7** shows a sectional view of the liquid-cooling heat dissipation apparatus.

[0019] **FIG. 8** shows another sectional view of the liquid-cooling heat dissipation apparatus.

DETAILED DESCRIPTION OF THE INVENTION

[0020] The present invention is intended to provide a liquid-cooling heat dissipation apparatus. **FIGS. 2 and 3** show a preferred embodiment of the present invention,

wherein the liquid-cooling heat dissipation apparatus **100** is used for heat dissipating a heat emitting device **200** (such as CPU **200**). The heat dissipation apparatus **100** comprises a casing **1**, a first compartment **13** defined in the casing **1** and used for mounting a liquid driving unit **2**, a cooling plate module **3** arranged on bottom of the casing **1**, a second compartment **14** defined between inner space of the casing **1** and filled with cooling liquid, at least one liquid inlet **11** and liquid outlet **12** defined on the casing **1** for communicating the second compartment **14**. The cooling liquid is circulated when the liquid driving unit **2** operates.

[**0021**] In the present invention, the liquid driving unit **2** comprises a coil stage **21**, an upper cover **22**, an impeller stage **23**, and a lower cover **24** in the first compartment **13**. Moreover, at least one runner **241** is defined on bottom face of the lower cover **24** and corresponding to the liquid inlet **11** of the casing **1**, as shown in **FIG. 7**.

[**0022**] The cooling plate module **3** comprises a bottom plate **31** fixed to bottom of the casing **1**, a heat-dissipating plate **32** arranged on center of the bottom plate **31** and attached to the CPU **200**, a plurality of heat-dissipating fins **33** provided atop the bottom plate **31**. Sealing pads **15**, **34** are provided between the bottom of the casing **1** and the bottom plate **31**. Bolt members **16** fix the bottom plate **31** to the bottom of the casing **1**; and the sealing pads **15**, **34** place between the casing **1** and the bottom plate **31** hermitically to prevent leakage of the cooling liquid.

[**0023**] With reference to **FIGS. 4 and 5**, a frame **4** is screwed to bottom of the cooling plate module **3** and having an opening **41** defined at center thereof such that the heat-dissipating plate **32** exposes out from the opening **41** and is in contact with the CPU **200**. Locking tabs **42** extend outward from two opposite sides of the frame **4** and function as fixing unit to mount on the motherboard **300**.

[**0024**] With reference now to **FIG. 6**, a liquid cooling array **20** comprises a box **5**, wherein a liquid inlet **51** and a liquid outlet **52** are arranged on both sides of the box **5**, respectively. A plurality of heat-dissipating fins **53** are stacked in the center of the box **5** and arranged in a plurality of rows, wherein runner **532** is defined between two rows of heat-dissipating fins **53** and communicates with the liquid inlet **51** and the liquid outlet **52**. When the hot water in the liquid inlet **51** flows into the liquid outlet **52** through the runner **532**, the hot water is heat exchanged with the heat-dissipating fins **53** into cool water and then the cool water flows to the liquid outlet **52**.

[**0025**] In the shown embodiment, there are two liquid outlets **12** on the casing **1**. In case of only one liquid cooling array **20**, one outlet **12** is connected to the entrance **511** of the liquid inlet **51** through a duct **6**; the exit **521** of the liquid outlet **52** of the liquid cooling array **20** is connected to the liquid inlet **11** of the casing **1** through a duct **6'**. When two set of liquid cooling arrays **20** are to be used, two liquid outlets **12** on the casing **1** are connected to the two liquid cooling arrays **20** through the ducts **6**.

[**0026**] To assemble the liquid-cooling heat dissipation apparatus according to the present invention, the liquid-cooling heat dissipation apparatus **100** is first arranged atop the CPU **200** and the locking tabs **42** of the frame **4** is locked to the motherboard **300** by the bolt unit **7**. Therefore, the casing **1** is assembled atop the CPU **200** and liquid is circulated between the casing **1** and the liquid cooling array **20** through the ducts **6** and **6'**.

[**0027**] In the present invention, a vent hole (not shown) is additionally defined on the casing **1** and sealed by a cover (not shown). The cover is removed when liquid is to be filled into the casing **1**. Therefore, the casing **1** is no longer a closed space and liquid is filled into the second compartment **14** through the liquid inlet **11** of the casing **1**.

[**0028**] With reference to **FIGS. 7 and 8**, during operation of the liquid-cooling heat dissipation apparatus according to the present invention, cooling liquid in the liquid cooling array **20** is driven, by the liquid driving unit **2**, into the runner **241** of the lower cover **24** through the liquid inlet **11** of the casing **1**. Thereafter, cooling liquid is conveyed downward from the exit of the runner **241** of the lower cover **24** to the plurality of heat-dissipating fins **33** for heat exchanging into hot water. Therefore, the cooling plate module **3** has fast heat dissipation and the heat dissipation for the CPU **200** can be enhanced. Afterward, hot liquid flows to the liquid inlet **51** of the liquid cooling array **20** from the liquid outlet **12** of the casing **1** and through the duct **6**.

[**0029**] The hot liquid such as hot water conveyed to the liquid inlet **51** of the liquid cooling array **20** then flows to the runner **532** and undergoes heat exchange into cool water by the heat-dissipating fins **53** beside the runner **532**. The cool water is conveyed to the liquid outlet **52** of the liquid cooling array **20**. Thereafter, the cool water is sent to the second compartment **14** of the casing **1** through the duct **6'** for next cycle of heat exchange.

[**0030**] The liquid driving unit **2** and the cooling plate module **3** can be advantageously integrated into the casing **1** according to the present invention, while the duct is reduced to achieve compact space. Moreover, the overall structure achieves liquid storing, circulating and heat conveying function.

[**0031**] Although the present invention has been described with reference to the preferred embodiment thereof, it will be understood that the invention is not limited to the details thereof. Various substitutions and modifications have suggested in the foregoing description, and other will occur to those of ordinary skill in the art. Therefore, all such substitutions and modifications are intended to be embraced within the scope of the invention as defined in the appended claims.

What is claimed is:

1. A liquid-cooling heat dissipation apparatus used to convey heat from a heat source, comprising

a casing comprising a first compartment, a liquid driving unit, a cooling plate module on bottom of the casing, a second compartment defined between an inner space of the casing and the cooling plate module and containing a cooling liquid, at least one liquid inlet and liquid outlet being defined on the casing and communicated through the second compartment, whereby the cooling liquid is circulated when the liquid driving unit operates.

2. The liquid-cooling heat dissipation apparatus as in claim 1, wherein fixing units are provided on peripheral of the cooling plate module and assemble the cooling plate

module with a heat emitting device, wherein a bottom of the cooling plate module is in close contact with the heat emitting device.

3. The liquid-cooling heat dissipation apparatus as in claim 1, wherein a frame is assembled to a bottom of the cooling plate module, and the frame keeps the bottom of the cooling plate module in close contact with the heat emitting device.

4. The liquid-cooling heat dissipation apparatus as in claim 1, wherein the at least one liquid inlet and liquid outlet are communicated through a plurality of ducts and further communicated with a liquid cooling array through another end of the duct.

5. The liquid-cooling heat dissipation apparatus as in claim 1, further comprising at least one sealing pad placed between the casing and the cooling plate module.

6. The liquid-cooling heat dissipation apparatus as in claim 1, wherein the cooling plate module comprises a plurality of heat-dissipating fins on top face thereof.

* * * * *