Trials@uspto.gov
571-272-7822

Paper 36
Entered: August 19, 2021

UNITED STATES PATENT AND TRADEMARK OFFICE

BEFORE THE PATENT TRIAL AND APPEAL BOARD

COOLIT SYSTEMS, INC.,
Petitioner,

v.

ASETEK DANMARK A/S,
Patent Owner.

IPR2020-00523
Patent 10,078,354 B2

Before MICHAEL P. TIERNEY, *Vice Chief Administrative Patent Judge*, KEVIN W. CHERRY, and JASON W. MELVIN, *Administrative Patent Judges*.

MELVIN, *Administrative Patent Judge*.

JUDGMENT
Final Written Decision
Determining All Challenged Claims Unpatentable
35 U.S.C. § 318(a)

I. INTRODUCTION

CoolIT Systems, Inc. ("Petitioner") filed a Petition (Paper 2, "Pet.") requesting institution of *inter partes* review of claims 1, 4, 8, 14, 15, and 19 of U.S. Patent No. 10,078,354 B2 (Ex. 1001, "the '354 patent"). Asetek Danemark A/S ("Patent Owner") filed a Preliminary Response. Paper 6. We authorized Petitioner to file a Preliminary Reply (Paper 8). Paper 7. We instituted review. Paper 9 ("Institution Decision" or "Inst.").

Patent Owner filed a Response. Paper 21. Petitioner filed a Reply. Paper 27 ("Pet. Reply"). Patent Owner filed a Sur-Reply. Paper 30 ("PO Sur-Reply"). We held a hearing on May 24, 2021, and a transcript appears in the record. Paper 35 ("Tr.").

This is a final written decision as to the patentability of the challenged claims. For the reasons discussed below, we determine Petitioner has shown by a preponderance of the evidence that each of the challenged claims is unpatentable.

A. REAL PARTIES IN INTEREST

The Petition identifies CoolIT Systems, Inc., as the real party in interest for Petitioner. Pet. 1. Patent Owner identifies Asetek Danmark A/S, Asetek USA, Inc., Asetek A/S, and Asetek Holdings, Inc., as the real parties in interest for Patent Owner. Paper 4, 1 (Patent Owner's Mandatory Notices).

B. RELATED MATTERS

The parties identify *Asetek Danmark A/S v. CoolIT Systems, Inc.*, Case No. 3:19-cv-00410-EMC (N.D. Cal.) (complaint served on February 7, 2019, currently pending) as a related co-pending district court litigation. Pet.

1; Paper 4, 1. The parties also identify the following *inter partes* reviews involving patents that are related to the ’354 patent: IPR2020-00522, *Inter Partes* Review of U.S. Patent No. 10,078,355 B2, filed on February 7, 2020; and IPR2020-00524, *Inter Partes* Review of U.S. Patent No. 9,733,681 B2, filed on February 7, 2020. Pet. 1; Paper 4, 1.

C. THE ’354 PATENT

The ’354 patent is titled “Cooling System for a Computer System.” Ex. 1001, Code (54). It issued from an application filed June 19, 2017, as a continuation of application No. 15/347,938, which issued as Patent No. 9,715,260 and claims priority to a PCT application filed November 8, 2004, which issued as Patent No. 7,971,632. *Id.* at Code (60).

The ’354 patent relates to a liquid-cooling system for a computer system. *Id.* at Code (57). The specification contends that liquid cooling is generally more efficient and quieter than air cooling, but that a liquid-cooling design consists of “many components,” which increases the total installation time and risk of leakage of the cooling liquid from the system. *Id.* at 1:46–56. Thus, one object of the invention is to provide a small and compact liquid-cooling solution that is more efficient than existing air-cooling arrangements, can be produced at low cost enabling high production volumes, is easy to use and implement, can be used with existing CPU types and computer systems, and requires a low level of maintenance or no maintenance at all. *Id.* at 1:60–2:3.

An illustrative embodiment of such a system is depicted in Figures 7 and 8, reproduced below.

Cooler Master Co., Ltd. Ex. 1011, Page 3 of 32
Cooler Master Co., Ltd. v. Asetek Danmark A/S
IPR2023-00668

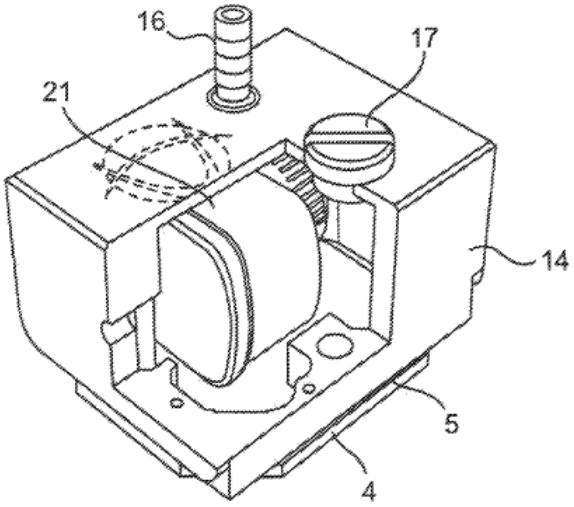

FIG. 7

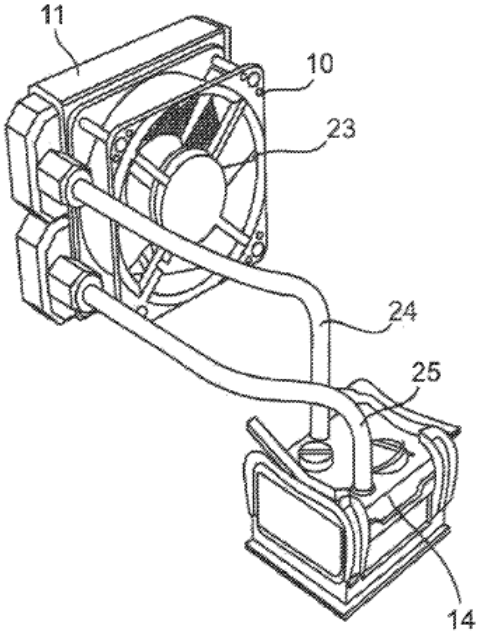

FIG. 8

Figure 8 is a perspective view of the cooling system showing reservoir housing 14 with heat exchanging surface 5 (shown in Figure 7) and pump 21 (shown in Figure 8) inside the reservoir. *Id.* at 13:29–31. Figure 7 is a cut-out view into reservoir housing 14, when the reservoir, pump 21, and heat exchanging surface 4 are situated inside the reservoir. *Id.* at 12:62–64. The reservoir has tube inlet connection 15 (not shown in Figure 7) through which the cooling liquid enters the reservoir. *Id.* at 12:64–66. From the tube inlet connection, the cooling liquid flows through the reservoir passing heat exchanging surface 4 and enters the inlet of the pump. *Id.* at 12:67–13:2. After the cooling liquid flows through the pump, the cooling liquid passes out of the outlet of the pump and further out through tube outlet connection 16. *Id.* at 13:2–4. As shown in Figure 8, tube inlet connection 15 and tube outlet connection 16 are connected to heat radiator 11 by means of connecting tubes 24 and 25. *Id.* at 13:32–35. Cooling liquid flows into and

out of the reservoir and the heat radiator through connecting tubes 24 and 25, respectively. *Id.* Heat radiator 11 (shown in Figure 8) cools the cooling liquid before it passes back into the reservoir. *Id.* at 13:35–43.

The reservoir may be provided with channels or segments for establishing a certain flow-path for the cooling liquid through the reservoir to prevent the cooling liquid from passing the reservoir too quickly to take up a sufficient amount of heat from the heat exchanging surface. *Id.* at 13:63–14:12. Figure 9 is reproduced below:

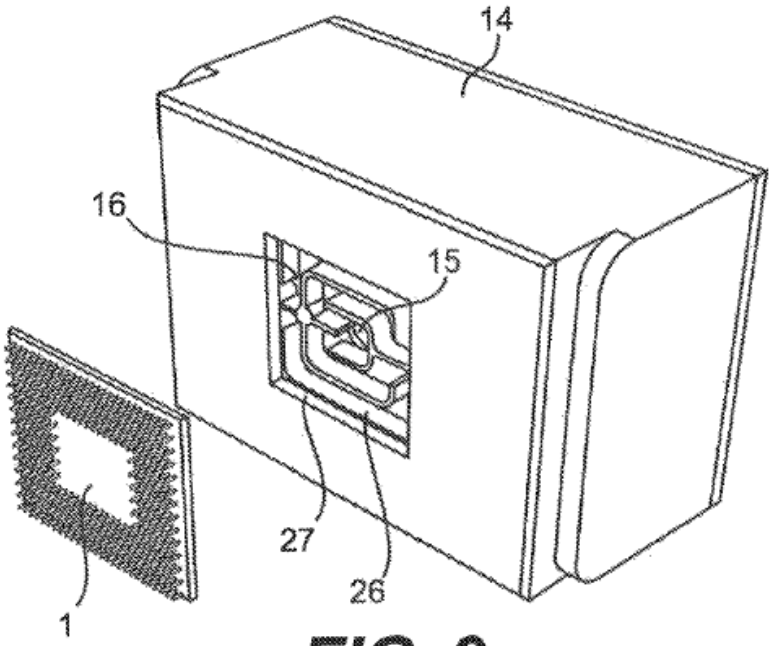

FIG. 9

Figure 9 depicts an embodiment of reservoir housing 14 in which channels 26[1] are provided to direct the flow of cooling liquid from inlet 15 to outlet 16. *Id.* at 15:25–34.

[1] Although the text refers to "channels 25," that designation appears to be in error and we understand the structure labeled "26" in Figure 9 to depict the described channels. *See* Ex. 1001, 15:25–34.

D. Challenged Claims

Challenged claims 1, 8, and 15 are independent, and claim 1 is reproduced below:

> 1. A cooling system for a computer system processing unit, comprising:
>
> a reservoir configured to circulate a cooling liquid therethrough, the reservoir including:
>
> an upper chamber and a lower chamber, wherein the upper chamber and the lower chamber are vertically displaced fluid-containing chambers that are each surrounded by boundary walls;
>
> a first passage that fluidly couples the lower chamber to the upper chamber, where the first passage is substantially central to the lower chamber;
>
> a second passage positioned at a perimeter of the lower chamber;
>
> wherein the lower chamber includes a plurality of channels configured to split the flow of cooling liquid and direct the cooling liquid from the central region toward the perimeter of the lower chamber;
>
> a heat exchanging interface attached to the reservoir to form a boundary wall of the lower chamber, the heat exchanging interface provides thermal contact between the processing unit and the cooling liquid;
>
> a pump having a motor and an impeller, the impeller being positioned within the upper chamber of the reservoir;
>
> and a radiator spaced apart from and fluidly coupled to the reservoir.

Id. at 18:62–19:20. Independent claims 8 and 15 recite similar limitations. *Id.* at 19:41–20:2, 20:23–49. Claims 4, 14, and 19 indirectly depend from claims 1, 8, and 15, respectively.

E. Prior Art and Asserted Grounds

Petitioner asserts the following ground of unpatentability:

Claims Challenged	35 U.S.C. §	References/Basis
1, 8, 15	103	Batchelder[2], Shin[3]
4, 14, 19	103	Batchelder, Shin, Cheon[4]

Pet. 3. Petitioner also relies on the Declaration of Marc Hodes, Ph.D. (Ex. 1003). *See generally* Pet. 3.

II. ANALYSIS

A. Level of Ordinary Skill in the Art

Petitioner proposes that a person of ordinary skill in the art

> would have been knowledgeable regarding liquid cooling systems for computer systems, would have earned at least a bachelor's degree, such as an B.S. (bachelor of science), or equivalent thereof, in electrical or mechanical engineering or a closely-related field, and would have possessed at least two or three years of experience in liquid cooling systems for computer systems or in similar systems.

Pet. 6 (citing Ex. 1003 ¶¶ 14–19). Patent Owner does not dispute this definition of a person of ordinary skill. *See generally* PO Resp. We adopt Petitioner's proposed level of ordinary skill, as it appears to be consistent with the level of skill reflected by the specification and in the asserted prior art references. *See Okajima v. Bourdeau*, 261 F.3d 1350, 1355

[2] US 6,019,165, issued Feb. 1, 2000 (Ex. 1006).
[3] Translation of Japanese Application Pub. 2002-151638, published May 24, 2002 (Ex. 1007).
[4] US 5,731,954, issued Mar. 24, 1998 (Ex. 1008).

(Fed. Cir. 2001) (holding that the prior art itself can reflect the appropriate level of ordinary skill in the art).

B. Claim Construction

For an *inter partes* review petition filed after November 13, 2018, we construe claim terms "using the same claim construction standard that would be used to construe the claim in a civil action under 35 U.S.C. 282(b)." 37 C.F.R. § 42.100(b) (2019). Petitioner proposes constructions for "reservoir," "chamber," "impeller," and "radiator." Pet. 7–9. We determined in the Institution Decision that no term required an express construction. Inst. 10–11. Patent Owner agrees that no issue before us requires express construction. PO Resp. 6–7. We maintain our view that no claim term requires express construction in this Final Written Decision.

C. Obviousness over Batchelder and Shin

Petitioner asserts that Batchelder teaches most limitations of claim 1 with an embodiment depicted in Batchelder's Figure 2, reproduced below:

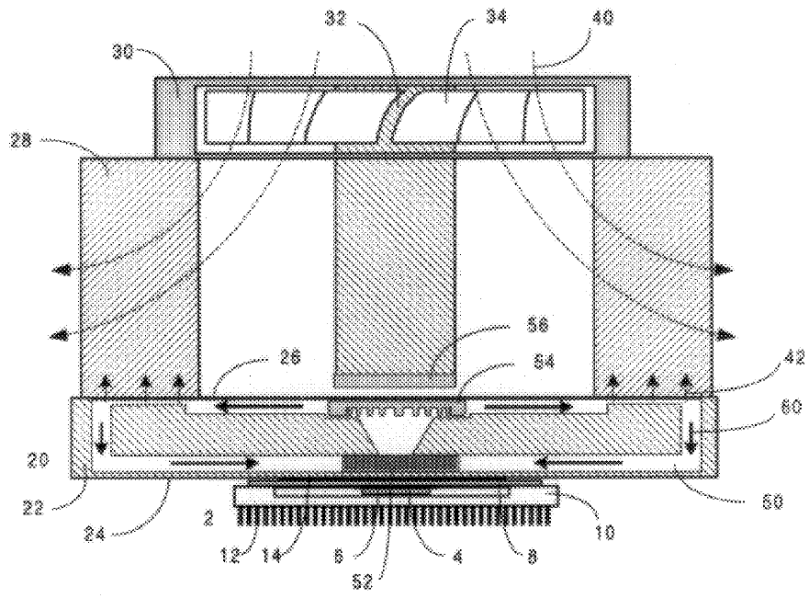

FIG.2

Ex. 1006, Fig. 2. Figure 2 depicts a heat-transfer device where heat from metal cover 8 of semiconductor chip 4 moves into lower surface 24 of active spreader plate 20, into metallic fin array 52, then into heat-transfer fluid sealed in flow channels 50 inside active spreader plate 20. Figure 2 also depicts a centripetal or centrifugal pump with impeller 54, immersed in heat-transfer fluid and driven through magnetic coupling to rotor 32, which is outside active spreader plate 20. *Id.* at 4:63–26. As indicated by arrows in Figure 2, the heat-transfer fluid flows outward from impeller 54 to the perimeter of active spreader plate 20, down to the bottom surface, inward to the center where metallic fin array 52 is located, and then up a passage back to impeller 54. *Id.* at 5:21–32, Fig. 2.

Petitioner relies on Shin for certain aspects of the claims. Shin discloses a cooling system for computer components, in which a pump is affixed to a liquid-cooled heat sink and circulates coolant through the heat

sink and then through a "heat exchanger" to release heat to the environment. Ex. 1007 ¶¶ 23–25, Fig. 3. Shin's Figure 3 is reproduced below:

FIG. 3

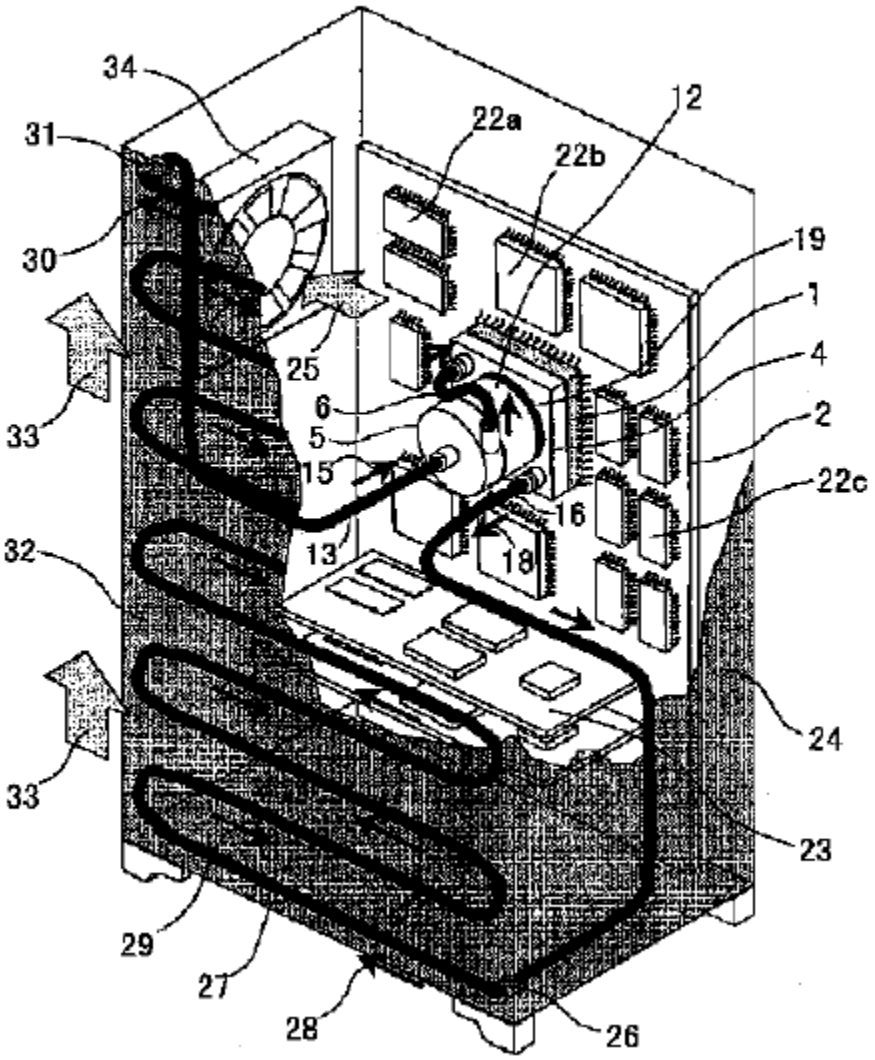

Id. at Fig. 3. Figure 3 depicts an embodiment of Shin's liquid-cooled heat sink 4, placed on heat-generating element 1 on wiring board 2, which is housed inside case 24; fan 34 provides air cooling for multiple air-cooled components 22a, 22b, 22c; liquid coolant circulates through hose 16 to heat exchanger 27 in thermal contact with the side of panel 32 so that heat from

the liquid coolant spreads through conduction to side panel 32 and is released by both natural convection and cooling air 25 provided by fan 34. *Id.* ¶ 25.

1. Claim 1

Claim 1 requires both an "upper chamber" and a "lower chamber," which Petitioner maps to the flow channels on the top and bottom of Batchelder's active spreader plate, respectively. Pet. 16–18 (showing annotated versions of Batchelder's Figures 2, 7, and 8). Claim 1 further requires that "the lower chamber includes a plurality of channels configured to split the flow of cooling liquid and direct the cooling liquid from the central region toward the perimeter of the lower chamber."

Petitioner asserts first that Batchelder's flow pattern satisfies this requirement because it flows upward from the central region and through the upper flow passages before reentering the lower flow passages at the perimeter of the active spreader plate. *Id.* at 30 (showing an annotated version of Batchelder's Figure 2). We do not find that assertion persuasive because the claim requires that the "lower chamber" includes channels that split the flow and direct it "from the central region toward the perimeter of the lower chamber." That plain language requires the flow enter the lower chamber in the central region and proceed to the perimeter of the lower chamber. Such an understanding is consistent with the embodiment shown in Figure 9 of the '354 patent. Ex. 1001, 15:25–34, Figs. 9, 10. Accordingly, claim 1 does not read on Batchelder's disclosed flow pattern. *See* PO Resp. 18–25.

Petitioner asserts further that it would have been obvious to a skilled artisan "to reverse the flow direction such that the cooling liquid is directed

from the central region toward the perimeter of the lower chamber entirely within the lower chamber." *Id.* at 30. According to Petitioner, doing so "could be facilitated by using the pump (e.g., displacement pump 280) disclosed in FIG. 9 (upper-right) of Batchelder." *Id.* at 30–31 (citing Ex. 1003 ¶ 79; Ex. 1006, 8:14–36). Petitioner asserts that it would have been obvious to try the claimed flow pattern because the flow could only move in two directions (center-to-periphery or periphery-to-center). *Id.* at 33. Finally, Petitioner asserts that skilled artisans had reason to change the flow pattern because they would have known "that heat can negatively impact the life of a pump" and the modification would "allow warm fluid to flow away from the pump rather than toward the pump." *Id.* at 34.

As to the difficulty of modifying Batchelder, Petitioner asserts that skilled artisans would have had a reasonable expectation of success. *Id.* at 33 (citing Ex. 1003 ¶ 80). In particular, Petitioner asserts that "cooling a heat generating component using liquid to absorb the heat is a well-documented technique," such that skilled artisans would have configured the flow "to maximize heat absorption" and "control the way liquid absorbs heat as it moves across a surface." *Id.*

Patent Owner disputes both whether skilled artisans would have had reason to make the asserted combination and also whether they would have had a reasonable expectation of success in doing so. PO Resp. 26–29. According to Patent Owner, the claimed flow direction is "critical for optimal heat removal" rather than being a simple matter of choice. *Id.* at 26–27. For support, however, Patent Owner relies on its declarant's statements. *Id.* (citing Ex. 2018 ¶ 52). The specification does not disclose a particular benefit to the claimed flow direction. *See* Tr. 23:5–11, 25:5–7, 27:3–11. But

the specification discloses other approaches, such as the side-to-side flow depicted in Figure 15. Tr. 27:3–7. Indeed, rather than identifying center-to-periphery flow as beneficial, the specification gives flexible guidance for arranging flow channels. Ex. 1001, 15:63–67 ("The configuration of the channels may be designed and selected according to any one or more provisions, i.e. high heat dissipation, certain flow characteristics, ease of manufacturing etc.").

Moreover, the record reflects that skilled artisans would have had reason to configure the flow as claimed, without the claim language for guidance. According to each party's declarant, configuring the flow to move from center to periphery provided certain benefits. Ex. 1003 ¶ 81 (reasoning that pumping hot liquid away from the pump would increase pump service life); Ex. 2018 ¶ 52 (reasoning that providing cooler liquid to the hottest central region first would improve heat-removal efficiency). In particular, we credit the testimony of Petitioner's declarant that reversing Batchelder's flow to pump heated liquid away from the pump would have benefited pump life by reducing its temperature. Ex. 1003 ¶ 81.

Patent Owner argues that because the pump disclosed in Batchelder's Figure 2 moves fluid radially outwards from the impeller, Petitioner's proposed modification would change "the entire pumping configuration" because it would require liquid to flow towards the center of the impeller. PO Resp. 28 (citing Ex. 1006, 5:26–32; Ex. 2018 ¶ 54). Patent Owner does not adequately address that Batchelder also discloses "several examples of fluid impellers that can effectively be used in an active spreader plate," an element described in connection with the Figure 2 embodiment. Ex. 1006, 4:63–67, 8:14–67. The Petition specifically identified "displacement pump

280" as the proposed mechanism for reversing flow. Pet. 30–31 (citing Ex. 1006, 8:14–36).

Indeed, Batchelder's displacement pump 280 exposes the problem with Patent Owner's argument. Although Patent Owner argues that pumping fluid from the periphery to the center of a pump is inefficient and undesirable, Batchelder's displacement pump 280 does not use that flow path. An excerpt of Batchelder's Figure 9 is reproduced below:

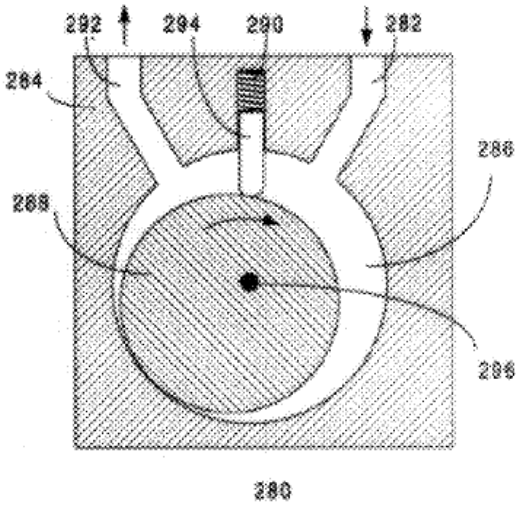

Ex. 1006, Fig. 9. The excerpt depicts displacement pump 280, in which heat transfer fluid feeds the pump through channel 282 leading to circular cavity 286, in which eccentric disc-shaped rotor 288 rotates due to external magnetic fields, and movable plunger 294 presses against the rotor such that the rotor moves fluid out channel 282. *Id.* at 8:27–36.

As shown, the fluid in Batchelder's displacement pump does not have a net change in radial position from the pump's entrance to its exit. *Id.* at Fig. 9. Thus, Patent Owner's reliance on Batchelder's disclosure of pumping liquid "radially outward" from impeller 54 (PO Resp. 28; PO Sur-Reply 16–17; Ex. 2018 ¶ 54) does not adequately consider the alternative flow path of

Batchelder's displacement pump 280. While Patent Owner argues that the proposed change would affect Batchelder's "entire pumping configuration," we find the exercise would not have dissuaded skilled artisans from the change. Batchelder specifically instructs that the exemplary pumps shown in Figure 9 "can effectively be used in an active spreader plate" and that each is "motivated by moving external magnetic fields," as in the primary embodiment. Ex. 1006, 8:14–16. Changes to the overall configuration would of course have been required to accommodate the fluid entrance and exit locations on displacement pump 280, but nothing about those changes appears to stretch the abilities of skilled artisans at the time. *See* Ex. 1012 ¶ 11–14

To be clear, we agree with Petitioner that skilled artisans would have had reason to modify Batchelder's primary embodiment to reverse its flow for a potential benefit to pump life, and that Batchelder's disclosure of displacement pump 280 taught a method of facilitating such a reverse flow with a reasonable expectation of success.

In the Sur-Reply, Patent Owner raises additional arguments against the asserted modification. In particular, Patent Owner argues that any improvement to pump life is speculative, as shown by its own declarant's statements. PO Sur-Reply 15 (citing Ex. 1011, 72:15–73:25, 76:21–78:12). Similarly, Patent Owner argues that any benefit to the impeller's magnetic coupling by operating at a lower temperature would not overcome disadvantages to modifying Batchelder. *Id.* at 15–16 (citing Ex. 1011, 90:24–94:6). While the Response challenged the modification by arguing that Petitioner provided inadequate reason to modify Batchelder's flow direction (PO Resp. 26–29), it did not raise these additional arguments that

challenged Petitioner's reasoning. Patent Owner's assertion that it "specifically disputed Petitioner's motivation to reverse the flow direction in Batchelder" (PO Sur-Reply 11 n.1) does not persuade us otherwise because the Response arguments were limited to the points discussed above.[5] Patent Owner was fully aware of Petitioner's pump-life justification for the asserted modification but did not address it in the Response. Accordingly, we determine that Patent Owner has waived the arguments. *See* Paper 10, 8 ("Patent Owner is cautioned that any arguments not raised in the response may be deemed waived."); *In re NuVasive, Inc.*, 842 F.3d 1376, 1380–81 (Fed. Cir. 2016) (explaining that the patent owner waived an issue presented in its preliminary response that it failed to renew in its response during trial); Consolidated Trial Practice Guide 52 (Nov. 2019) ("Once a trial is instituted, the Board may decline to consider arguments set forth in a preliminary response unless they are raised in the patent owner response."). Similarly, the Petition did not rely on Batchelder's alternative pumps beyond displacement pump 280. *See* Pet. 30–31. Therefore, we give no weight to Petitioner's assertions in the Reply regarding Batchelder's viscosity pump 260. Pet. Reply 11–15.

For the claimed "radiator spaced apart from and fluidly coupled to the reservoir," Petitioner asserts that it would have been obvious for a skilled

[5] Patent Owner argues that by asserting the flow direction was a "design choice," Petitioner relies on a legal theory inapplicable where the selected design has a functional benefit. Sur-Reply 8–9. Because we do not understand Petitioner to rely on "design choice" as that phrase is used in the case law (where a change is made without a functional impact), Patent Owner's argument is inapposite. As noted in our discussion, Petitioner provides evidence that skilled artisans would have understood a performance benefit to modifying Batchelder's flow direction.

artisan to modify Batchelder's system to include Shin's heat exchanger 27, 28, and 29. Pet. 40–46 (citing Ex. 1007 ¶ 25, Fig. 3). Petitioner submits that modifying Batchelder's device to include Shin's radiator would have been obvious because "[a] radiator is [a] well known component used to transfer thermal energy (e.g., heat) from one medium to another medium." Pet. 43 (citing Ex. 1003 ¶ 24). According to Petitioner, a skilled artisan had reason to make the change to Batchelder "to further increase heat management efficiency by using an outside or external radiator." *Id.* at 44.

Patent Owner challenges Petitioner's reasoning and argues that Petitioner fails to support why a skilled artisan would have modified Batchelder to use Shin's external radiator. PO Resp. 37–41. Patent Owner notes that Batchelder already includes a "heat absorbing device 28" to dissipate heat to the environment and criticizes Petitioner for proposing to add an external radiator without support in Batchelder that doing so would "increase heat management efficiency." *Id.* at 37–38 (quoting Ex. 1003 ¶ 99). Patent Owner contends that adding an external radiator "would be a superfluous addition to Batchelder because heat from the cooling liquid is already sufficiently removed by heat absorbing device 28." *Id.* at 39.

Petitioner points out that, although Batchelder includes one mechanism for transferring heat to the environment, it also recognizes that industry trends showed an ongoing need to improve heat dissipation. Pet. Reply 19 (citing Ex. 1006, 1:34–38). Thus, reasons Petitioner, enhancing Batchelder's capacity with Shin's external radiator would have offered a benefit. *Id.* We agree with Petitioner that Batchelder's recognition of ever-increasing thermal demands supports that adding a remote radiator would have provided a potential benefit to Batchelder's design because it "would

allow heat to escape the system." Pet. 44. In that regard, Shin's radiator was a known element for releasing heat from a fluid system. *Id.* at 40–43. Thus, we conclude that Petitioner's "proposed modification amounts to nothing more than reorganizing familiar elements according to known methods to yield predictable results." *Grit Energy Sol'ns, LLC v. Oren Techs.*, 957 F.3d 1309, 1324 (Fed. Cir. 2020) (citing *KSR Int'l Co. v. Teleflex Inc.*, 550 U.S. 398, 416 (2007)).

Relatedly, Patent Owner argues that Batchelder teaches away from using an external radiator, because doing so would require a second motor for the radiator's fan. PO Resp. 40–41. Batchelder recognizes the "cost disadvantage of requiring separate motors to impel the heat transfer fluid and to impel the atmosphere." Ex. 1006 1:67–2:1. Similarly, it recognizes "reliability exposure associated with hoses and fittings." *Id.* at 2:4–5. Notably, however, Batchelder does not indicate that using a separate radiator (and associated fan motor) would not function to meet cooling needs. We find that Batchelder expresses a preference for the simpler design without a radiator but does not teach away from using one. Additionally, Petitioner point out that skilled artisans would have understood that an external radiator could often use an existing computer-case fan, therefore not requiring an additional fan motor. Reply 20 (citing Ex. 1012 ¶ 26). Indeed, Shin's radiator (heat exchanger 27) is installed on a side panel of the computer case that contains fan 34 and the radiator does not use a separate fan. Ex. 1007 ¶ 25, Fig. 3.

Patent Owner argues that adding a remote radiator to Batchelder would contradict its objective of an integrated system without hoses or fluid couplings and would therefore "render Batchelder inoperable for its intended

purpose of providing an integrated, low-cost, and reliable heat exchange system." PO Resp. 40. We do not agree with Patent Owner's characterization of Batchelder's intended purpose. Batchelder expresses a number of objectives, including some that would not be impacted by adding an external radiator—a design compatible with passive spreader heat sinks and a design without moving or rotary mechanical seals. *See* Ex. 1006, 2:40–57.

We find that skilled artisans would have understood that modifying Batchelder's design to use an external radiator would have introduced certain deficiencies (assembly cost and reliability exposure (Ex. 1006 2:4–5)) but would also have brought the benefit of additional cooling capacity (Ex. 1003 ¶ 99). That tradeoff does not exclude Shin's radiator from use with Batchelder's design. *See Winner Int'l Royalty Corp. v. Wang*, 202 F.3d 1340, 1349 n.8 (Fed. Cir. 2000) ("The fact that the motivating benefit comes at the expense of another benefit, however, should not nullify its use as a basis to modify the disclosure of one reference with the teachings of another. Instead, the benefits, both lost and gained, should be weighed against one another."). When we weigh the competing factors, as expressed in the record, we conclude that skilled artisans would have had adequate reason to modify Batchelder as Petitioner asserts.

Other than as discussed, Patent Owner does not challenge Petitioner's assertions against claim 1. Thus, any such challenge is waived. *See* Paper 10, 8 ("Patent Owner is cautioned that any arguments not raised in the response may be deemed waived."); *In re NuVasive, Inc.*, 842 F.3d 1376, 1380–81 (Fed. Cir. 2016); Consolidated Trial Practice Guide 52 (Nov. 2019). We have reviewed the record, including both parties' contentions and evidence,

and conclude that Petitioner has shown by a preponderance of the evidence that the combination of Batchelder and Shin discloses the limitations of claim 1, and that skilled artisans would have had reason to make the combination as asserted, with a reasonable expectation of success.

2. Claim 8

For independent claim 8, which recites limitations similar to claim 1, Petitioner relies on the same assertions as for claim 1. Pet. 47–49. Petitioner asserts that claim 8 is broader than claim 1 in one regard—claim 8 does not include claim 1's "plurality of channels configured to split the flow of cooling liquid and direct the cooling liquid from the central region toward the perimeter of the lower chamber." *Id.* at 48; *compare* Ex. 1001, 18:62–19:20, *with id.* at 19:41–20:2. Like claim 1, claim 8 recites that the passage coupling the upper chamber to the lower chamber "is substantially central to the lower chamber" and that the lower chamber includes "a plurality of channels configured to direct the flow of cooling liquid across the lower chamber." Ex. 1001, 19:49–51, 19:54–56. Thus, claim 8 does not require the same flow direction as claim 1.

In light of not restricting flow direction, claim 8's language reads on Batchelder's disclosures even without modifying Batchelder to reverse its flow. Ex. 1006, Figs. 2, 6, 7, 8, 4:63–5:6, 7:4–22, 7:30–36; *see* Pet. 48. Patent Owner does not contest that point. *See* PO Resp. 16–37 (challenging disclosure or obviousness of the claimed flow direction for only claims 1 and 15). In other regards, the parties treat claim 8 the same as claim 1, and we reach the same conclusions for the reasons discussed above.

3. Claim 15

Independent claim 15 recites limitations similar to those of claim 1. Petitioner asserts obviousness based on the same disclosures of Batchelder and Shin. Pet. 49–54. Patent Owner argues that, as with claim 1, Batchelder does not disclose the claimed flow orientation, from the center to the periphery of the lower chamber. PO Resp. 29–31. For the reasons discussed above for the flow required by claim 1, we agree. *See supra* at 11.

Patent Owner raises the same arguments against reversing Batchelder's flow direction as discussed above for claim 1. *Compare* PO Resp. 26–29, *with id.* at 33–35. Those arguments are not persuasive for the reasons discussed above. *See supra* at 12–15. We conclude that Petitioner has shown by a preponderance of the evidence that skilled artisans would have had reason to reverse Batchelder's flow to arrive at the claimed configuration.

Patent Owner argues further that the combination of Batchelder and Shin does not disclose claim 15's "second passage positioned at a perimeter of the lower chamber" that directs cooling liquid from the "lower chamber." PO Resp. 35–37. That argument, however, ignores that Petitioner asserts a combination in which Batchelder's flow direction is reversed. Pet. 28–34, 50–53. In that combination, with reversed flow, the cooling liquid would enter Batchelder's lower chamber at the center and exit at the periphery, as claimed.

In other regards, the parties treat claim 15 the same as claim 1, and we reach the same conclusions for the reasons discussed above.

4. Objective Indicia of Nonobviousness

Patent Owner argues that the record supports objective indicia that militate toward a conclusion of nonobviousness. PO Resp. 46–71. Patent Owner submits that its commercial embodiments—"Asetek's Generation 5, 6, and 7 products"—establish a presumption of nexus between the objective indicia and the patented invention because the products "embody and are coextensive with the independent claims of the '354 patent." PO Resp. 48–49. Patent Owner provides a chart showing how each limitation of claims 1, 8, and 15 reads on an exemplary product, the Corsair H80i v2. *Id.* at 49–61.

Patent Owner's contentions, however, suffer from a critical deficiency in identifying a first passage substantially central to the lower chamber. The deficiency is apparent when comparing Patent Owner's contentions for the first passage with those for the second passage, which must be positioned at a perimeter of the lower chamber. Patent Owner's contention for the first passage is reproduced below:

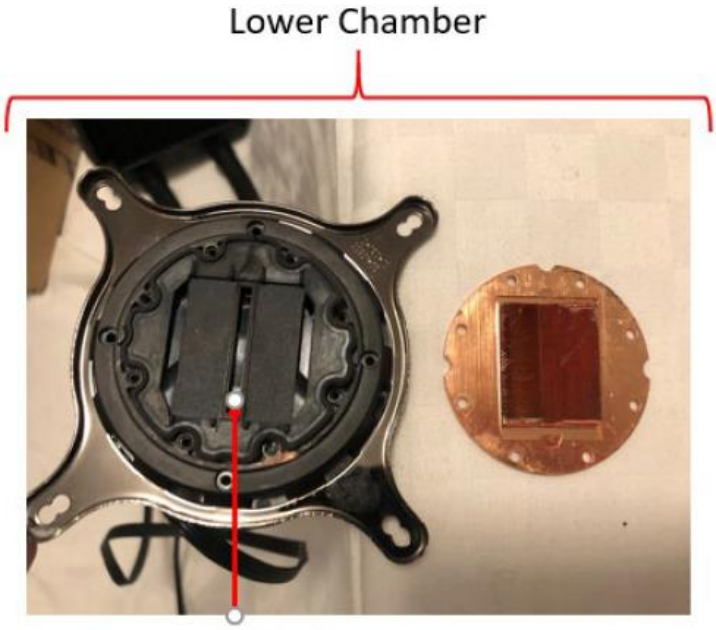

PO Resp. 51. The image shows the device's lower chamber with an arrow pointing to a passage, but that passage is not central to the lower chamber. Patent Owner's contention for the second passage is reproduced below:

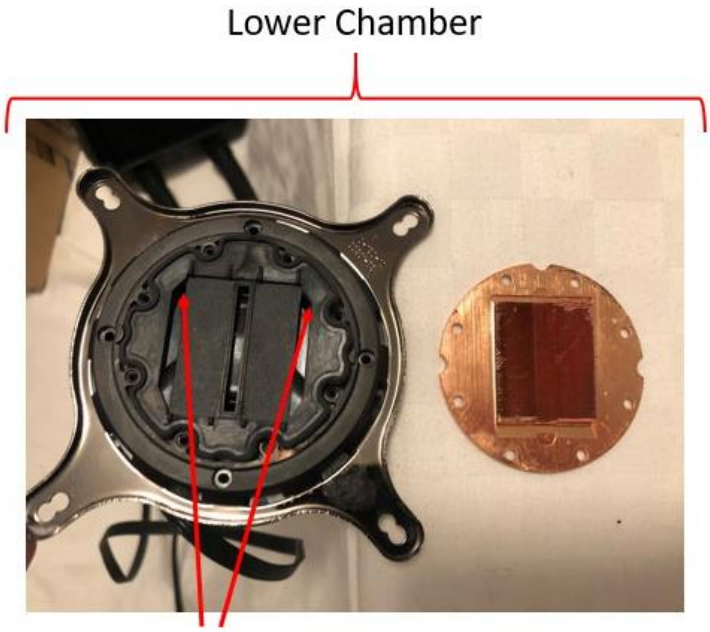

Id. The image shows the device's lower chamber with arrows pointing to two passages that are near the perimeter of the chamber.

The problem with Patent Owner's contention regarding the first passage is that it is only marginally farther from the chamber's perimeter than the second passages. *See id.* Based on the evidence, we find that the first passage in Petitioner's device is not substantially central to the lower chamber, as required by claims 1 and 8. Claim 15 does not recite that the passage be "substantially central to the lower chamber" but does require the flow through the first passage "is directed along a plurality of channels from a central region of the lower chamber outward." *See id.* at 59. The noncentral passage identified by Patent Owner does not satisfy that claim

language because flow that does not enter the lower chamber in the central region cannot be directed *from* the central region outward.

Patent Owner does not address the mismatch between the claim language and its contentions. Rather, it simply asserts that the pictured product satisfies the claims, without elaboration. *See id.* at 51, 54–55, 58–59.[6] Although Patent Owner offers support from its declarant, that support contains no analysis that might further explain how the claim language maps onto the commercial products. Ex. 2018 ¶ 75. The declaration includes a number of charts, but each suffers from the same deficiency discussed above, in that the purported passage neither is central to the lower chamber nor creates flow from a central region of the lower chamber outward. *See* Ex. 2018 (Ex. B, 4, 9, 13–15; Ex. C, 3, 8, 12–13; Ex. D, 3, 8, 12–13). As with Patent Owner's Response, its declarant's charts merely annotate photographs of the commercial embodiments and assert that they contain the claim limitations—the assertions repeat the claim language without any useful analysis. *Id.* Patent Owner's assertions fail to persuade us that its commercial embodiments embody the claimed features. Thus, Patent Owner is not correct that "nexus is satisfied (by a presumption of nexus)." *See* PO Sur-Reply 23; *FOX Factory, Inc. v. SRAM, LLC*, 944 F.3d 1366, 1373 (Fed. Cir. 2019) (explaining that a presumption of nexus requires the Patent

[6] At the hearing, Patent Owner asserted that its identification of a central passage is consistent with "the interpretations that the parties have taken in the litigation." Tr. 32:22–23; *see id.* at 29:21–33:16 (discussing Patent Owner's identification of a first passage). That argument is not persuasive at least because it seeks a finding based on information not of record. Petitioner has not taken a position in this proceeding that would support Patent Owner's assertion that the lower chamber of its commercial embodiments contains a central passage or one that directs flow outward.

Owner show a specific product embodies the claimed features and is coextensive with them).

Without a presumption of nexus, Patent Owner's contentions regarding objective indicia do not persuade against a conclusion of obviousness. The evidence of those indicia does not appear to relate to an aspect of Patent Owner's commercial product beyond what existed in the prior art. *See* Pet. Reply 24–30. Indeed, Patent Owner does not contend otherwise, as it relies on the presumption to establish a nexus, rather than evidence of direct nexus. *See* PO Sur-Reply 21–22. We conclude that, by failing to establish that it is entitled to a presumption of nexus, Patent Owner does not provide persuasive evidence of nonobviousness.

5. Summary

Patent Owner does not offer any further arguments against obviousness over Batchelder and Shin. We have considered all of the parties' contentions and evidence regarding obviousness over Batchelder and Shin, and conclude that Petitioner has proven obviousness of claims 1, 8, and 15 over Batchelder and Shin.

D. Obviousness over Batchelder, Shin, and Cheon

For claims 4, 14, and 19, which indirectly depend from claims 1, 8, and 15, respectively, Petitioner asserts that Shin and Cheon disclose the additional limitations of those claims. Pet. 54–63.

Petitioner first addresses the limitations of claims 2, 9, and 16, from which claims 4, 14, and 19 depend, respectively. Pet. 54–55. Each of claims 2, 9, and 16 recites "a control system . . . configured to adjust a speed of the pump." Ex. 1001, 19:21–23, 20:3–5, 20:50–52. Petitioner relies on Shin's

disclosure that its system "allows control of cooling power by changing the rotational speed of the pump." Pet. 54–55 (quoting Ex. 1007 ¶¶ 35, 19). Petitioner reasons that modifying Batchelder to use Shin's control would have been an obvious way to use a "known technique to provide liquid cooling functionality while being mindful of power consumption." *Id.* at 55. Petitioner further asserts that the combination would conserve power when a system has low heat production. *Id.*

1. Claims 4 and 19

Claim 4 further requires the control system be "configured to measure one of an operating load or an operating temperature of the processing unit and adjust the pump based on the measured value." Ex. 1001, 19:26–29. Claim 19 similarly requires the control system be "configured to determine a required cooling capacity of the cooling system and adjust a rotational speed of the pump based on the required cooling capacity." *Id.* at 20:59–62. For both claims, Petitioner relies on Cheon as disclosing a control system configured to measure operating temperature of the processing unit being cooled and adjust the pump based on that measured value. *Id.* at 55–58 (citing Ex. 1008, 5:66–6:16), 63. Petitioner reasons that skilled artisans would have had reason to include Cheon's teachings "to provide an automatic mechanism to control pump speed for purposes of power conservation." *Id.* at 56. Petitioner asserts further that the modification would "further increase the longevity of the pump by selectively activating when needed." *Id.* at 56–57. Petitioner points out that all three references (Batchelder, Shin, and Cheon) are directed to low-cost, high-reliability computer-cooling systems. *Id.* at 57.

Patent Owner does not challenge Petitioner's assertions against claims 4 and 19, other than through the independent claims addressed above. *See* PO Resp. 42. We have considered the full record, including Patent Owner's arguments for the independent claims and objective indicia of nonobviousness, and find Petitioner's contentions persuasive for claims 4 and 19. *See* Pet. 54–58, 62–63.

2. Claim 14

Claim 14 depends from claim 9, which depends from claim 8; claim 14 therefore requires a "control system . . . configured to adjust a speed of the pump" and "configured to adjust a rotational speed of a fan and a rotational speed of the pump to reduce noise and provide a required cooling capacity of the cooling system." Ex. 1001, 20:3–5, 19–22.

Petitioner asserts that fans for cooling were commonplace at the time of patenting, as the '354 patent shows "the typical components in a liquid-cooling type CPU cooling arrangement" of the prior art as including a fan. Pet. 61 (quoting Ex. 1001, 7:7–9, 8:1–18, Fig. 3). Petitioner reasons that using such a fan would have had "a known air cooling effect and potential associated noise." *Id.* at 62. Thus, Petitioner explains the benefit that would have motivated using a fan (its air-cooling effect) and a tradeoff it would involve (associated noise).

Petitioner relies on Shin as disclosing a pump motor with easily controlled speed to permit "control of cooling power." Pet. 59 (quoting Ex. 1007 ¶ 19). Petitioner notes that Shin's implementation shows a fan in the computer case into which Shin's cooling device is installed. *Id.* (citing Ex. 1007 ¶¶ 23–24, Fig. 3). Petitioner reasons that a skilled artisan "would know that someone who has such concerns about controlling the speed of

the pump would have the same concerns about controlling the speed of the fan." Pet. 61 (citing Ex. 1003 ¶ 137). Petitioner relies on Cheon's disclosures asserted against claim 4 to argue that skilled artisans would have used Cheon's methods to control pump and fan speed to "conserve[e] power and . . . increase[e] longevity of components when they are not needed." *Id.* (citing Ex. 1003 ¶ 130).

Thus, Petitioner asserts that skilled artisans would have had reason to use a fan for the additional cooling it provided, as was known in the art, and would have used Cheon's control method to automatically control the speed of both the circulating pump and the fan, in order to conserve power and maximize component life. *See* Pet. 55–62. Patent Owner disputes those assertions, arguing that Petitioner has not shown the prior art discloses claim 14's control system "configured to adjust a rotational speed of a fan and a rotational speed of a pump." PO Resp. 42–46.

Patent Owner first points out that neither Shin nor Cheon disclose controlling fan speed. *Id.* at 42–44. We agree, but as discussed, Petitioner asserts that skilled artisans would have recognized the desire to control the speed of a fan once included in a system, because the fan would have an associated noise that would be addressed by controlling its speed, as the references disclose for pump motors. Pet. 61. Patent Owner argues further that it would not have been obvious to use a *single* control system for both the pump motor and fan speeds, and that "the obvious configuration would have been to use two separate control systems (not 'a' system)." PO Resp. 44. Patent Owner relies on the specification's disclosure of controlling the pump and fan speed in coordination, "so that the regulation and feedback mechanisms take into account both the cooling capacity and

'which of the two cooling means, i.e., the pump and the air fan, is generating the most noise.'" *Id.* at 45 (quoting Ex. 1001, 12:4–12). Petitioner challenges Patent Owner's reasoning, as Shin already discloses a control system for its pump motor, thus providing a natural location for the fan-motor control system. Reply 24.[7] Regardless of whether Patent Owner is correct that using two control systems would have been obvious (PO Resp. 46; PO Sur-Reply 21), that does not undermine Petitioner's contention that modifying Shin's control system to also control a fan would have been obvious.

Patent Owner's position appears to read into the claim a requirement for coordination between the pump and fan speed. *See* PO Resp. 45–46 (arguing that Shin lacks a control system where "regulation of fan speed and pump speed can take into account the overall noise generation" as described in the '354 patent). The claims recite no such requirement, and the plain language of "a control system" encompasses separate circuits that collectively control both speeds. Indeed, a "system" will often include multiple components to accomplish a particular function. Moreover, the plain meaning of "a" control system encompasses multiple control systems. *See Baldwin Graphic Systems, Inc. v. Siebert, Inc.*, 512 F.3d 1338, 1342–43 (Fed. Cir. 2008) (holding that generally the word "a" in a patent claim generally carries the meaning of "one or more"). Patent Owner expressly contends that no construction is required to elaborate on the plain meaning

[7] Patent Owner challenges Petitioner's argument as untimely for first appearing in the Reply. PO Sur-Reply 20–21. We do not agree, as the Petition asserted that skilled artisans had reason to configure a system "to adjust the speed of a pump as well as a fan." Pet. 61. That sufficiently asserts a combined control system such that Petitioner's Reply argument appropriately addresses Patent Owner's Response argument.

of the claim terms at issue. PO Resp. 6–7. Thus, although Patent Owner argues that "a control system" cannot encompass "one or more control systems" (*id.* at 45), Patent Owner does not explain how the asserted combination lacks "a control system" other than to rely on the specification's disclosure of coordinated control. Patent Owner does not provide a persuasive basis on which to read that coordinated-control approach into the nonrestrictive claim language. We therefore do not limit the claims to a preferred embodiment. We find that Petitioner's proposed system, in which a fan is used to improve the radiator's cooling and Shin's pump control is modified to control both the pump and fan motors, includes "a control system" as claimed.

We have considered the full record, including Patent Owner's arguments for the independent claims and objective indicia of nonobviousness, and find Petitioner's contentions persuasive for claim 14.

III. CONCLUSION[8]

For the reasons discussed above, we conclude Petitioner has shown by a preponderance of the evidence that the challenged claims are unpatentable. In summary:

---

[8] Should Patent Owner wish to pursue amendment of the challenged claims in a reissue or reexamination proceeding subsequent to the issuance of this decision, we draw Patent Owner's attention to the April 2019 *Notice Regarding Options for Amendments by Patent Owner Through Reissue or Reexamination During a Pending AIA Trial Proceeding*. *See* 84 Fed. Reg. 16,654 (Apr. 22, 2019). If Patent Owner chooses to file a reissue application or a request for reexamination of the challenged patent, we remind Patent Owner of its continuing obligation to notify the Board of any such related matters in updated mandatory notices. *See* 37 C.F.R. § 42.8(a)(3), (b)(2).

Claims	35 U.S.C. §	Reference(s)/Basis	Claims Shown Unpatentable	Claims Not Shown Unpatentable
1, 8, 15	103	Batchelder, Shin	1, 8, 15	
4, 14, 19	103	Batchelder, Shin, Cheon	4, 14, 19	
Overall Outcome			1, 4, 8, 14, 15, 19	

IV. ORDER

Accordingly, it is

ORDERED that claims 1, 4, 8, 14, 15, and 19 of the ’354 patent are unpatentable; and

FURTHER ORDERED that, because this is a Final Written Decision, parties to the proceeding seeking judicial review of the decision must comply with the notice and service requirements of 37 C.F.R. § 90.2.

PETITIONER:

Heath Briggs
GREENBERG TRAURIG, LLP
briggsh@gtlaw.com

PATENT OWNER:

Eric Raciti
Arpita Bhattacharyya
FINNEGAN, HENDERSON, FARABOW, GARRETT & DUNNER, L.L.P
eric.raciti@finnegan.com
arpita.bhattacharyya@finnegan.com