US 20040052663A1

(19) United States

(12) Patent Application Publication

(10) Pub. No.: US 2004/0052663 A1

(43) Pub. Date: Mar. 18, 2004

Laing et al.

(54) DEVICE FOR THE LOCAL COOLING OR HEATING OF AN OBJECT

(75) Inventors: **Oliver Laing**, Stuttgart (DE); **Karsten Laing**, Althutte (DE); **Birger Laing**, Marbach (DE)

Correspondence Address:
FOLEY & LARDNER
P.O. BOX 80278
SAN DIEGO, CA 92138-0278 (US)

(73) Assignee: **Laing Thermotech, Inc.**

(21) Appl. No.: **10/434,307**

(22) Filed: **May 7, 2003**

(30) **Foreign Application Priority Data**

Sep. 13, 2002 (DE) 102 43 026.8

Publication Classification

(51) **Int. Cl.**[7] **F04B 39/06**

(52) **U.S. Cl.** **417/423.8**

(57) **ABSTRACT**

A device for the local cooling or heating of an object by means of a fluid is disclosed. The device comprises a circulation pump for the fluid. A thermal contact element for making thermal contact with the object is integrated in the circulation pump.

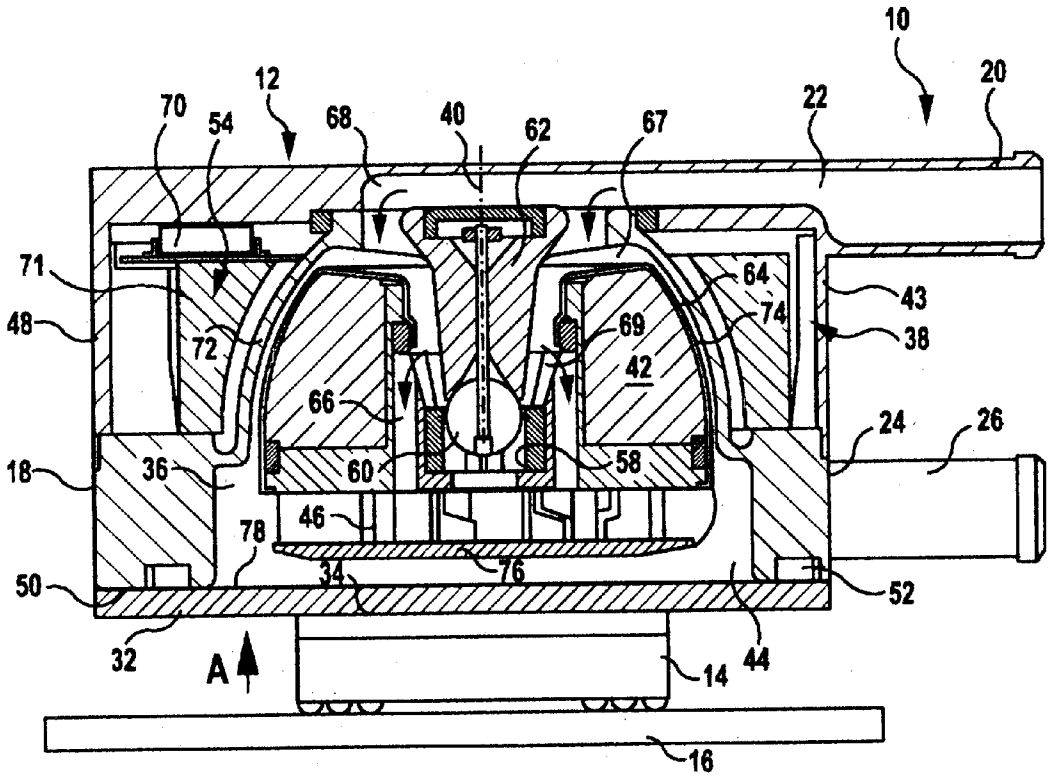

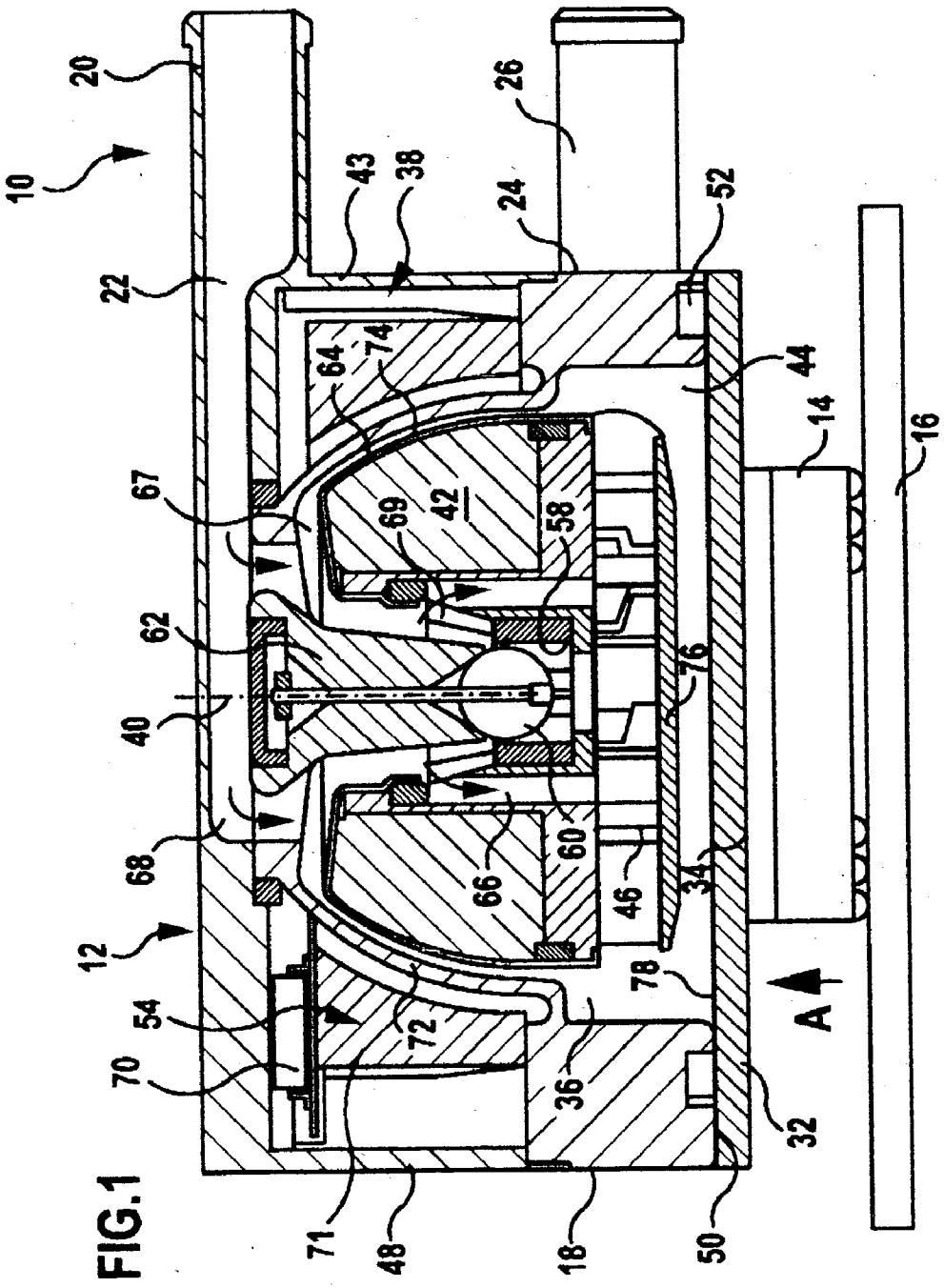
10
20
22
43
38
24
26
52
44
14
16
64
74
67
69
42
58
62
40
76
68
66
60
46
34
12
54
70
72
78
A
36
32
71
48
18
50

FIG.1

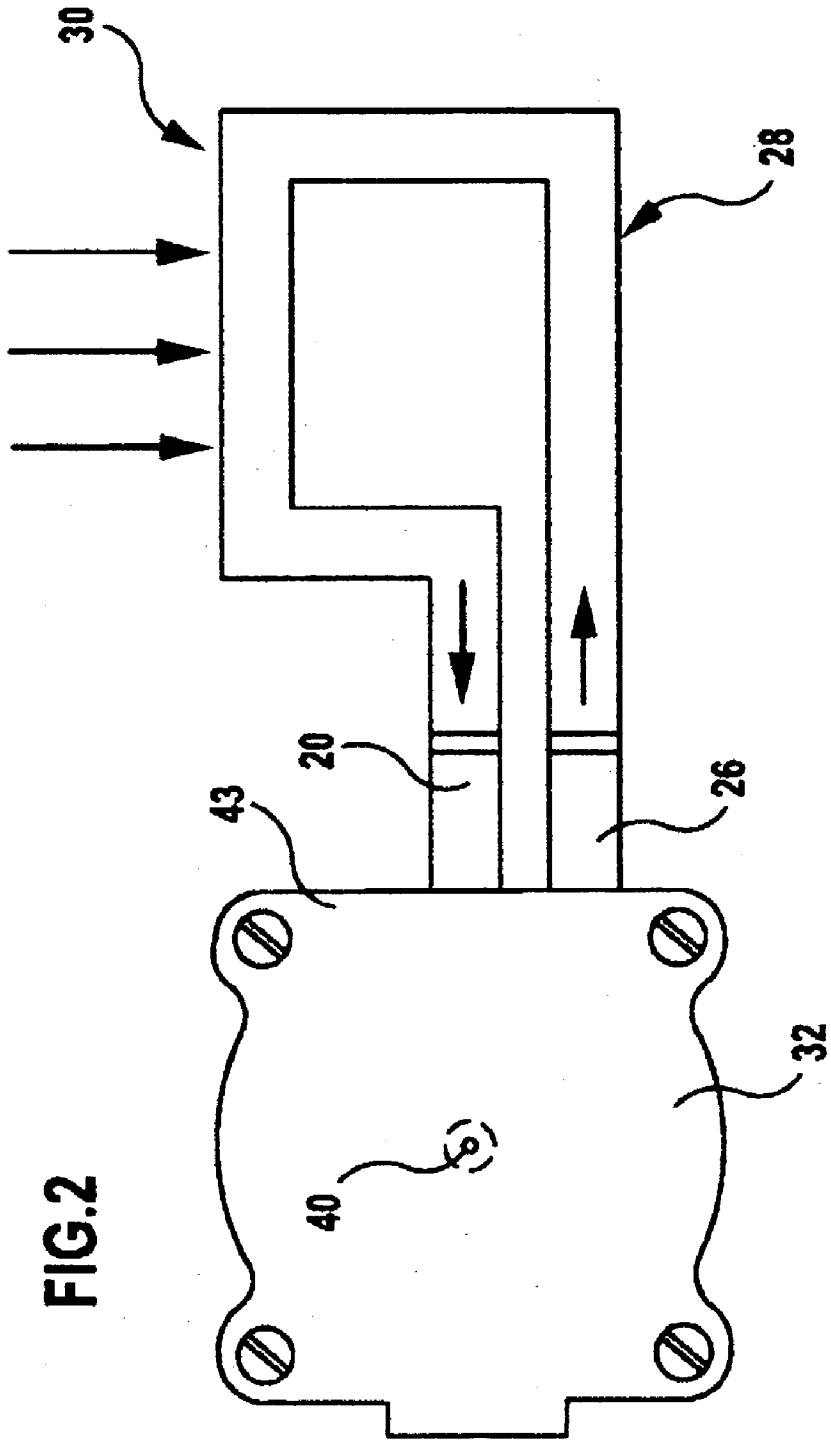

FIG.2

FIG.3

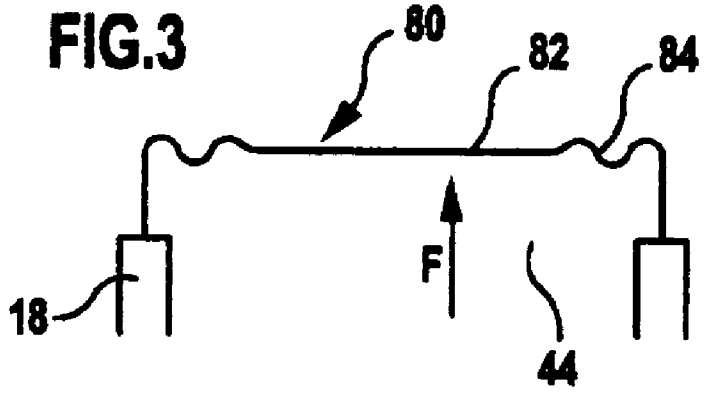

FIG.4

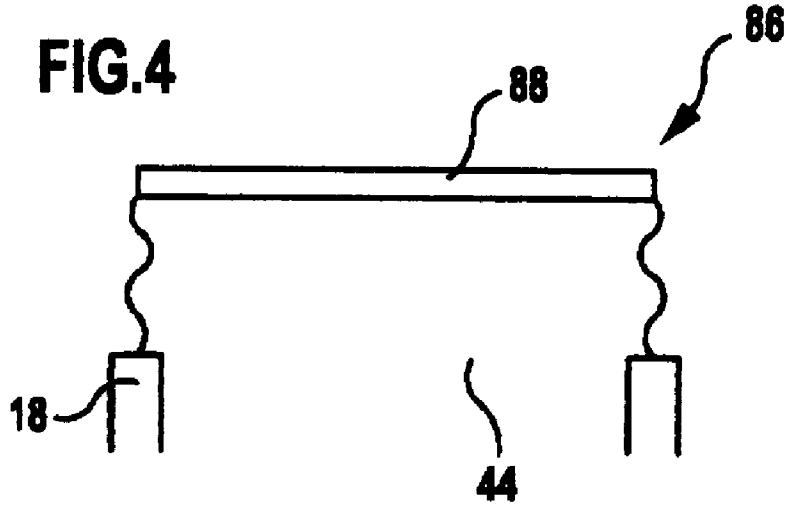

FIG.5

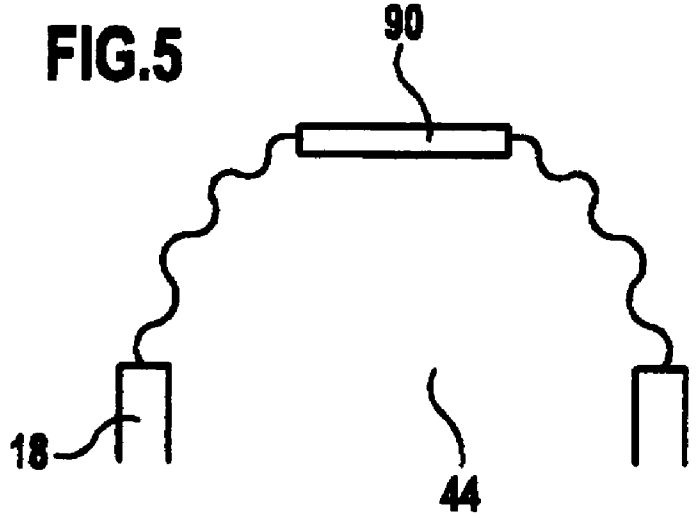

FIG.6

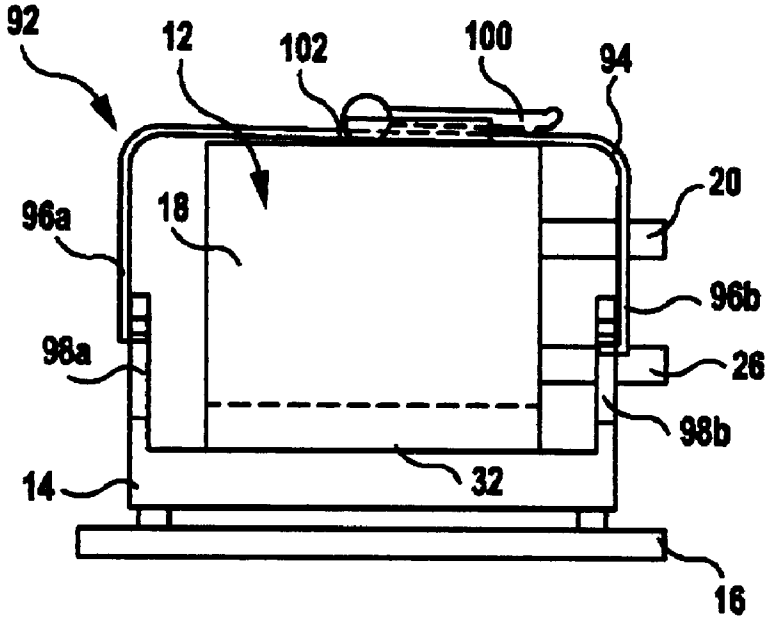
92
12
102
100
94
20
96a
18
96b
98a
26
98b
14
32
16

FIG.7

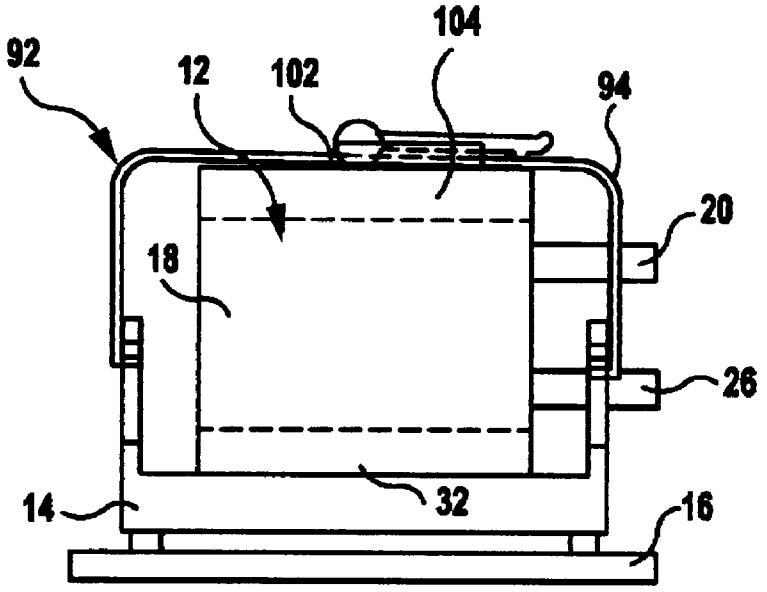
104
92
12
102
94
20
18
26
14
32
16

DEVICE FOR THE LOCAL COOLING OR HEATING OF AN OBJECT

RELATED APPLICATION

[0001] The present disclosure relates to the subject matter disclosed in German application No. 102 43 026.8 of Sep. 13, 2002, which is incorporated herein by reference in its entirety and for all purposes.

FIELD OF THE INVENTION

[0002] The invention relates to a device for the local cooling or heating of an object by means of a liquid, comprising a circulation pump for the liquid.

[0003] Devices of this type are used, for example, for the liquid cooling of microprocessors.

SUMMARY OF THE INVENTION

[0004] In accordance with the invention, a device for the local cooling or heating of an object is provided which is of simple design since a thermal contact element for making thermal contact with the object is integrated in the circulation pump.

[0005] Therefore, according to an embodiment of the invention, a thermal contact element such as a heat sink or heater which is brought into contact with the object is part of the circulation pump. In this way, it is possible to achieve a compact design of a liquid cooling device or heating device with effective cooling or heating of the object with which contact is made.

[0006] Furthermore, it is possible to achieve a high level of efficiency with regard to the cooling or heating, since a fluid is accelerated before it is brought in contact with the thermal contact element, and the flow which is generated makes it possible to achieve good thermal contact with the thermal contact element. It is then possible for heat to be optimally dissipated or optimally supplied. It is also possible to use the circulation pump to establish a flow pattern which is optimal for the removal (dissipation) of heat or supply of heat.

[0007] By suitably shaping the thermal contact element, in particular such that it is matched to a contact surface of the object, it is possible to achieve a good cooling function or heating function in combination with minimized dimensions.

[0008] In particular, it is advantageous if the thermal contact element is part of a housing of the circulation pump. As a result, the device can be produced in a simple way. Furthermore, with suitable positioning of the circulation pump it is possible to achieve a cooling function or heating function with regard to the object: the circulation pump is positioned with the thermal contact element on the object and is fixed with respect thereto, for example by means of clips or positively locking connections.

[0009] In particular, it is provided that the thermal contact element constitutes a housing cover of the circulation pump, so that the thermal contact element does not form an additional component and the circulation pump and therefore also the device can be produced in a simple way.

[0010] In particular, in this case the thermal contact element is a boundary of a swirl chamber of the circulation pump and confines the swirl chamber at least at one end thereof. In the swirl chamber, a swirl is produced in the liquid, and at an outlet this swirl is converted in a spiral pump housing into pressure for circulation of the liquid. If the thermal contact element confines the swirl chamber, it is possible to achieve optimum thermal coupling between liquid and thermal contact element and therefore in turn to achieve an optimum dissipation of heat from or supply of heat to the object.

[0011] In particular, an impeller (paddle wheel), which is driven, for example, as part of an electric motor and by means of which a swirl can be generated in the liquid, is rotatably arranged in the swirl chamber.

[0012] It is also possible for the circulation pump to have a cover plate, in particular in the form of a covering disk for the paddle wheel. A cover plate usually increases the pump output, while without a cover plate the flow velocity is higher. The use or omission of a cover plate makes it possible to establish the optimum conditions for the specific application.

[0013] It is very particularly advantageous if a throughflow which is generated by means of the impeller is guided past the thermal contact element. By guiding by this flow, it is possible to achieve optimum thermal coupling between circulation pump and the object, so that once again optimum cooling or heating can be achieved.

[0014] If the impeller is arranged facing the thermal contact element, it is possible to establish optimized flow guidance in order to dissipate heat from the thermal contact element or to supply heat to the thermal contact element.

[0015] In a variant of an exemplary embodiment, the thermal contact element is made from a metallic material, such as copper, in order to achieve a high thermal conductivity, in order, in turn, to allow optimum dissipation of heat from an object or optimum supply of heat to an object.

[0016] If the thermal contact element is formed as a plate, which in particular has a constant height, it is possible to avoid heat peaks (hot spots) in the thermal contact element.

[0017] In principle, it is possible for the circulation pump to comprise an electric motor, such as a cylinder motor, a disk motor or an external rotor motor, or for it to be driven by means of a permanent-magnetic coupling.

[0018] However, it is very particularly advantageous if the circulation pump is a centrifugal pump with a spherical electric motor. It is then possible to achieve a play-free bearing of a rotor, so that firstly a long service life and therefore a high reliability of the circulation pump are ensured. Secondly, with a substantially spherical bearing, the noise produced is minimized, so that there is reduced operating noise. Furthermore, the overall height (parallel to the axis of rotation of the rotor) can be minimized in a centrifugal pump.

[0019] In particular, a substantially spherical bearing for a rotor of the circulation pump is provided, in order to obtain a play-free bearing while minimizing the overall height.

[0020] Furthermore, it is expedient if the circulation pump comprises an electric motor having a stator and a rotor,

between which a substantially spherical air gap is formed. A centrifugal pump having an electric motor of this type is disclosed by U.S. Pat. No. 4,728,268 and DE 35 38 504 C2, to which reference is hereby expressly made.

[0021] Furthermore, it is expedient if there is coaxial flow through the circulation pump at least in the region between an inflow region and an outflow region, in order in this way to obtain optimum distribution of the cooling or heating liquid to the thermal contact element.

[0022] To minimize the dimensions of the device according to the invention, a feed line for liquid medium is advantageously connected to a housing of the circulation pump transversely with respect to an axis of rotation of a rotor of the circulation pump, and/or a discharge line for liquid medium is advantageously connected to a housing of the circulation pump transversely with respect to an axis of rotation of a rotor of the circulation pump. In this context, in particular the feed line and/or discharge line is/are connected to the housing at right angles with respect to the axis of rotation. As a result, liquid medium can be supplied or discharged laterally, so that the overall height of the device is not increased.

[0023] If a discharge line for discharging liquid medium from the circulation pump and a feed line for feeding liquid medium to the circulation pump are connected to the same side of a housing of the circulation pump, it is also possible to minimize the lateral dimensions of the device and in particular the space required to form a loop for the liquid medium.

[0024] The thermal contact element is advantageously arranged on the pressure side of the circulation pump (and not on the suction side), in order in this way to obtain optimum flow guidance and in particular to be able to apply a flow with a high degree of turbulence to the thermal contact element, in order in turn to achieve optimum thermal coupling.

[0025] To increase the thermal contact surface area of the liquid in the thermal contact element, it is possible for the thermal contact element to have fins on its inner side. These may, for example, be circular or spiral walls.

[0026] In a variant of an embodiment, the fins are formed in such a way as to promote turbulence, in order in this way to further improve the thermal coupling.

[0027] In a variant of an embodiment, it is provided that in an air gap between a stator and a rotor, blades are arranged on the rotor, in order in particular to generate additional swirl in the liquid. The blades are disposed in such a way that the spherical geometry is substantially retained.

[0028] It is advantageous for a swirl chamber of the circulation pump to have a variable volume and in particular for a confining element of the swirl chamber to be able to move relative to the remainder of the housing. In this way, it is possible to provide an expansion volume for the liquid without having to provide separate expansion means. (The liquid expands when heated.) Furthermore, in this way it is possible to exert an initial pressure in order in particular to prevent air from entering into the system.

[0029] In particular, it is provided that the circulation pump has a housing part which is formed flexibly and/or is movable, and in particular is disposed movably on the housing, in such a manner that it is possible to exert a positive pressure on the system. In this way, it is possible to prevent air from entering into the system. By way of example, the housing part may be a flexible plate, a flexible diaphragm or a bellows.

[0030] Furthermore, it is expedient if the circulation pump has a housing part which is formed flexibly and/or is movable in such a manner that it is possible to provide an expansion volume for the liquid, so that there is no need to provide any separate expansion vessels in a liquid circuit.

[0031] It is possible for the flexible and/or movable housing part to be arranged on the opposite side of the housing from the contact element, and in particular to be arranged on a suction side of the housing. The corresponding housing part is in this case arranged substantially parallel to a surface of the object which is to be cooled or heated and in particular is oriented parallel to the contact element. However, the flexible and/or movable housing part may also be formed by the contact element itself.

[0032] The thermal contact element is then of flexible form and/or is mounted movably on a housing of the circulation pump. Then, by way of example, the thermal contact element is formed as a flexible plate which, however, still has sufficient inherent rigidity. In this way, it is possible to provide an expansion volume for the liquid after heating and also to exert a positive pressure on the system.

[0033] It is also possible for the thermal contact element to be a thin diaphragm which positions itself against the object or is surrounded by a bellows.

[0034] In particular, it is provided that a positive pressure can be exerted on the system by means of a fixing device for fixing the circulation pump to the object. A fixing device of this type can be used to fix the circulation pump with the contact element on or with respect to the object which is to be cooled or heated. This can be achieved by exerting a corresponding holding force. This holding force can also be used to exert the positive pressure, it being possible for the force to act directly on the flexible and/or movable housing part or for this force to be imparted via the holding force.

[0035] In particular, it is provided that the circulation pump is held with respect to the object by means of one or more clips. In this way, it is possible to achieve simple fixing of the circulation pump and therefore of the device for local cooling or heating with respect to the object.

[0036] The following description of preferred embodiments, in combination with the drawing, serves to provide a more detailed explanation of the invention.

BRIEF DESCRIPTION OF THE DRAWINGS

[0037] **FIG. 1** shows a partially cutaway view of an exemplary embodiment of a device according to the invention for the local cooling or heating of an object;

[0038] **FIG. 2** shows a plan view in the direction A of the device shown in **FIG. 1**;

[0039] **FIG. 3** shows a schematic illustration of an exemplary embodiment of a thermal contact element;

[0040] **FIG. 4** shows a further exemplary embodiment of a thermal contact element;

[0041] **FIG. 5** shows a further exemplary embodiment of a thermal contact element;

[0042] **FIG. 6** shows a schematic view of a fixing device for fixing a circulation pump to the object; and

[0043] **FIG. 7** shows a variant of the exemplary embodiment illustrated in **FIG. 6**.

DETAILED DESCRIPTION OF THE INVENTION

[0044] An exemplary embodiment of a device according to the invention for the local cooling or heating of an object, which is denoted overall by **10** in **FIG. 1**, comprises a circulation pump **12**, by means of which a fluid, such as water or other liquids, can be guided in a loop (**FIG. 2**) as a heat transfer medium. The heat transfer medium can be used as a cooling medium, in order to cool an object **14**, such as for example an electronic component, such as a processor, which is positioned on a circuit board **16**, for example. The heat transfer medium can also be used for heating an object.

[0045] The circulation pump **12** comprises a housing **18**. A feed line **20** is provided to allow a fluid to enter into the housing **18** by means of an opening **22** leading into a suction side of the circulation pump **12**. A discharge line **26** leads away from the housing **18** via an opening **24** from a pressure side (delivery side) of the circulation pump **12**.

[0046] The housing **18** may be pressed onto the object **14**, for example by means of pressure-exerting clips (not shown).

[0047] If the device is used as a cooling device, a cooling fluid, such as water, is supplied via the feed line **20**, and heated cooling liquid which has been heated as a result of the cooling of the object **14**, is discharged via the discharge line **26**.

[0048] If the device is used as a heating device, a heating fluid is supplied via the feed line **20** and then heats the object **14** and, in the process the heating fluid is cooled. The cooled heating liquid is discharged via the discharge line **26**.

[0049] The discharge line **26** and the feed line **20** are connected to one another outside the housing **18** of the circulation pump **12**, in order to form a loop **28** for the liquid. This loop **28** has a cooling section or heating section **30** which is arranged outside the housing **18** and along which heated cooling liquid can be cooled, for example by means of air cooling, or cooled heating medium can be heated. The cooling section or heating section **30** for this purpose has a suitable surface area to allow effective cooling or heating.

[0050] The thermal contact between the fluid and the object **14** is provided by a thermal contact element **32** which is integrated into the circulation pump **12**. The thermal contact element **32** preferably provides and, in particular, forms a housing cover for the housing **18**. The thermal contact element **32** may be, for example, in the shape of a plate and made from a metallic material.

[0051] To form the thermal contact, the thermal contact element **32** touches the object **14** over the largest possible surface area. It is preferable for that surface of the thermal contact element **32** which faces the object **14** to be at least as large as a contact surface of the object **14**.

[0052] An interior space **36**, in which an electric motor, denoted overall by **38**, is accommodated, is formed in the housing **18** of the circulation pump **12**. The electric motor comprises a rotor **42** which can rotate about an axis of rotation **40**.

[0053] The opening **22** for the feed line **20** and the feed line **20** itself, at least in the region of the opening, and also the opening **24** and the discharge line **26**, at least in the region of this opening **24**, are oriented transversely, and in particular at right angles, with respect to the axis of rotation **40**, in order to be able to maintain a low height of the circulation pump **12** and, therefore, of the device **10** in the direction of the axis of rotation **40**.

[0054] The opening **22** and the opening **24** are preferably arranged on the same (transverse) side **43** of the housing **18** of the circulation pump **12**.

[0055] A swirl chamber **44**, in which a swirl is imparted to liquid which has been supplied via the feed line **20**, using an impeller **46** (paddle wheel) which is connected in a rotationally fixed manner to the rotor **42**, and in which swirling liquid flows, is formed in the interior space **36** of the housing **18**. Pressure conversion takes place in a spiral housing of the circulation pump **12**, in order for the liquid to be pumped through the circuit **28**. The liquid is also guided past the thermal contact element **32** in order to transfer heat.

[0056] The swirl chamber **44** is formed in the interior space **36** between walls **48**, the thermal contact element **32** also being positioned on these walls, facing the object **14**. One or more fluid seals **52**, for example in the form of O-rings, is/are disposed between end faces **50** of these walls **48** and the thermal contact element **32**.

[0057] The electric motor **38** of the circulation pump **12** may, for example, be formed as a cylinder motor, as a disk motor or as an external rotor motor, or alternatively the circulation pump may be driven by means of a permanent-magnetic coupling.

[0058] In the exemplary embodiment shown in **FIG. 1**, the circulation pump **12** is formed as a centrifugal pump with a corresponding electric motor **38** which comprises a stator **54**, which is connected in a rotationally fixed manner to the housing **18**, and a rotatably mounted rotor **42**.

[0059] The rotor **42** is mounted on a convex sliding partner **60** by means of a bearing cap **58**.

[0060] The convex sliding partner **60**, which is substantially formed in particular as a sphere, is seated on a bearing support **62** which extends in the direction of the axis of rotation **40** and in particular is formed concentrically with respect thereto.

[0061] The bearing cap **58** is connected in a rotationally fixed manner to the paddle wheel **46**.

[0062] The bearing cap **58** on the sliding partner **60** forms a substantially spherical bearing. As a result, the dimensions of the circulation pump **12** for the bearing of the rotor **42** can be minimized in the direction of the axis of rotation **40**.

[0063] The rotor **42** of the electric motor **38** has a substantially spherical contour facing the walls **48** of the housing **18** (i.e., a contour which matches a partial region of a spherical surface). A wall **64**, which is, for example, made

from stainless steel, surrounds the rotor **42**. The rotor **42** forms a single unit with the paddle wheel **46**.

[**0064**] A through-flow region **66**, which in particular is arranged concentrically with respect to the axis of rotation **40** and is, for example, approximately annular in cross section (with ribs disposed in the annular space), is formed around the bearing support **62** at the rotor **42**. This through-flow region **66** connects an inflow region **68** of the circulation pump **12**, which in turn is connected to the feed line **20**, to the swirl chamber **44**. The paddle wheel **46** is disposed in the swirl chamber **44**, so that the pressure side of the circulation pump **12** is formed here, while the inflow region **68** represents the suction side. Then, liquid is guided through the circulation pump **12** via the through-flow space **66**, and a swirl is imparted to the liquid which is conducted through by the paddle wheel **46**; the pressure required to pump the liquid through the loop **28** is then produced.

[**0065**] The bearing support **62** is held on the housing **18** by means of radial ribs **67**, it being ensured that the liquid can flow past. The bearing cap **58** is held in a rotationally fixed manner on the rotor **42** by means of radial ribs **69**, it once again being ensured that the liquid can flow past in order to form the through-flow region **66**.

[**0066**] In a variant of an embodiment, a circuit board **70** is positioned in the housing **18**. Coils for the motor and electrical connectors for the coils may be mounted on the circuit board **70**.

[**0067**] The stator **54** is formed by means of coil windings (not shown in the drawing) and magnetic return path elements **71** (yoke elements).

[**0068**] Between the rotor **42** and the stator **54** there is a substantially spherical wall **72** which is made, for example, from a plastics material. Between the rotor **42** and the spherical stator **54** an air gap **74** is defined, which is substantially spherical, i.e. is bounded with respect to the wall **72** by a part of a substantially spherical surface and is likewise bounded with respect to the rotor **42** by part of a substantially spherical surface, the two spherical surfaces lying essentially concentrically with respect to one another. The centers of the spheres lie on the axis of rotation **40** in the center of the sliding partner **60**, via which, once again by means of the bearing cap **58**, the rotor **42** is mounted rotatably in the housing **18** of the circulation pump **12**. The spherical surfaces may be slightly non-concentric with regard to the direction along the axis of rotation **40**.

[**0069**] The paddle wheel **46** is positioned in the swirl chamber **44**, facing the thermal contact element **32**. It is possible for the paddle wheel **46** to be provided with a cover plate **76** facing the thermal contact element **32**.

[**0070**] The device **10** according to the invention for cooling or heating the object **14** functions in the following way:

[**0071**] The housing **18** of the circulation pump **12** is positioned with respect to the object **14** in such a way that the thermal contact element **32** is seated on the contact surface **34** of the object **14**.

[**0072**] By way of example, the object **14** is a microprocessor which is to be cooled using water.

[**0073**] Then, cooling water is guided in the loop **28**, by the circulation pump **12**, past an inner side **78** of the thermal contact element **32**, which is opposite to the contact surface **34** of the object **14**.

[**0074**] In this arrangement, it is possible for this inner side to have fins in order to increase the surface area, these fins being provided in particular with a structure which increases the turbulence. By way of example, circular or spiral walls project toward the paddle wheel **46**. In this way, the flow and in particular the flow of the cooling water past the thermal contact element **32** can be improved and the thermal contact can be improved, so that heat can be optimally dissipated and as a result the object **14** can be optimally cooled.

[**0075**] Cool cooling water is guided into the inflow region **68** via the feed line **20**. It then flows through the through-flow region **66** coaxially with respect to the axis of rotation **40**. A swirl is imparted to this cooling water by the paddle wheel **46**; this is then followed by pressure conversion in the spiral housing, in order to pump the cooling water through the loop **28**.

[**0076**] At the paddle wheel **46**, the cooling water flows spirally outward with respect to the axis of rotation **40** and past the inner side **78** of the thermal contact element **32**. As a result, heat can be dissipated from the thermal contact element **32** and therefore in turn from the object **14** through the cooling water, which correspondingly has taken up this heat.

[**0077**] The cooling section **30** has, by way of example, a heat-transfer surface area which is three times to thirty times larger than the surface area of the inner side **78** of the thermal contact element **32** via which heat can be dissipated to the cooling water.

[**0078**] As an alternative or in addition to the paddle wheel **46**, it is possible for blades to be disposed on the rotor **42** in the air gap **74**, with the spherical symmetry of the arrangement being substantially retained.

[**0079**] According to the invention, a centrifugal pump is provided as circulation pump **12**, with substantially spherical bearing of the rotor **42**. This spherical bearing via the bearing cap **58** and the sliding partner **60** results in a high freedom of play and therefore a long service life of the circulation pump **12** combined, at the same time, with a low level of noise being produced during operation.

[**0080**] Furthermore, it is possible to produce low overall heights in the direction of the axis of rotation **40**, so that it is possible to produce a compact device for example for cooling a microprocessor **14**. The fact that the thermal contact element **32** is integrated in the circulation pump **12**, and in particular the fact that it is designed as a housing cover, means that it is possible to achieve a simple and space-saving structure of the device **10**. In particular, there is no need for an external thermal contact element. The high flow velocities within the housing **18** of the circulation pump **12** can be utilized directly to dissipate heat from the object **14**. The paddle wheel **46** directly faces the thermal contact element **32** and therefore the object **14**.

[**0081**] In the exemplary embodiment shown in **FIG. 1**, the thermal contact element **32** is formed as a rigid plate which is made from a material with a good thermal conductivity, such as copper.

[**0082**] It is also possible for the thermal contact element to be elastic. In an exemplary embodiment which is shown in **FIG. 3, a** flexible plate **80** is provided as thermal contact element **32**, this flexible plate having sufficient inherent

rigidity. In particular, the flexible plate **80** comprises a thermal contact region **82** and a flexibility region **84**, in order to effect optimum contact between the plate **80** and the object **14**.

[**0083**] The flexibility of the thermal contact element **80** means that the volume of the swirl chamber **44** is variable. As a result, it is possible to absorb expansion of the liquid without any load being imposed on the housing **18**. Moreover, in this way it is possible to exert a pressure bias on the system.

[**0084**] It is also possible for the thermal contact element to comprise a membrane which rests against the object **14** or to comprise a flexible membrane.

[**0085**] In an exemplary embodiment which is shown in **FIG. 4**, the thermal contact element comprises bellows **86** with a contact plate **88** for placing onto the object **14**. The fact that the structure is formed as bellows **86** means that the contact plate **88** is moveable relative to the paddle wheel **46**, with the result that, once again, the volume of the swirl chamber **44** can be varied.

[**0086**] It is also possible to provide a thermal contact element **90** in conical form, as shown in **FIG. 5**, which may be a rigid arrangement or a flexible arrangement.

[**0087**] The device **10** according to the invention can also be used for local heating of the object **14** via the thermal contact element **32** and the contact surface **34** of the object **14** if, in a corresponding way, in particular hot water is conducted past the inner side **78** of the thermal contact element **32** as heating liquid.

[**0088**] As shown in **FIG. 6**, the circulation pump **12** is fixed to the object **14** which is to be cooled or heated by means of a fixing device **92**. By way of example, the fixing device **92** comprises one or more holding clips **94**. If there is a plurality of holding clips **94**, these clips are spaced apart from one another.

[**0089**] A holding clip **94** is formed in the shape of a bracket and can be placed onto a side of the housing **18** which is remote from the thermal contact element **32**. Ends **96***a*, **96***b* can be used to fix a holding clip **94** to the object **14**, which has corresponding holding recesses **98***a*, **98***b*. However, these holding recesses may also be arranged on the circuit board **16** or on a base which holds the circuit board **16**.

[**0090**] The holding clip **94** is formed as a clamping bracket with a tensioning lever **100**. When this tensioning lever **100** is open, the circulation pump **12** can be placed onto the object **14** or the circulation pump **12** can be pushed into the space between the holding clip **94** and the object **14**. If the tensioning lever is then closed, which is the position illustrated in **FIG. 6, a** force is exerted in the direction of the object **14** via a bracket region **102**, with the result that, in turn, the housing **18** of the circulation pump **12** is pressed onto the object **14** and as a result the circulation pump **12** with the contact element **32** is fixed on the object **14** or is fixed with respect to this object **14**.

[**0091**] With holding clips **94** of this type, it is possible to achieve rapid fixing of the circulation pump **12** to the object **14** or to rapidly exchange the circulation pump **12**.

[**0092**] If the thermal contact element **32** is not formed as a rigid plate, but rather as a flexible contact element or as a contact element which can move with respect to the housing **18**, as shown in FIGS. **3** to **5** and outlined in this context, it is possible for a positive pressure to be exerted on the system via the fixing device **92** and the holding clips **94**, in order to prevent the penetration of air. In this case, the thermal contact element forms a housing part which is flexible or is mounted movably on the housing **18** and with the aid of which it is possible to exert the positive pressure on the system.

[**0093**] It is also possible, as shown in **FIG. 7**, for a housing part **104** which is not formed by the contact element to be formed flexibly and/or arranged movably on the housing **18**. This corresponding housing part **104** may, for example, be formed as bellows, as a flexible plate or as a flexible membrane, as described above. In this case, in particular this housing part **104** is arranged on the opposite side from the thermal contact element **32**, parallel to the thermal contact element **32**, and in particular parallel to a surface of the object **14**. In the exemplary embodiment shown in **FIG. 7**, this flexible and/or movable housing part is disposed on the suction side of the circulation pump **12**.

[**0094**] In the variant shown in **FIG. 7**, the circulation pump **12** is once again held on the object **14** by means of holding clips **94**. The bracket region **102** in this case acts directly on the flexible and/or movable housing part **104** and therefore exerts a positive pressure on the system in order to prevent air from entering into the system. The fixing device **92** and the holding clips **94** therefore serve both to fix the circulation pump **12** to the object **14** and to exert said positive pressure on the system.

[**0095**] In the exemplary embodiment shown in **FIG. 6**, the positive pressure is exerted indirectly via the holding clips **94** as a result of the housing **18** of the circulation pump **12** being pressed onto the object **14** if the thermal contact element is flexibly and/or movably.

[**0096**] In the embodiment shown in **FIG. 7**, the fixing device **92** exerts a force directly on the flexible and/or movable housing part **104**.

[**0097**] While particular embodiments of the present invention have been disclosed, it is to be understood that various different modifications and combinations are possible and are contemplated within the true spirit and scope of the appended claims. There is no intention, therefore, of limitations to the exact abstract and disclosure herein presented.

1. A device for the local cooling or heating of an object by means of a fluid, comprising:

a circulation pump for the fluid; and

a thermal contact element for making thermal contact with the object, said thermal contact element being integrated in said circulation pump.

2. The device according to claim 1, wherein the thermal contact element is part of a housing of the circulation pump.

3. The device according to claim 1, wherein the thermal contact element provides a housing cover of the circulation pump.

4. The device according to claim 1, wherein the thermal contact element defines a boundary of a swirl chamber of the circulation pump.

5. The device according to claim 4, wherein an impeller is rotatably arranged in the swirl chamber.

6. The device according to claim 5, wherein the circulation pump has a cover plate for the paddle wheel.

7. The device according to claim 5, wherein a throughflow which is generated by means of the impeller is guided past the thermal contact element.

8. The device according to claim 5, wherein the impeller is arranged

9. The device according to claim 1, wherein the thermal contact element is made from a metallic material.

10. The device according to claim 1, wherein the thermal contact element is configured substantially as a plate.

11. The device according to claim 1, wherein the circulation pump is a centrifugal pump.

12. The device according to claim 11, wherein a substantially spherical bearing is provided for a rotor of the circulation pump.

13. The device according to claim 11, wherein the circulation pump comprises an electric motor having a stator and a rotor, between which a substantially spherical air gap is formed.

14. The device according to claim 11, wherein there is coaxial flow through the circulation pump.

15. The device according to claim 1, wherein a feed line for liquid medium is connected to a housing of the circulation pump transversely with respect to an axis of rotation of a rotor of the circulation pump.

16. The device according to claim 1, wherein a discharge line for liquid medium is connected to a housing of the circulation pump transversely with respect to an axis of rotation of a rotor of the circulation pump.

17. The device according to claim 1, wherein a discharge line for discharging liquid medium from the circulation pump and a feed line for feeding liquid medium to the circulation pump are connected to the same side of a housing of the circulation pump.

18. The device according to claim 1, wherein the thermal contact element is arranged on the pressure side of the circulation pump.

19. The device according to claim 1, wherein the thermal contact element has fins on its inner side.

20. The device according to claim 19, wherein the fins are adapted to promote turbulence.

21. The device according to claim 1, wherein blades are arranged on a rotor in an air gap between a stator and the rotor.

22. The device according to claim 1, wherein a swirl chamber of the circulation pump has a variable volume.

23. The device according to claim 1, wherein the circulation pump has a housing part which is flexible and/or is movable in such a manner that a positive pressure can be exerted on the system.

24. The device according to claim 1, wherein the circulation pump has a housing part which is flexible and/or is movable to provide an expansion volume for the liquid.

25. The device according to claim 23, wherein the flexible and/or movable housing part is arranged on an opposite side of the housing from the thermal contact element.

26. The device according to claim 1, wherein the thermal contact element is flexible and/or is mounted movably on a housing of the circulation pump.

27. The device according to claim 23, wherein a pressure bias is exertable on the system by a fixing device for fixing the circulation pump to the object.

28. The device according to claim 1, wherein the circulation pump is held with respect to the object by means of one or more holding clips.

29. The device according to claim 1, wherein said thermal contact includes physical contact with the object.

30. A system for the local cooling or heating of an object, comprising:

a first thermal transfer portion adapted to form a thermal contact with the object;

a second thermal transfer portion for re-conditioning a thermal transfer fluid; and

a circulation pump for circulating the thermal transfer fluid, through a loop including the first and second thermal transfer portions, said circulation pump being integrally formed with at least one of the first and second thermal transfer portions.

31. A method of locally cooling or heating an object, comprising:

drawing a thermal transfer fluid into a circulation pump;

allowing thermal transfer between the object and the thermal transfer fluid through a thermal contact element, said thermal contact element being in thermal contact with the object and being integrally formed with the circulation pump; and

expelling said thermal transfer fluid out of said circulation pump.

* * * * *