UNITED STATES PATENT AND TRADEMARK OFFICE

BEFORE THE PATENT TRIAL AND APPEAL BOARD

COOLER MASTER CO., LTD.

Petitioner,

v.

ASETEK DANMARK A/S,

Patent Owner

Patent No. 8,245,764
Title: COOLING SYSTEM FOR A COMPUTER SYSTEM

IPR Case No.: IPR2023-00668

PETITION FOR *INTER PARTES* REVIEW

TABLE OF CONTENTS

TABLE OF CONTENTS ii

TABLE OF AUTHORITIES v

TABLE OF EXHIBITS vii

I. INITIAL STATEMENT 1

II. IDENTIFICATION OF CHALLENGE UNDER 37 C.F.R. §42.104(B) AND RELIEF REQUESTED 3

III. OVERVIEW OF THE ’764 PATENT 4

A. Priority Date 5

IV. PERSON OF ORDINARY SKILL IN THE ART (“POSITA”) 5

V. CLAIM CONSTRUCTION 6

A. “reservoir” 6
B. “chamber” 6
C. “underside” and “upper side” of the “chassis” 7
D. “below” 7
E. “below … vertically” 7

VI. OVERVIEW OF PRIOR ART 8

A. Duan (Ex-1006) 8
B. Duan-I (Ex-1007) 8
C. Batchelder (Ex-1008) 9
D. Laing (Ex-1008) 9

VII. CLAIM ELEMENT NUMBERING KEY 9

VIII. SPECIFIC GROUNDS FOR PETITION 26

A. GROUNDS 1 & 2: Claims 1-19, 21-27, and 29-30 are rendered obvious over Duan by itself or in view of Duan-I. 26

1. Duan by itself or in view of Duan-I discloses or suggests each limitation of claim 1 and renders it obvious. 27
2. Duan by itself or in view of Duan-I teaches claims 2-9. 49
3. Duan and Duan-I disclose or teach each limitation of claim 10 and render it obvious. 64
4. Duan teaches each limitation of claims 11-14. 70
5. Duan and Duan-I teach each limitation of claim 15 and render it obvious. 72
6. Duan teaches each limitation of claims 16-19, 21-27, and 29. 79
7. Duan by itself or in view of Duan-I teaches each limitation of claim 30. 87

B. GROUNDS 3 and 4: Claim 8 is obvious over Duan in view of Laing or Duan in view of Duan-I and further in view of Laing. 87
C. GROUND 5: Claims 1-30 are rendered obvious over Batchelder in view of Duan. 89

1. Batchelder in view of Duan teaches each limitation of claim 1 and renders it obvious. 89
2. Batchelder teaches claims 2-9. 113
3. Batchelder and Duan teach each limitation of claim 10 and render it obvious. 123
4. Batchelder and Duan teach claims 11-14. 128
5. Batchelder and Duan teach each limitation of claim 15 and render it obvious. 132
6. Batchelder teaches claims 16-29. 136
7. Batchelder teaches claim 30. 143

D. GROUND 6: Claim 8 is obvious over Batchelder in view of Duan and further in view of Laing. 143

IX. SECONDARY CONSIDERATIONS 145

X. PAYMENT OF FEES UNDER 37 C.F.R. §42.15 145

XI. REQUIREMENTS FOR IPR UNDER 37 C.F.R. §42.104 146

A. Grounds for Standing Under 37 C.F.R. §42.104(a) 146

B. Identification of Challenge Under 37 C.F.R. §42.104(b) and Relief Requested....146

XII. MANDATORY NOTICES UNDER 37 C.F.R. §42.8(a)(1) FOR *INTER PARTES* REVIEW....146

A. Real Party in Interest Under 37 C.F.R. §42.8(b)(1)....146
B. Related Matters Under 37 C.F.R. §42.8(b)(2)....148
C. Lead and Backup Counsel Under 37 C.F.R. §42.8(b)(3) and Service Information under 37 C.F.R. §42.8(b)(4)....148

CERTIFICATION OF WORD COUNT UNDER 37 C.F.R. §42.24(D)....150

CERTIFICATE OF SERVICE....151

TABLE OF AUTHORITIES

Page(s)

Federal Cases

ACCO Brands Corp. v. Fellowes, Inc.,
813 F.3d 1361 (Fed. Cir. 2016) 59, 63

Asetek Danmark A/S v. CMI USA, Inc.,
Case No. 4:13-cv-00457-JST (N.D. Cal.) 147

Asetek Danmark A/S v. Shenzhen Apaltek Co.,
No. Case No. 3:22-cv-06179-WHO (N.D. Cal.) 148

Cooler Master Co., Ltd. et al v. Asetek Danmark A/S,
Case No. 5:21-cv-04627-EJD (N.D. Cal.).....147, 148

In re Ethicon, Inc.,
844 F.3d 1344 (Fed. Cir. 2017) 112

KSR Int'l Co. v. Teleflex Inc.,
550 U.S. 398 (2007)..... 26, 27, 88, 89, 92, 144

In re Kubin,
561 F.3d 1351 (Fed. Cir. 2009) 59

In re Mouttet,
686 F.3d 1322 (Fed. Cir. 2012) 27

Tokai Corp. v. Easton Enters., Inc.,
632 F.3d 1358 (Fed. Cir. 2011) 145

Federal Statutes

35 U.S.C. § 102(a) 9

35 U.S.C. § 102(e) 8

35 U.S.C. § 103.....3, 59

35 U.S.C. § 315(c) 146

Regulations

37 C.F.R. § 42.15(a).....145

37 C.F.R. § 42.104(b) 146

37 C.F.R. § 42.122 146

Other Authorities

IPR2020-00522 148
IPR2020-00523 148
IPR2020-00524 148
IPR2021-01195 148
IPR2021-01196 148
U.S. Patent No. 6,019,165 9
U.S. Patent No. 7,325,591 8
U.S. Patent No. 8,245,764 ..... 1, 2, 3, 4, 5, 6, 8, 9, 97, 146, 147
U.S. Patent No. 10,599,196 148
U.S. Patent No. 10,613,601 148

TABLE OF EXHIBITS

Exhibit	Description
1001	U.S. Patent No. 8,245,764 ("'764 patent")
1002	*Inter Partes* Reexamination Certificate, Reexamination Request 95/002,386, U.S. Patent No. 8,245,764
1003	Declaration of Georgios Karamanis, Ph.D. Regarding Invalidity of U.S. Patent No. 8,245,764 ("Karamanis Dec.")
1004	File history of U.S. Patent No. 8,245,764 ("'764-FH")
1005	Defendants' Reply Claim Construction Brief filed on April 12, 2022 in Asetek Danmark A/S v. Shenzhen Apaltek Co., Ltd., Case No. 6:21-cv-501-ADA (W.D. Tex.) (Doc. 61)
1006	U.S. Patent Publication No. 2006/0185830 ("Duan")
1007	U.S. Patent Publication No. 2006/0185829 ("Duan-I")
1008	U.S. Patent No. 6,019,165 to Batchelder ("Batchelder")
1009	Patent Owner's Response, Paper No. 21 in IPR2020-00523 (Nov. 30 2020) ("'354-POR")
1010	U.S. Patent No. 10,078,354 (the "'354 patent")
1011	Final Written Decision in IPR2020-00523, Paper No. 36 (Aug. 19, 2021) ("'354-FWD")
1012	File history of Reexamination Request 95/002,386, U.S. Patent No. 8,245,764 ("'764-Rexam-FH")
1013	Institution Decision, Paper No. 10, IPR2021-01196 (Dec. 28, 2021) ("'196-Institution")
1014	Certified Translation of Japanese Unexamined Patent App. Pub. No. 2002-151638 to Takayuki Shin ("Shin")

Exhibit	Description
1015	U.S. Patent Publication No. 2004/0052663 (“Laing”)

Cooler Master Co., Ltd. ("CMC" or "Petitioner") hereby seeks *inter partes* review of Claims 1-30 ("the Challenged Claims") of U.S. Patent No. 8,245,764. (Ex-1001 (the "'764 patent").)

I. INITIAL STATEMENT

The '764 patent discloses a liquid cooling system used in computer systems. The use of liquid cooling with what is sometimes referred to as an "all-in-one" cooler (*i.e.*, a modular pumping mechanism) to cool semiconductor chips was known to skilled artisans before the '764 patent, as evidenced by the prior art shown and discussed below:

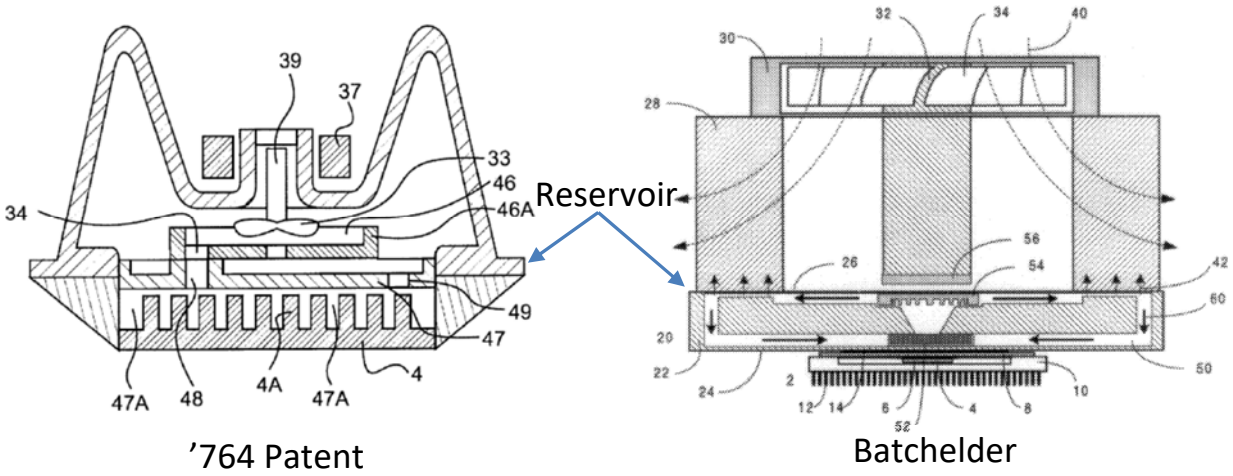

(C*ompare* Ex-1001 at 14 *with* Ex-1008 at 3; Ex-1003,¶35.)

The use of a closed-liquid cooling loop connecting an all-in-one cooler and a radiator was also generally known before the claimed priority date:

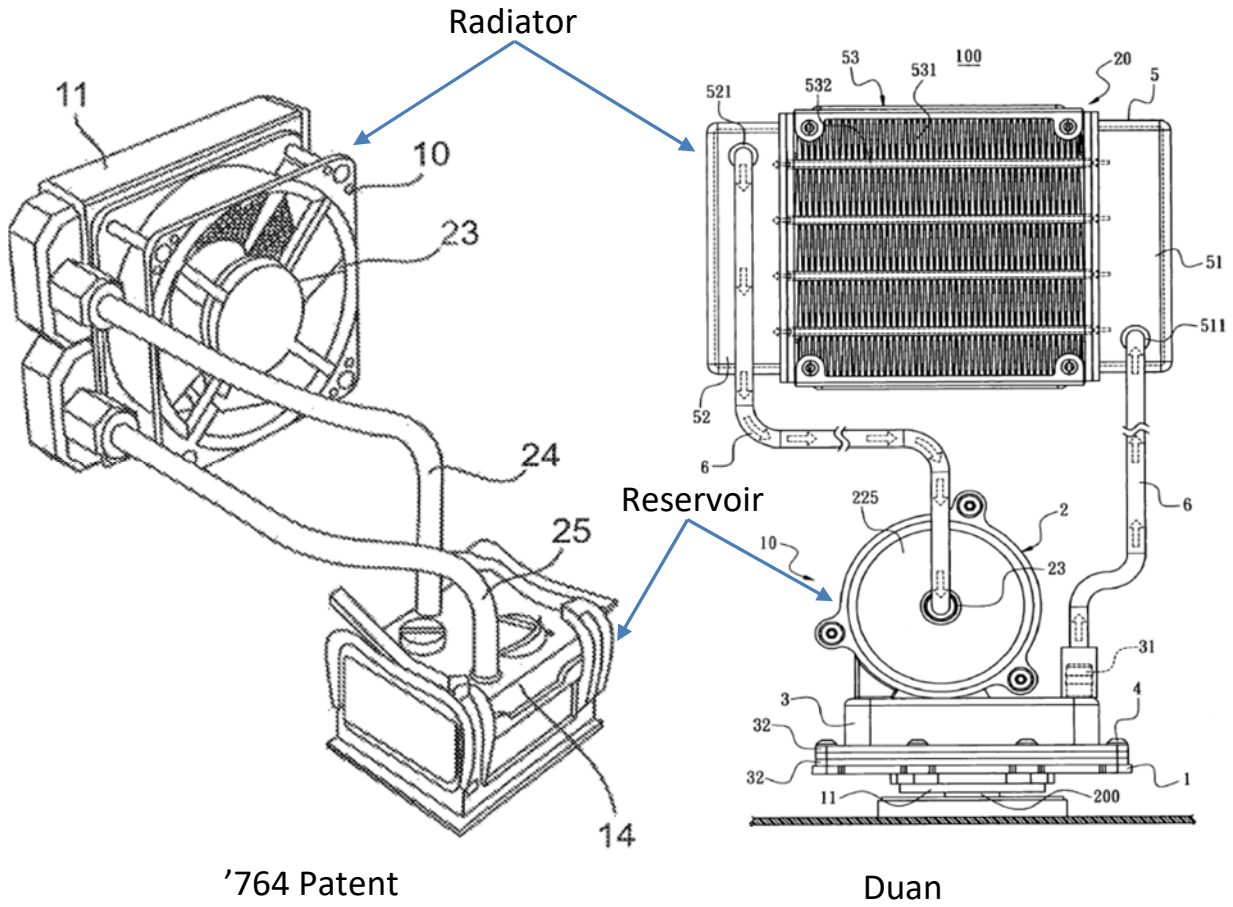

(*Compare* Ex-1001 at 7 *with* Ex-1006 at 7; Ex-1003, ¶37.)

The '764 patent is a continuation of Application No. 11/919,947 ("the '974 application"). (Ex-1001.) The claims of two related patents—which are also continuations of the '974 application and share a number of similarities with the Challenged Claims—have been found unpatentable or subject to an instituted IPR:

U.S. Patent No.	IPR	Status
10,078,355	IPR2020-00522	Claims 1, 2, 5, 6, 8, 10, 11, and 13 found unpatentable

10,599,196	IPR2021-01196	Instituted

II. IDENTIFICATION OF CHALLENGE UNDER 37 C.F.R. §42.104(B) AND RELIEF REQUESTED

Petitioner respectfully requests that the Challenged Claims of the ’764 patent be cancelled based on the following grounds of unpatentability:

Ground of Unpatentability	’764 Patent Claim(s)	Basis for Rejection under 35 U.S.C. §103
Ground 1	1-19, 21-27, 29, 30	Rendered obvious over Duan
Ground 2	1-19, 21-27, 29, 30	Rendered obvious over Duan in view of Duan-I
Ground 3	8	Rendered obvious over Duan in view of Laing
Ground 4	8	Rendered obvious over Duan in view of Duan-I and further in view of Laing
Ground 5	1-30	Rendered obvious over Batchelder in view of Duan
Ground 6	8	Rendered obvious over Batchelder in view of Duan and further in view of Laing

III. OVERVIEW OF THE ’764 PATENT

The ’764 patent discloses a cooling system for computers. (Ex-1001, 1:11-15.) FIG. 7 of the ’764 patent shows reservoir housing 14, which is connected to radiator 11 via tubes 24 and 25. Inside radiator 11, the cooling liquid passes a number of channels for conducting/convecting the heat. (Ex-1001,15:61-16:7.)

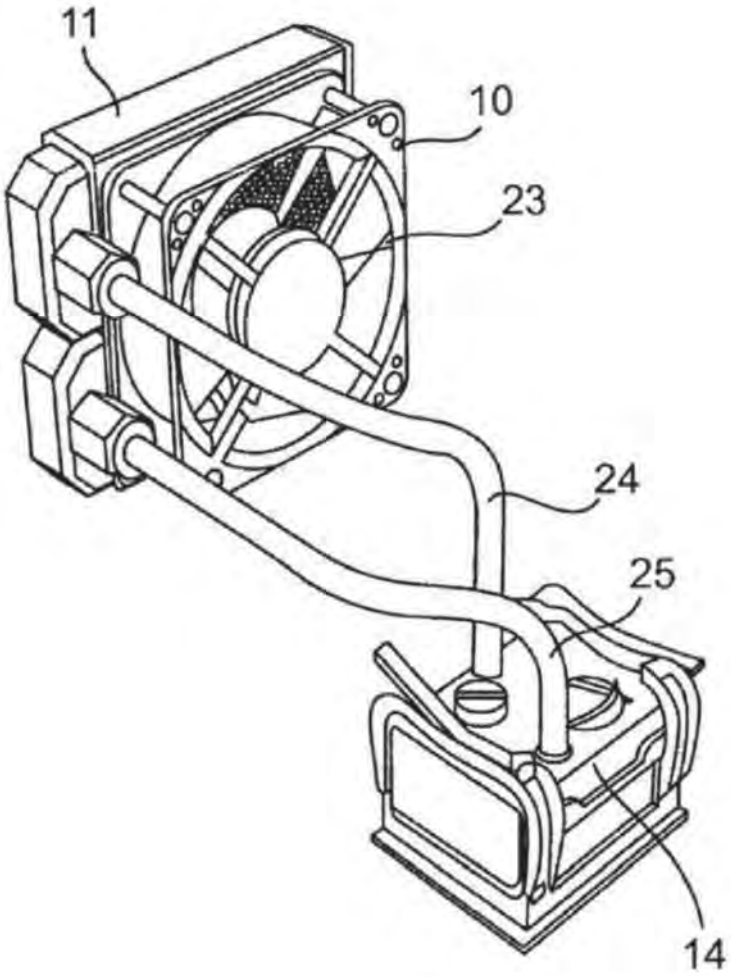

FIG. 7

FIGS. 17 and 20 further depict the "reservoir" disclosed in the '764 patent:

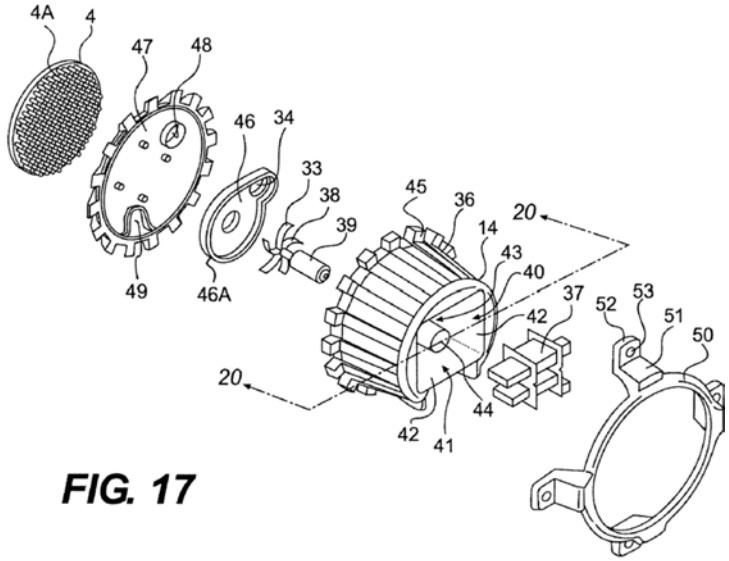

FIG. 17

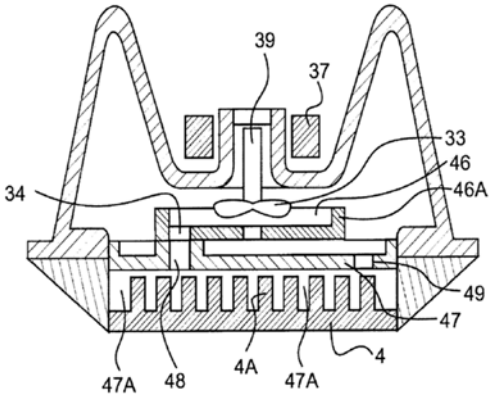

FIG. 20

A. Priority Date

The '764 patent issued on August 21, 2012 from Application No. 13/269,234 filed on October 7, 2011. (Ex-1001.) Claims 19-30 were added during Reexamination No. 95/002,386. (Ex-1002.) The '764 patent claims a priority date of May 6, 2005. Petitioner does not concede that the '764 patent is entitled to such a priority date, and reserves the right to challenge it, but assumes that this date applies for purposes of this Petition.

IV. PERSON OF ORDINARY SKILL IN THE ART ("POSITA")

A POSITA working in the field of liquid cooling systems for computer systems as of the claimed priority date (5/6/2015) would have been knowledgeable regarding liquid cooling systems for computer systems, would have had a Bachelor of Science (B.S.) in electrical or mechanical engineering, or similar advanced post-

graduate education in this area, or would have possessed at least 2-3 years of experience in liquid cooling systems for computer systems or similar systems. This POSITA would have been knowledgeable of the concepts, components, and their functions described as "prior art" in the '764 patent such as, e.g., pumps, radiators, fans, reservoirs, and other techniques of heat dissipation and liquid cooling. (Ex-1001,1:11-47.) In addition, the POSITA would have been knowledgeable about electric motors and their components (e.g., electromagnetic coils, rotors, stators, AC/DC motors, etc.) A person with less education but more relevant practical experience, depending on the nature of that experience and degree of exposure to liquid cooling systems for computer systems, could also qualify as a POSITA in the field of the '764 patent. (Ex-1003, ¶¶13-18.)

V. CLAIM CONSTRUCTION

Petitioner submits that the claim terms below should be construed as follows:

A. "reservoir"

Petitioner and Patent Owner have stipulated to construe the term "reservoir" in the '764 patent to mean "single receptacle defining a fluid flow path." (Ex-1005, 2.) (Ex-1003, ¶19.)

B. "chamber"

The parties also stipulated to construe the term "chamber" in the '764 patent to mean "compartment within the reservoir." (Ex-1005, 2.) (Ex-1003, ¶20.)

C. "underside" and "upper side" of the "chassis"

Claim 1 recites "a double-sided chassis adapted to mount a pump configured to circulate a cooling liquid, the pump comprising a stator and an impeller, the impeller being positioned on the underside of the chassis and *the stator being positioned on the upper side of the chassis and isolated from the cooling liquid*" (emphasis added). A POSITA would have understood the "upper side of the chassis" to mean the side isolated from the cooling liquid and the "underside of the chassis" to mean the other side contacting the cooling liquid. (Ex-1003, ¶21.)

D. "below"

The term "below" by itself appears in the following phrase in claim 1: "a pump chamber including the impeller and formed below the chassis[.]" Because the "impeller" is positioned on the underside of the chassis (*i.e.*, the side contacting the cooling liquid) and included in the "pump chamber," a POSITA would have understood the "pump chamber" to be "formed below the chassis" on the "underside of the chassis" contacting the cooling liquid. (Ex-1003, ¶22.)

E. "below … vertically"

The term "below … vertically" appears in the following phrase in claim 1: "a thermal exchange chamber formed below the pump chamber and vertically spaced apart from the pump chamber[.]" Petitioner and Patent Owner have stipulated that "vertically spaced apart" means "vertically arranged (with reference to each other

and the heat exchanging interface) chambers" (with "chamber" construed as above)." (Ex-1005, 2.) A POSITA would have understood "below…vertically" to mean that the "thermal exchange chamber" is "formed below the pump chamber…vertically" with reference to each other and the heat exchanging interface. (Ex-1003, ¶23.)

VI. OVERVIEW OF PRIOR ART

A. Duan (Ex-1006)

U.S. Patent Publication No. 2006/0185830 ("Duan") published on August 24, 2006 from Application No. 11/060,442, which was filed on February 18, 2005. Duan is prior art under at least pre-AIA 35 U.S.C. §102(e). Duan was not cited during prosecution.

B. Duan-I (Ex-1007)

U.S. Patent Publication No. 2006/0185829 ("Duan-I") published on August 24, 2006 from Application No. 11/060,419, which was filed on February 18, 2005. Duan-I is prior art under at least pre-AIA 35 U.S.C. §102(e). Duan-I was not cited during prosecution of the '764 patent. U.S. Patent No. 7,325,591, which issued from Duan-I, was cited during Reexamination No. 95/002,386, but not in the manner proposed in this Petition (as a secondary reference combined with Duan). (Ex-1012.)

C. Batchelder (Ex-1008)

U.S. Patent No. 6,019,165 ("Batchelder") issued on February 1, 2000. (Ex-1006, [11], [45].) Batchelder is prior art to the '764 patent under at least pre-AIA 35 U.S.C. §102(a). Batchelder was identified in an IDS during prosecution of the '764 patent, but not cited by the Examiner. (Ex-1004.)

D. Laing (Ex-1008)

U.S. Patent Publication No. 2004/0052663 ("Laing") published March 18, 2004 from Application No. 10/434,307, which was filed on May 7, 2003. Laing is prior art to the '764 patent under at least pre-AIA 35 U.S.C. §102(a). Laing was not cited during prosecution of the '764 patent. (Ex-1004.) Laing was cited during Reexamination No. 95/002,386, but not in the manner proposed in this Petition (as a secondary reference combined with Duan or Batchelder). (Ex-1012.)

VII. CLAIM ELEMENT NUMBERING KEY

Because the Challenged Claims have similar claim elements, they are numbered as follows for the element-by-element invalidity analyses in Section VIII.

'764 Claim Limitations		
[1-PRE] 1. A cooling system for a heat-generating component, comprising:	**[10-PRE]** 10. A cooling system for a computer system, comprising:	**[15-PRE]** 15. A cooling system for a heat-generating component, comprising:

’764 Claim Limitations		
[1-a] a double-sided chassis adapted to mount a pump configured to circulate a cooling liquid, the pump comprising a stator and an impeller, the impeller being positioned on the underside of the chassis and the stator being positioned on the upper side of the chassis and isolated from the cooling liquid;	**[10-a]** a centrifugal pump adapted to circulate a cooling liquid, the pump including: an impeller exposed to the cooling liquid; and a stator isolated from the cooling liquid;	**[15-a]** a pump adapted to circulate a cooling liquid, the pump including: an impeller exposed to the cooling liquid; and a stator isolated from the cooling liquid;
[1-b] a reservoir adapted to pass the cooling liquid therethrough, the reservoir including:	**[10-b]** a reservoir configured to be thermally coupled to a heat-generating component of the computer system, the reservoir including:	**[15-b]** a reservoir including

’764 Claim Limitations		
		[15-c] an impeller cover, an intermediate member and
See [1-d]&[1-e]	**[10-c]** a thermal exchange chamber adapted to be positioned in thermal contact with the heat-generating component;	
[1-c] a pump chamber including the impeller and formed below the chassis, the pump chamber being defined by at least an impeller cover having one or more passages for the cooling liquid to pass through;	**[10-d]** a separate pump chamber vertically spaced part from the thermal exchange chamber and coupled with the thermal exchange chamber through one or more passages configured for fluid communication between the pump chamber	**[15-e]** wherein a top wall of the reservoir and the impeller cover define a pump chamber for housing the impeller, and the intermediate member and the heat exchange interface define a thermal exchange chamber, the

’764 Claim Limitations		
[1-d] a thermal exchange chamber formed below the pump chamber and vertically spaced apart from the pump chamber, the pump chamber and the thermal exchange chamber being separate chambers that are fluidly coupled together by the one or more passages; and	and the thermal exchange chamber, and	pump chamber and the thermal exchange chamber being spaced apart from each other in a vertical direction and fluidly coupled together; and
See Claim 6	**[10-e]** wherein at least one of the one or more passages is offset from a center of the impeller.	

’764 Claim Limitations		
See [1-a]	11. The cooling system of claim 10, wherein a top wall of the reservoir physically separates the impeller from the stator.	
[1-e] a heat-exchanging interface, the heat-exchanging interface forming a boundary wall of the thermal exchange chamber, and configured to be placed in thermal contact with a surface of the heat-generating component; and	12. The cooling system of claim 10, wherein the thermal exchange chamber includes a heat-exchange interface configured to be placed in thermal contact with the heat-generating component.	**[15-d]** wherein a first side of the heat-exchanging interface is in contact with a cooling liquid in the thermal exchange chamber and a second side of the heat-exchanging interface opposite the first side is configured to be placed in thermal contact with a surface of the heat-generating component; and

’764 Claim Limitations		
[1-f] a heat radiator fluidly coupled to the reservoir and configured to dissipate heat from the cooling liquid.	13. The cooling system of claim 10, further including a heat radiator fluidly coupled to the reservoir using flexible conduits, wherein the heat radiator is configured to be positioned remote from the reservoir. **See Claim 9**	**[15-f]** a liquid-to-air heat exchanger fluidly coupled to the reservoir using flexible conduits, the heat exchanger being configured to be positioned remote from the reservoir.
2. The cooling system of claim 1, wherein the chassis shields the stator from the cooling liquid in the reservoir. **See [1-a]**		

’764 Claim Limitations		
3. The cooling system of claim 1, wherein the heat-exchanging interface includes a first side and a second side opposite the first side, and wherein the heat-exchanging interface contacts the cooling liquid in the thermal exchange chamber on the first side and the heat-exchanging interface is configured to be in thermal contact with the surface of the heat-generating component on the second side.		

’764 Claim Limitations		
4. The cooling system of claim 3, wherein the first side of the heat-exchanging interface includes features that are adapted to increase heat transfer from the heat-exchanging interface to the cooling liquid in the thermal exchange chamber.		
5. The cooling system of claim 4, wherein the features include at least one of pins or fins.		17. The cooling system of claim 15, wherein the first side of the heat-exchanging interface includes at least one of pins or fins.

’764 Claim Limitations		
6. The cooling system of claim 1, wherein a passage of the one or more passages that fluidly couple the pump chamber and the thermal exchange chamber is offset from a center of the impeller.	14. The cooling system of claim 10, wherein the fluid passage that is offset from the center of the impeller is positioned tangentially to the circumference of the impeller.	
7. The cooling system of claim 1, wherein the impeller includes a plurality of curved blades.		
8. The cooling system of claim 1, wherein the heat-exchanging interface includes one of copper and aluminum.		

’764 Claim Limitations		
9. The cooling system of claim 1, wherein the heat radiator is fluidly coupled to the reservoir using flexible conduits, and the heat radiator is configured to be positioned remote from the reservoir.		

’764 Claim Limitations		
See [1-c]	**See Claim 14**	16. The cooling system of claim 15, wherein the impeller cover includes a first opening radially offset from a center of the impeller and the intermediate member includes a second passage that is aligned with the first opening, the first and the second opening being configured to direct the cooling liquid from the pump chamber into the thermal exchange chamber. **See [15-c] & [15-e]**

’764 Claim Limitations		
See [1-a], [1-b], and Claim 2		18. The cooling system of claim 15, wherein the top wall of the reservoir extends between the stator and the impeller and shields the stator from the cooling liquid in the reservoir.
See [1-d]		19. The cooling system of claim 1, wherein the one or more passages include a passage configured to direct cooling liquid from the pump chamber directly into the thermal exchange chamber.

’764 Claim Limitations		
See [1-e]		21. The cooling system of claim 1, wherein an entire surface of the heat exchanging interface in contact with the cooling liquid in the reservoir forms the boundary wall of the thermal exchange chamber.
		22. The cooling system of claim 1, wherein the reservoir further includes an inlet configured to direct the cooling liquid into the reservoir and an outlet configured to discharge the cooling liquid from the reservoir.

’764 Claim Limitations		
See [1-d]		23. The cooling system of claim 10, wherein the one or more passages include a passage configured to direct cooling liquid from the pump chamber directly into the thermal exchange chamber.
See [1-e]		25. The cooling system of claim 12, wherein an entire surface of the heat- exchange interface in contact with the cooling liquid in the reservoir forms a boundary wall of the thermal exchange chamber.

’764 Claim Limitations		
		26. The cooling system of claim 10, wherein the reservoir further includes an inlet configured to direct the cooling liquid into the reservoir and an outlet configured to discharge the cooling liquid from the reservoir. **See Claim 22**

’764 Claim Limitations		
		27. The cooling system of claim 15, wherein the pump chamber and the thermal exchange chamber are fluidly coupled together by one or more passages, the one or more passages including a passage configured to direct cooling liquid from the pump chamber directly into the thermal exchange chamber. **See Claim 19**

’764 Claim Limitations		
		28. The cooling system of claim 15, wherein the pump chamber and the thermal exchange chamber are fluidly coupled together by a plurality of passages positions within the reservoir that open into the thermal exchange chamber.
See [1-e]		29. The cooling system of claim 15, wherein an entire surface of the heat exchanging interface in contact with the cooling liquid in the reservoir forms a boundary wall of the thermal exchange chamber.

'764 Claim Limitations		
See [1-c]&[1-d]		**[30-a]** 30. The cooling system of claim 15, wherein the pump chamber and thermal exchange chamber are fluidly coupled together by one or more passages, and
		[30-b] the reservoir further includes an inlet configured to direct the cooling liquid into the reservoir and an outlet configured to discharge the cooling liquid from the reservoir. **See Claim 22**

VIII. SPECIFIC GROUNDS FOR PETITION

A. GROUNDS 1 & 2: Claims 1-19, 21-27, and 29-30 are rendered obvious over Duan by itself or in view of Duan-I.

The obviousness inquiry evaluates "whether there was an apparent reason to combine the known elements in the fashion claimed by the patent at issue." *KSR*

Int'l Co. v. Teleflex Inc., 550 U.S. 398, 418, (2007). The analysis is a flexible one, accounting for "the inferences and creative steps that a person of ordinary skill in the art would employ." *Id.* Moreover, "it is well-established that a determination of obviousness based on teachings from multiple references does not require an actual, physical substitution of elements." *In re Mouttet*, 686 F.3d 1322, 1332 (Fed. Cir. 2012). Instead, the relevant question is "what the combined teachings of the references would have suggested to those having ordinary skill in the art." *Id.* at 1333.

Grounds 1 and 2 are related, so they are discussed together.

1. Duan by itself or in view of Duan-I discloses or suggests each limitation of claim 1 and renders it obvious.

[1-PRE]

Duan discloses that "[t]he present invention relates to a cooling plate module, and more particularly to a cooling plate module used for heat emitting device such as a CPU." (Ex-1006, [0002]; *see also id*. at Abstract (disclosing a "cooling plate module" that enhances "heat dissipation efficiency").) Duan teaches the preamble, and, thus, so does Duan in view of Duan-I (Ex-1003, ¶¶46-48.)

[1-a] "a double-sided chassis adapted to mount a pump configured to circulate a cooling liquid, the pump comprising a stator and an impeller, the impeller being positioned on the underside of the chassis and the stator being positioned on the upper side of the chassis and isolated from the cooling liquid;"

Duan by itself or in view of Duan-I teaches [1-a]. Duan teaches a double-

sided chassis (accommodation chamber 21) adapted to mount a pump (liquid driving unit 22) configured to circulate a cooling liquid, the pump comprising a stator (coil stage 221) and an impeller (impeller stage 223):

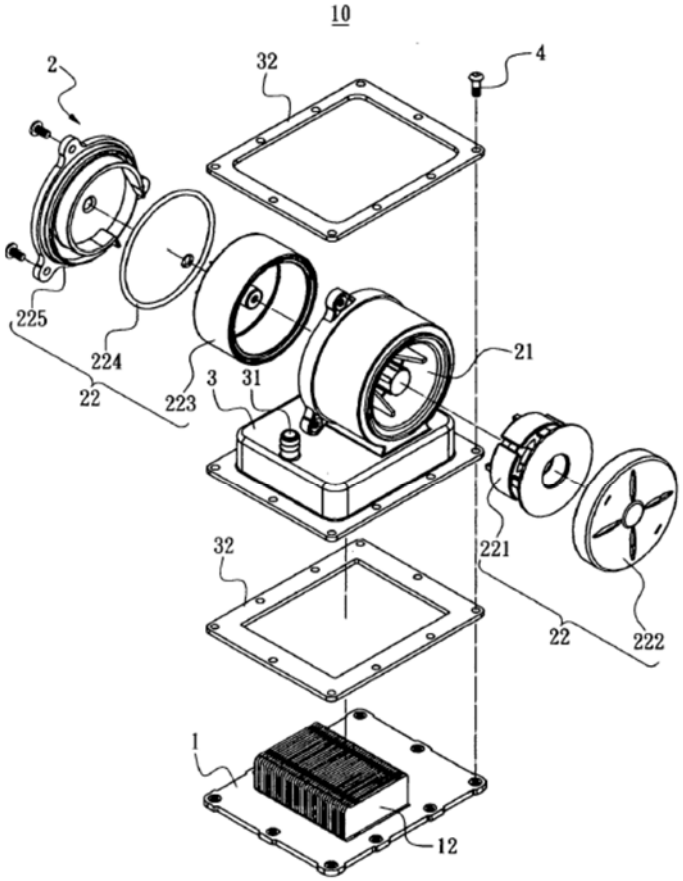

FIG. 2

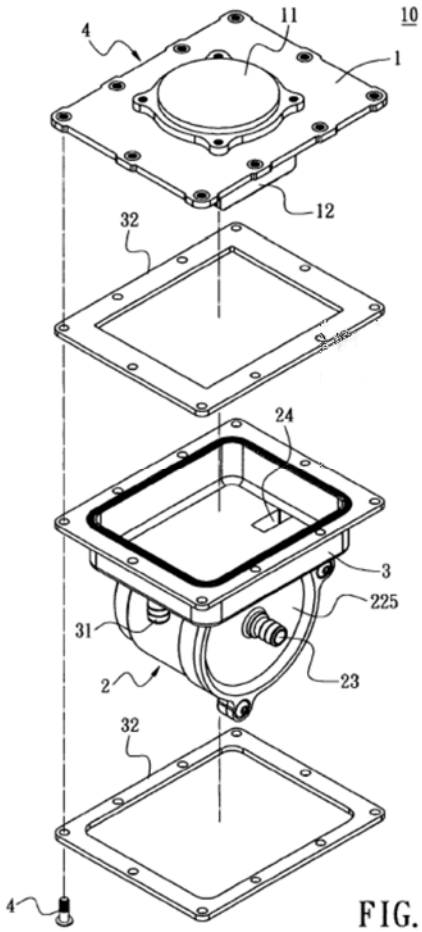

FIG. 4

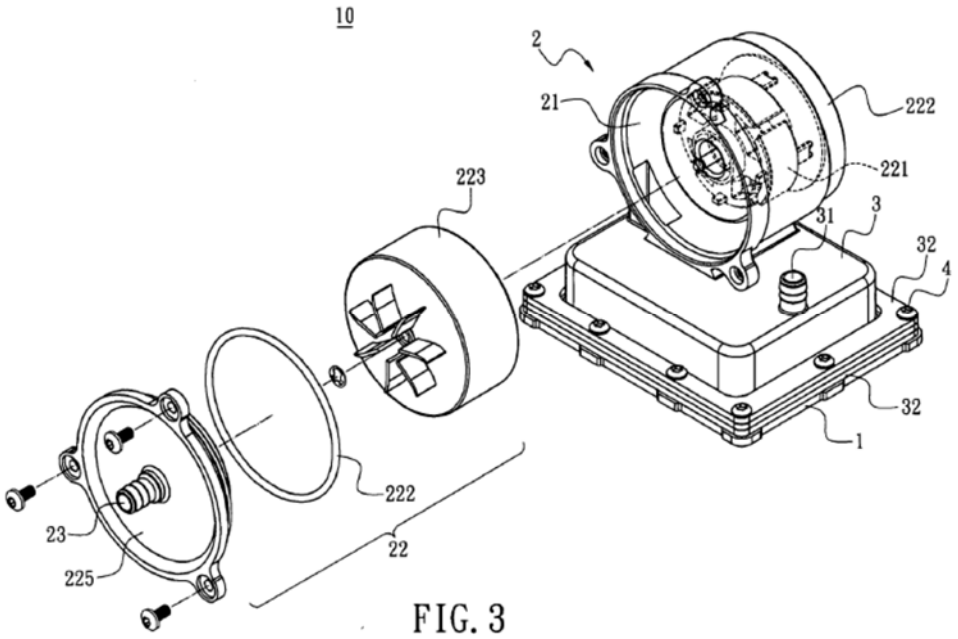

FIG. 3

(Ex-1006, FIGS. 2-4; [0023] ("[T]he liquid driving module 2 comprises an accommodation chamber 21 and a **liquid driving unit 22 located in the accommodation chamber 21** and used to driv[e] the cool liquid. The liquid driving unit 22 comprises a **coil stage 221**…an **impeller stage 223**…[T]he liquid driving module 2 **can be reciprocating pump, centrifugal pump or axial-flow pump**."); Ex-1003, ¶¶50-51.)

Duan also teaches that the impeller (223) is positioned on the underside of the chassis (accommodation chamber 21) in contact the cooling liquid and the stator (221) positioned on the chassis' upper side isolated from the cooling liquid:

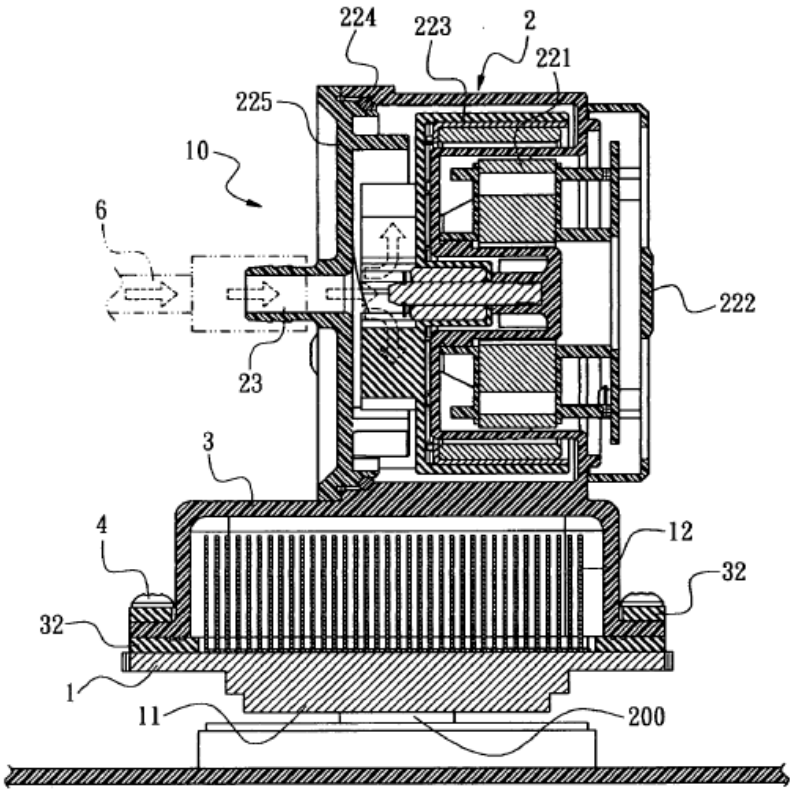

FIG. 7

(Ex-1006, FIG. 7; Ex-1003, ¶52.)

Duan in view of Duan-I also teaches [1-a]. Duan-I teaches a cooling system with the stator (coil stage 21) positioned on the upper side of the chassis (casing 1) isolated from the liquid and the impeller (23) positioned on the underside of the chassis (casing 1) contacting the liquid:

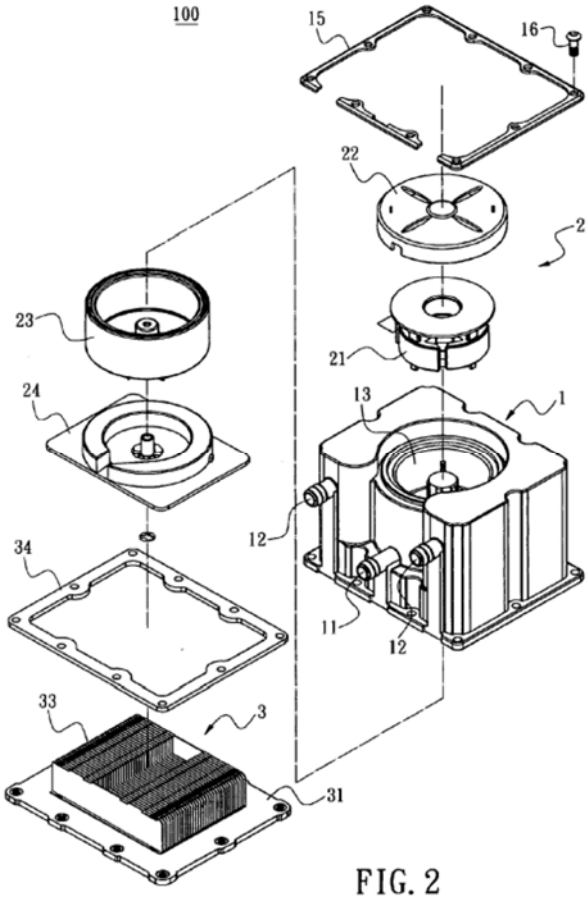

FIG. 2

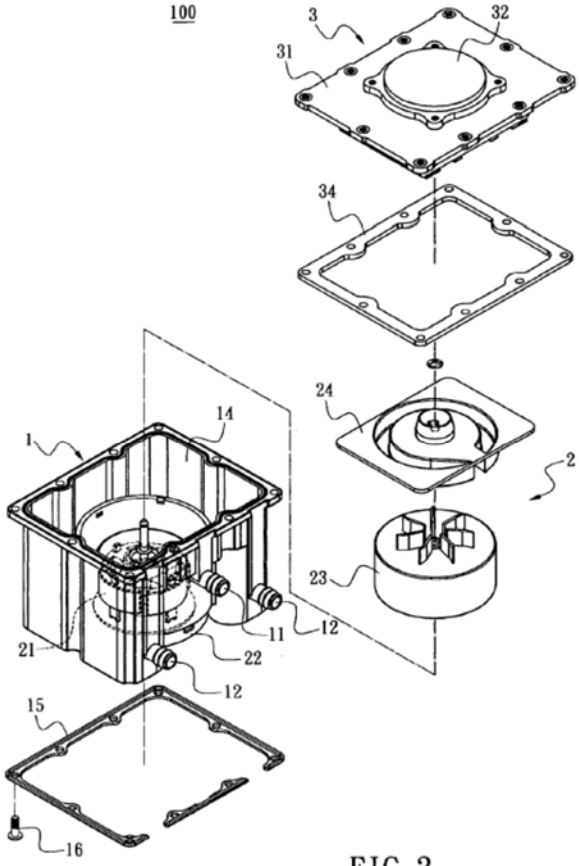

FIG. 3

(Ex-1007, FIGS. 2-3; [0021].) As shown above, Duan's liquid driving unit 2 is oriented in a direction 90º from that of Duan-I's liquid driving unit 22.

A POSITA would have recognized that Duan's liquid driving module 22 is oriented in a way such that the overall device is taller than Duan-I, as shown below:

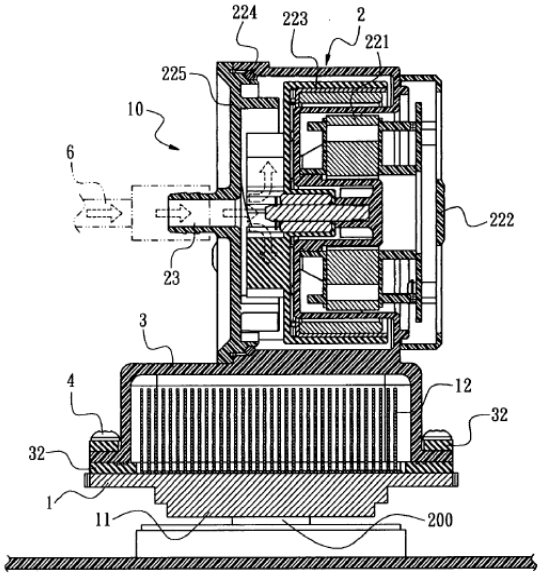

FIG. 7

Duan

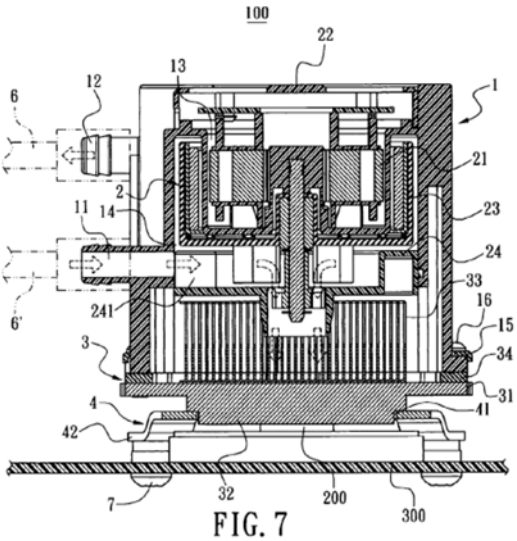

FIG. 7

Duan-I

(Ex-1003, ¶54.)

Given the known "compact trend of computer[s]" recognized by Duan [¶0006], a POSITA would have been motivated to rotate Duan's liquid driving module 2 (pump) counterclockwise by 90 degrees in Figure 7 to reduce the system's overall height, in view of Duan-I. (Ex-1003, ¶55.) Although modifying Duan in this fashion would require some minor reconstruction, doing so would have been well within a POSITA's technical grasp, and would have predictably resulted in a modified system like the one below (double-sided chassis outlined in red):

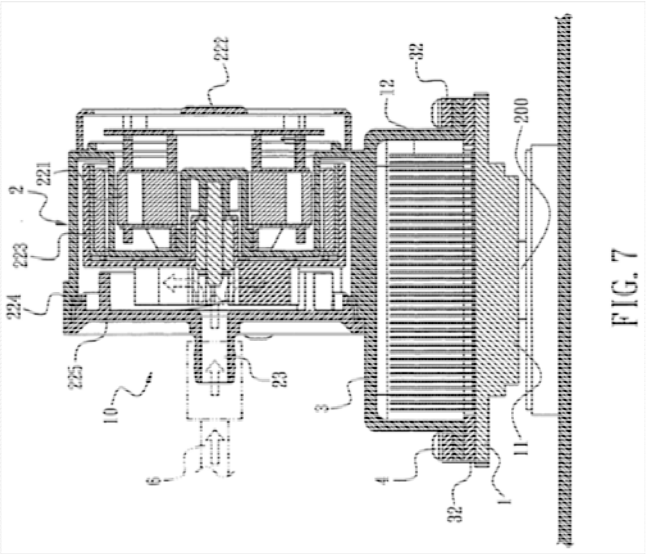

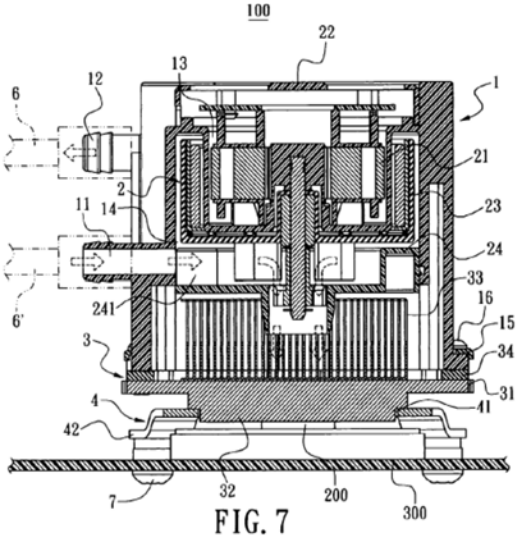

Duan (rotated 90º CCW)

Duan-I

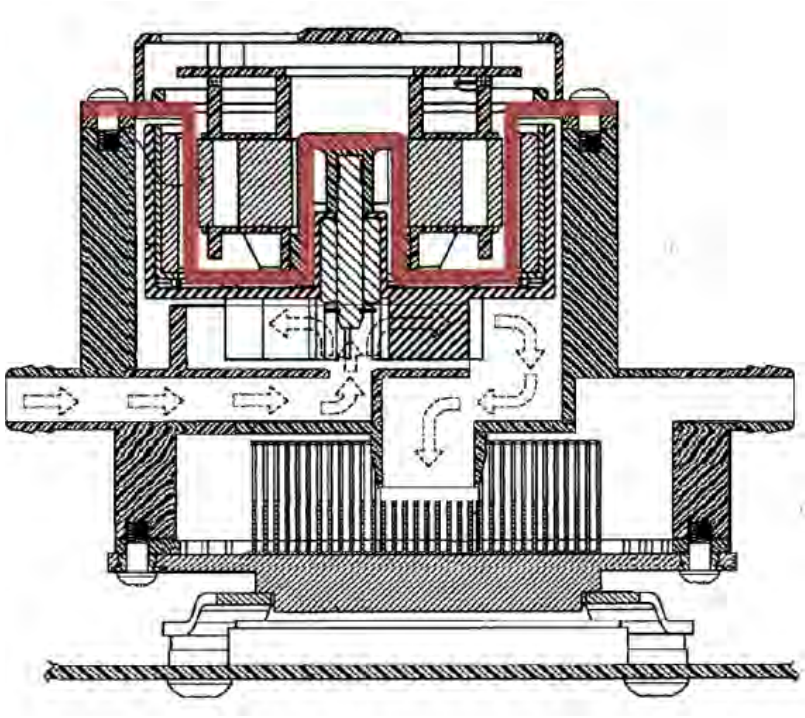

(Ex-1003, ¶56.)

Duan, as modified above in view of Duan-I, teaches a double-sided chassis (accommodation chamber 21) adapted to mount a pump (liquid driving unit 22) configured to circulate a cooling liquid, the pump comprising a stator (coil stage 221) and an impeller (impeller stage 223), the impeller being positioned on the underside of the chassis and the stator (221) being positioned on the upper side of the chassis and isolated from the cooling liquid. (Ex-1003, ¶57.)

[1-b] "a reservoir adapted to pass the cooling liquid therethrough, the reservoir including:"

Duan teaches [1-b] by disclosing a "liquid cooling cyclic mechanism 100…composed of the **cooling plate module 10** and a water tank module 20 connected with the cooling plate module 10 through ducts." (Ex-1006, [0022], FIG. 6.) The structure of the cooling plate module 10 is illustrated below:

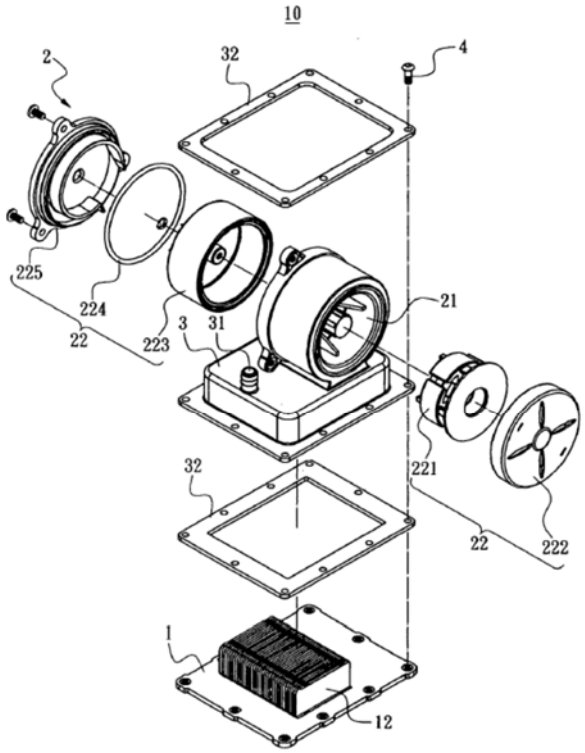

FIG. 2

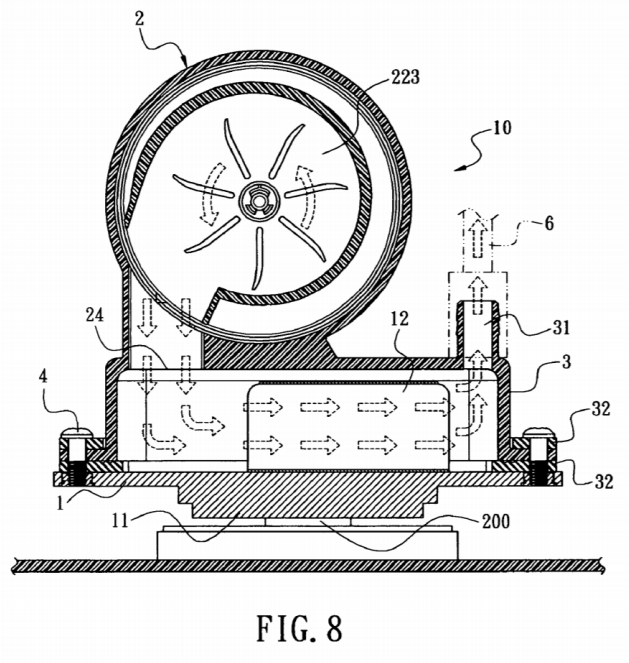

FIG. 8

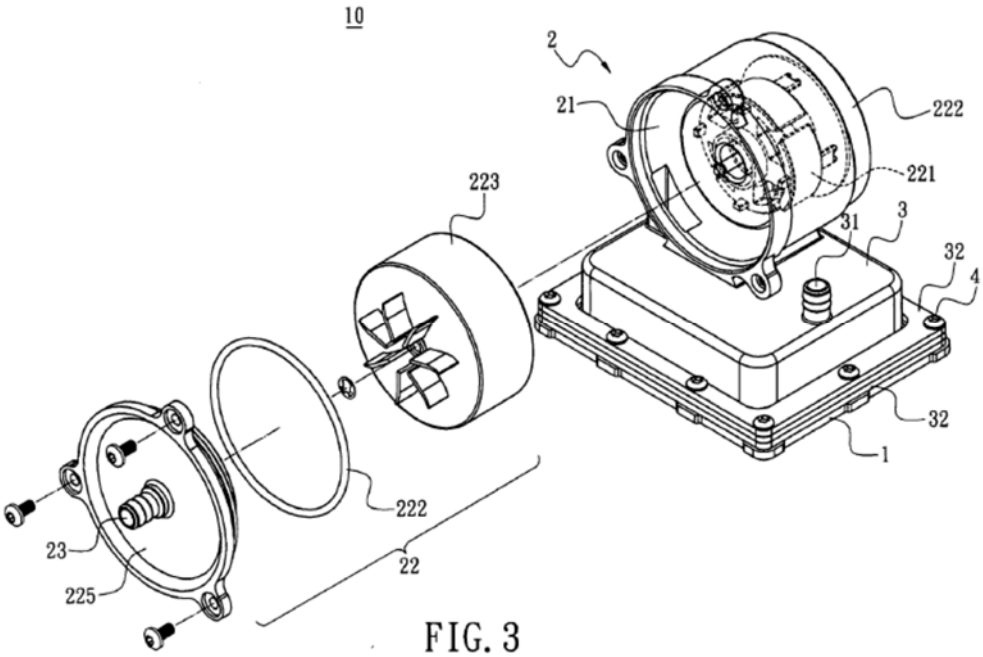

FIG. 3

Cooling plate module 10 includes a reservoir—i.e., a single receptacle defining a fluid flow path—in which the cooling fluid enters accommodation chamber 21 of the module via inlet 23, flows through outlet 24 into the closed space defined by cap 3 and cooling plate 1, and exits at second liquid outlet 31. (Ex-1006, [0023] ("The lower cover 225 comprises a liquid inlet 23 communicated with the accommodation chamber 21. A first liquid outlet 24 is communicated to the bottom of the accommodation chamber 21 and is enclosed by a cap 3. A second liquid outlet 31 is defined on the cap 3. The cooling plate 1 is assembled with the cap 3 to define a closed space therein…."); [0024] ("[S]ealing pads 32 are provided between the cap 3 and the cooling plate 1 and provided atop the cap 3…The cooling plate 1 is fixed to bottom of the cap 3…."); [0025]; [0027] ("[T]he cool liquid in the water tank 20 is conveyed to the accommodation chamber 21 through…the liquid inlet 23 of the cooling plate module 10 and driven by the liquid driving unit 22. The cool liquid then flows to the cap 3 through the first liquid outlet 24 for heat dissipating the heat-dissipating plates 12 in the cap 3…The hot liquid then flows to the liquid entrance region 51 of the water tank 20 through the second liquid outlet 31….").)

Accordingly, Duan teaches a reservoir (accommodation chamber 21, cap 3, and cooling plate 1) adapted to pass the cooling liquid therethrough. (Ex-1003, ¶¶60-62.)

When Duan is modified in view of Duan-I by rotating the pump (*see* limitation

[1-a] above), the modified system also satisfies this limitation, as shown below (reservoir outlined in orange):

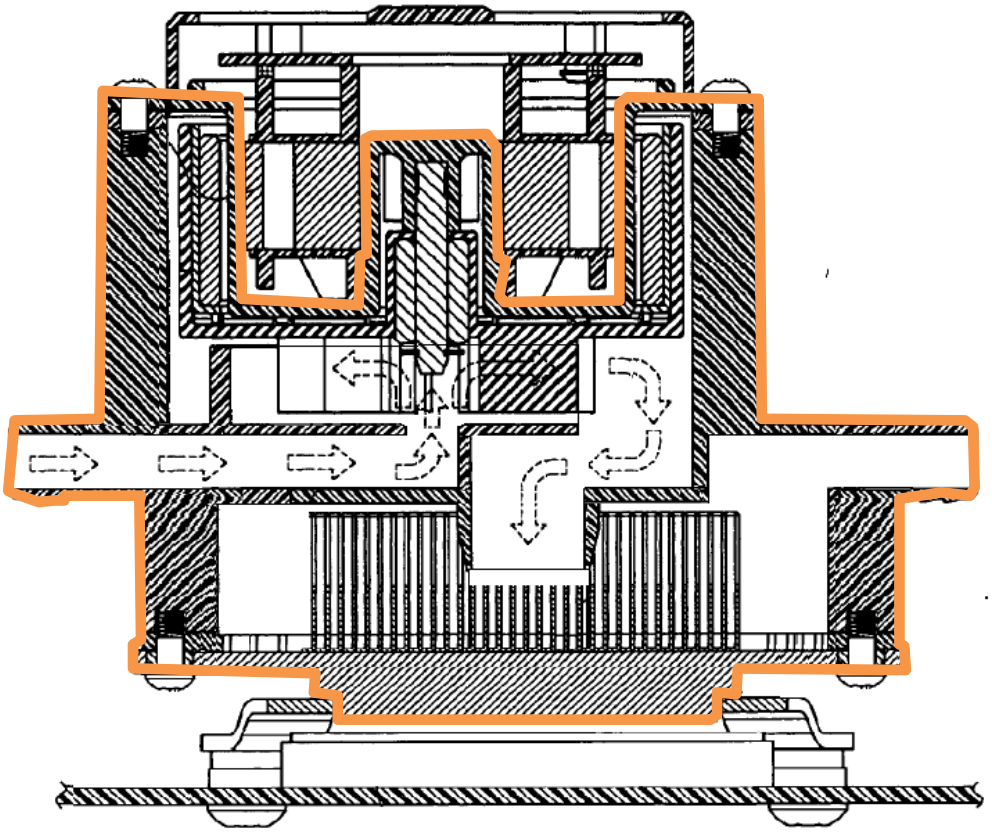

(Ex-1003, ¶63.)

[1-c] "a pump chamber including the impeller and formed below the chassis, the pump chamber being defined by at least an impeller cover having one or more passages for the cooling liquid to pass through"

Duan teaches [1-c].

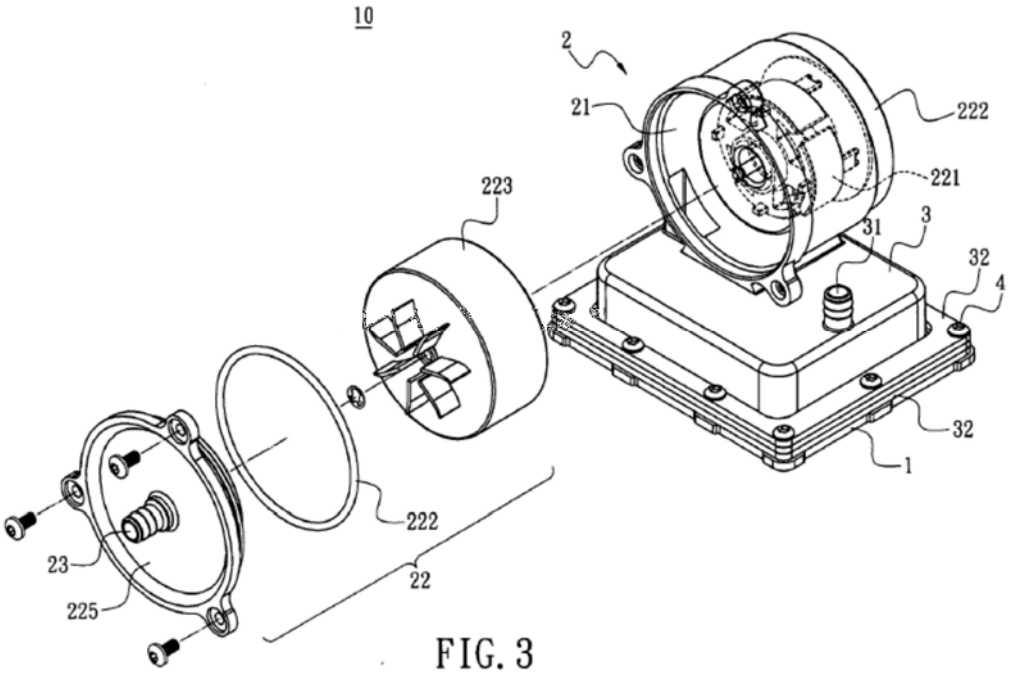

FIG. 3

(Ex-1006, FIG. 3.) As shown, Duan discloses a pump chamber (at the near end of accommodation chamber 21 in FIG. 3) including the impeller (223), the pump chamber being defined by at least an impeller cover (the cylindrical wall surrounding accommodation chamber 21 plus lower cover 225 that together cover the impeller stage 223) having one or more passages (liquid inlet 23) for the cooling liquid to pass through. (Ex-1003, ¶65.) Duan's impeller cover (lower cover 225) has another passage (colored orange below) for the cooling liquid to pass through:

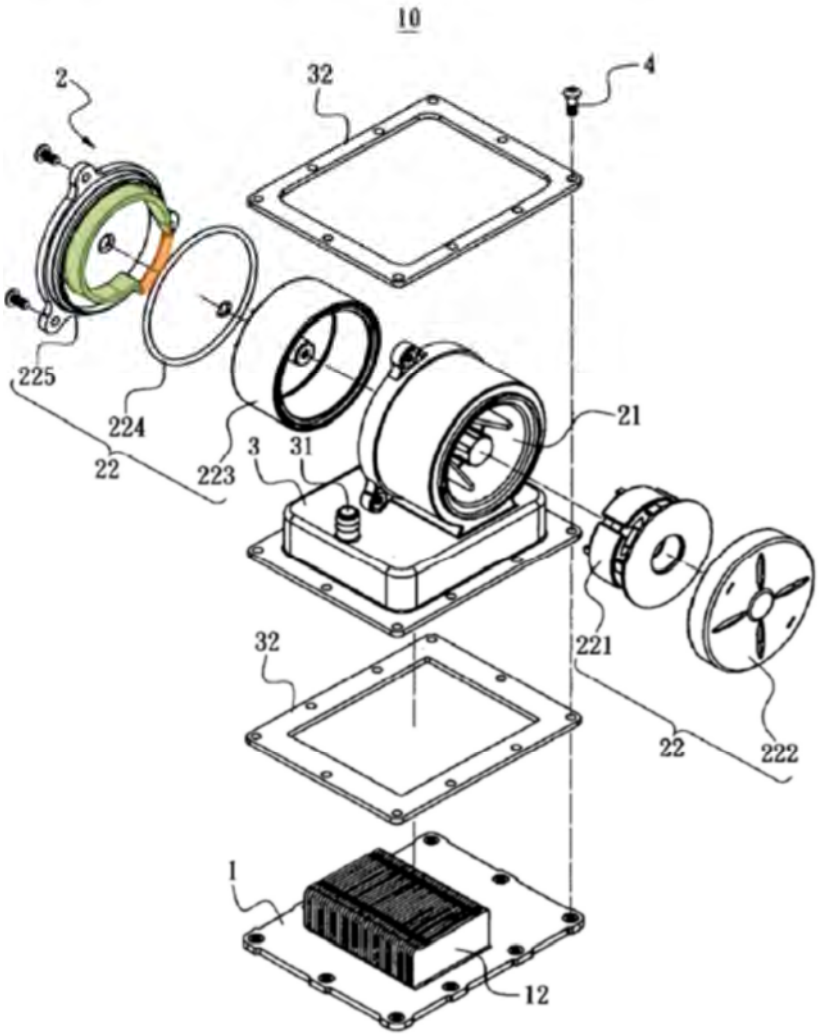

FIG. 2

(Ex-1006, FIG. 2 (annotated).)

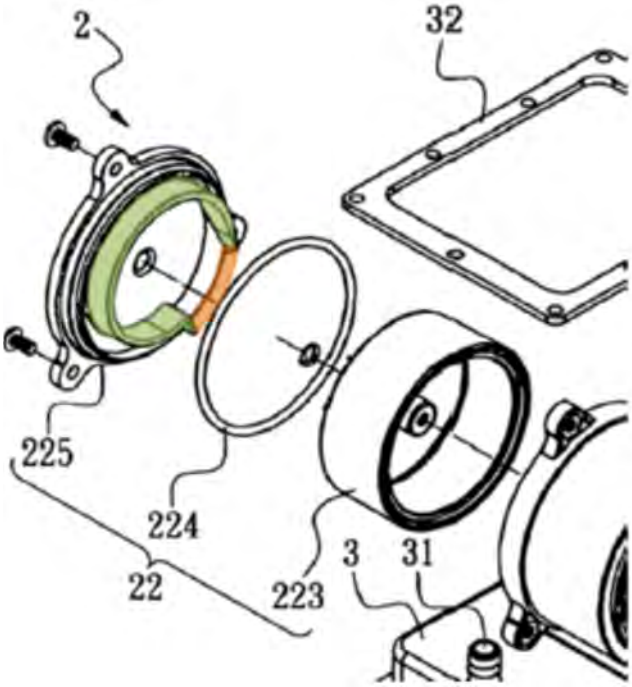

(Ex-1006, FIG. 2 (excerpt; annotated).)

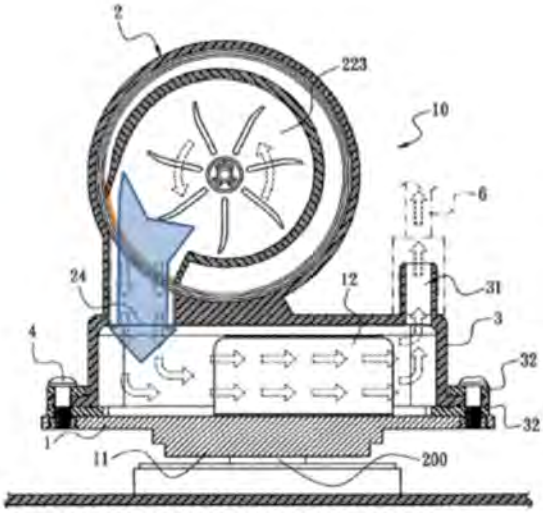

FIG. 8

(Ex-1006, FIG. 8 (annotated); Ex-1003, ¶66.)

When Duan is modified in view of Duan-I by rotating the pump (*see* limitation [1-a] above), this limitation is also satisfied, as shown below (with the

chassis in red, impeller cover in green, and impeller within the pump chamber — i.e., the space surrounded by the impeller cover (green) and under the chassis (red)):

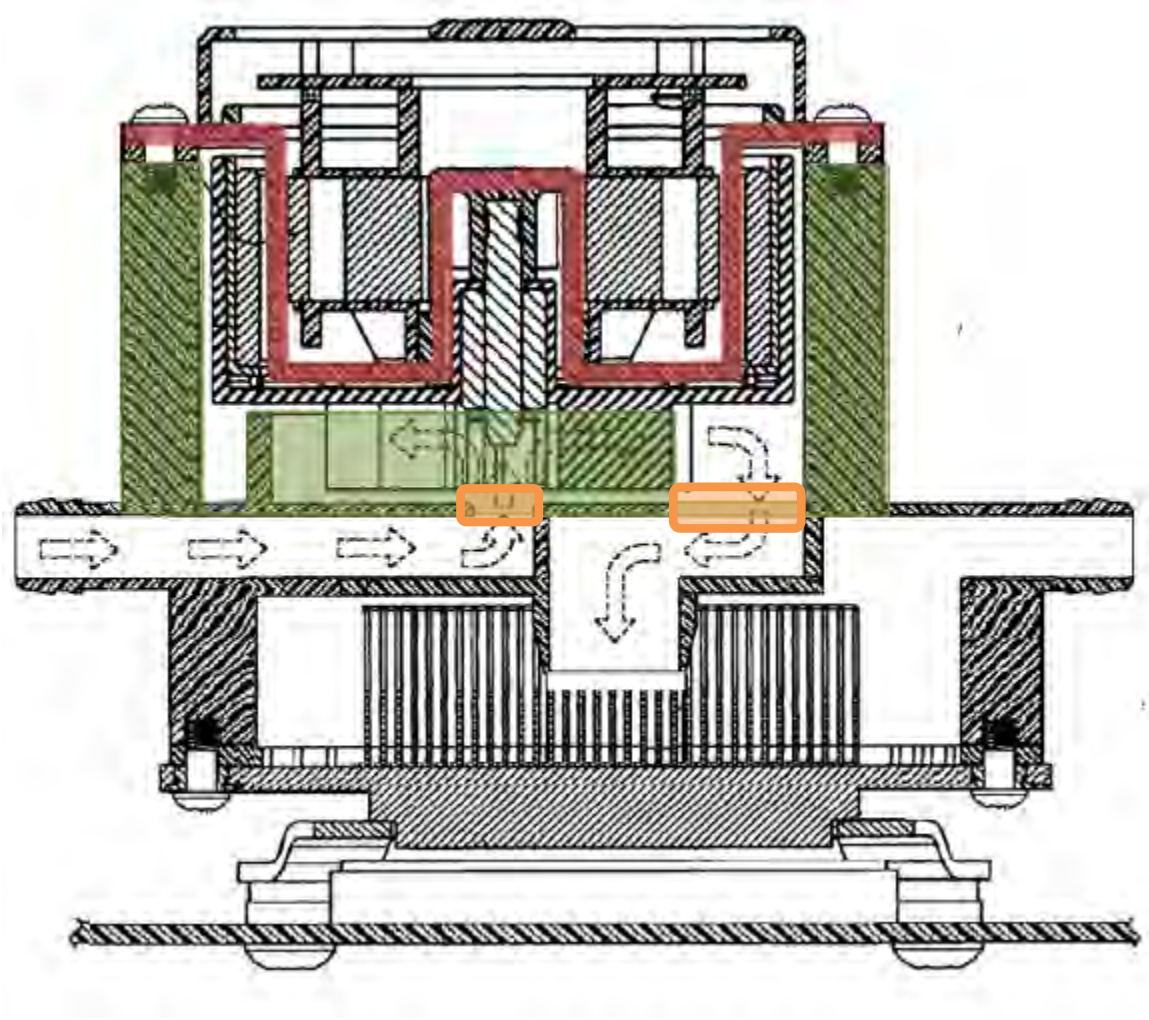

The impeller cover (green) has two passages (orange) for the cooling liquid to pass through. (Ex-1003, ¶¶67-68.)

[1-d] "a thermal exchange chamber formed below the pump chamber and vertically spaced apart from the pump chamber, the pump chamber and the thermal exchange chamber being separate chambers that are fluidly coupled together by the one or more passages; and"

Duan teaches [1-d].

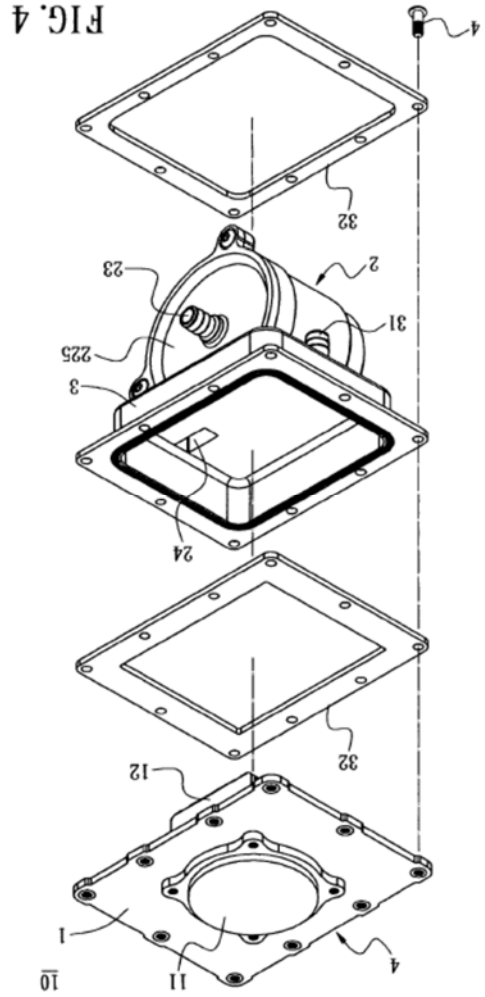

(Ex-1006, FIG. 4 (rotated upside-down).) As shown, Duan discloses a thermal exchange chamber (the space bounded by inside of cap 3 and top of cooling plate 1) formed below the pump chamber (accommodation chamber 21) and vertically spaced apart from the pump chamber (with reference to each other and the heat

exchanging interface), the pump chamber and the thermal exchange chamber being separate chambers fluidly coupled together by the one or more passages (liquid inlet 24). (Ex-1003, ¶70.)

When Duan is modified in view of Duan-I by rotating the pump (*see* limitation [1-a] above), the modified system also satisfies this limitation, as shown below (with the thermal exchange chamber shaded yellow and formed below and vertically spaced from the pump chamber — i.e., the space inside the impeller cover and under the chassis):

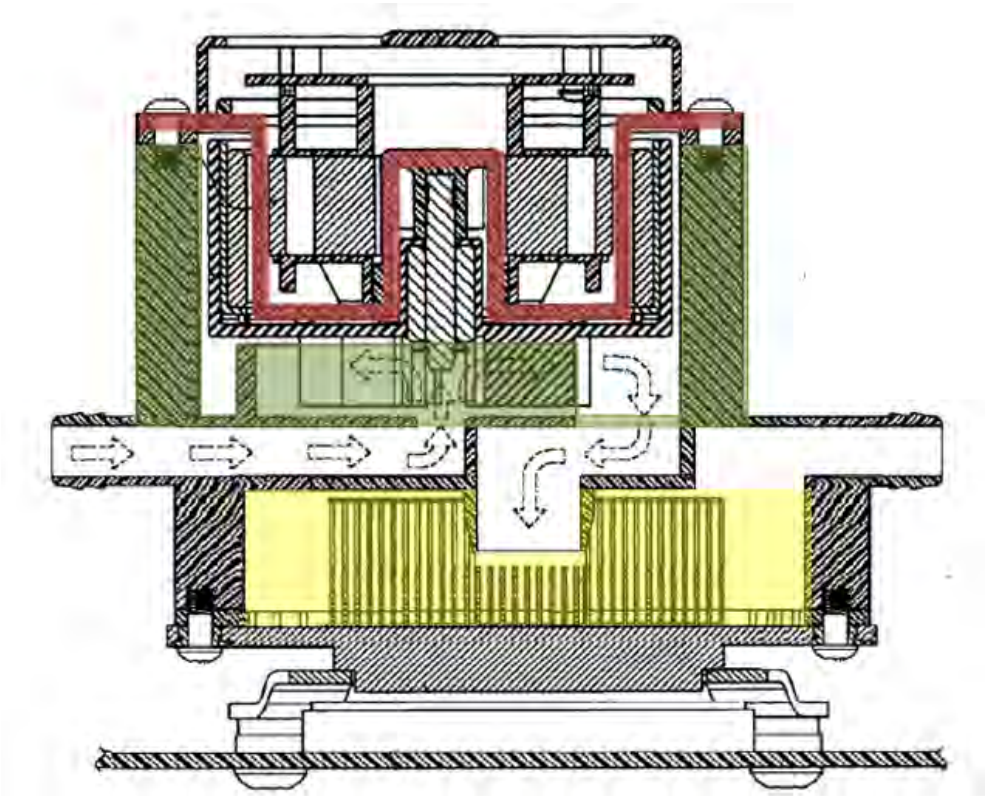

(Ex-1003, ¶71.)

[1-e] "a heat-exchanging interface, the heat-exchanging interface forming a boundary wall of the thermal exchange chamber, and configured to be placed in thermal contact with a surface of the heat-generating component; and"

Duan teaches this limitation, as shown nelow:

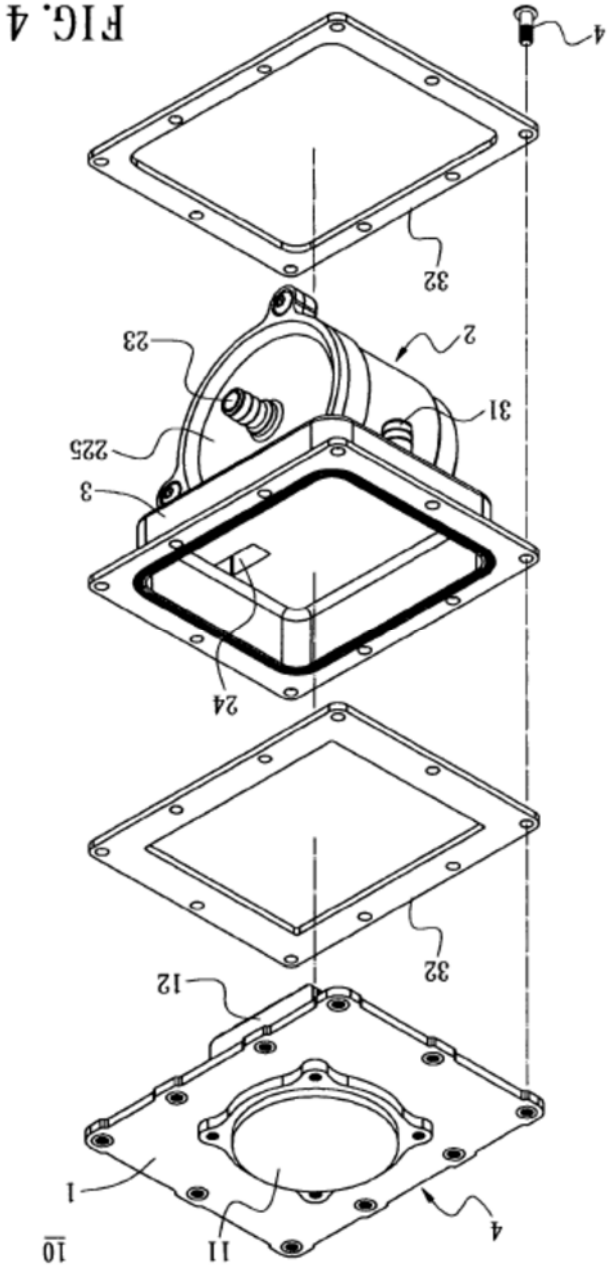

FIG. 4

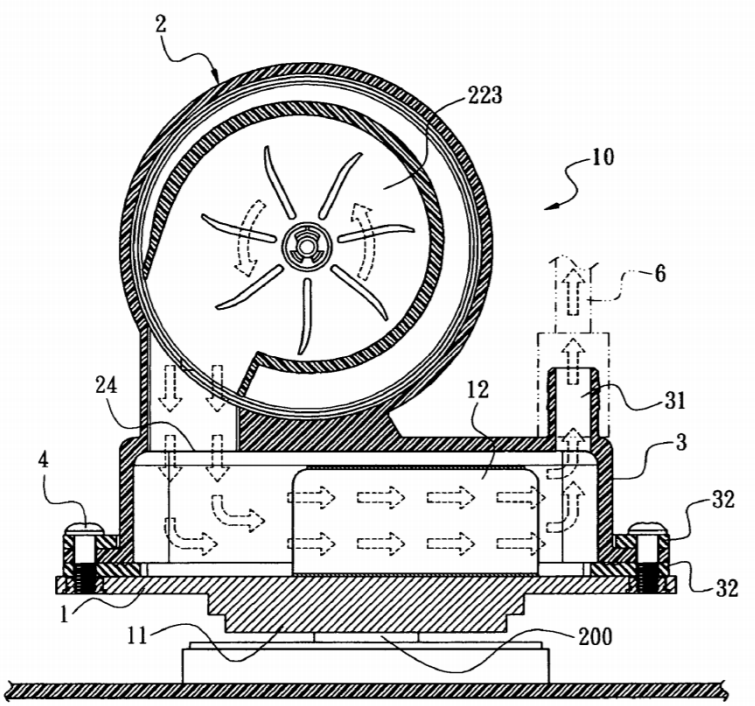

FIG. 8

(Ex-1006, FIGS. 4 (inverted), 8.) Duan discloses a "cooling plate 1" that includes "a heat absorbing face 11 on bottom thereof…in contact with a heat source." (Ex-1006, [0022].) Accordingly, Duan discloses a heat-exchanging interface (cooling plate 1 and heat absorbing face 11), the heat-exchanging interface forming a boundary wall of the thermal exchange chamber (cap 3 and cooling plate 1), and configured to be placed in thermal contact with a surface of the heat-generating component (CPU 200). (Ex-1003, ¶73.)

When Duan is modified in view of Duan-I by rotating the pump (*see* limitation [1-a] above), the modified system also satisfies this limitation, as shown below (with the heat-exchanging interface outlined in blue and the thermal exchange chamber

shaded yellow):

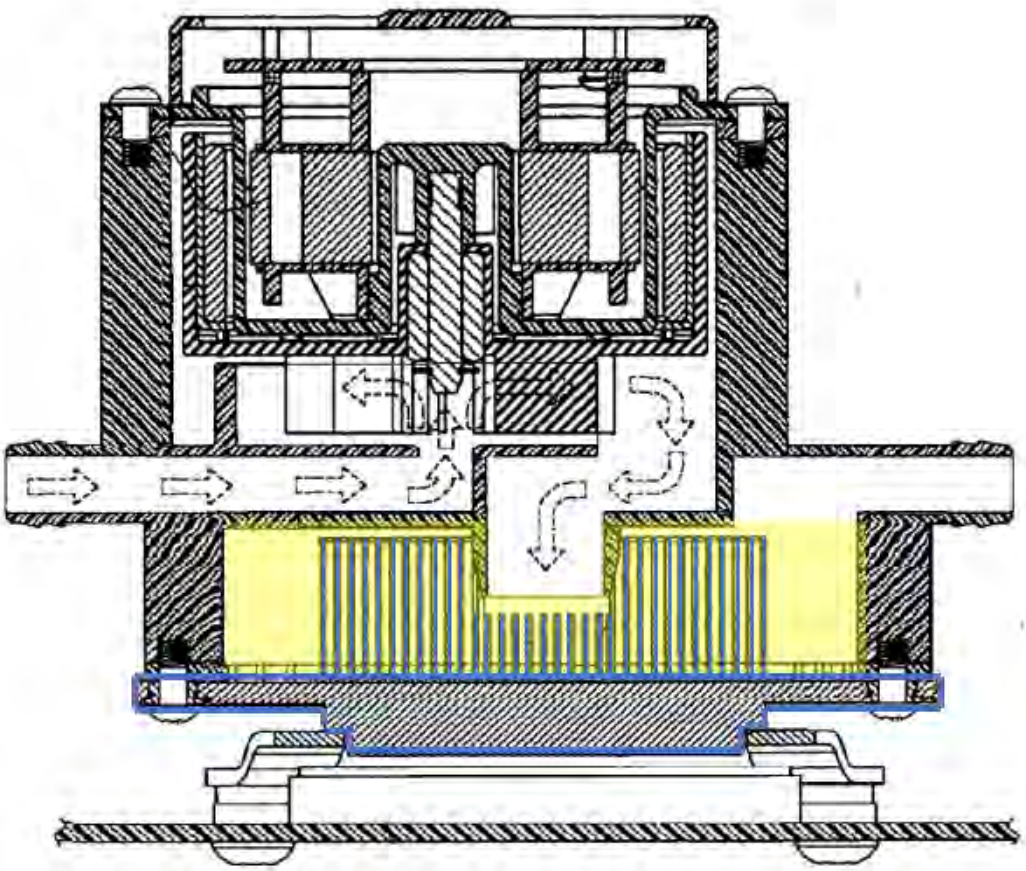

(Ex-1003, ¶74.)

[1-f] "a heat radiator fluidly coupled to the reservoir and configured to dissipate heat from the cooling liquid."

Duan teaches this limitation:

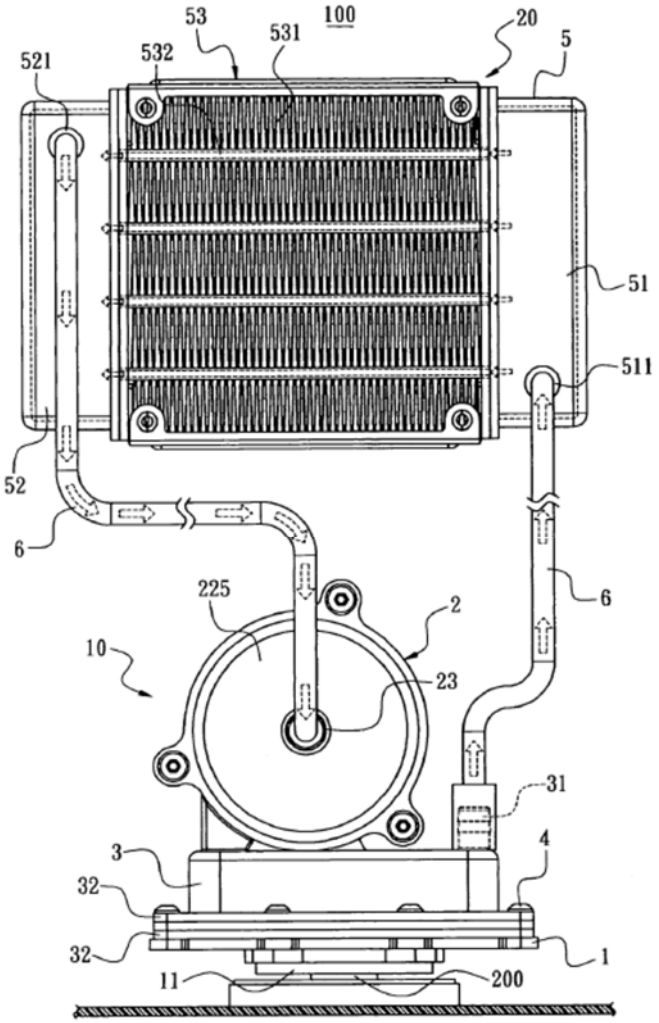

FIG. 6

(Ex-1006, FIG. 6.); [0025] ("[T]he water tank 20 of the liquid cooling cyclic mechanism 100 comprises a box 5 with a liquid entrance region 51 and a liquid exit region 52 provided on both sides of the water tank 20, respectively. The box 5 comprises a cooling stage 53 at center thereof and composed of a plurality of stacked heat-dissipating fins 531 arranged in rows. Runners 532 are defined between rows of the heat-dissipating fins 531; both ends of the runner 532 are communicated with the liquid entrance region 51 and the liquid exit region 52.").)

Accordingly, Duan discloses a heat radiator (cooling stage 53, heat-dissipating fins 531, and runners 532) fluidly coupled to the reservoir and configured to dissipate heat from the cooling liquid (duct 6, liquid inlet 511, and liquid outlet 521). (Ex-1003, ¶77.)

In the modified Duan system (*see* limitation [1-a] above), the heat radiator would be fluidly coupled to the reservoir at the inlet and outlet at either end of the device, shown below:

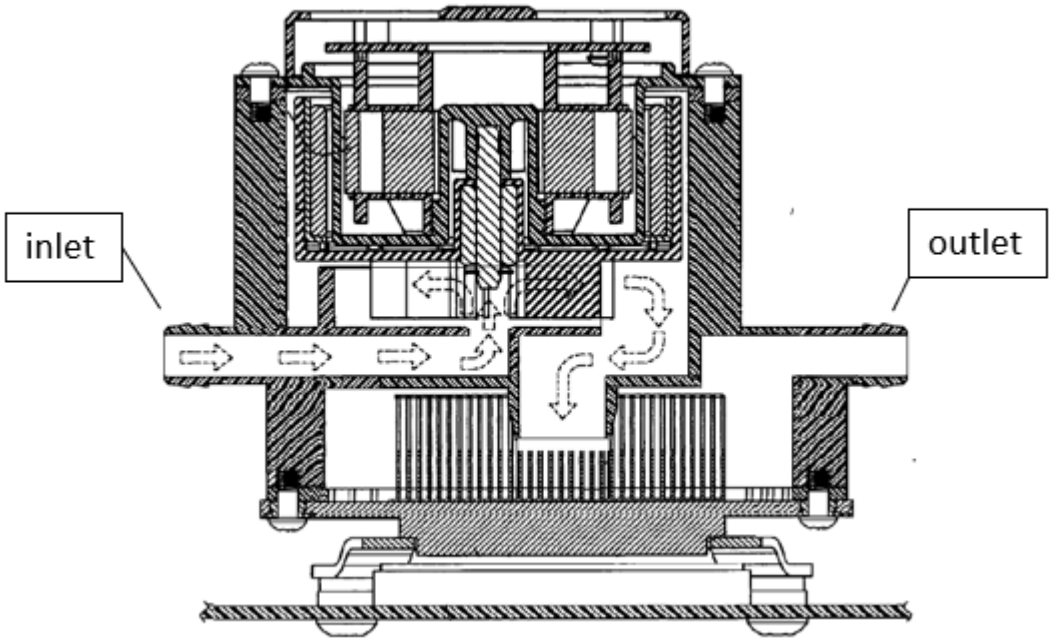

(*Id*., ¶78.)

2. Duan by itself or in view of Duan-I teaches claims 2-9.

[Claim 2] "The cooling system of claim 1, wherein the chassis shields the stator from the cooling liquid in the reservoir."

Duan teaches this limitation. As shown below, the double-sided chassis (accommodation chamber 21 - red) shields the stator (coil stage 221 - yellow) from the cooling liquid contained inside the pump chamber (at least partially defined) by impeller cover (lower cover 225 - green) and the double-sided chassis (accommodation chamber 21):

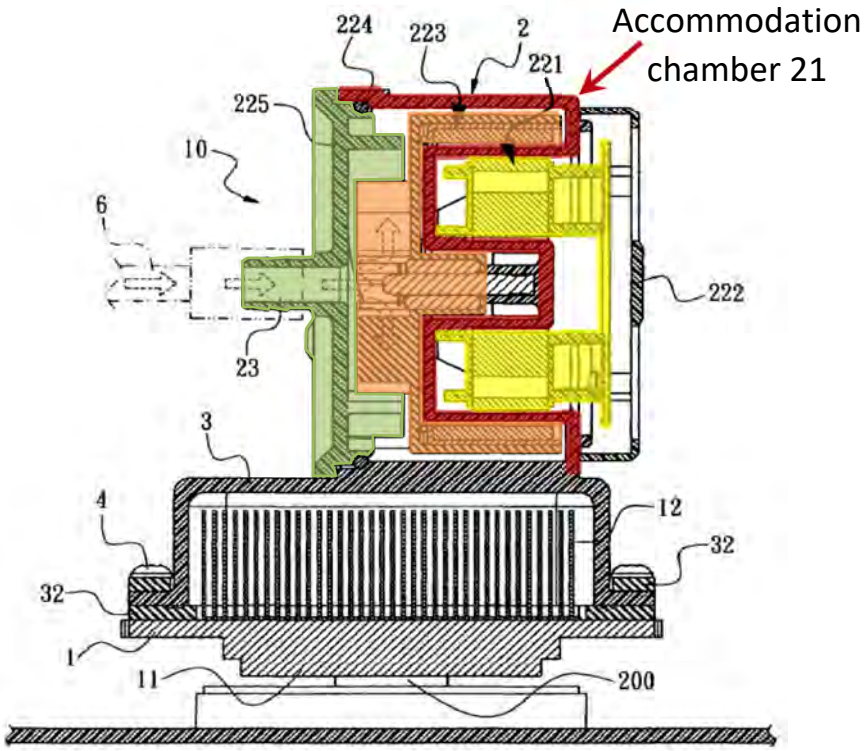

FIG. 7

(Ex-1003, ¶81.)

In the modified Duan system in view of Duan-I, the double-sided chassis (red) also shields the stator (yellow, located on the upper side of the chassis) from the cooling liquid (which, as shown by the arrows, circulates on the underside of the chassis):

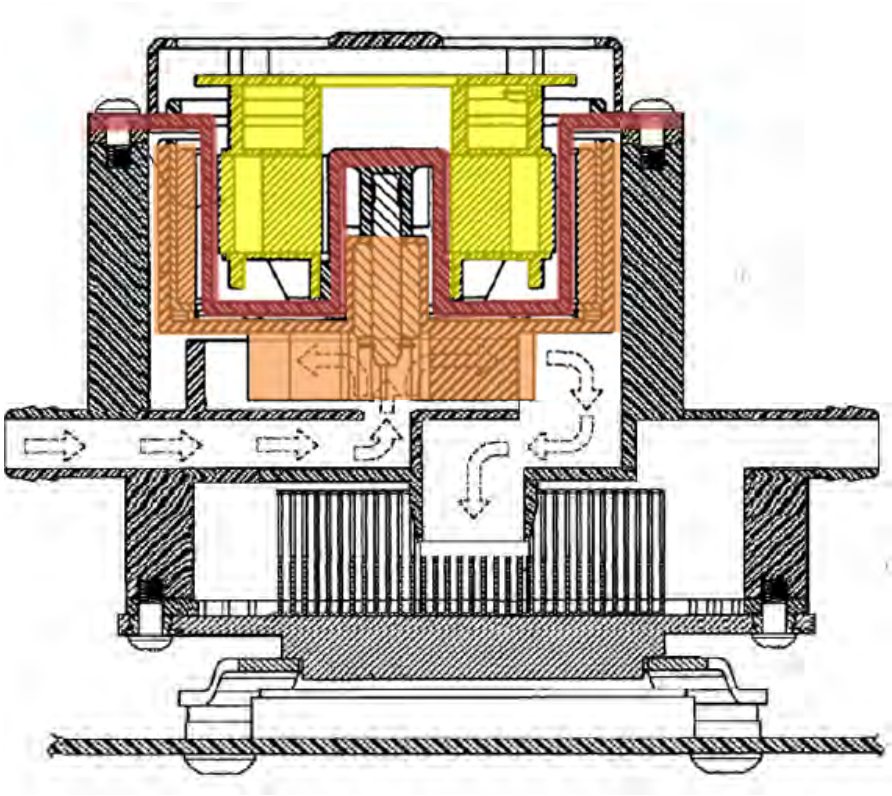

(Ex-1003, ¶82.)

[Claim 3] "The cooling system of claim 1, wherein the heat-exchanging interface includes a first side and a second side opposite the first side, and wherein the heat-exchanging interface contacts the cooling liquid in the thermal exchange chamber on the first side and the heat-exchanging interface is configured to be in thermal contact with the surface of the heat-generating component on the second side."

Duan teaches this limitation. As discussed above (*see* limitation [1-e]), and shown below, Duan discloses a heat-exchanging interface (cooling plate 1 and heat

absorbing face 11):

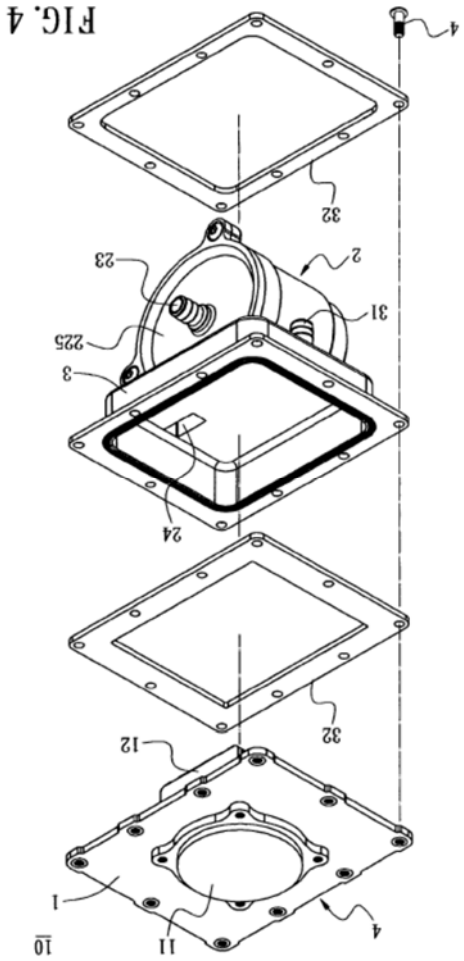

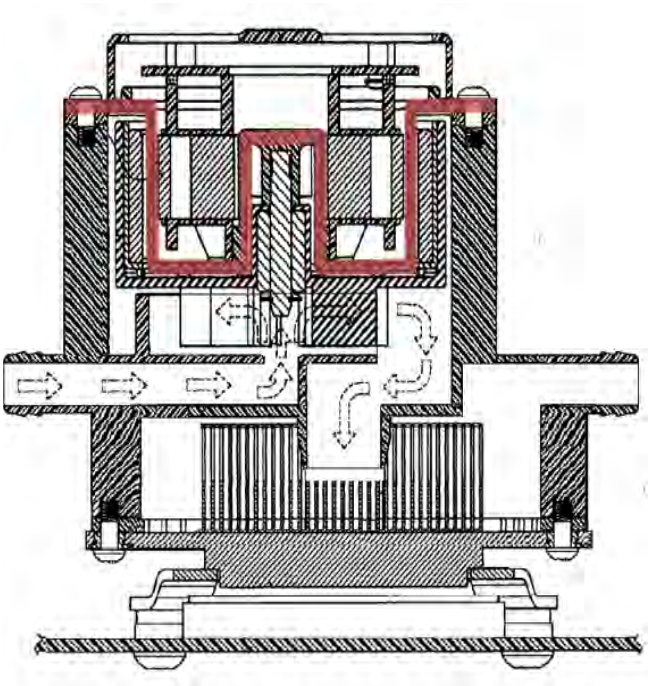

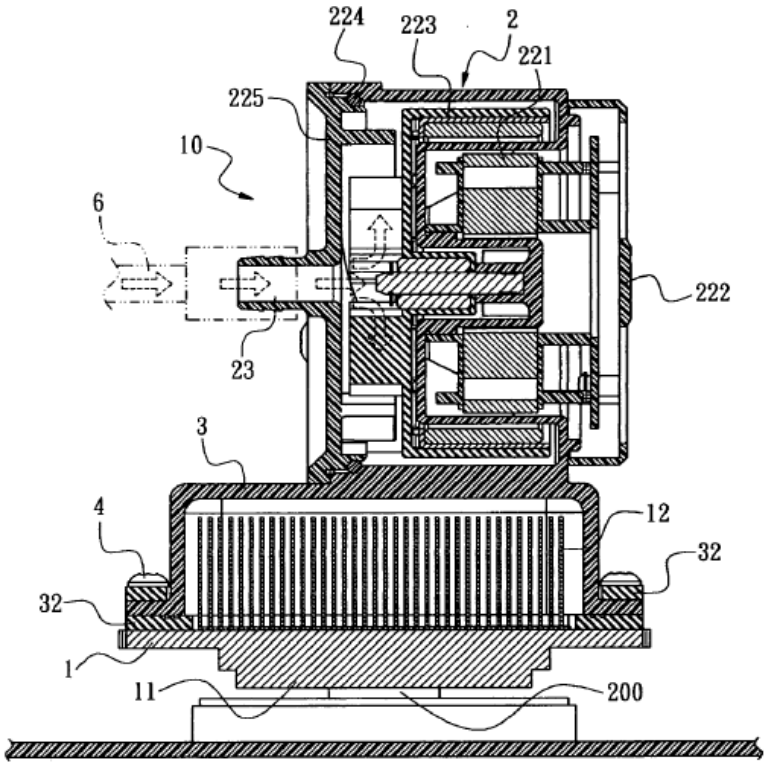

FIG. 7

(Ex-1006, FIGS. 4 (inverted), 7-8.) Duan's heat-exchanging interface has a first side (top surface of cool plate 1 and heat-dissipating plates 12), which contacts the cooling liquid in the thermal exchange chamber, and a second side opposite the first side (heat absorbing face 11) in thermal contact with the surface of the heat-generating component (CPU 200). (Ex-1003, ¶85; Ex-1006, [0022] ("cooling plate 1 comprises a **heat absorbing face 11** on bottom thereof and being **in contact with a heat source**"); [0026]; [0031].)

The modified system of Duan in view of Duan-I has a heat-exchanging interface with the same features (outlined in blue), and therefore it also teaches the

claim 3 limitation:

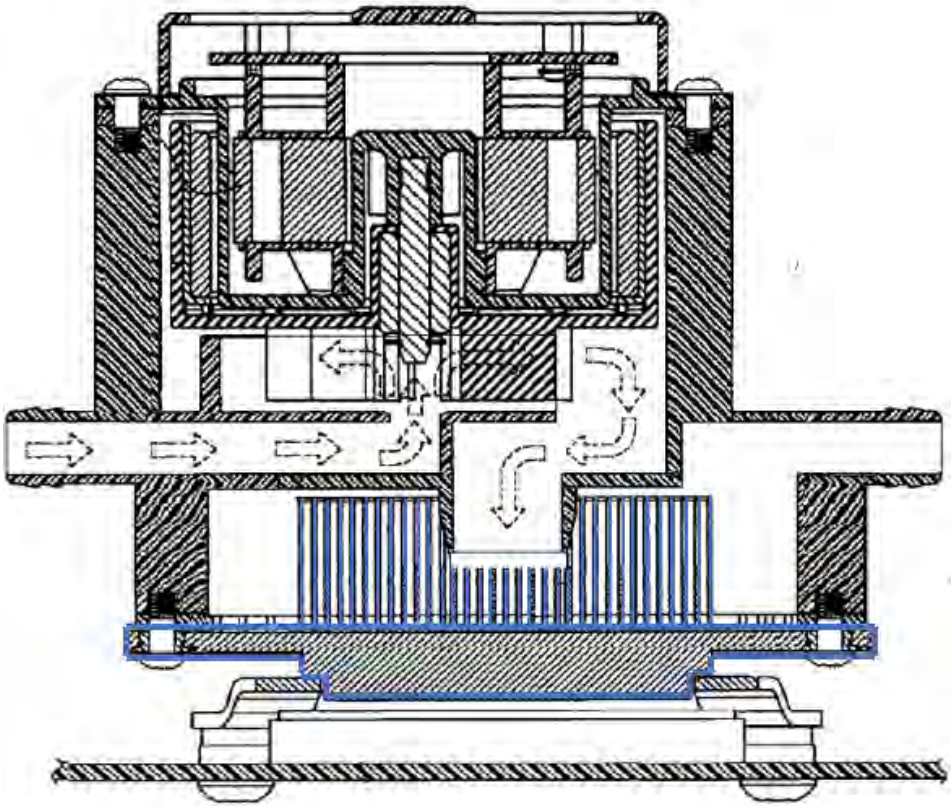

(Ex-1003, ¶86.)

[Claim 4] "The cooling system of claim 3, wherein the first side of the heat-exchanging interface includes features that are adapted to increase heat transfer from the heat-exchanging interface to the cooling liquid in the thermal exchange chamber."

Duan teaches this limitation.

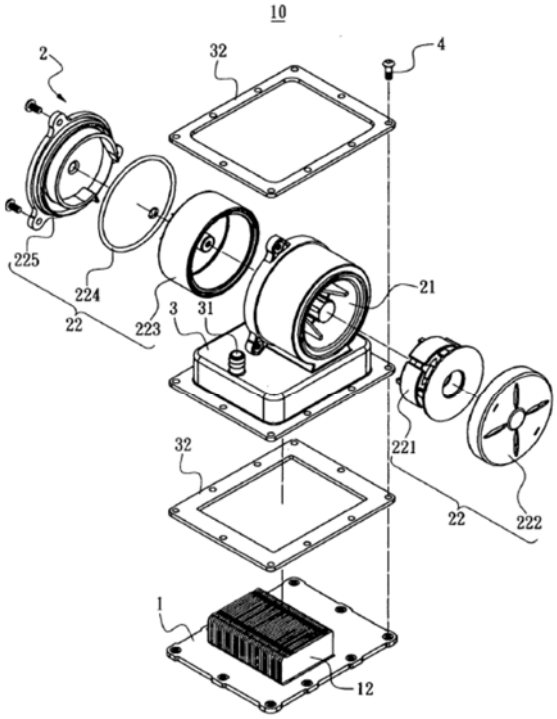

FIG. 2

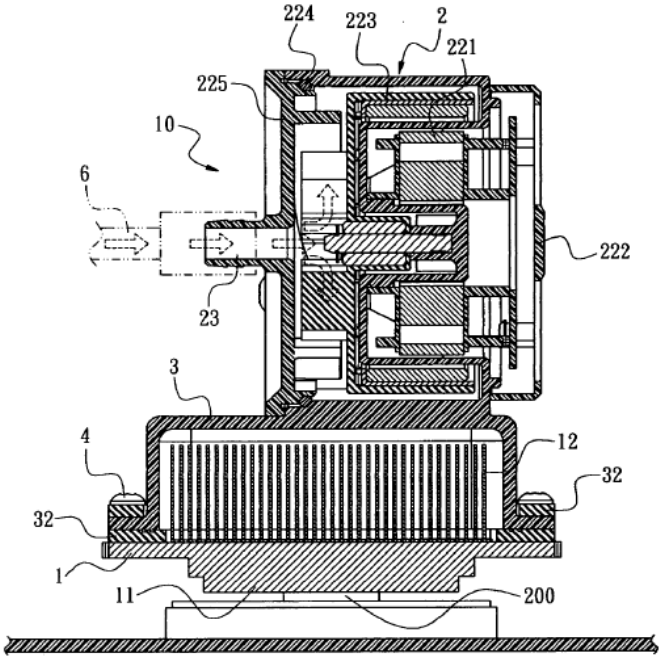

FIG. 7

Duan teaches that " "cool liquid can directly flush the heat-dissipating plates 12 **for enhancing heat dissipation efficiency**." (Ex-1006, [0022], [0031].) Accordingly, Duan discloses a first side (top side of cooling plate 1) of the heat-exchanging interface that includes features (heat-dissipating plates 12) adapted to increase heat transfer from the heat-exchanging interface to the cooling liquid in the thermal exchange chamber (cap 3 and cooling plate 1). (Ex-1003, ¶¶87-89.)

The modified system of Duan in view of Duan-I has a heat-exchanging interface with the same features (outlined in blue), and thus it also teaches claim 4:

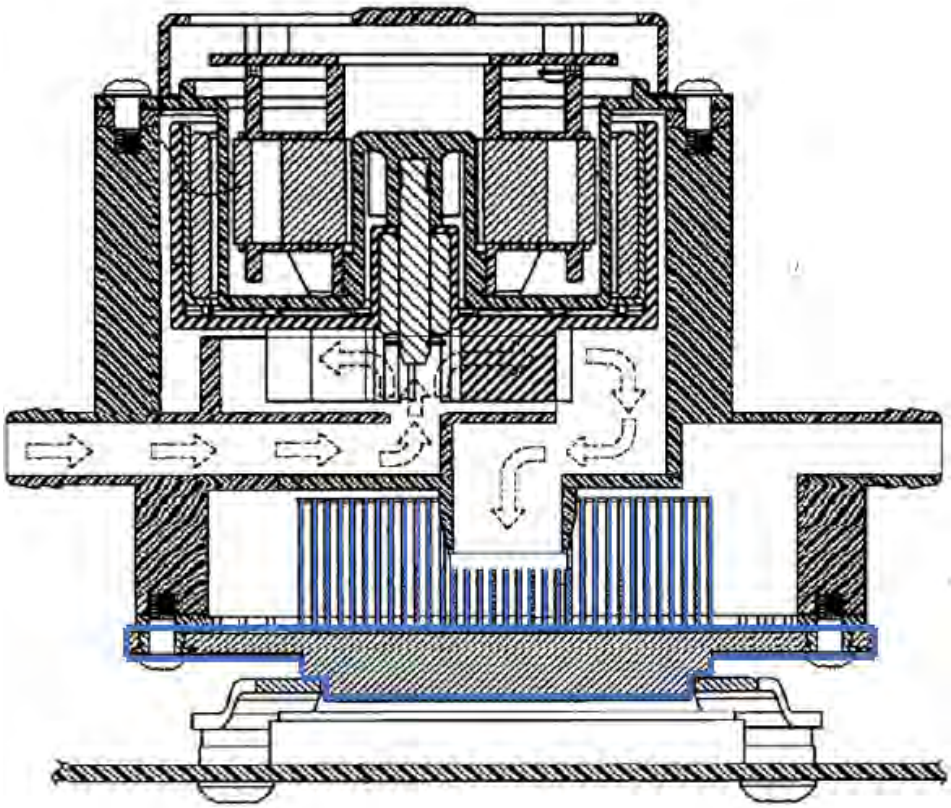

(Ex-1003, ¶90.)

[Claim 5] "The cooling system of claim 4, wherein the features include at least one of pins or fins."

Duan teaches this limitation.

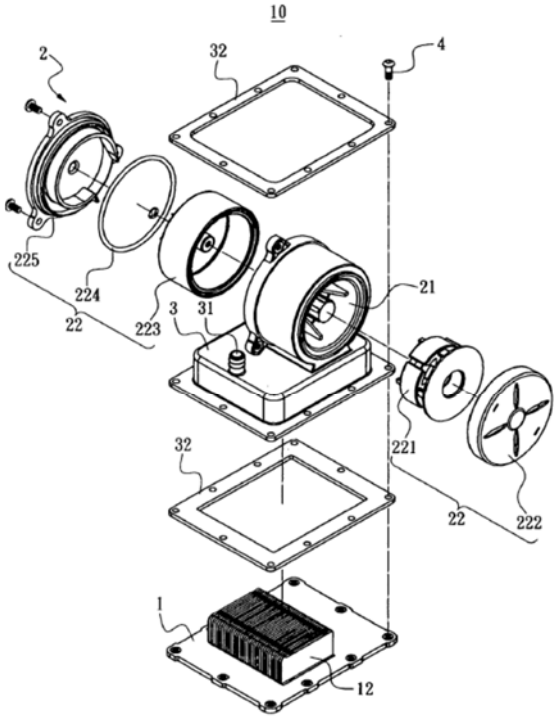

FIG. 2

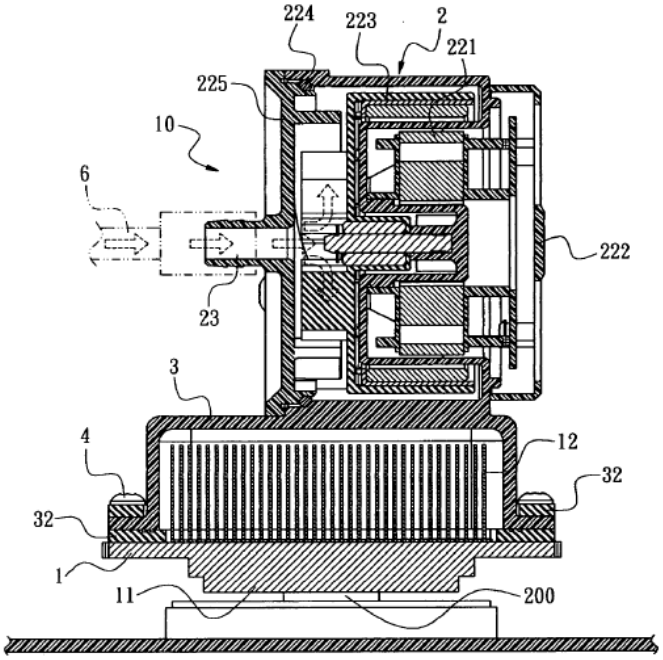

FIG. 7

(Ex-1006, FIGS. 2, 7.) Duan teaches that **"[t]he cool liquid then flows to the cap 3 through the first liquid outlet 24 for heat dissipating the heat-dissipating plates 12 in the cap 3.**" (*Id*., [0023], [0027].) Accordingly, Duan discloses the limitation of claim 5 that the features include at least one of pins or fins (heat-dissipating plates 12). It would have been obvious to a POSITA to substitute pins instead of fins for embodiments where the flow in the thermal exchange chamber is not along a single direction. (Ex-1003, ¶¶92-93.)

The modified system of Duan has a heat-exchanging interface (outlined in blue) with the same features, and therefore it also teaches claim 5:

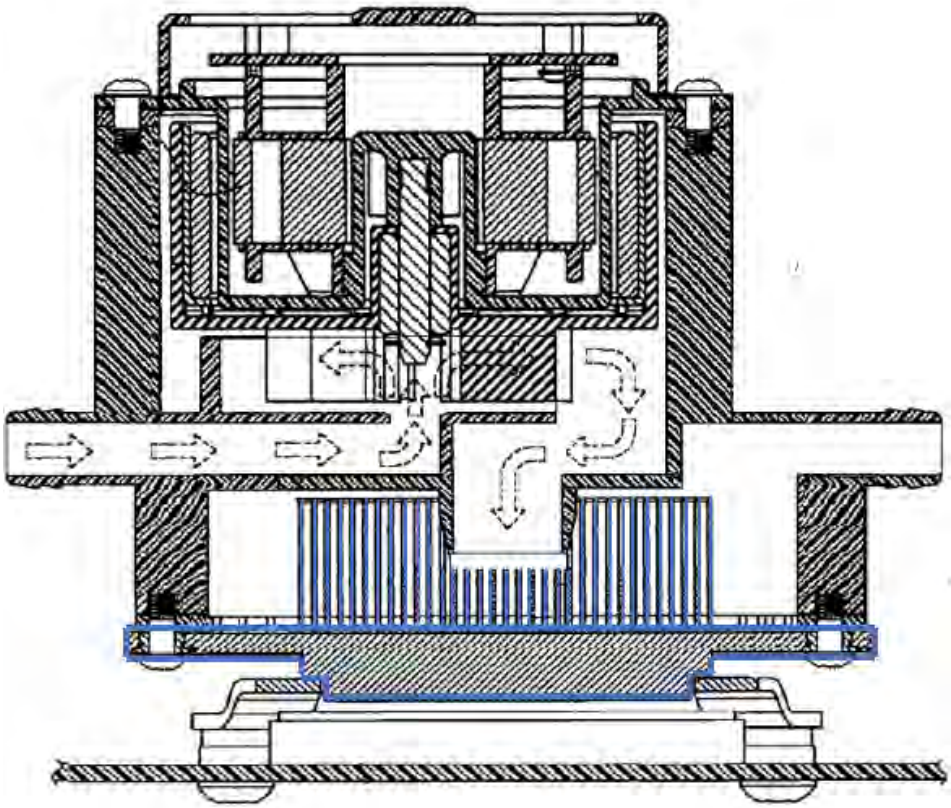

(Ex-1003, ¶94.)

[Claim 6] "The cooling system of claim 1, wherein a passage of the one or more passages that fluidly couple the pump chamber and the thermal exchange chamber is offset from a center of the impeller."

Duan teaches this limitation.

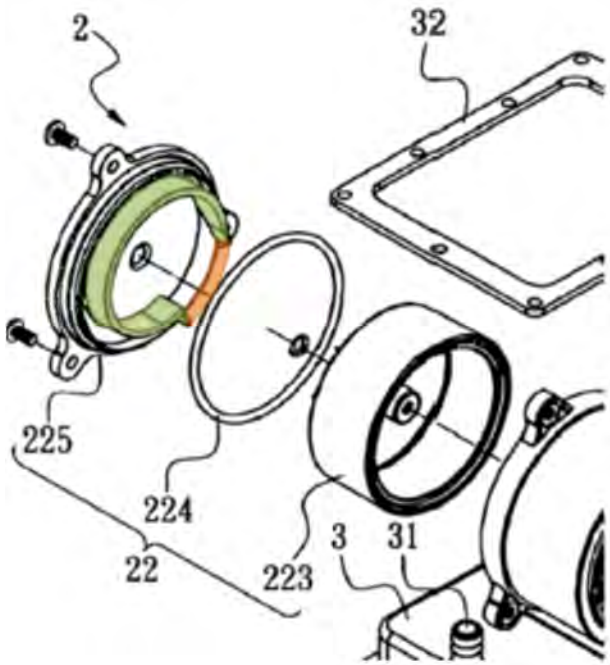

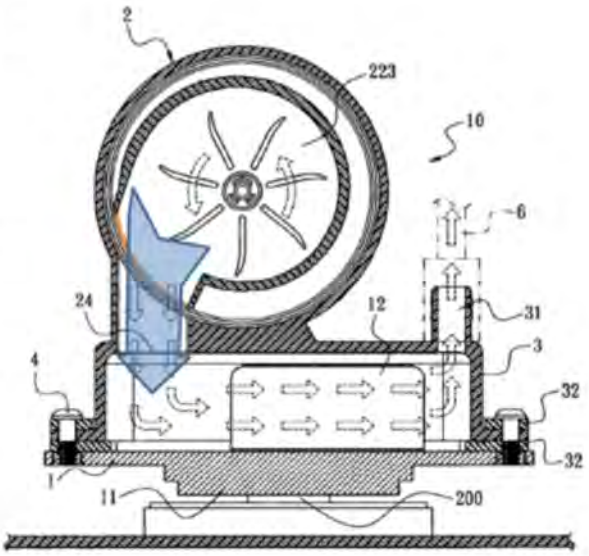

FIG. 8

(Ex-1006, FIGS. 2 (excerpt), 8.) Duan teaches a passage on the lower cover 225 of the one or more passages that fluidly couple the pump chamber (accommodation chamber 21) and the thermal exchange chamber (cap 3 and cooling plate 1) that is offset from a center of the impeller (223). (Ex-1003, ¶¶95-96.)

Although first liquid outlet 24 would have to be relocated in the modified Duan system, it would have been obvious for one of the *outlet* passages that couples the pump and thermal exchange chambers to be offset from a center of the impeller because when using centrifugal pumps, like the one in Duan, fluid enters at the center and *exits at the perimeter*, as shown below (with the passage highlighted yellow):

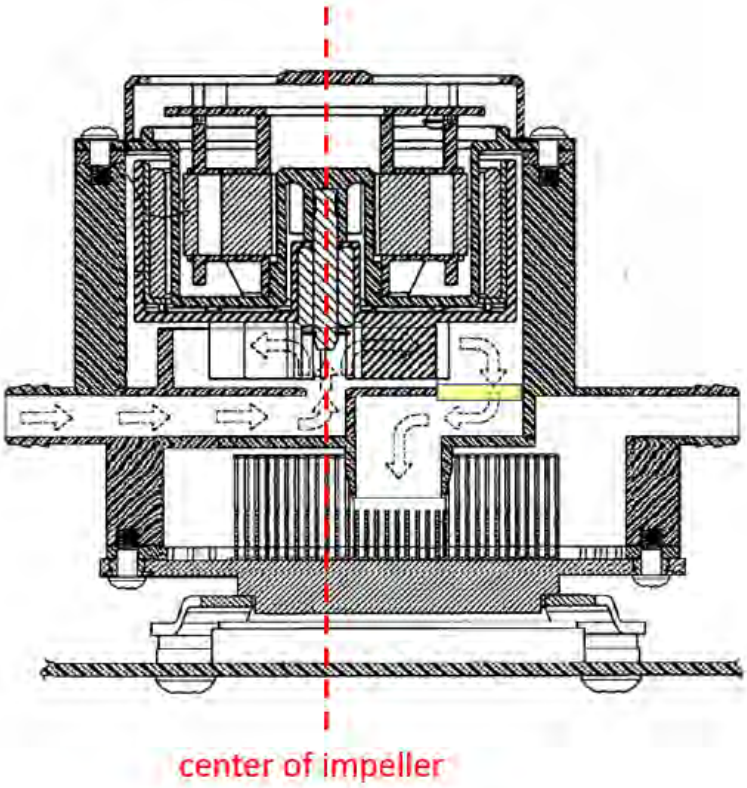

(Ex-1003, ¶97.) Setting aside that it makes the most sense to locate the outlet passage offset from the center, there is nothing that compels that the outlet passage be centered with the impeller. Thus, it would have been obvious to try an offset location (as in Duan's original configuration) when relocating the outlet passage in the modified Duan system, as one of only two finite options for the passage location (the other being centered). (*Id*., ¶98; *see In re Kubin*, 561 F.3d 1351, 1359–60 (Fed. Cir. 2009) ("[W]here a skilled artisan merely pursues 'known options' from a 'finite number of identified, predictable solutions,' obviousness under § 103 arises."); *ACCO Brands Corp. v. Fellowes, Inc*., 813 F.3d 1361, 1367 (Fed. Cir. 2016) (where an "ordinary artisan would…be left with two design choices…[e]ach of these two

design choices is an obvious combination”).

[Claim 7] “The cooling system of claim 1, wherein the impeller includes a plurality of curved blades.”

This limitation is disclosed or suggested by Duan:

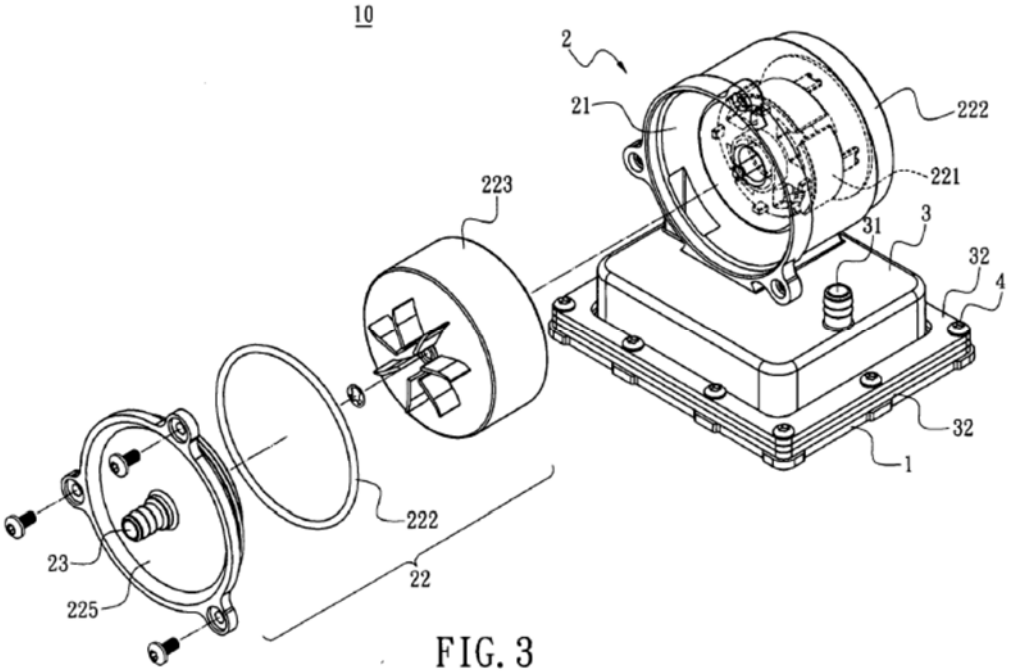

FIG. 3

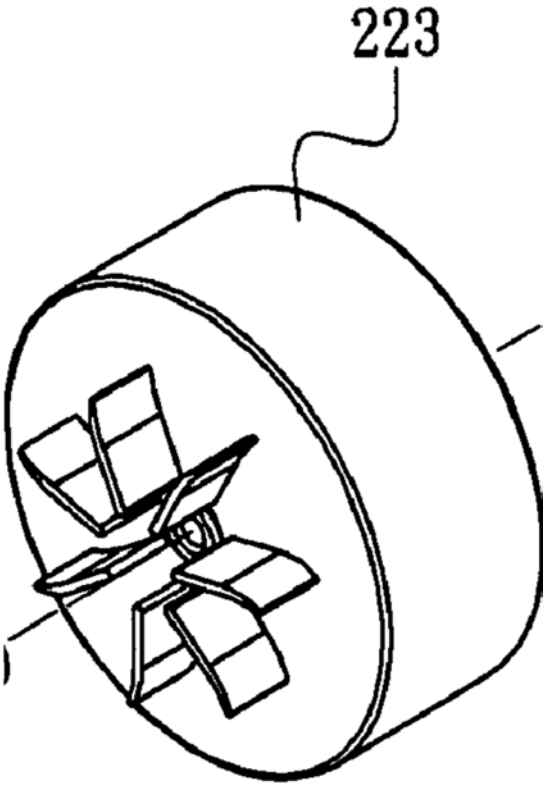

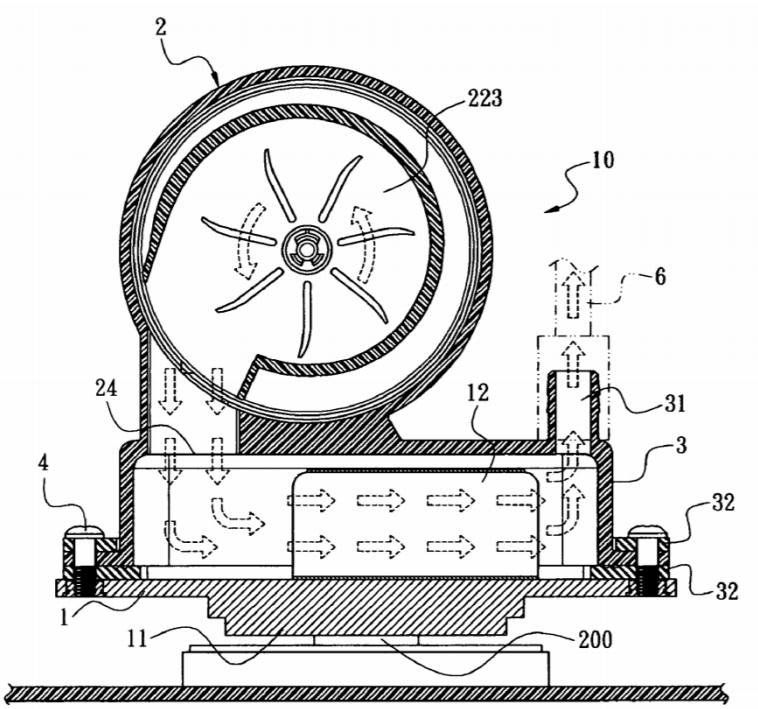

FIG. 8

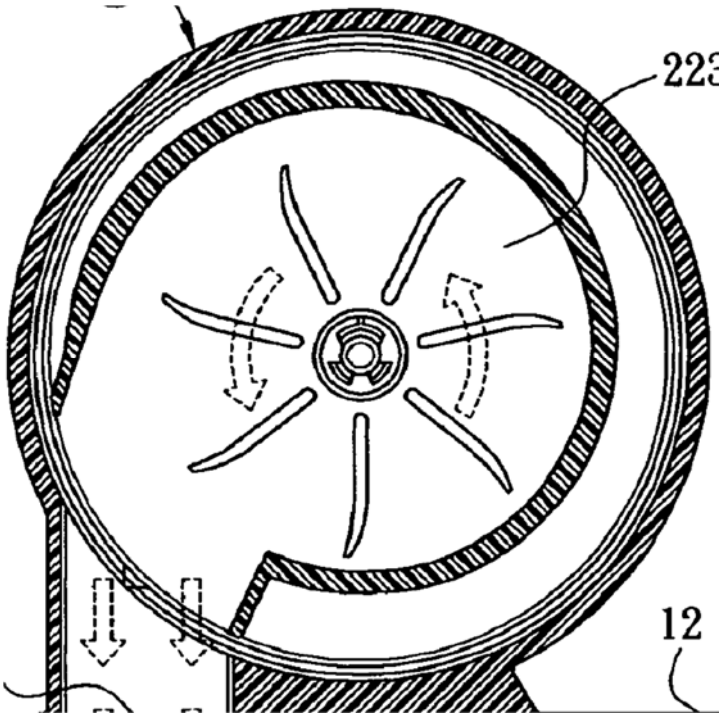

(Ex-1006, FIGS. 3, 8.) As shown, Duan's impeller blades are curved. (Ex-1003, ¶100).

[Claim 8] "The cooling system of claim 1, wherein the heat-exchanging interface includes one of copper and aluminum."

As discussed above with respect to [1-e], Duan teaches a heat-exchanging interface, but it does not explicitly disclose what material the heat-exchanging interface is made of. It would have been obvious to a POSITA, however, to use copper or aluminum because they are used extensively in electronics cooling applications due to their high thermal conductivity (especially copper). (Ex-1003, ¶101; Ex-1008, Batchelder, 1:34-38 ("The thermal power density emerging from the chip will be so high in ten years than even **copper** or silver spreader plates will not be adequate.").) Due to their high thermal conductivity, a POSITA would have been

motivated to use a copper or aluminum for the heat-exchanging interface to increase heat transfer between the cooling liquid and the heat-generating component. (Ex-1003, ¶101.) Use of copper or aluminum would also have been obvious to try. (*Id*.)

<u>[Claim 9] "The cooling system of claim 1, wherein the heat radiator is fluidly coupled to the reservoir using flexible conduits, and the heat radiator is configured to be positioned remote from the reservoir."</u>

Duan teaches this limitation. As discussed above (*see* limitation [1-f]), Duan discloses a heat radiator fluidly coupled (via ducts 6) to the reservoir.

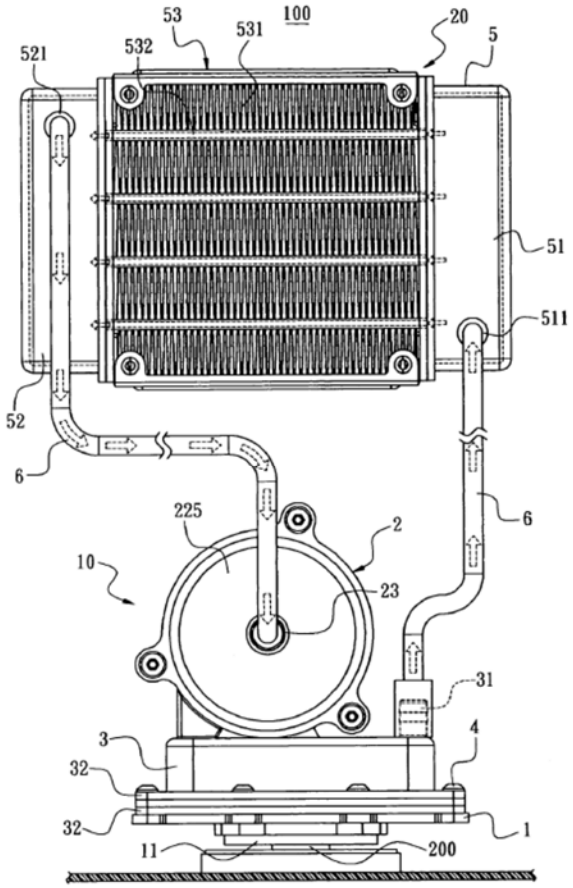

FIG. 6

(Ex-1006, FIG. 6, [0025], [0026].

Although Duan does not explicitly disclose that the duct 6 is flexible, a POSITA would have been motivated to use flexible tubing such as rubber tubing to facilitate assembly. (Ex-1003, ¶105.) Accordingly, Duan discloses the cooling system of claim 1, wherein the heat radiator (cooling stage 53, heat-dissipating fins 531, and runners 532) is fluidly coupled to the reservoir using flexible conduits (duct 6), and the heat radiator is configured to be positioned remote from the reservoir (accommodation chamber 21, cap 3, and cooling plate 1). (*Id*., ¶106.)

3. Duan and Duan-I disclose or teach each limitation of claim 10 and render it obvious.

[10-PRE]

Duan by itself or in view of Duan-I teaches [10-PRE] for the same reasons discussed above for [1-PRE].[1] (Ex-1003, ¶107.)

[10-a] "a centrifugal pump adapted to circulate a cooling liquid, the pump including: an impeller exposed to the cooling liquid; and a stator isolated from the cooling liquid:"

Duan by itself or in view of Duan-I teaches [10-a] for the same reasons discussed above for [1-a].

[1] All cross-references to discussions earlier in the Petition should be understood to be incorporated by reference.

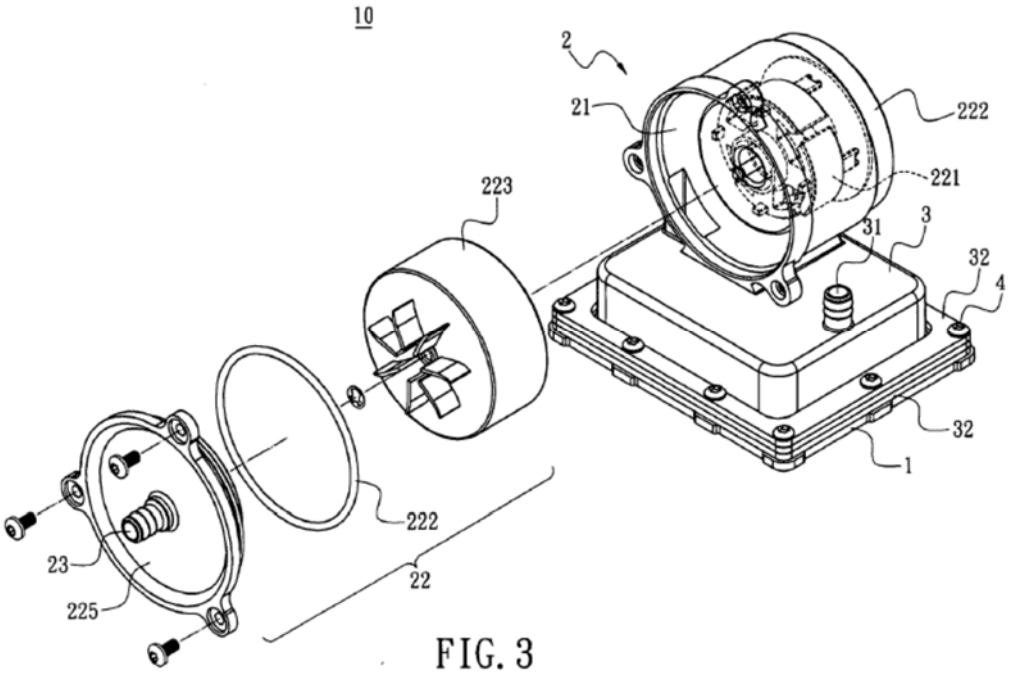

FIG. 3

(Ex-1006, [0023] ("the **liquid driving module 2** can be" a "**centrifugal pump**").) Duan teaches a centrifugal pump (liquid driving unit 2) adapted to circulate a cooling liquid. (Ex-1003, ¶¶108-109.)

[10-b] "a reservoir configured to be thermally coupled to a heat-generating component of the computer system, the reservoir including:"

Duan by itself or in view of Duan-I teaches [10-b] for the same reasons discussed above for [1-b].

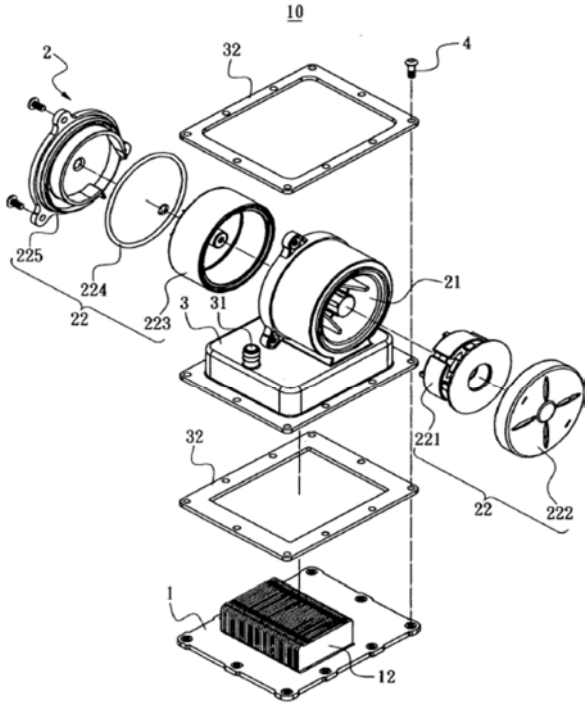

FIG. 2

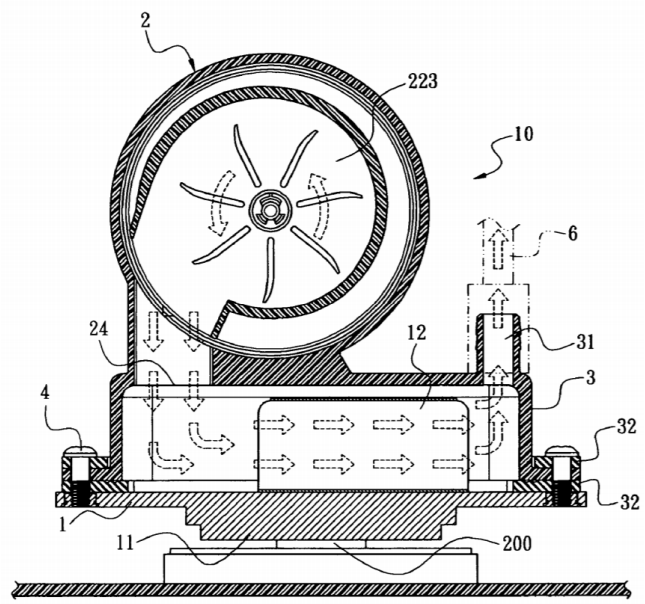

FIG. 8

Duan by itself or in view of Duan-I teaches a reservoir (accommodation chamber 21, cap 3, and cooling plate 1) configured to be thermally coupled to a heat-generating component (CPU 200) of the computer system. (Ex-1003, ¶¶110-111.)

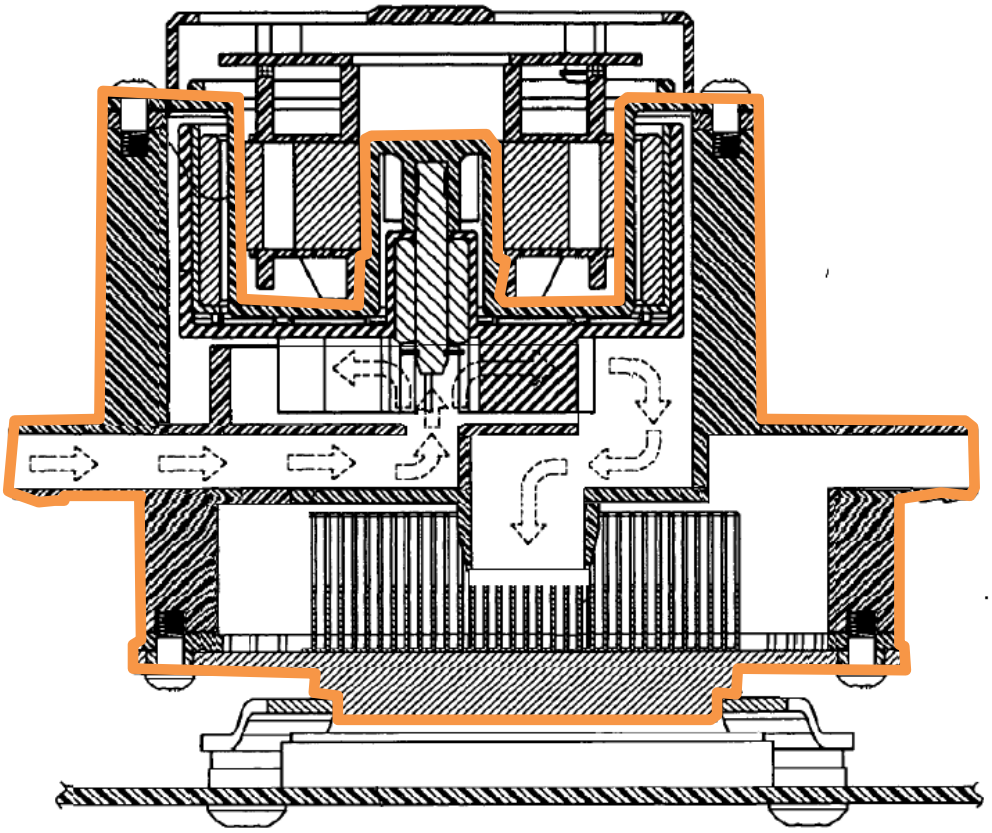

[10-c] "a thermal exchange chamber adapted to be positioned in thermal contact with the heat-generating component;"

Duan by itself or in view of Duan-I teaches [10-c] for the same reasons discussed above for [1-d].

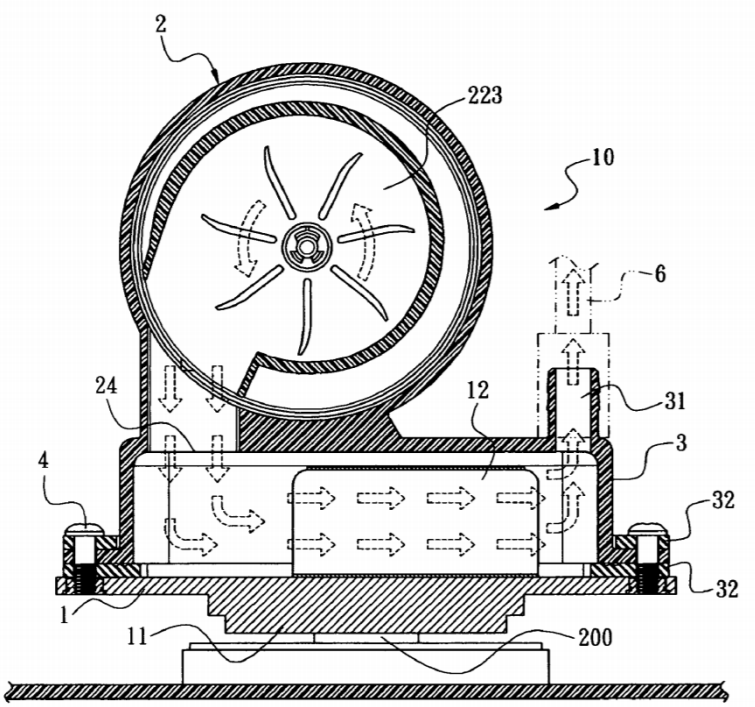

FIG. 8

(Ex-1006, FIG. 8; [0022] ("The cooling plate 1 comprises a heat absorbing face 11 on bottom thereof and being in contact with a heat source. A plurality of heat-dissipating plates 12 are formed on top face of the cooling plate 1…."); [0026] ("heat absorbing face 11 being in contact with the CPU 200 for heat dissipating the CPU 200"); [0027] ("The cool liquid then flows to the cap 3…for heat dissipating the heat-dissipating plates 12 in the cap 3).

Duan discloses a thermal exchange chamber (cap 3 and cooling plate 1) adapted to be positioned in thermal contact with the heat-generating component (CPU 200). Duan in view of Duan-I teaches the same:

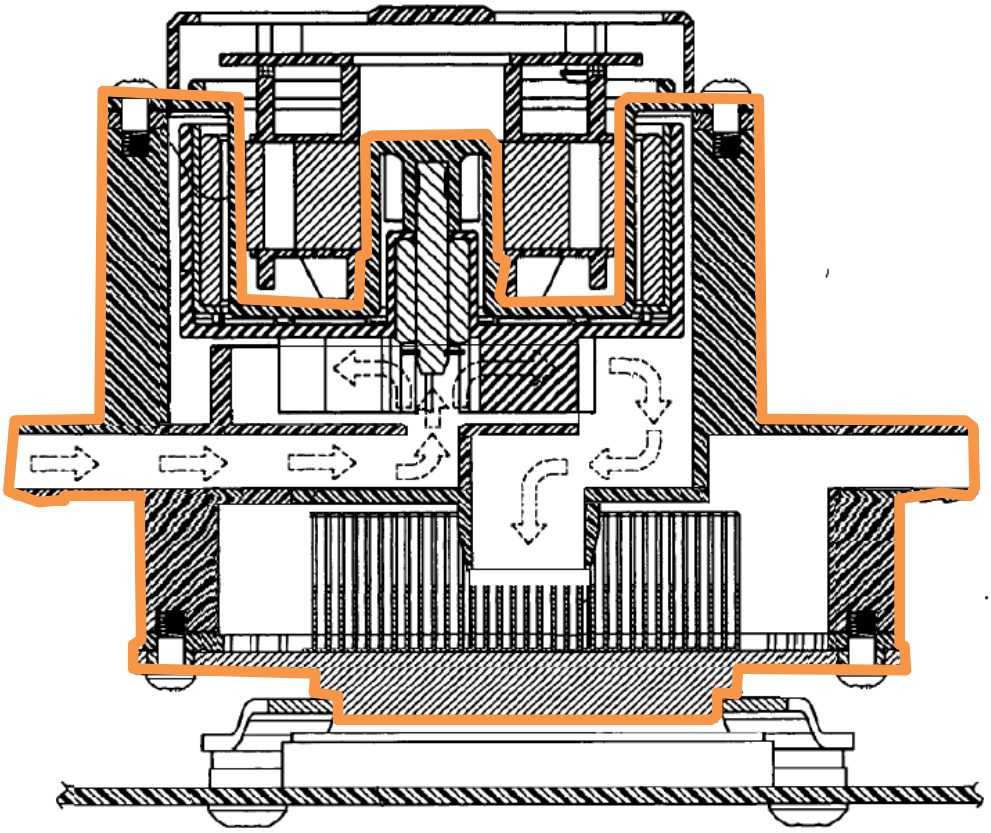

(Ex-1003, ¶¶112-115.)

[10-d] "a separate pump chamber vertically spaced apart from the thermal exchange chamber and coupled with the thermal exchange chamber through one or more passages configured for fluid communication between the pump chamber and the thermal exchange chamber, and wherein at least one of the one or more passages is offset from a center of the impeller."

Duan by itself or in view of Duan-I teaches [10-d] for the same reasons discussed above for [1-c] and [1-d]. (Ex-1003, ¶116.)

[10-e] "wherein at least one of the one or more passages is offset from a center of the impeller."

Duan by itself or in view of Duan-I teaches [10-e] for the same reasons discussed above for [claim 6]. (Ex-1003, ¶117.)

4. Duan teaches each limitation of claims 11-14.

[Claim 11] "The cooling system of claim 10, wherein a top wall of the reservoir physically separates the impeller from the stator:"

Duan teaches (1) a reservoir and (2) an impeller and stator that are physically separated, as discussed above for [1-a] and [1-b]. A "top wall" of the reservoir physically separating the impeller (orange) from the stator (yellow) is indicated below:

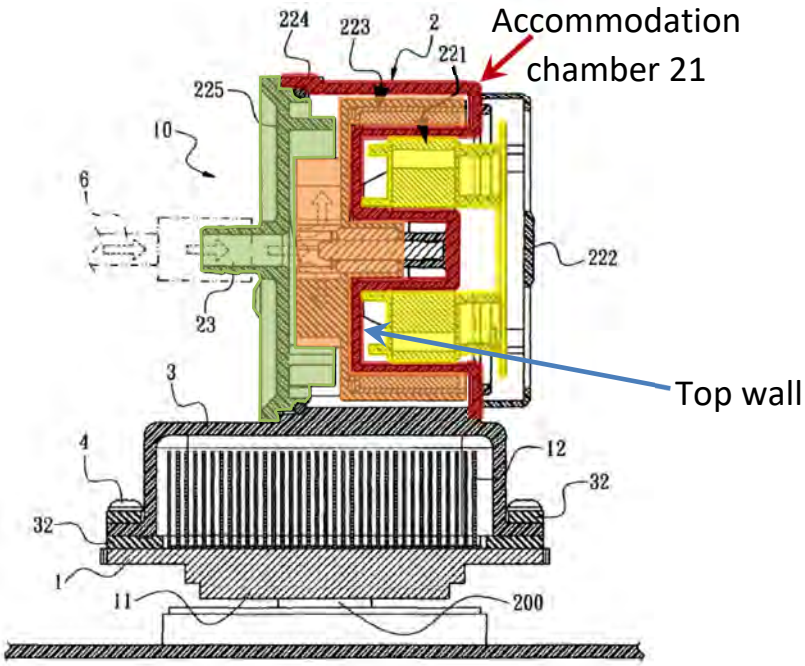

FIG. 7

(Ex-1003, ¶119.)

In the modified Duan system in view of Duan-I, the "top wall" of the reservoir physically separates the impeller from the stator, as shown below:

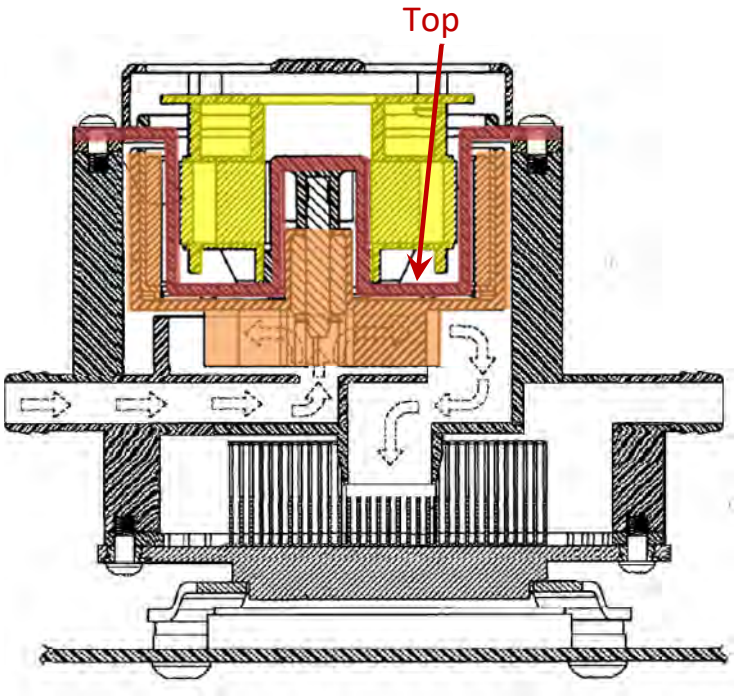

(Ex-1003, ¶120.)

[Claim 12] "The cooling system of claim 10, wherein the thermal exchange chamber includes a heat-exchange interface configured to be placed in thermal contact with the heat-generating component."

Duan by itself or in view of Duan-I teaches [Claim 12] for the same reasons discussed above for [1-e]. (Ex-1003, ¶121.)

[Claim 13] "The cooling system of claim 10, further including a heat radiator fluidly coupled to the reservoir using flexible conduits, wherein the heat radiator is configured to be positioned remote from the reservoir."

Duan by itself or in view of Duan-I teaches [Claim 13] for the same reasons discussed above for [1-f] and [claim 9]. (Ex-1003, ¶122.)

[Claim 14] "The cooling system of claim 10, wherein the fluid passage that is offset from the center of the impeller is positioned tangentially to the circumference of the impeller."

Duan by itself or in view of Duan-I teaches [Claim 14] for the same reasons discussed above for [claim 6]. As shown below, the offset passage is positioned tangentially to the circumference of the impeller in both Duan (first liquid outlet 24) and the modified Duan system in view of Duan-I (yellow passage):

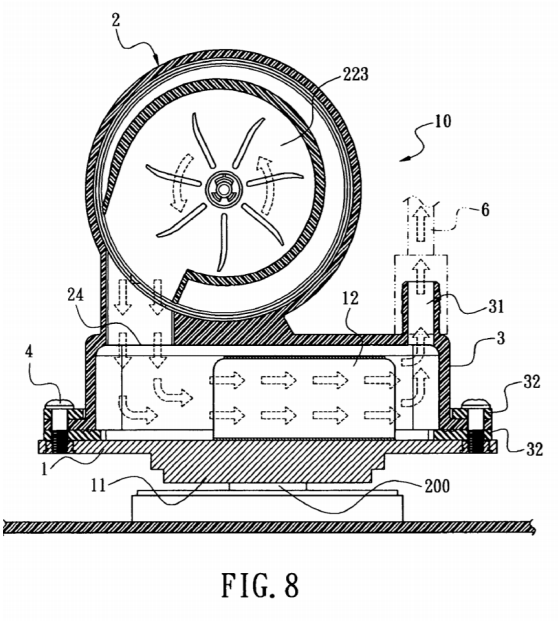

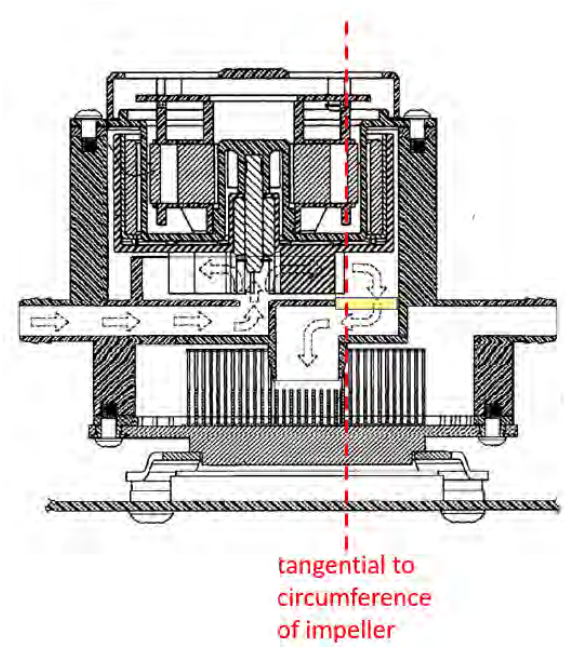

(Ex-1006, FIG. 8; Ex-1003, ¶123.)

5. Duan and Duan-I teach each limitation of claim 15 and render it obvious.

[15-PRE]

Duan by itself or in view of Duan-I teaches [15-PRE] for the same reasons discussed above for [1-PRE]. (Ex-1003, ¶124.)

[15-a] "a pump adapted to circulate a cooling liquid, the pump including: an impeller exposed to the cooling liquid; and a stator isolated from the cooling liquid;"

Duan by itself or in view of Duan-I teaches [15-a] for the same reasons discussed above for [1-a]. (Ex-1003, ¶125.)

[15-b] "a reservoir including"

Duan by itself or in view of Duan-I teaches [15-b] for the same reasons discussed above for [1-b]. (Ex-1003, ¶126.)

[15-c] "an impeller cover, an intermediate member and"

Duan by itself or the modified Duan system in view of Duan-I teaches an "impeller cover" for the same reasons discussed above for [1-c]. Duan by itself or the modified Duan system in view of Duan-I also teaches an intermediate member.

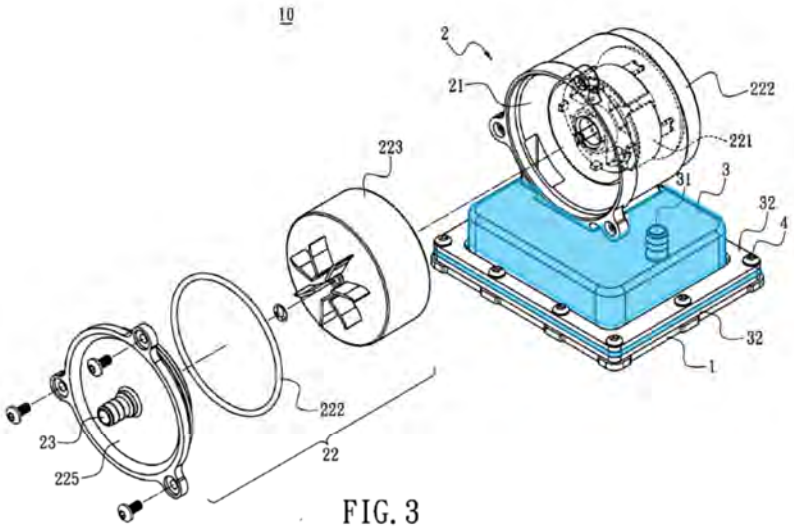

FIG. 3

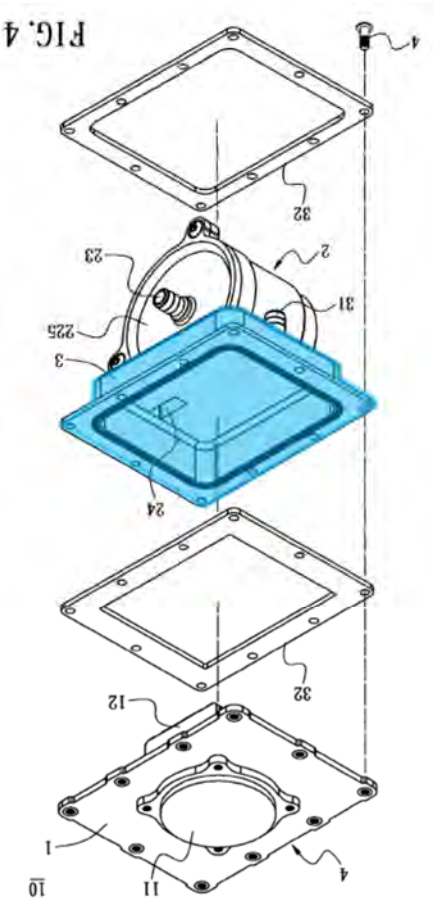

FIG. 4

(Ex-1006, FIGS. 3, 4 (inverted).) As shown above, Duan discloses an intermediate member (cap 3 - blue). (Ex-1003, ¶¶128-129.)

The modified Duan system also includes both an impeller cover (green) and intermediate member (blue):

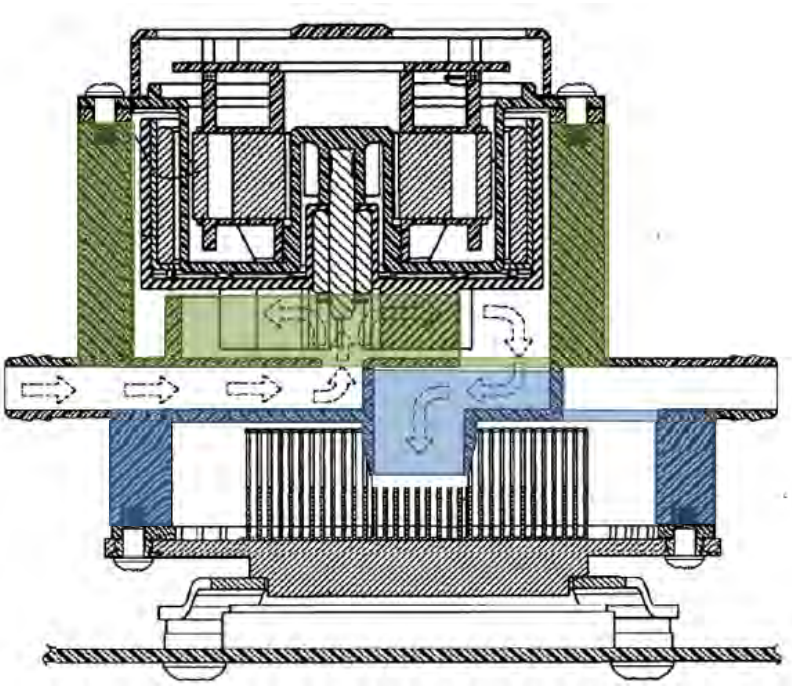

(Ex-1003, ¶130.)

[15-d] "a heat exchange interface…wherein a first side of the heat-exchanging interface is in contact with a cooling liquid in the thermal exchange chamber and a second side of the heat-exchanging interface opposite the first side is configured to be placed in thermal contact with a surface of the heat-generating component; and"

Duan by itself or in view of Duan-I teaches [15-d] for the same reasons discussed above for [1-e] and [claim 3]. (Ex-1003, ¶131.)

[15-e] "wherein a top wall of the reservoir and the impeller cover define a pump chamber for housing the impeller, and the intermediate member and the heat exchange interface define a thermal exchange chamber, the pump chamber and the thermal exchange chamber being spaced apart from each other in a vertical direction and fluidly coupled together; and"

Duan or the modified Duan system in view of Duan-I renders obvious all of the elements of [15-e] for the reasons discussed above with respect to [1-a] through

[1-e] and [15-c]. As shown below, in both Duan and the modified Duan system in view of Duan-I, a top wall of the reservoir (accommodation chamber 21) and the impeller cover (green) define a pump chamber for housing impeller (223).

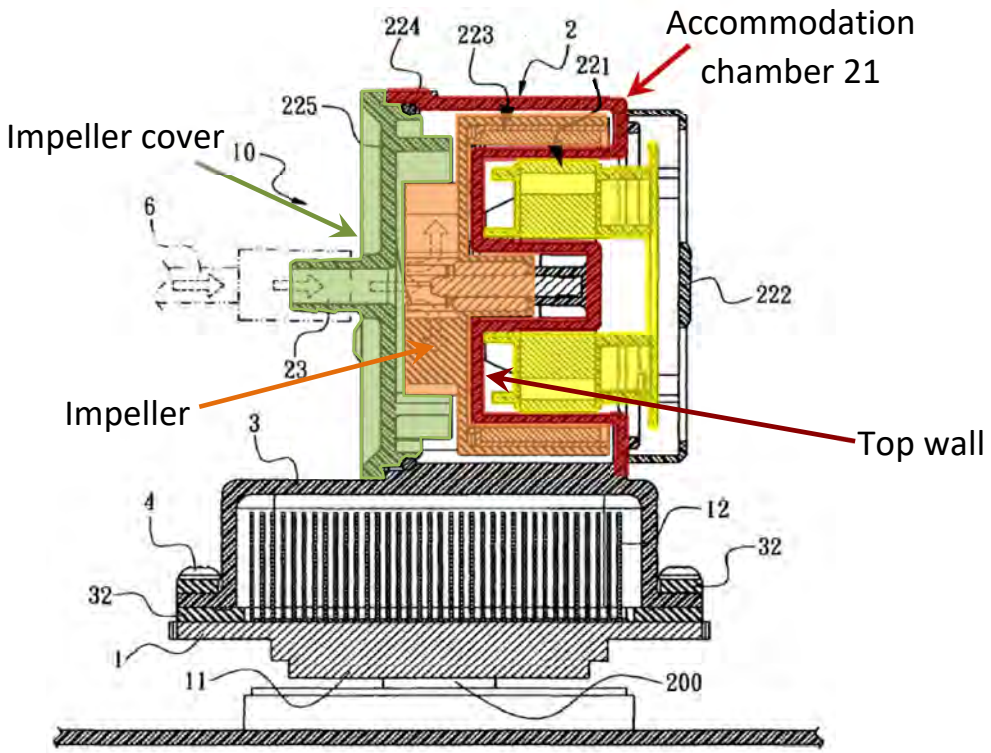

FIG. 7

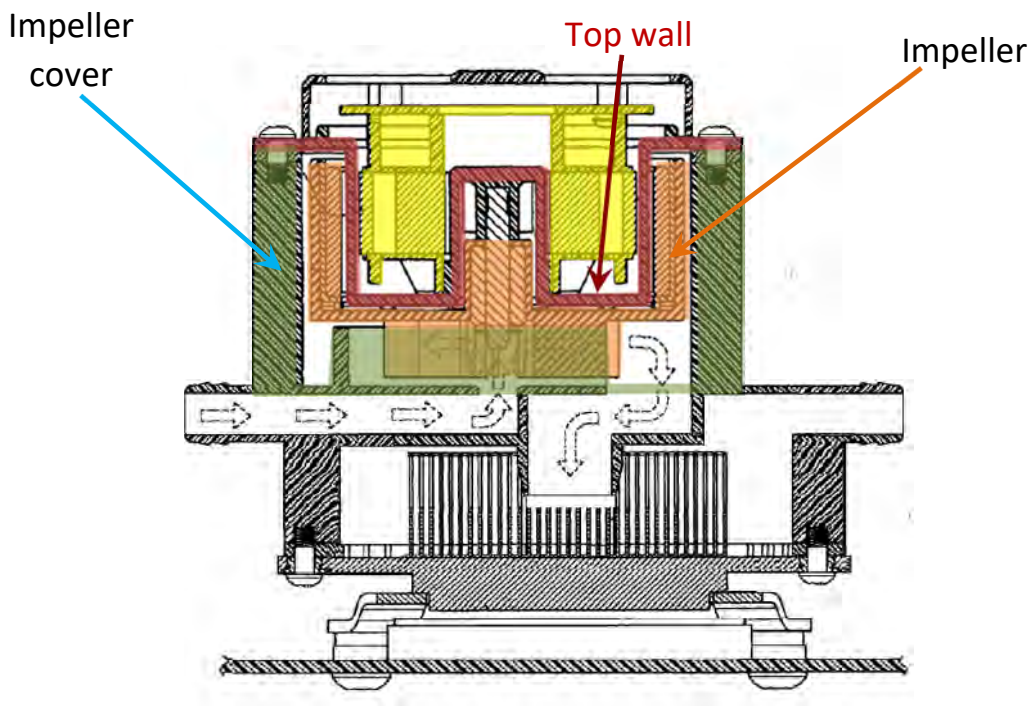

(Ex-1006, FIG. 3; Ex-1003, ¶133.)

In Duan, the intermediate member (cap 3 (blue)) and the heat-exchanging interface (cooling plate 1 and heat absorbing face 11 (gold)) define a thermal exchange chamber, as illustrated below:

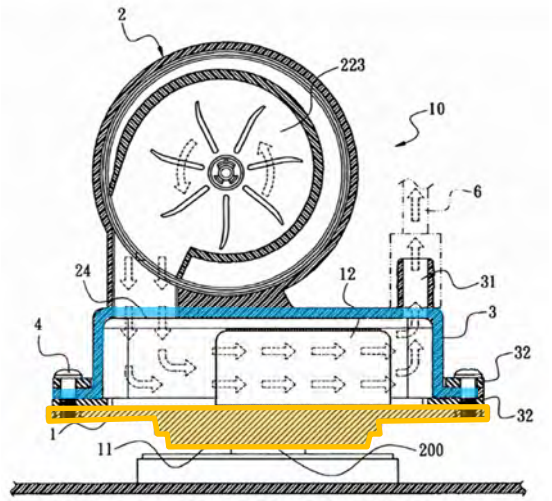

FIG. 8

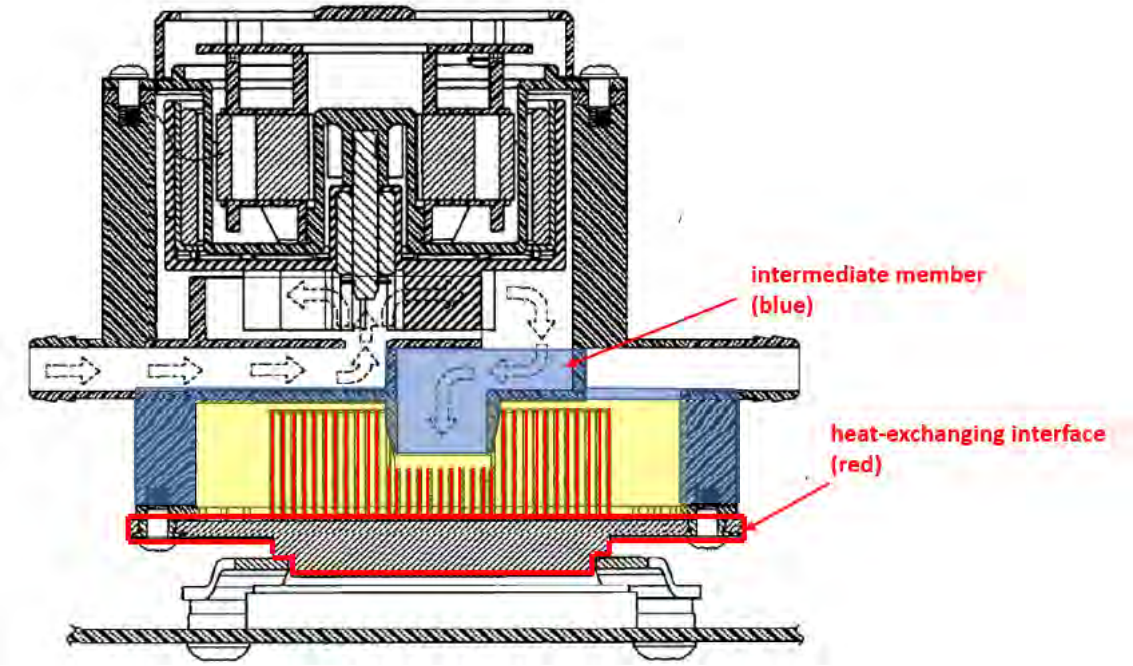

(Ex-1006, FIG. 8.) As reflected above, the pump chamber and the thermal exchange chamber are spaced apart from each other in a vertical direction and fluidly coupled together. (Ex-1003, ¶¶134-135.)

[15-f] "a liquid-to-air heat exchanger fluidly coupled to the reservoir using flexible conduits, the heat exchanger being configured to be positioned remote from the reservoir."

A POSITA would understand Duan's heat radiator to be "a liquid-to-air heat exchanger." (Ex-1003, ¶136.) Accordingly, [15-f] is disclosed or taught for the same reasons discussed above for [1-f] and [claim 9].

6. Duan teaches each limitation of claims 16-19, 21-27, and 29.

[Claim 16] "The cooling system of claim 15, wherein the impeller cover includes a first opening radially offset from a center of the impeller and the intermediate member includes a second passage that is aligned with the first opening, the first and the second opening being configured to direct the cooling liquid from the pump chamber into the thermal exchange chamber."

Duan or the modified Duan system in view of Duan-I teaches an impeller cover and an intermediate member, as discussed above for [1-c] and [15-c].

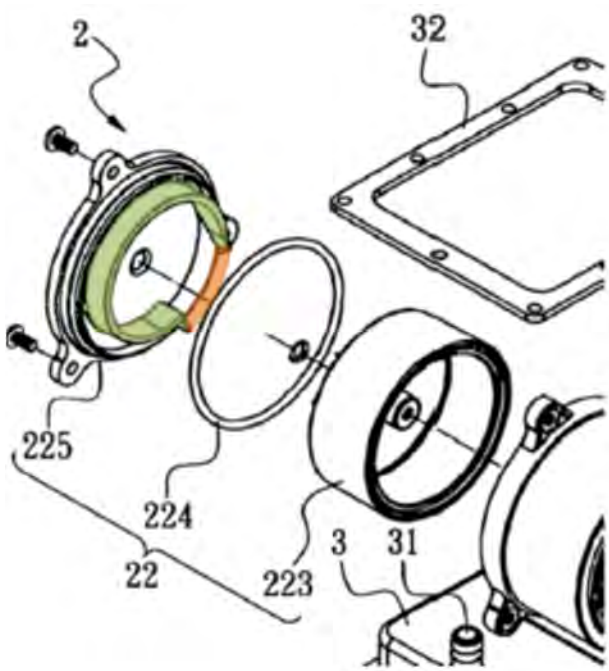

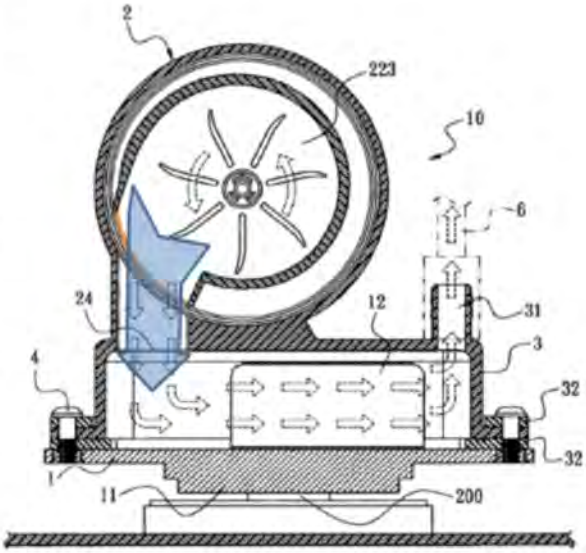

FIG. 8

Duan's impeller cover has a first opening (orange) radially offset from a center of the impeller and the intermediate member includes a second passage (blue) that is aligned with the first opening, the first and the second opening being configured to direct the cooling liquid from the pump chamber into the thermal exchange chamber (white arrows).

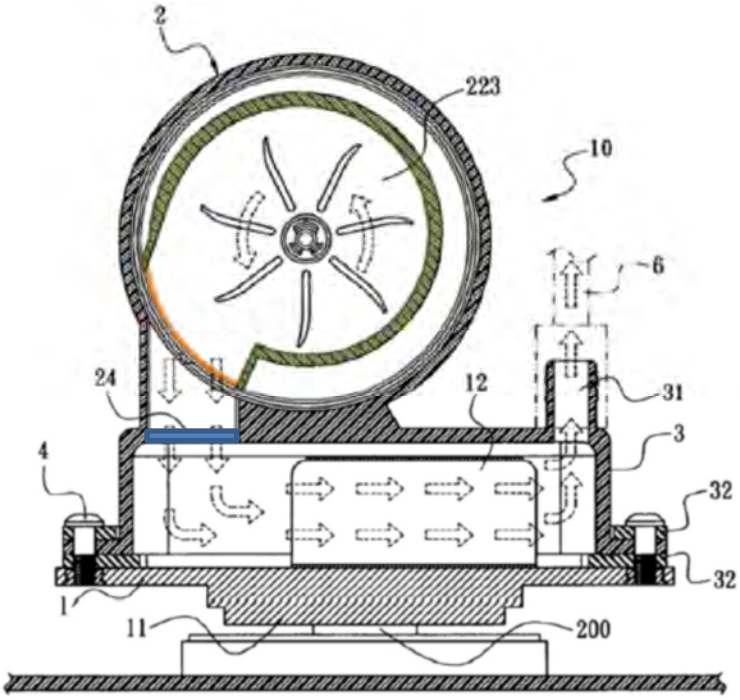

FIG. 8

(Ex-1003, ¶¶137-138.)

The modified Duan system also teaches this limitation, with the impeller cover's first opening (yellow) radially offset from a center of the impeller and the intermediate member (blue) includes a second passage (red cross hatching) that is aligned with the first opening as shown below:

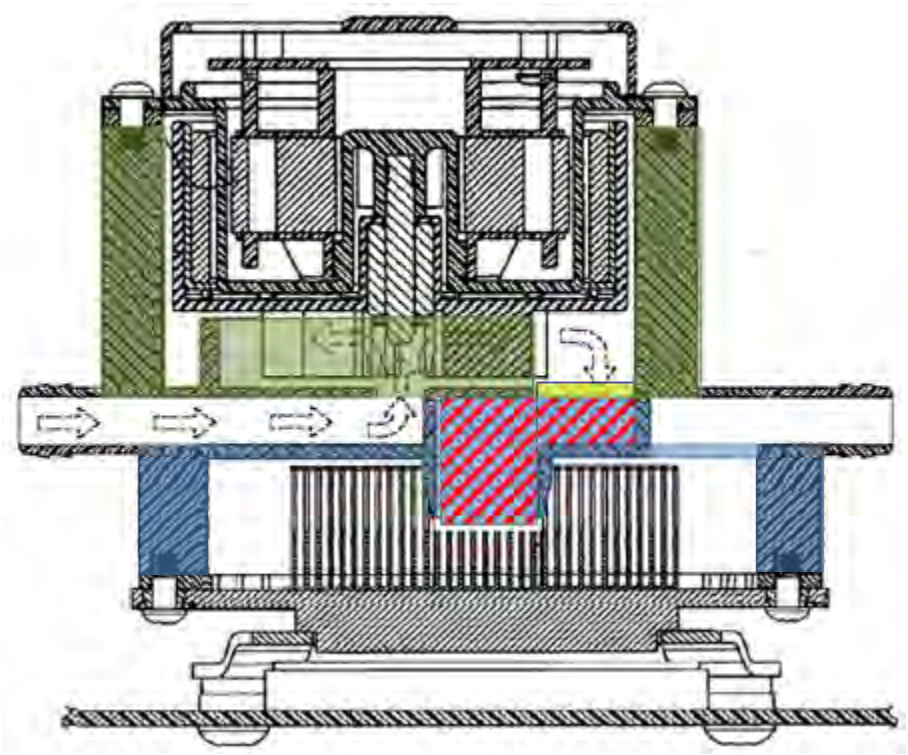

(Ex-1003, ¶139.)

[Claim 17] "The cooling system of claim 15, wherein the first side of the heat-exchanging interface includes at least one of pins or fins."

[Claim 17] taught for the same reasons discussed above for [claim 5]. (Ex-1003, ¶140.)

[Claim 18] "The cooling system of claim 15, wherein the top wall of the reservoir extends between the stator and the impeller and shields the stator from the cooling liquid in the reservoir."

[Claim 18] taught for the same reasons discussed above for [1-a], [1-b] and [claim 2]. (Ex-1003, ¶141.)

[Claim 19 / Claim 23] "The cooling system of claim [1 / 10], wherein the one or more passages include a passage configured to direct cooling liquid from the pump chamber directly into the thermal exchange chamber."

Duan or the modified Duan system in view of Duan-I teaches a passage configured to direct cooling liquid from the pump chamber into the thermal exchange chamber, as discussed above for [1-d]. (Duan also disclosed or suggested the additional requirement in claim 19 that the passage direct the cooling fluid from the pump chamber (accommodation chamber 21) "directly" into the thermal exchange chamber (the cap 3 and cooling plate 1):

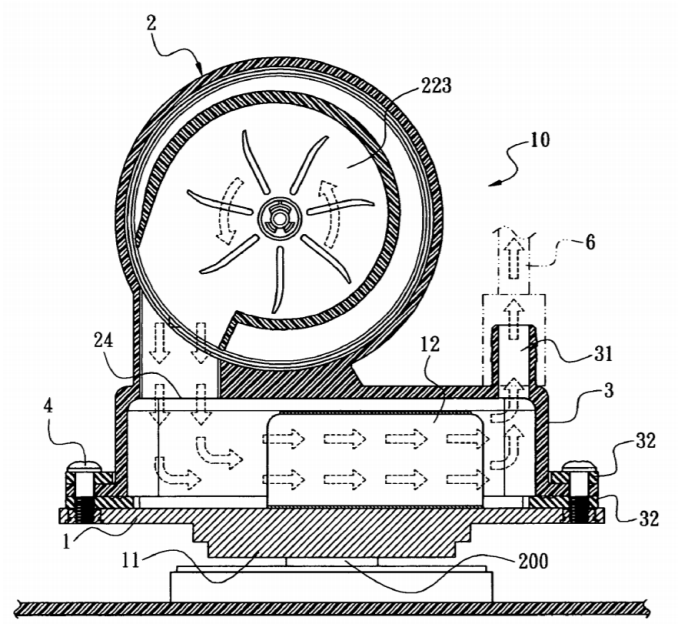

FIG. 8

(Ex-1006, FIG. 8; Ex-1003, ¶¶142-143.)

The modified Duan system also discloses that the limitation that the passage (red cross hatching) direct cooling fluid from the pump chamber (accommodation chamber 21) "directly" into the thermal exchange chamber:

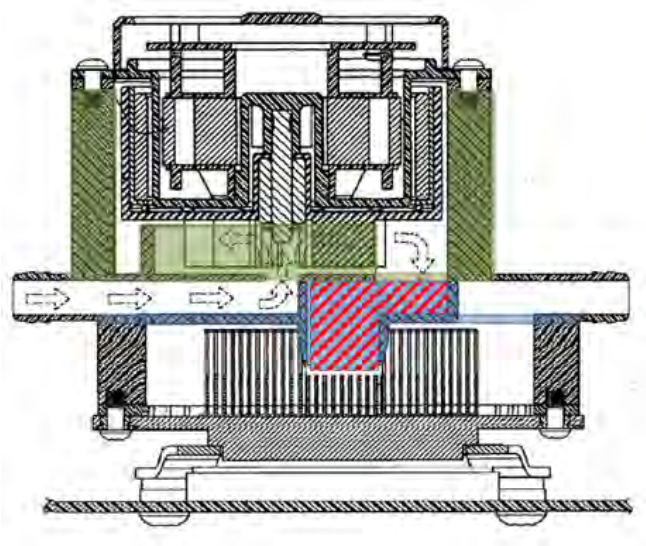

(Ex-1003, ¶144.)

<u>[Claim 21 / Claim 25 / Claim 29] "The cooling system of claim [1 / 10 / 15], wherein an entire surface of the heat-exchanging interface in contact with the cooling liquid in the reservoir forms the boundary wall of the thermal exchange chamber."</u>

Duan by itself or in view of Duan-I teaches [Claim 21], [Claim 25], and [Claim 29] for the same reasons discussed above for [1-e]. As shown below, the "entire surface of the heat-exchanging interface" (top of cooling plate 1) "*in contact with the cooling liquid*" forms the boundary wall of the thermal exchange chamber in the Duan and modified Duan systems:

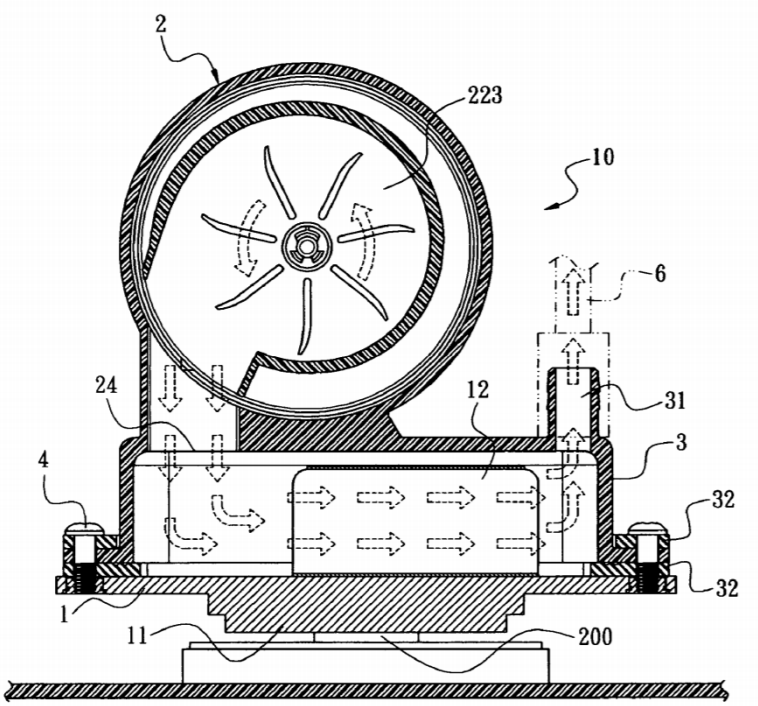

FIG. 8

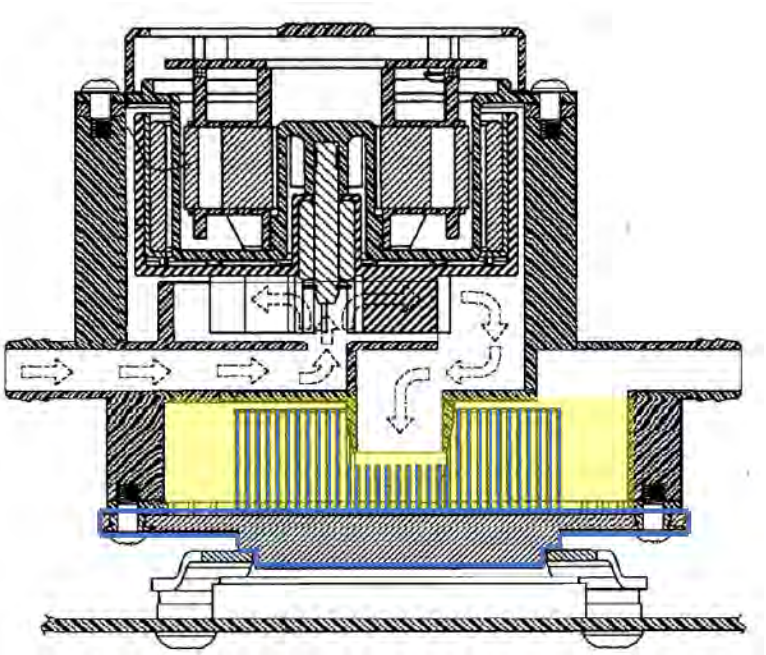

(Ex-1003, ¶¶145-146.)

[Claim 22 / Claim 26] "The cooling system of claim [1 / 10], wherein the reservoir further includes an inlet configured to direct the cooling liquid into the reservoir and an outlet configured to discharge the cooling liquid from the reservoir."

Duan or the modified Duan system in view of Duan-I teaches a reservoir adapted to pass the cooling liquid therethrough, as discussed above for [1-b]. To facilitate the flow of cooling fluid into and out of the reservoir, Duan's reservoir includes inlet 23 and outlet 31:

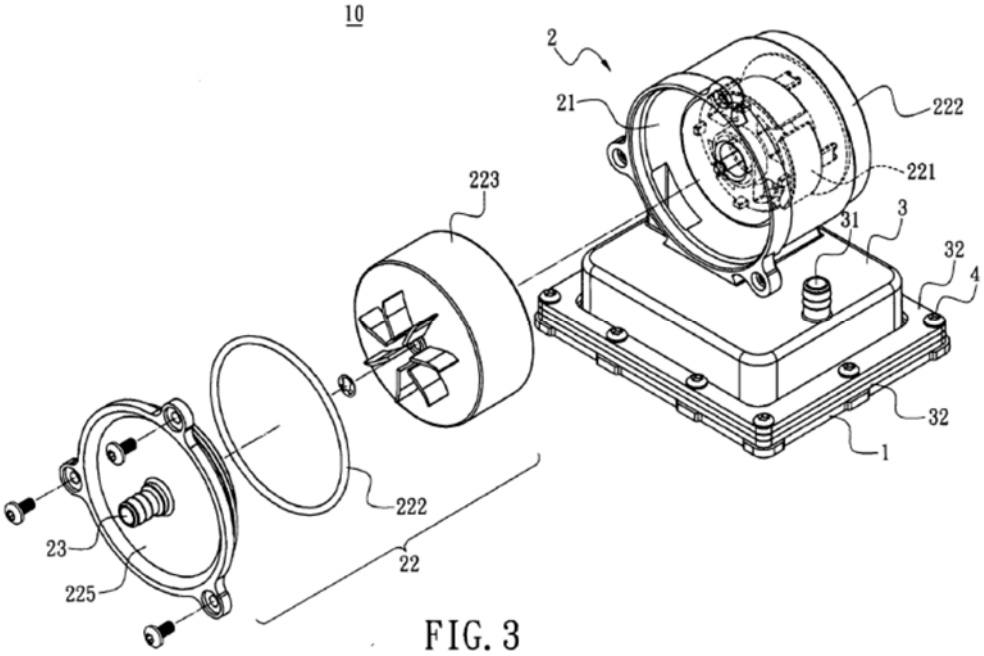

FIG. 3

(Ex-1003, ¶¶147-148; Ex-1006, [0023] ("A first liquid outlet 24 is communicated to the bottom of the accommodation chamber 21 and is enclosed by a cap 3. A second liquid outlet 31 is defined on the cap 3.").)

In reconstructing the modified Duan system, a POSITA would have had to

move inlet (23), but a POSITA would have continued to maintain an inlet and outlet into and out of the reservoir (e.g., like below) to facilitate flow through the reservoir:

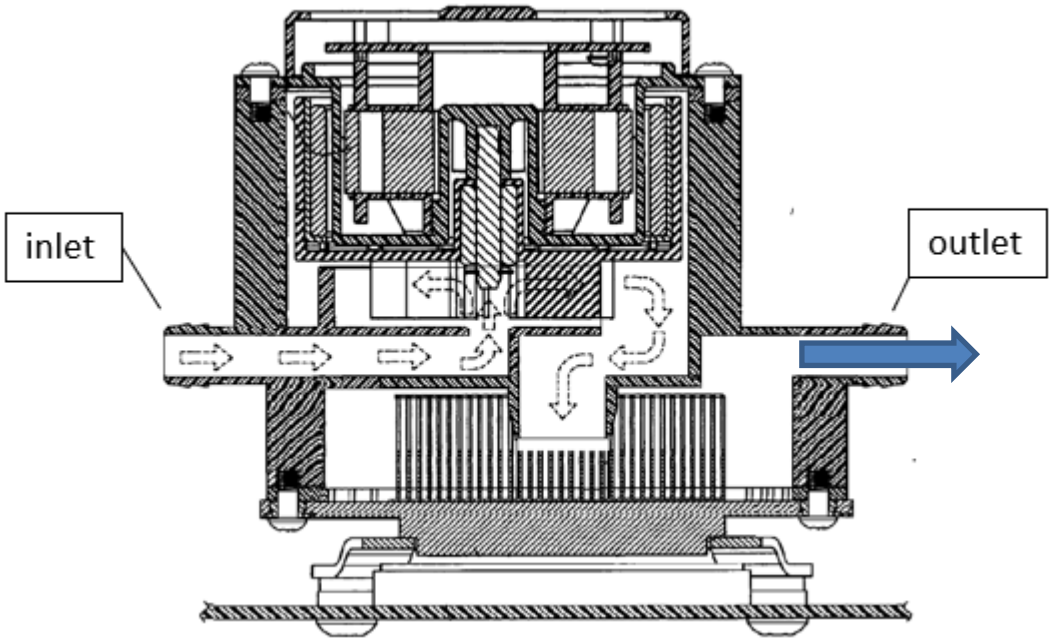

(Ex-1003, ¶149.)

[Claim 27] "The cooling system of claim 15, wherein the pump chamber and the thermal exchange chamber are fluidly coupled together by one or more passages, the one or more passages including a passage configured to direct cooling liquid from the pump chamber directly into the thermal exchange chamber."

Duan by itself or in view of Duan-I teaches [Claim 27] for the same reasons discussed above for [1-d], [claim 19] and [claim 23]. (Ex-1003, ¶150.)

7. Duan by itself or in view of Duan-I teaches each limitation of claim 30.

[30-a] "The cooling system of claim 15, wherein the pump chamber and thermal exchange chamber are fluidly coupled together by one or more passages, and"

Duan by itself or in view of Duan-I teaches [30-a] for the same reasons discussed above for [1-c] and [1-d]. (Ex-1003, ¶151.)

[30-b] "the reservoir further includes an inlet configured to direct the cooling liquid into the reservoir and an outlet configured to discharge the cooling liquid from the reservoir."

Duan by itself or in view of Duan-I teaches [30-b] for the same reasons discussed above for [claim 19] and [claim 23]. (Ex-1003, ¶152.)

B. GROUNDS 3 and 4: Claim 8 is obvious over Duan in view of Laing or Duan in view of Duan-I and further in view of Laing.

[Claim 8] "The cooling system of claim 1, wherein the heat-exchanging interface includes one of copper and aluminum."

Claim 8 is obvious over Duan in view of Laing or Duan in view of Duan-I and further in view of Laing because Laing discloses a "heat-exchanging interface formed of copper," as shown in Figure 1, reproduced and annotated below:

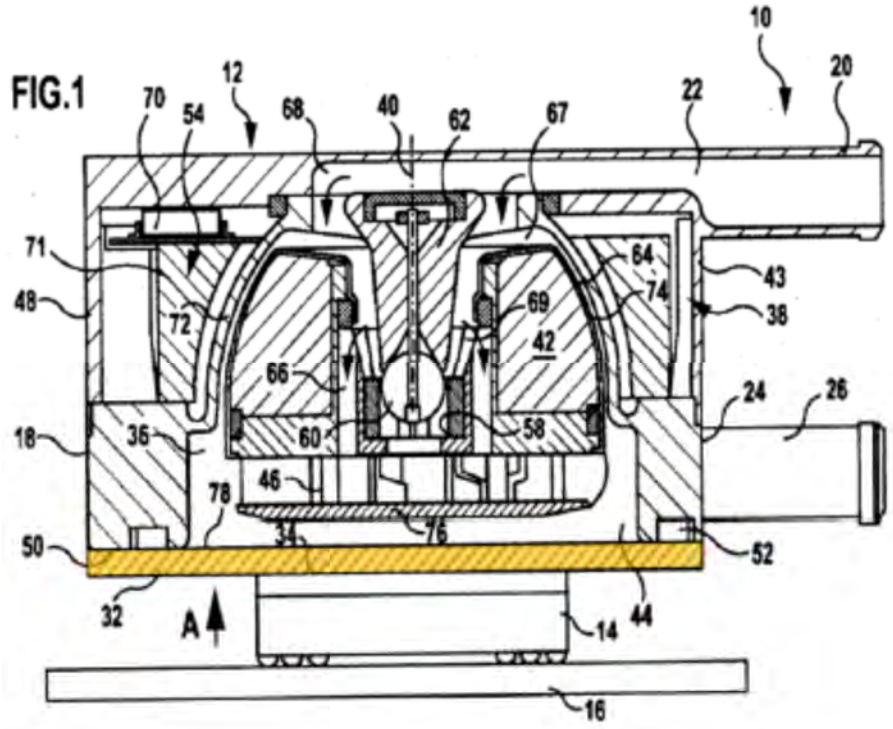

As shown above, Laing discloses that "the thermal contact element 32 is formed as a rigid plate which is made from a material with a good thermal conductivity, such as copper." (Ex-1015, [0081]; Ex-1003, ¶¶153-155.) A POSITA would have been motivated to combine Laing with Duan and/or Duan-I. Like Duan and Duan-I, Laing attempts to solve similar issues — how to cool, with liquids, the increasing temperature of increasingly powerful semiconductor devices (Ex-1015, [0002]-[0004]), which motivates a POSITA to combine the teachings of these two references. *See KSR*, 550 U.S. at 419-21; Ex-1003, ¶156.) In addition, a POSITA would further be motivated to combine the teachings of these references in light of their specific disclosures. Notably, Laing discloses that "the thermal contact element is made from a metallic material, such as copper, in order to achieve a high thermal

conductivity, in order, in turn, to allow optimum dissipation of heat from an object[.]" (Ex-1015, [0015].) Accordingly, a POSITA would have been motivated to apply Laing's copper "heat exchange interface" to Duan and/or Duan-I "to achieve a high thermal conductivity…to allow optimum dissipation of heat from" the heat generating component. (Ex-1003, ¶157.) A POSITA would know that copper is normally used in electronic cooling applications when the thermal conductivity of the aluminum is not sufficiently high and/or corrosion from water needs to be prevented and a coating is not used. (*Id.*)

C. GROUND 5: Claims 1-30 are rendered obvious over Batchelder in view of Duan.

1. Batchelder in view of Duan teaches each limitation of claim 1 and renders it obvious.

[1-PRE]

Batchelder in view of Duan teaches [1-PRE]. (Ex-1003, ¶¶158-160.) Batchelder teaches that "[t]he primary objective of this invention is to provide a low cost high reliability heat exchange apparatus that incorporates a composite substrate containing flow channels and a heat transfer fluid, providing low thermal resistance cooling to high density sources." (Ex-1008, 2:40-45; *see also id.* at 1:5-10 (discussing "our ability to get that waste heat out of semiconductor circuits").)

[1-a] "a double-sided chassis adapted to mount a pump configured to circulate a cooling liquid, the pump comprising a stator and an impeller, the impeller being positioned on the underside of the chassis and the stator being positioned on the upper side of the chassis and isolated from the cooling liquid;"

Batchelder in view of Duan renders [1-a] obvious. As shown below, Batchelder teaches a double-sided chassis (top sheet 212) adapted to mount a pump configured to circulate cooling liquid, the pump having an impeller (54) positioned on the underside of the chassis (212):

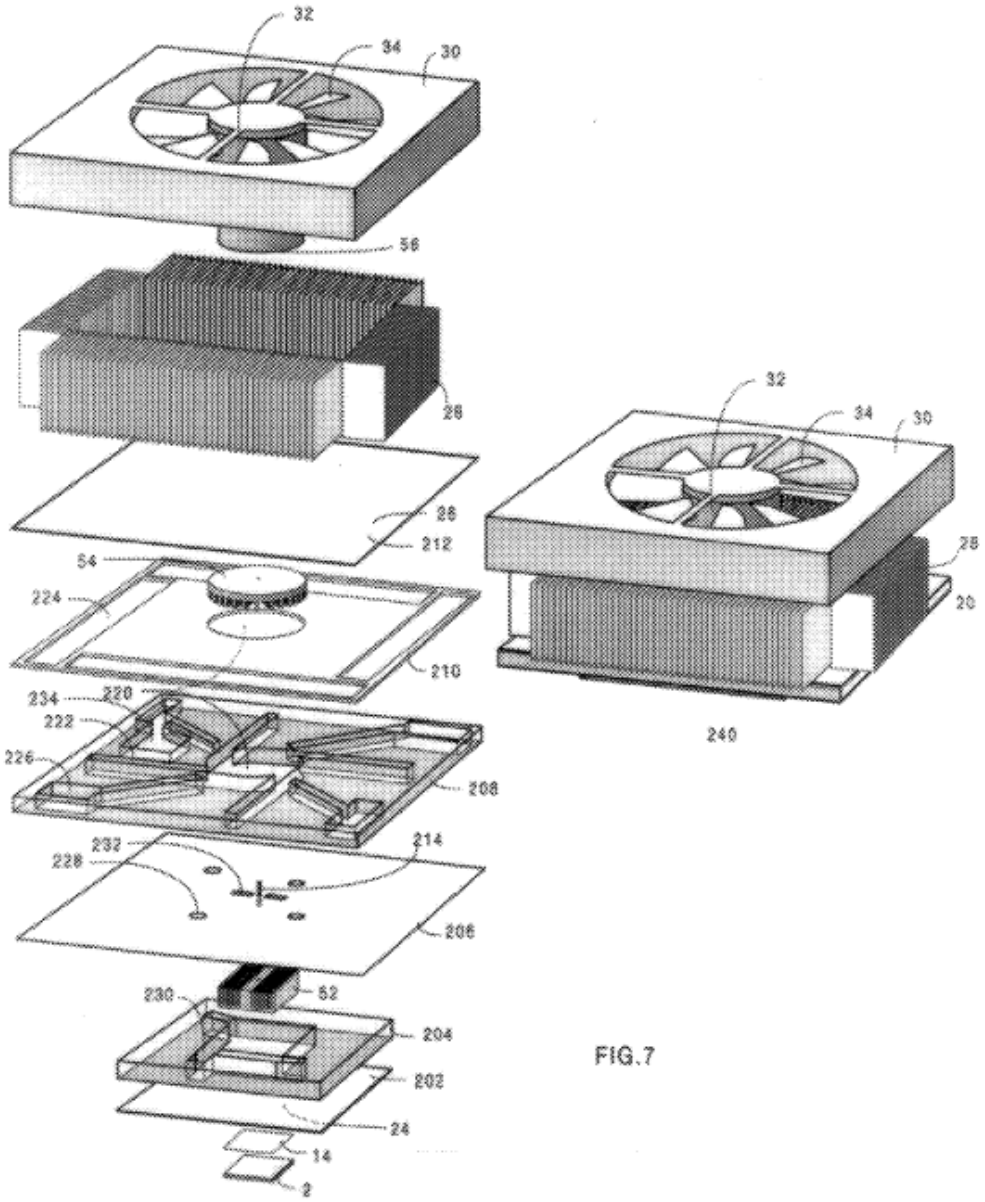

FIG.7

(Ex-1008, 5:26-28 ("[T]he impeller (54) is a centripetal or centrifugal pump that impels the heat transfer fluid to circulate as indicated (60)."), 3:17-19.)

"Fin means (28) attaches to the upper surface (26) of the top sheet (212). A fan housing (30), rotor (32), and fan blades (34) are attached to the top of the fin means, rotatably suspending a permanent magnet (56) adjacent to the impeller (54)."

(Ex-1008, 7:55-59.) Reading Batchelder, a POSITA would have understood that the rotatable impeller 54 is driven by the magnetic field emanated from the permanent magnet 56 attached to the rotor 32 that is part of the fan motor. (*Id.*, 6:5-18; Ex-1003, ¶164.) A POSITA would have also understood that the fan motor includes inside the fan housing 30 a stator (not shown), which is the fan motor's stationary part that drives the rotor 32. (*Id.*) That is, a POSITA would have understood that the fan motor's stator in the fan housing drives the rotor 32, which in turn drives the permanent magnet 56, which in turn drives the impeller 54. (Ex-1008, 6:12-14.) Thus, in Batchelder, the impeller 54 is not directly driven by the stator. Rather, the impeller is indirectly driven by the stator, which a POSITA would have understood can be improved upon. (Ex-1003, ¶164.) This is at least because the control over the impeller is better if driven directly by the stator, which can also provide a stronger, more effective rotating magnetic field. (*Id.*) Thus, a POSITA would have been motivated to adopt the location of Duan's stator (coil stage 221) by relocating Duan's stator to the top of the top sheet 212 and using the stator to drive both the impeller 54 and the permanent magnet 56 attached to the rotor 32. The magnet 56 can be adapted to be a mirror image of the permanent magnet in 54. The stator can then drive both of them directly. The magnet 56 will now drive the rotor 32 to operate the fan. The modified mechanism can still achieve the goal in Batchelder to drive the impeller and fan using the same motor, but can now drive both the impeller 54

and the fan's magnet 56 attached to the rotor 32 directly with the stator. A POSITA would have had a reasonable expectation of success because it is a straightforward rearrangement of the motor components that requires only a few simple modifications, such as shortening the rotor 32 to allow space for the stator and adapting the permanent magnet 56 to be directly driven by the rotating magnetic field, as shown below:

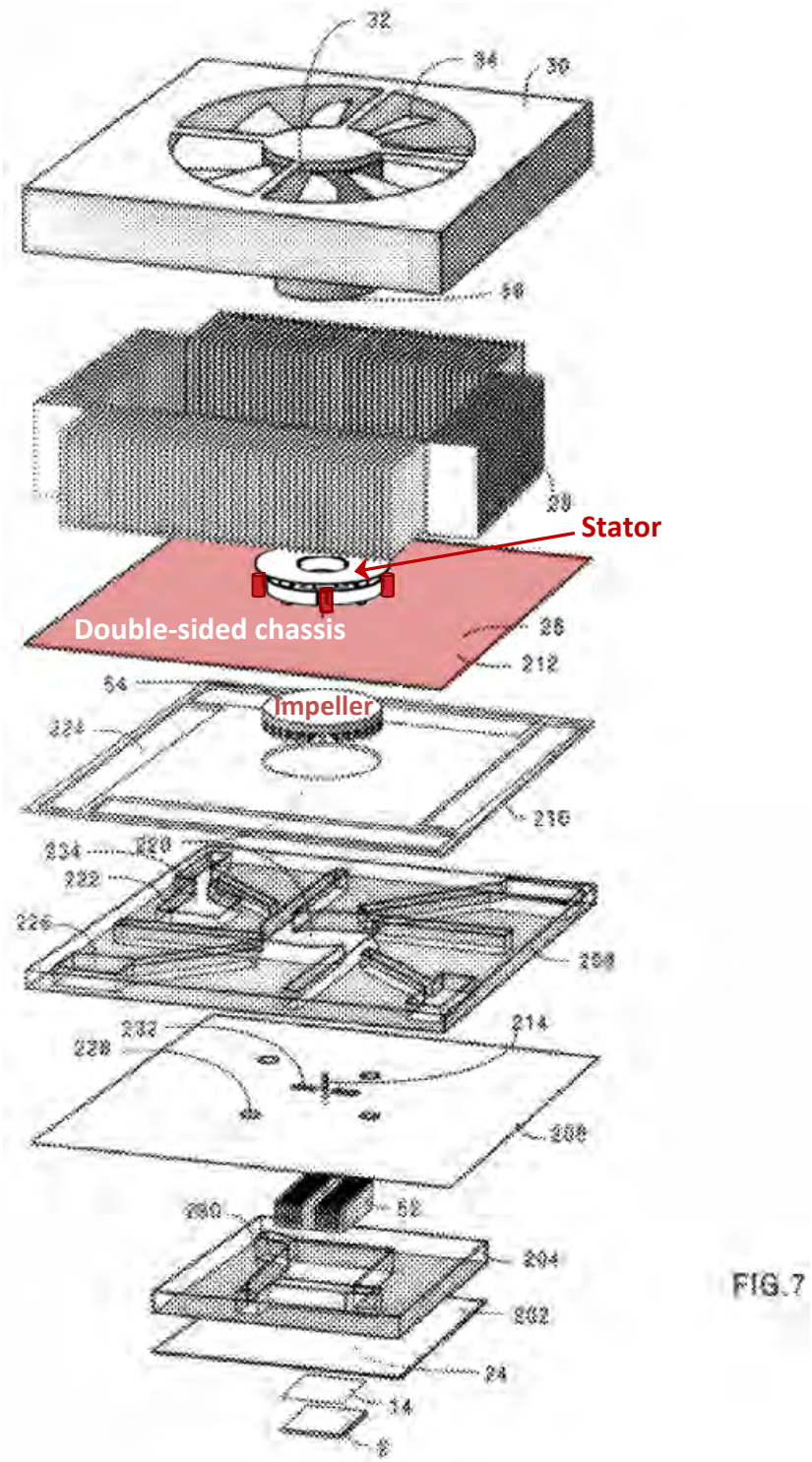

FIG.7

(Ex-1003, ¶164.) As shown above, it would have been obvious to secure a stator (e.g., coil stage 221 in Duan) onto top sheet 212 with integrated fixtures to drive both the impeller 54 and the fan's magnet 56 directly and concurrently. The stator is positioned on the upper side of the chassis (top sheet 212) and isolated from the cooling liquid, just like the coil stage 221 in Duan. (Ex-1003, ¶165.) This design would have been consistent with Batchelder's objective "to provide a heat sink design for electronic components that uses a single motor to impel atmospheric motion and the motion of an additional heat transfer fluid." (Ex-1008, 2:52-55.)

[1-b] "a reservoir adapted to pass the cooling liquid therethrough, the reservoir including:"

Batchelder in view of Duan teaches [1-b]:

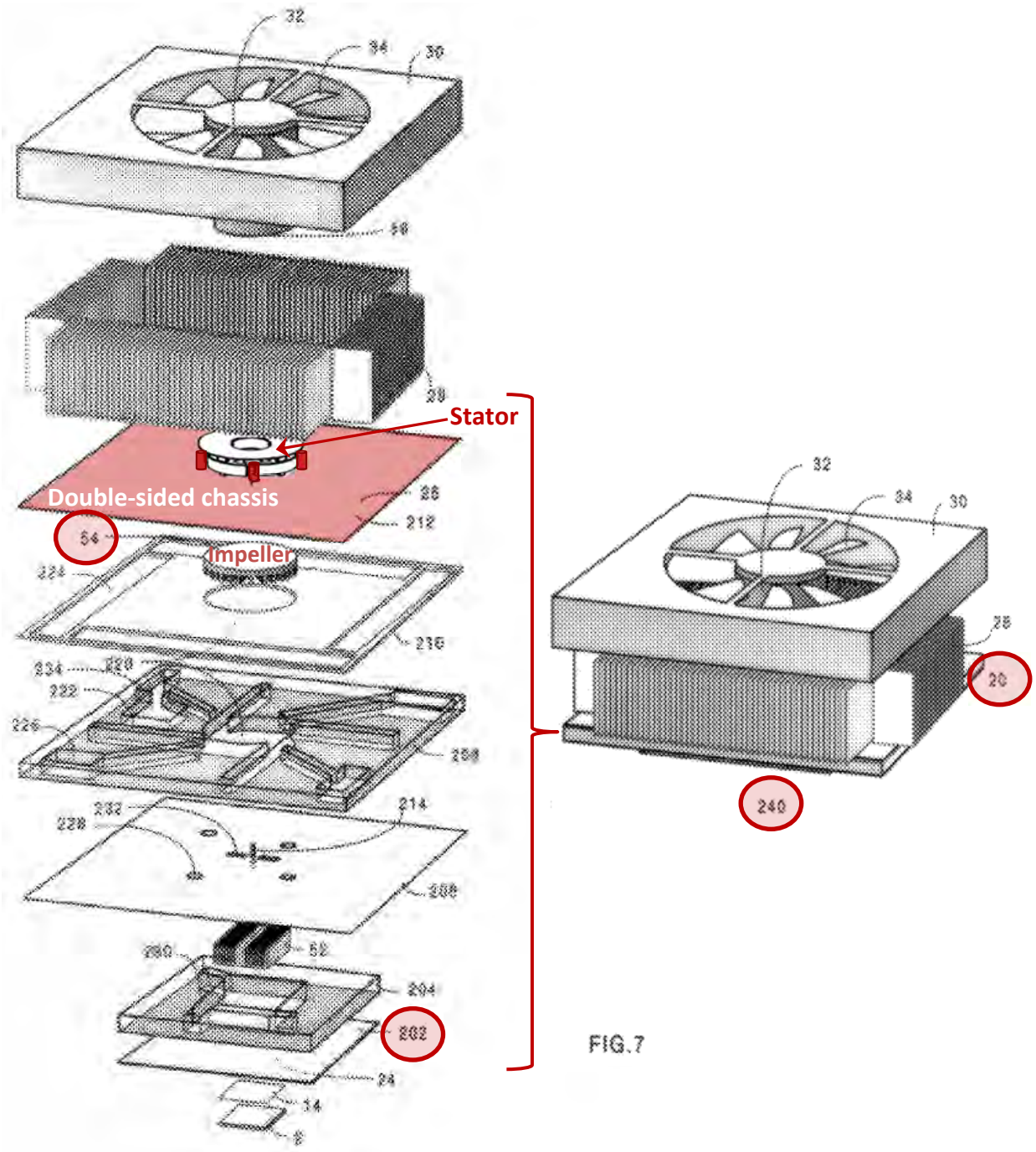

(Batchelder FIG. 7 (modified).) As shown, the active spreader plate of Batchelder teaches a "reservoir" that is a *single* receptacle defining a flow path and configured to circulate a cooling liquid therethrough. (Ex-1003, ¶167.) This active spreader

plate is described as a "geometry" (Ex-1008, 1:65) that can take various shapes such as "a large hemispherical shell" (*id.*, at 3:49-51). Thus, this active spreader plate 20 is a single, unitary receptacle that defines a fluid flow path (60), *i.e.*, a "reservoir" as claimed by the '764 patent. (*See* Ex-1003, ¶168; Ex-1008, 5:26-28.) This is because Batchelder discloses that "[t]he lower stamped plate (204), the medial sheet (206), the upper stamped plate (204), the channel forming sheet (210), and the top sheet (212) [in FIG. 7] are preferably formed from plastic" and "assembled with…ultrasonic bonding, solvent bonding, or welding." (Ex-1008, 7:52-55, 8:4-8.) A POSITA would have understood that these plastic components, once combined together using "ultrasonic bonding, solvent bonding, or welding[,]" are fused together into a continuous, seamless "single receptacle defining a fluid flow path" that is a permanently unitary structure. (*See* Ex-1003, ¶168; Ex-1008, 8:8-12.) Batchelder further discloses that "those skilled in the art will recognize that the individual components of the active spreader plate could be molded, and that several of the described components can be functionally combined if the components are molded." (*See* Ex-1003, ¶168; Ex-1008, 8:8-12.) That is, a POSITA would have understood that, e.g., the lower stamped plate (204), the medial sheet (206), and the upper stamped plate (204) can be combined into a unitary "single receptacle" structure with injection molding, as shown below. (*See* Ex-1003, ¶169; Ex-1008, 8:8-12.)

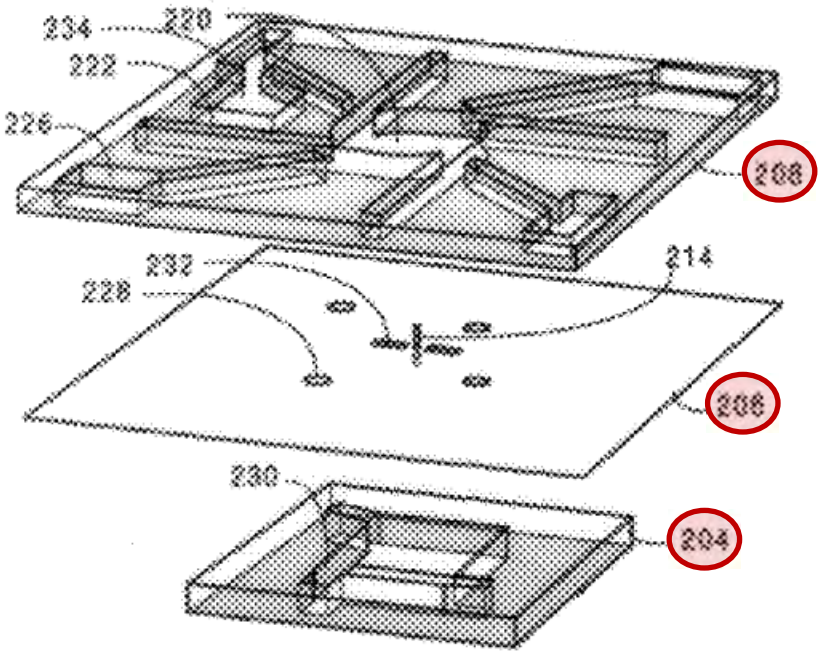

(Ex-1008, FIG. 7 (annotated excerpt).) After the impeller 54 is placed in the coaxial cavities (220) (Ex-1008, 7:46-48), the channel forming sheet (210) and the top sheet (212) in FIG. 7 can be further combined with this "single receptacle" using "ultrasonic bonding, solvent bonding, or welding" to fuse all of them together into a continuous, seamless, and permanently unitary structure that, as a whole, can be the "reservoir." (*See* Ex-1003, ¶170; Ex-1008, 8:8-12.)

[1-c] "a pump chamber including the impeller and formed below the chassis, the pump chamber being defined by at least an impeller cover having one or more passages for the cooling liquid to pass through"

Batchelder in view of Duan teaches [1-c]:

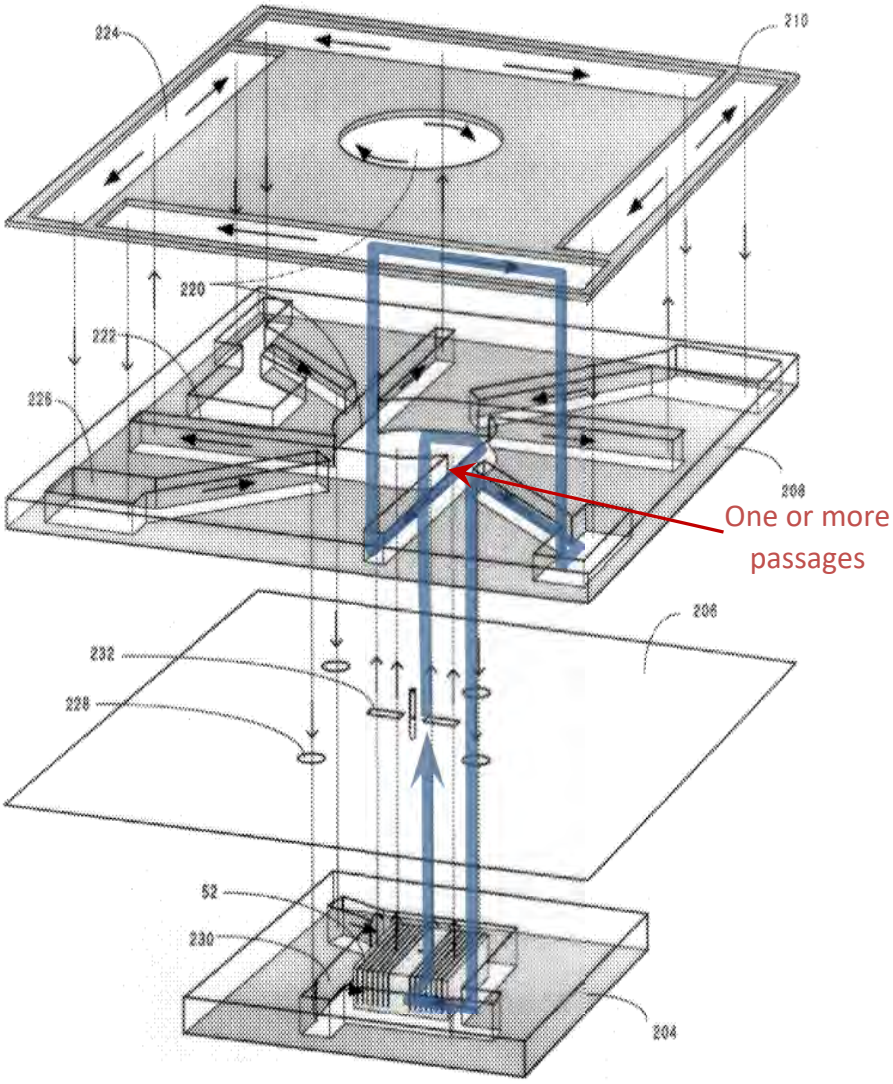
224
210
220
222
226
208
One or more passages
206
232
228
52
230
204

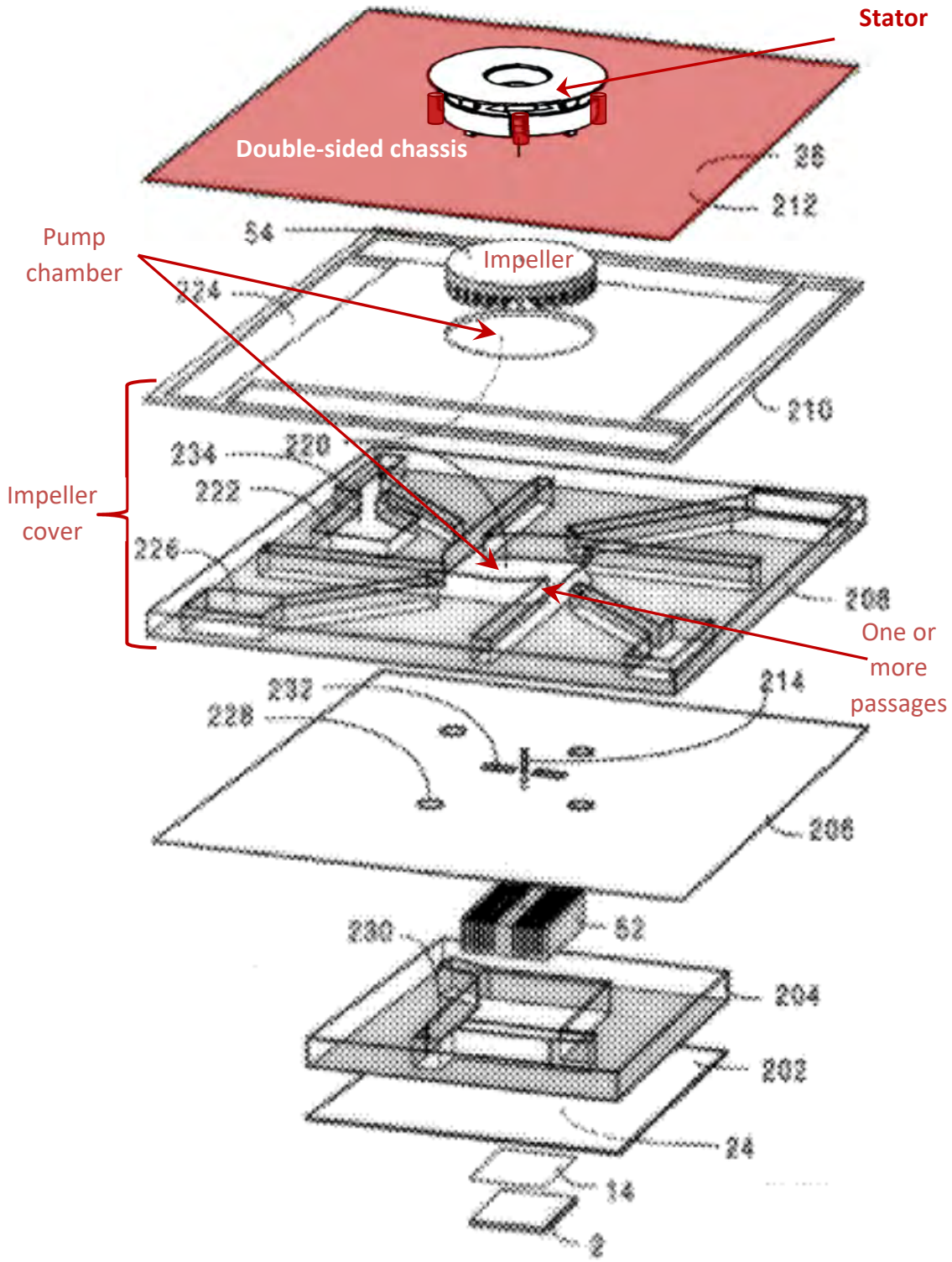
Stator
Double-sided chassis
Pump chamber
Impeller
Impeller cover
One or more passages
38
212
54
224
210
234
220
222
226
208
232
214
228
206
230
52
204
202
24
14
2

(Ex-1008, FIGS. 7 and 8 (modified, annotated excerpt).) As shown, Batchelder's "reservoir" has a pump chamber—i.e., the space in the channel forming sheet 210 and the upper stamped plate 208—including an impeller (54) defined by at least an impeller cover (channel forming sheet 210 and the upper stamped plate 208) having one or more passages for cooling liquid to pass through. (Ex-1003, ¶¶171-172.)

[1-d] "a thermal exchange chamber formed below the pump chamber and vertically spaced apart from the pump chamber, the pump chamber and the thermal exchange chamber being separate chambers that are fluidly coupled together by the one or more passages; and"

Batchelder in view of Duan teaches [1-d]:

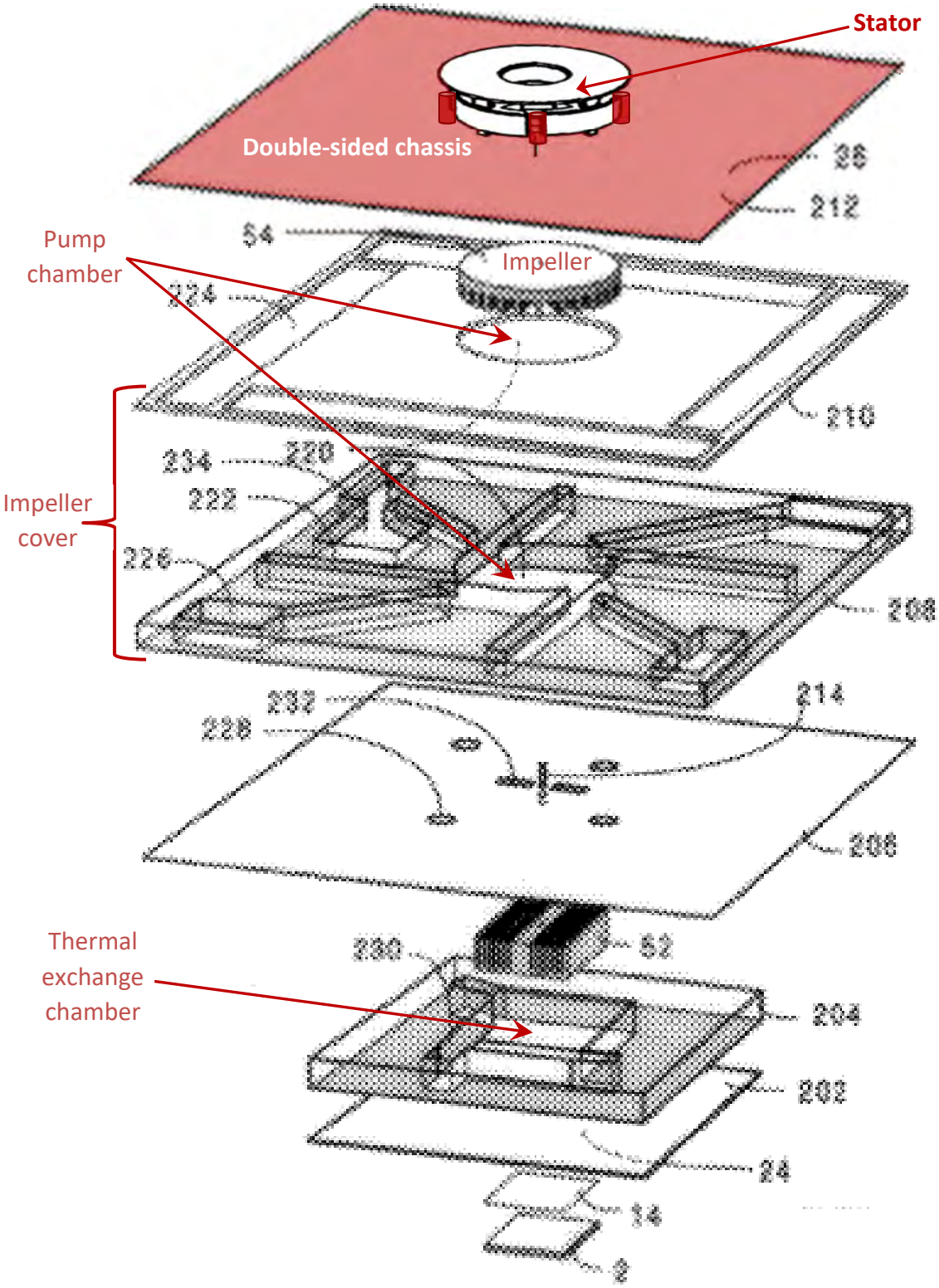
Stator
Double-sided chassis
36
212
54
Impeller
Pump chamber
224
210
234
220
222
Impeller cover
226
208
232
214
228
206
Thermal exchange chamber
230
52
204
202
24
14
2

(Ex-1008, FIG. 7 (annotated excerpt).) In addition to a pump chamber (discussed above), Batchelder also teaches a thermal exchange chamber (or compartment)—i.e., the center space in the lower stamped plate 204 in FIGS. 7 and 8. The pump and thermal exchange chambers are vertically displaced and separated from each other by medial sheet 206, and are fluidly coupled by one or more passages (holes 228 and slots 232). (Ex-1003, ¶¶173-174.)

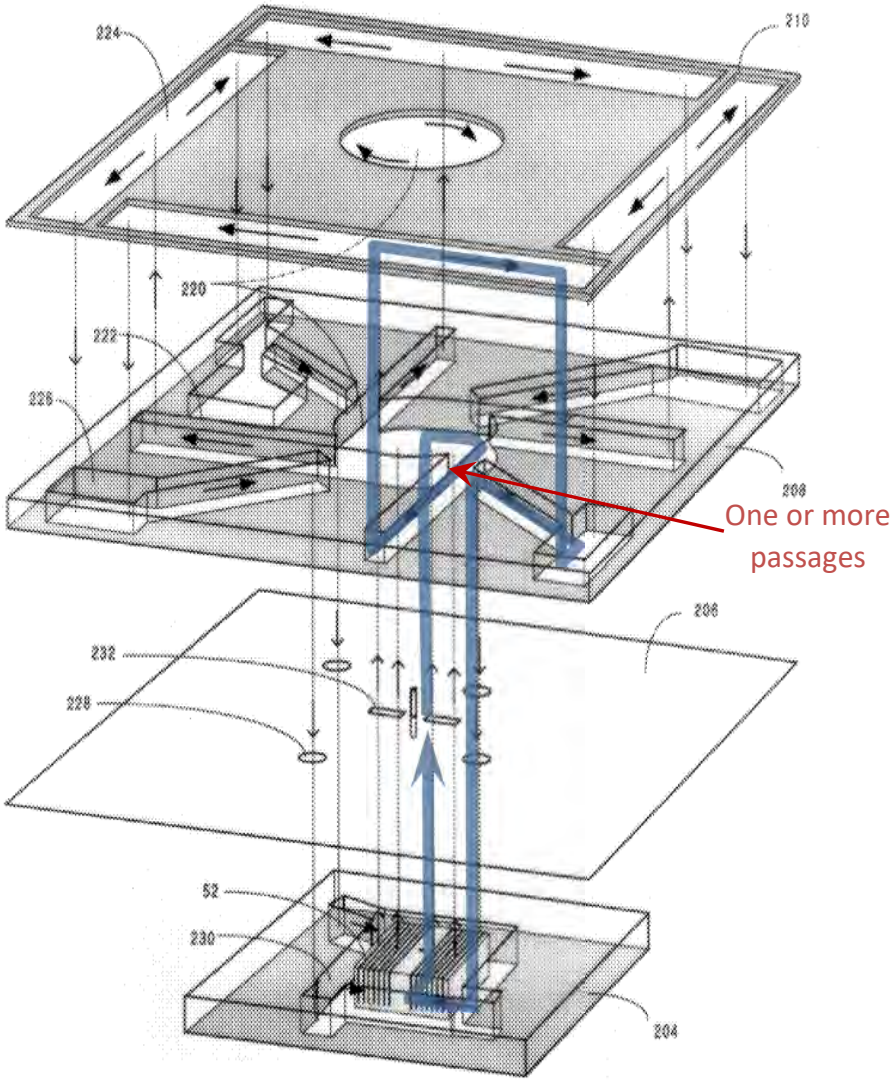

[1-e] "a heat-exchanging interface, the heat-exchanging interface forming a boundary wall of the thermal exchange chamber, and configured to be placed in thermal contact with a surface of the heat-generating component; and"

Batchelder in view of Duan teaches [1-e]:

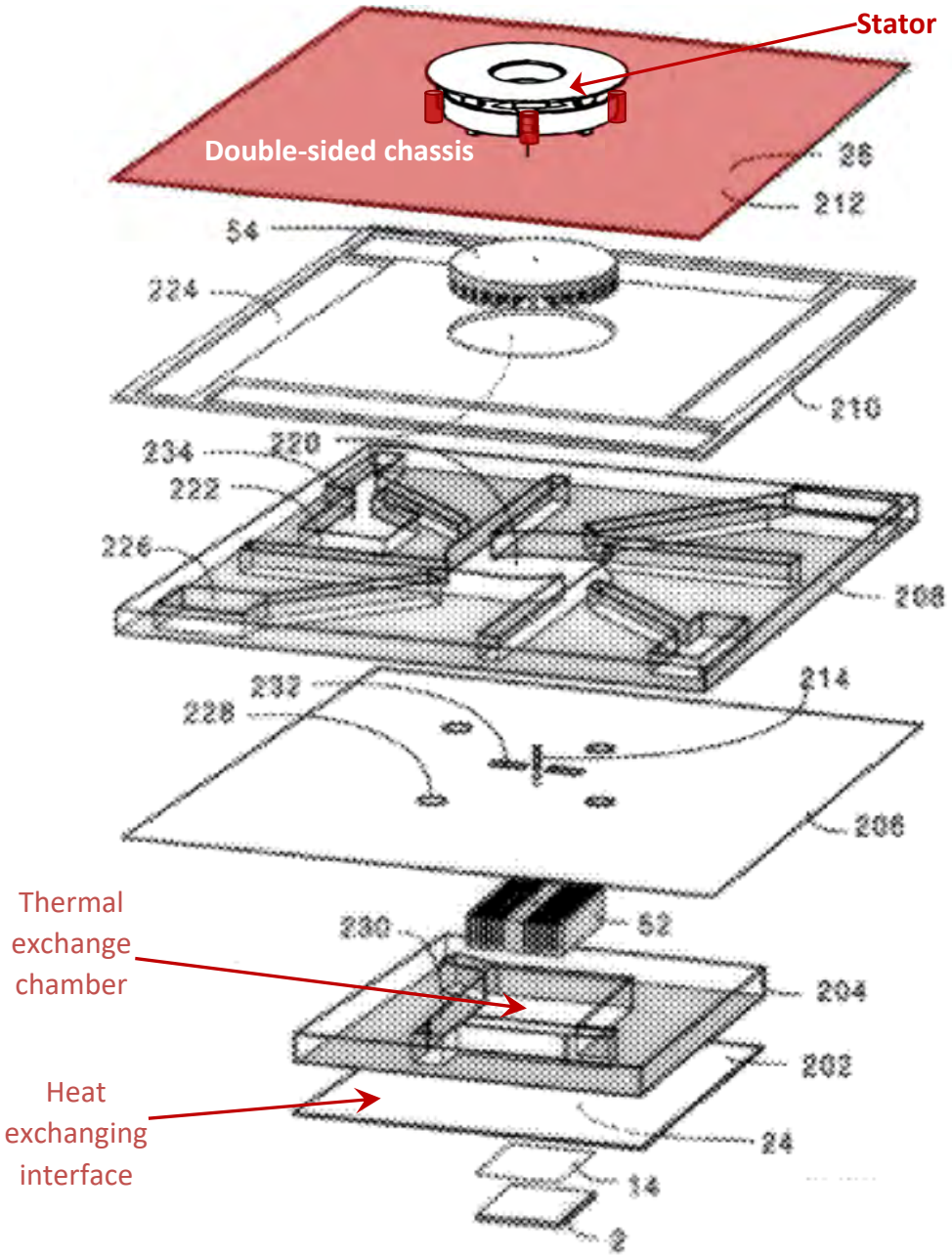

(Ex-1008, FIG. 7 (annotated excerpt).) Batchelder's heat-exchanging interface

(bottom surface 24) forms a boundary of the thermal exchange chamber. It is also configured to be placed in thermal contact with a surface of the heat-generating component (heat source 2). (*Id*., 7:30-33 ("Heat from the heat source passes through the bottom surface (24) of the bottom sheet (202) and into a fin means (52) attached to the top surface of the bottom sheet (202)."); Ex-1003, ¶175-177.)

<u>[1-f] "a heat radiator fluidly coupled to the reservoir and configured to dissipate heat from the cooling liquid."</u>

Batchelder does not expressly disclose a "heat radiator," but Duan does:

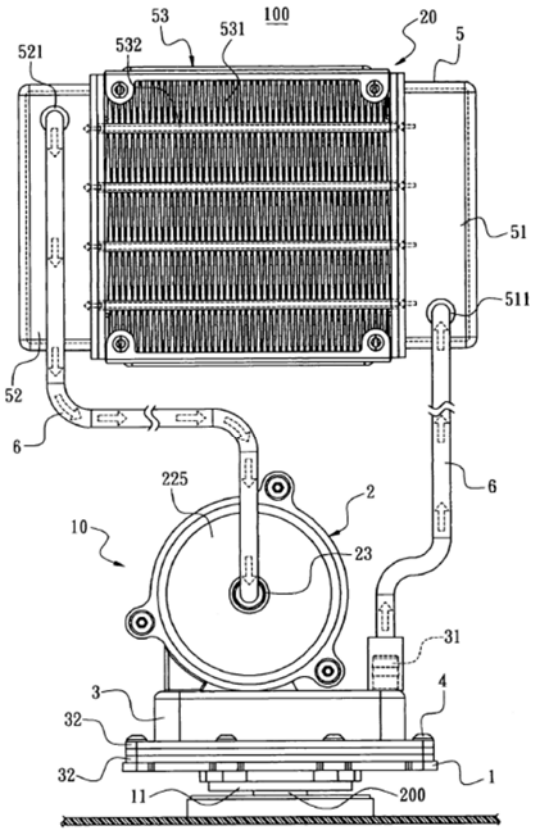

FIG. 6

(Ex-1006, FIG. 6, [0025]; *see also* Ground 1, [1-f] above.)

It would have been obvious to connect Batchelder's heat spreader plate to a radiator, a well-known component used to transfer thermal energy (e.g., heat) from one medium to another, like the one taught in Duan. (Ex-1003, ¶180.) As the cooling liquid in the lower chamber heats up, a POSITA would have been motivated to use an external radiator to help further cool the heated cooling liquid, which is a conventional technique known to a POSITA, before the cooling liquid returns to the pump. (*Id.*)

A POSITA would have been motivated to combine Duan with Batchelder to further increase heat management efficiency by using an external radiator that cools the heated cooling liquid via "heat-dissipating fins." (Ex-1006, [0025].) This is because the technique allows heat to escape the system more efficiently. (Ex-1003, ¶181.) Adding a radiator to Batchelder would have been an obvious modification to improve Batchelder's objective of cooling electronic components. (*Id.*; Ex-1008, 2:46-50.)

A POSITA would have also been motivated to modify Batchelder in view of Duan to add an external radiator when the heat load is too high for Batchelder's existing heat spreader plate. (Ex-1003, ¶182.) Because there is limited real estate near a heat-generating component for dissipating heat, and depending on how much heat it dissipates, the heat spreader plate by itself may not be sufficient to handle the heat. (*Id.*) The active heat spreader plate used by Batchelder would eventually be

insufficient to extract the heat as the heat-generating components continued to advance and produce more heat, as suggested by Batchelder. (Ex-1008, 1:34-38 ("The thermal power density emerging from the chip will be so high in ten years than even copper or silver spreader plates will not be adequate.")) Indeed, the top sheet (212) in Batchelder is "preferably formed from plastic" to be "assembled with [the rest of the active heat spreader plate's plastic structure with] ultrasonic bonding, solvent bonding, or welding." (Ex-1008, 7:52-55, 8:4-8.) A POSITA would have understood that the heat dissipation through the plastic top sheet (212) would eventually be insufficient, which is a further motivation to add an external radiator such as those in Duan to increase heat dissipation in FIGS. 7 and 8 of Batchelder. (Ex-1003, ¶182.) FIG. 8 shows the flow paths of the embodiment in FIG. 7 in detail, as follows:

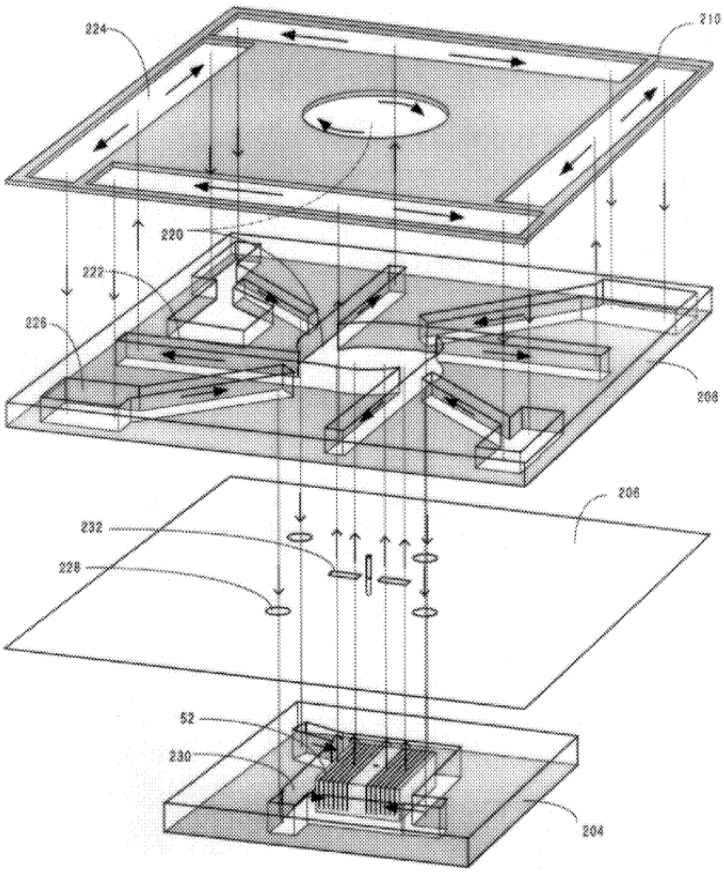

(Ex-1008, FIG. 8.) A POSITA would have understood that there are at least four exemplary looped flow paths in FIG. 8 above, as shown below:

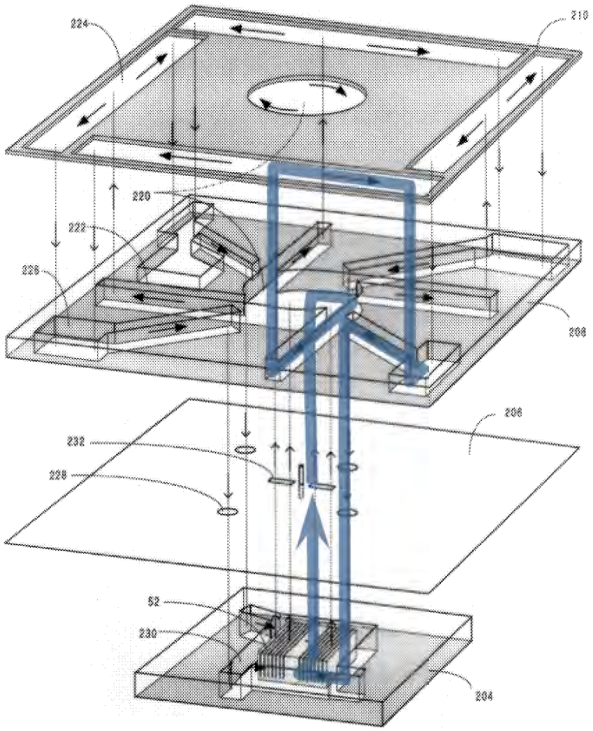
224
210
220
222
226
208
206
232
228
52
230
204

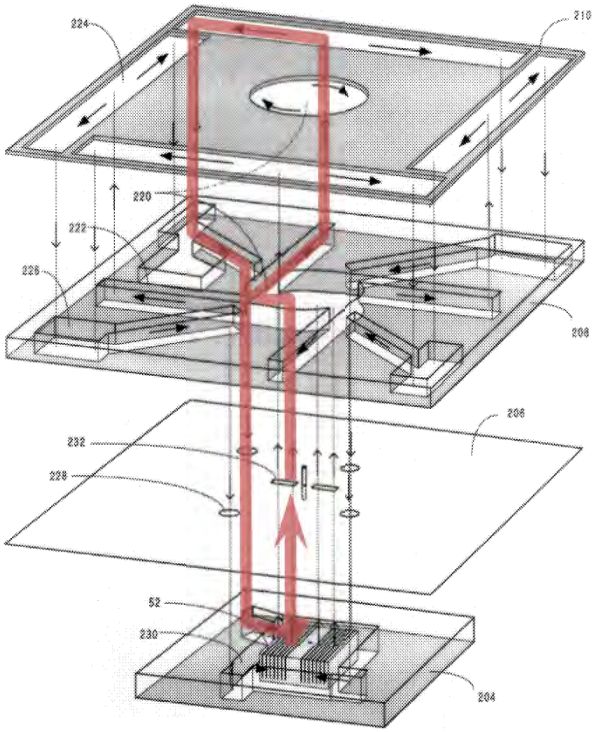
224
210
220
222
226
208
206
232
228
52
230
204

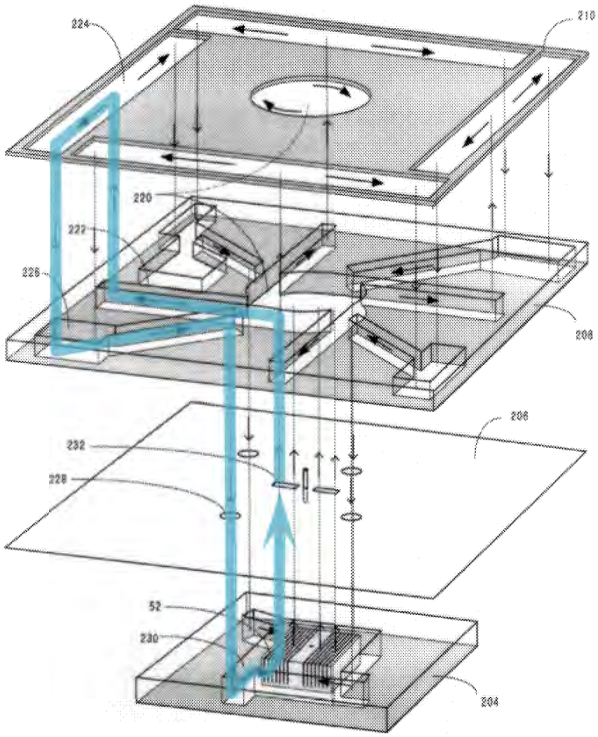
224
210
220
222
226
208
206
232
228
52
230
204

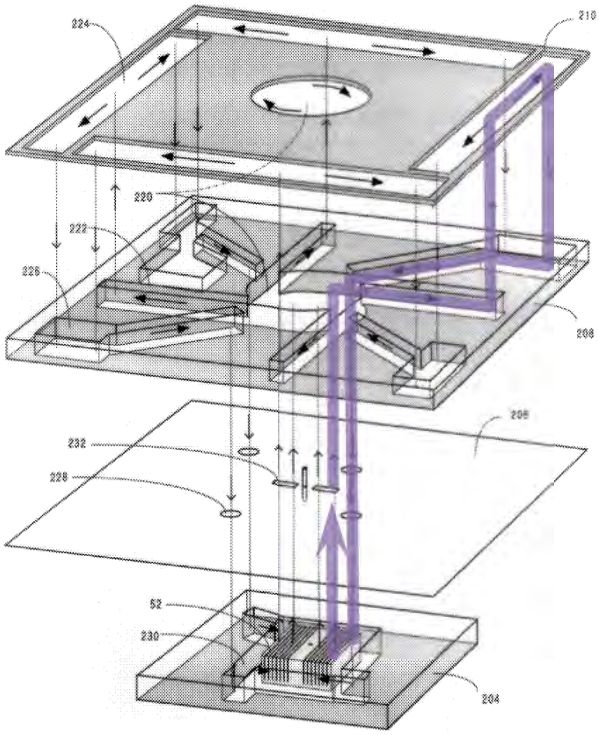
224
210
220
222
226
208
206
232
228
52
230
204

(Ex-1003, ¶183.) A POSITA would have known how to, and would have been motivated to, modify one of the four exemplary looped flow paths in Batchelder's Figure 8 in view of Duan to connect Batchelder's "reservoir" to an external radiator with a reasonable expectation of success as follows:

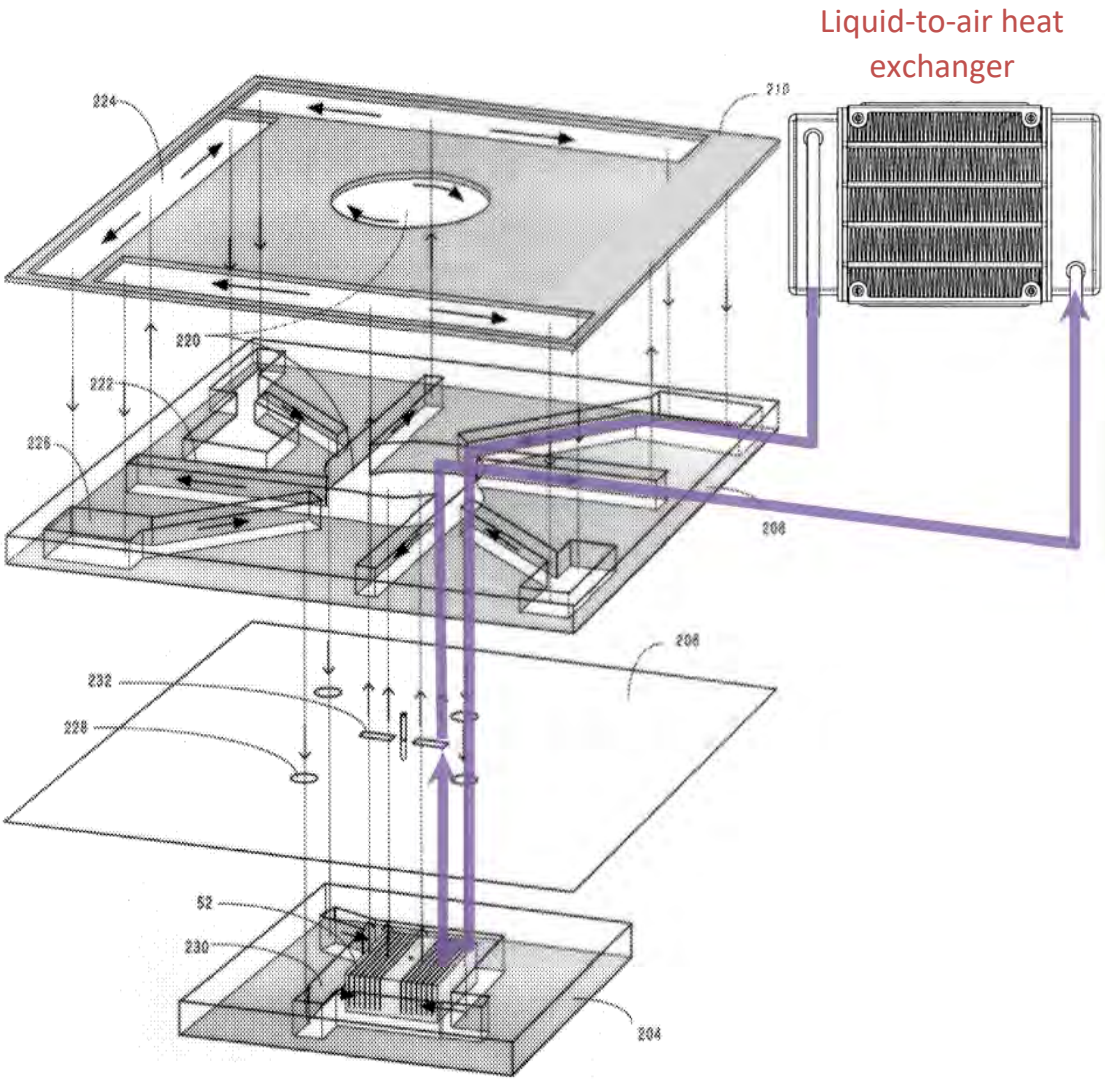

(Ex-1003, ¶184.) Adding the other three exemplary looped flow paths back, a POSITA would have understood the embodiment in FIG. 8 of Batchelder, as modified in view of Duan, to become the following system:

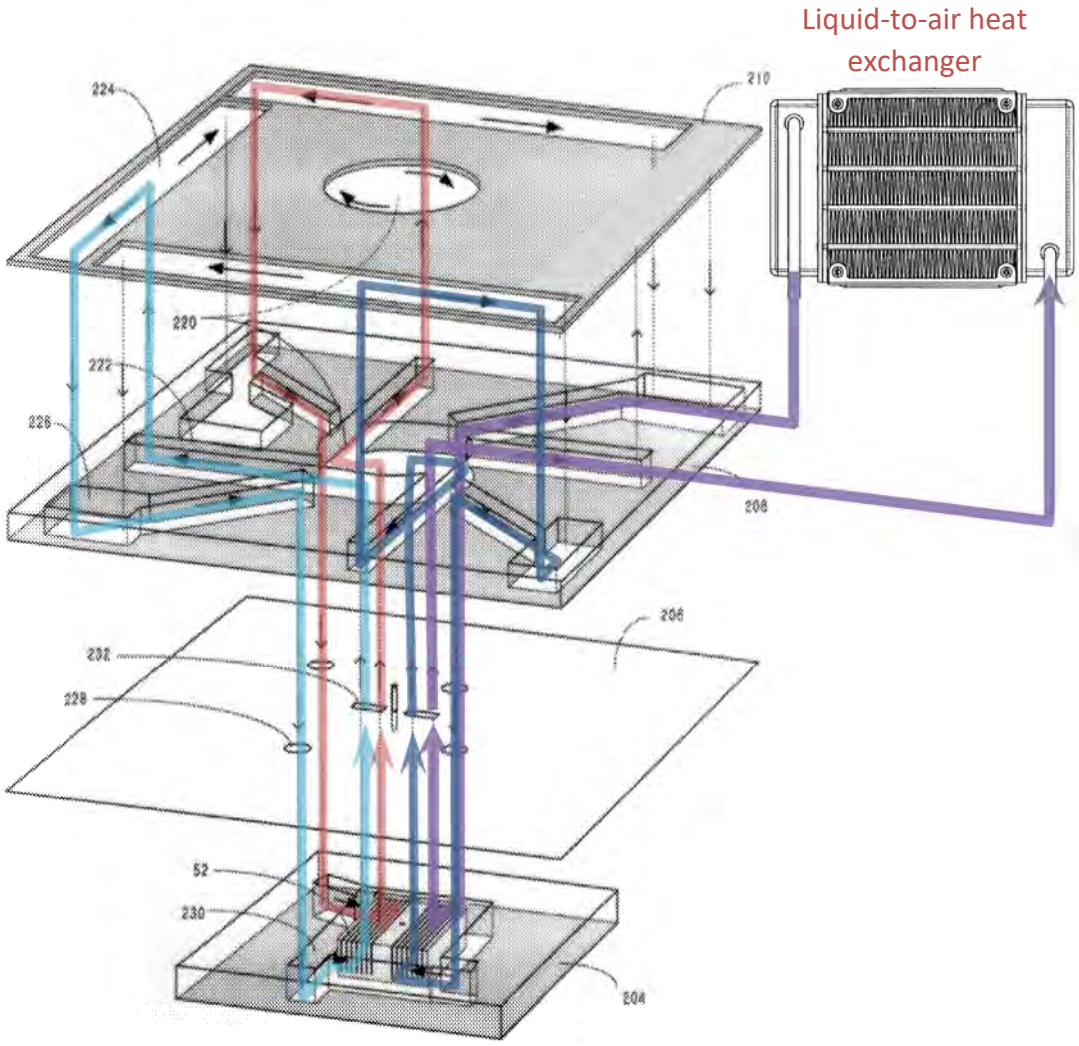

(Ex-1003, ¶185.)

Accordingly, a POSITA would have been motivated to modify Batchelder in view of Duan to incorporate a radiator into the embodiment in FIGS. 7 and 8, and would have had a reasonable expectation of success in doing so.[2] (*Id*., ¶186.)

---

[2] Contrary to Patent Owner's prior arguments in IPR2020-00523 (Ex-1009, 354-POR at 40-41), Batchelder does not teach away from adding a radiator with a fan because of: (1) higher cost due to the added fan and radiator; or (2) lower reliability due to the need for hoses and couplings to connect the heat spreader plate to the radiator. Batchelder is silent concerning the use of an external radiator with a fan, and certainly does not provide "'clear discouragement' from implementing" a radiator with a fan. *In re Ethicon, Inc*., 844 F.3d 1344, 1351 (Fed. Cir. 2017). Batchelder describes a disadvantage of hoses or couplings in the context of adding an external pump (not a radiator). And, even in that context, it does not "clearly discourage" hoses or couplings or indicate they should be avoided. Ultimately, a POSITA would have understood that any cost or reliability concerns associated with adding a remote radiator with a fan (which can often be an existing case fan that does not cost extra) is outweighed by the cost of failure of the heat generating component if its heat cannot be handled by Batchelder's active heat spreader plate alone. (Ex-1003, ¶¶188-190.) Indeed, the Board found that "Batchelder expresses a preference for the simpler design without a radiator <u>but does not teach away from using one.</u>" (Ex-1011, 354-FWD at 18 (emphasis added).)

2. Batchelder teaches claims 2-9.

[Claim 2] "The cooling system of claim 1, wherein the chassis shields the stator from the cooling liquid in the reservoir."

Batchelder in view of Duan teaches and renders obvious the limitation that the stator is positioned on the upper side of the chassis (top sheet 212) and isolated from the cooling liquid for the same reasons as discussed above with respect to [1-a]. For the same reasons, Batchelder in view of Duan teaches and renders obvious the limitation in claim 2 that "the chassis shields the stator from the cooling liquid in the reservoir." (Ex-1003, ¶192.)

[Claim 3] "The cooling system of claim 1, wherein the heat-exchanging interface includes a first side and a second side opposite the first side, and wherein the heat-exchanging interface contacts the cooling liquid in the thermal exchange chamber on the first side and the heat-exchanging interface is configured to be in thermal contact with the surface of the heat-generating component on the second side."

Batchelder in view of Duan teaches a heat-exchanging interface that forms a boundary of thermal exchange chamber and that is positions in thermal conduct with the heat-generating component for the same reason as discussed above with respect to limitation [1-e]. As shown in the following annotated figure, the heat-exchanging interface contacts the cooling liquid in the thermal exchange chamber on the first side (top side of bottom sheet 24) and is configured to be in thermal contact with the surface of the heat-generating component (2) on the second side (bottom side of bottom sheet 24):

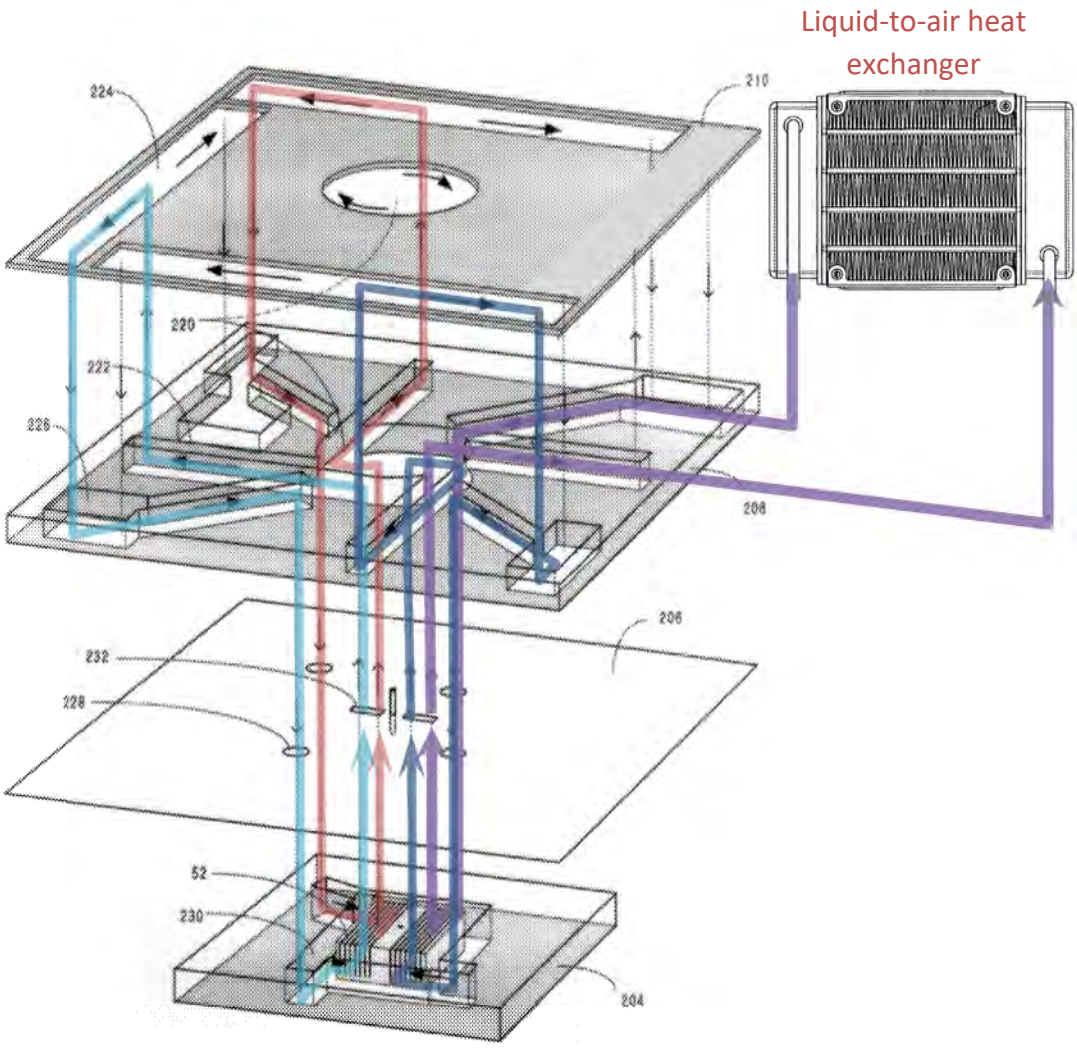
Liquid-to-air heat exchanger
224
210
220
222
226
208
206
232
228
52
230
204

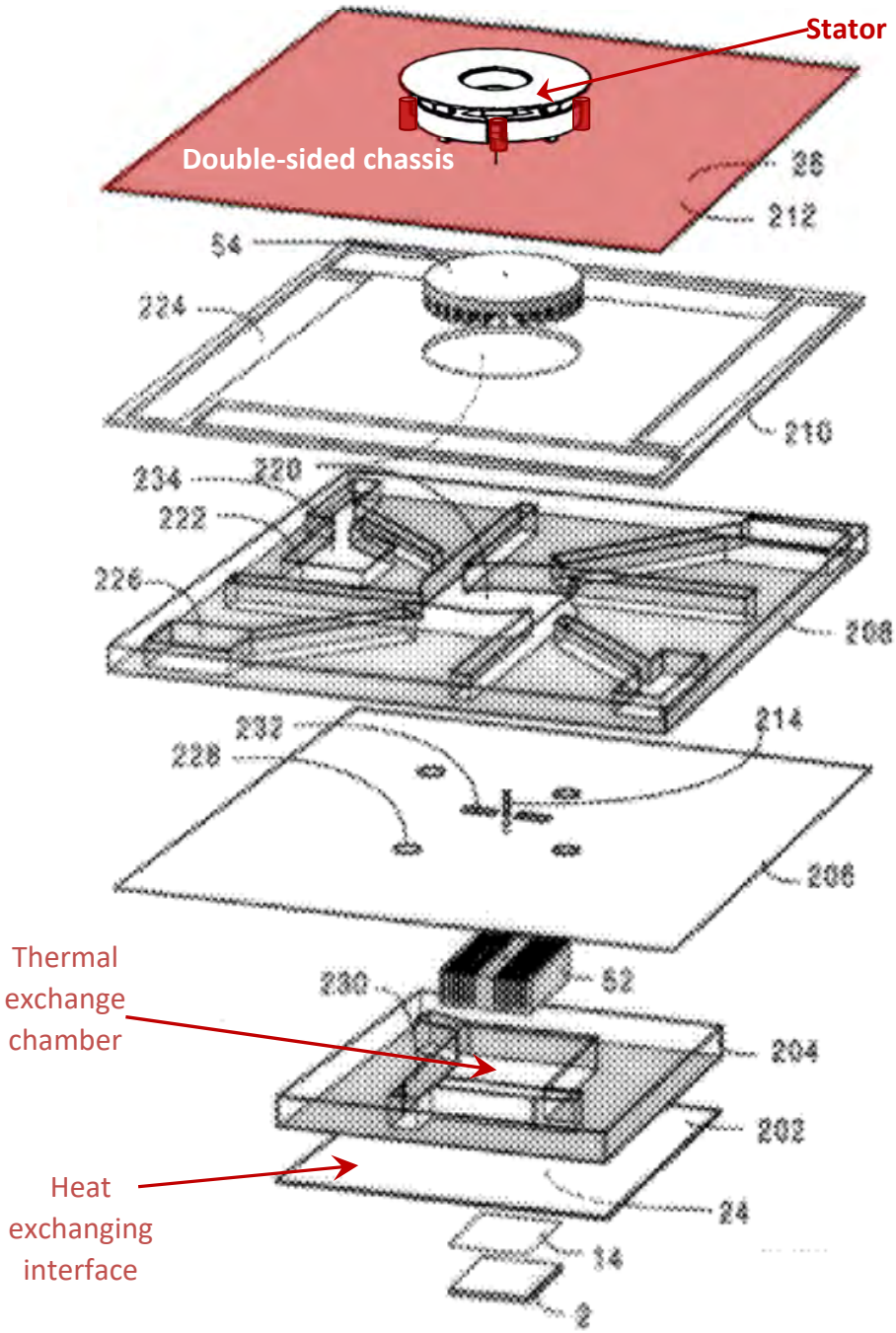

(Ex-1008, FIG. 8 (modified); FIG. 7 (excerpt); *Id*., 7:30-33; Ex-1003, ¶¶193-195.)

[Claim 4] "The cooling system of claim 3, wherein the first side of the heat-exchanging interface includes features that are adapted to increase heat transfer from the heat-exchanging interface to the cooling liquid in the thermal exchange chamber."

[Claim 5] "The cooling system of claim 4, wherein the features include at least one of pins or fins."

Batchelder in view of Duan teaches the limitations of claims 4 and 5. Batchelder states: "Heat enters the active spreader plate (20) on its lower surface (24), and is conducted into a metallic fin array (52). Instead of the heat primarily being conducted by the solid bulk material of the active spreader plate (22), it is transfer from the fin array (52) into a heat transfer fluid sealed in flow channels (50) inside the active spreader plate (20)." (Ex-1008, 4:63-5:6.) Batchelder's FIG. 6 discloses various "fin means" including fins 112 and pins 102:

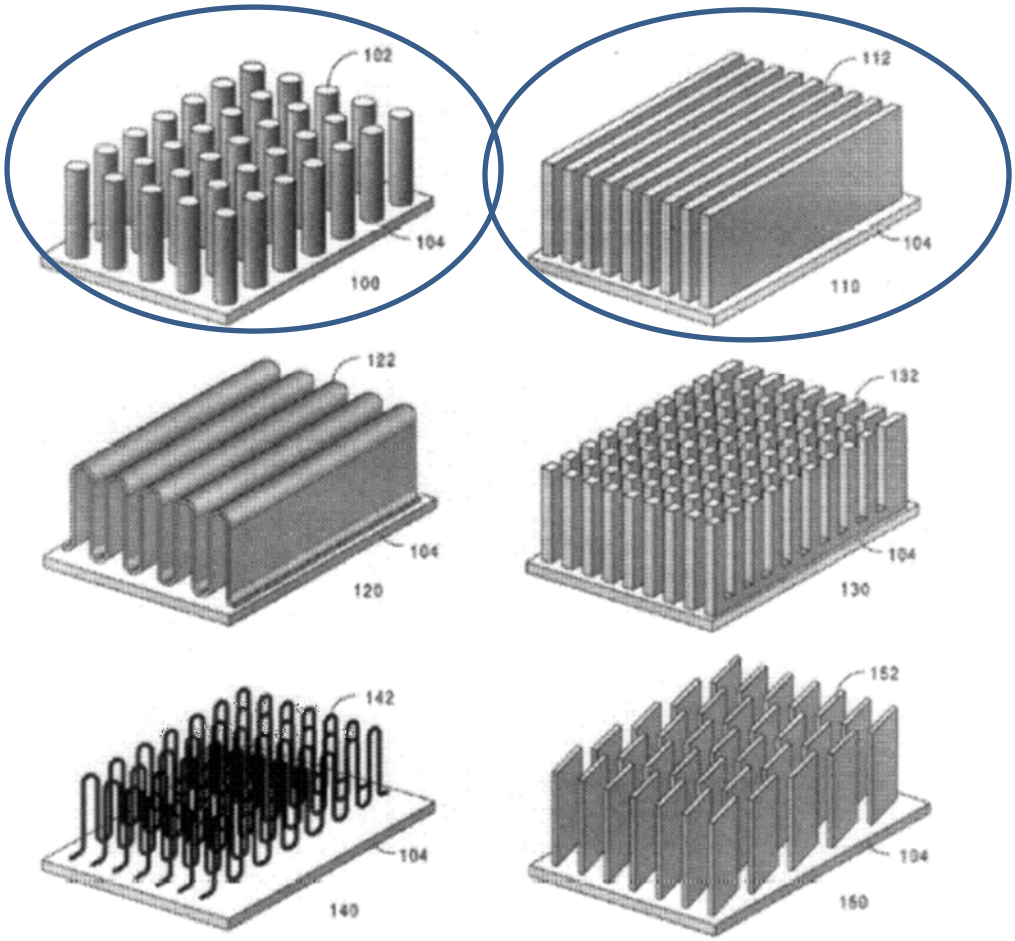

FIG.6

(Ex-1008, FIG. 6, 7:4-8.) A POSITA, reading Batchelder, would have understood that the fins or pins are positioned on the first side of the heat-exchanging interface. (Ex-1003, ¶199.) The fins or pins are adapted to increase heat transfer by "increase[ing] the effective area of contact between a heat transfer fluid such as the atmosphere and one or more surfaces (104)." (*Id*.; Ex-1008, 7:11-14.)

[Claim 6] "The cooling system of claim 1, wherein a passage of the one or more passages that fluidly couple the pump chamber and the thermal exchange chamber is offset from a center of the impeller."

Batchelder in view of Duan teaches the pump and thermal exchange chambers that are fluidly coupled by one or more passages for the same reasons as discussed above with respect to limitation [1-d]. As in the following annotated figures, a passage (highlighted in yellow) of the one or more passages is "offset from a center of the impeller":

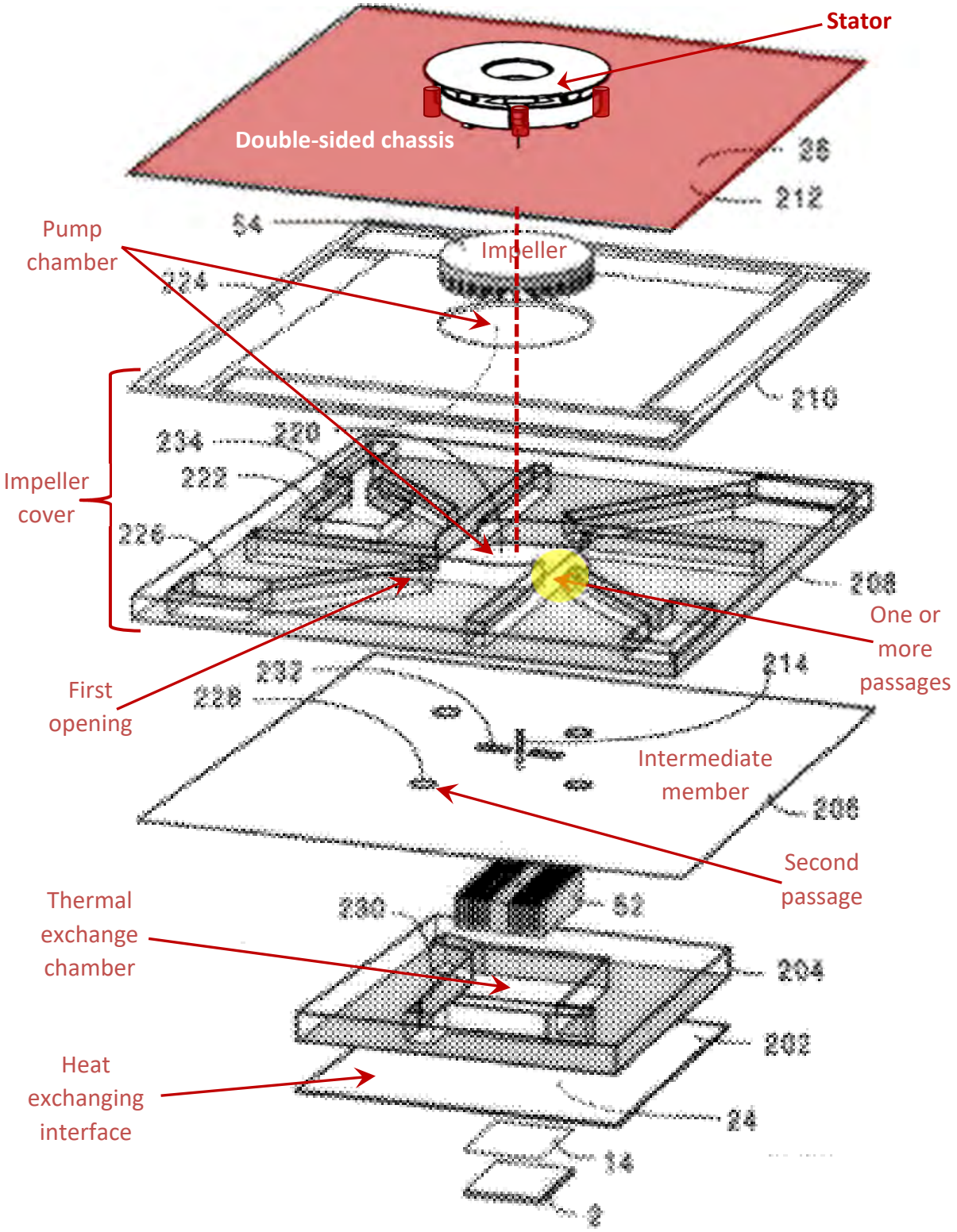
Stator
Double-sided chassis
36
212
54
Impeller
Pump chamber
224
210
234
220
222
Impeller cover
226
208
One or more passages
First opening
232
228
214
Intermediate member
206
Second passage
Thermal exchange chamber
230
52
204
202
Heat exchanging interface
24
14
2

pump chamber

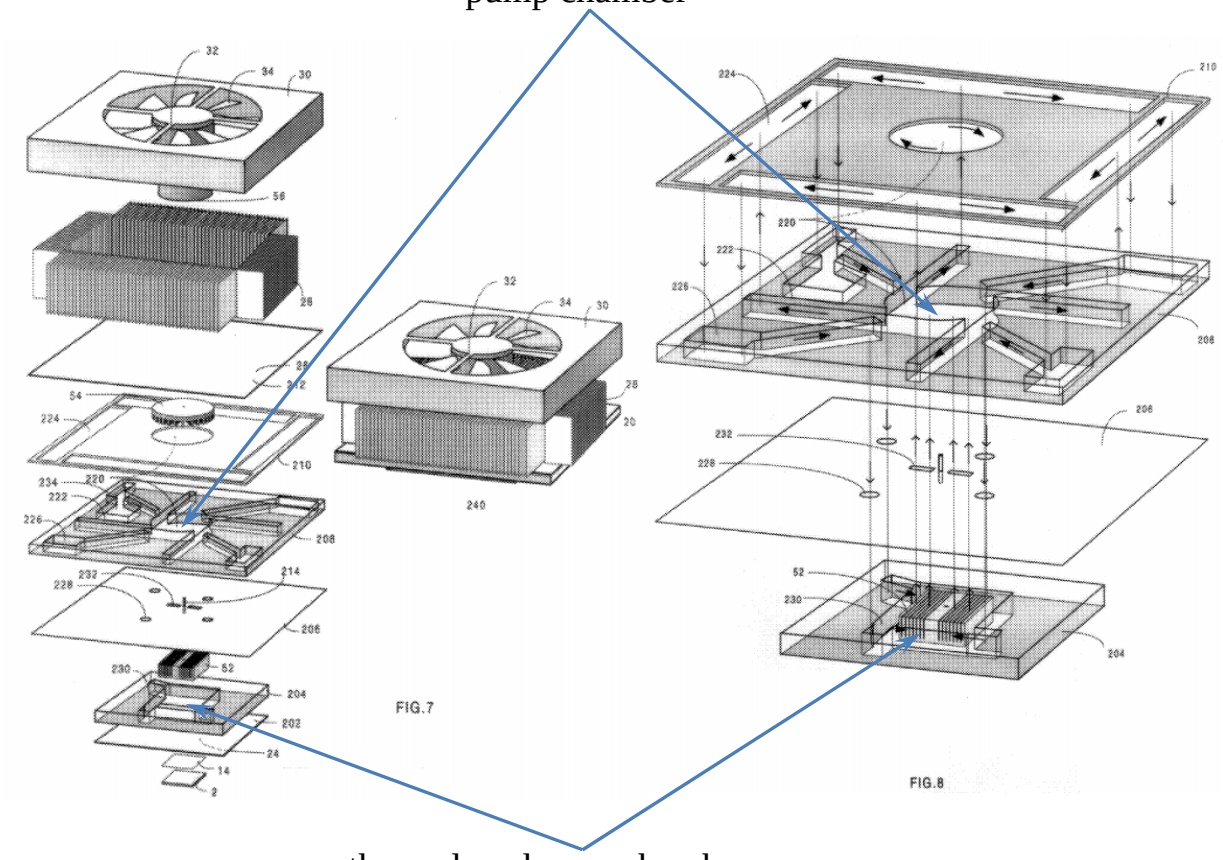

thermal exchange chamber

(Ex-1008, FIG. 7 (modified, annotated); Ex-1003, ¶¶201-202.)

<u>[Claim 7] "The cooling system of claim 1, wherein the impeller includes a plurality of curved blades."</u>

Batchelder in view of Duan teaches this limitation. Batchelder teaches that different pumps can be used as the impeller 54 in the active spreader plate 20 in Figure 2. In the embodiment shown in Figure 2 of Batchelder, "the impeller (54) is a centripetal or centrifugal pump[.]" (Ex-1008, 5:26-32.) Batchelder also discloses that the "centripetal or centrifugal pump 300," shown in the "lower left" corner of

FIG. 9 below, is one of "several examples of fluid impellers that can effectively be used in an active spreader plate" (item 20 of FIG. 2) (Ex-1008, 8:14-15, 8:36-47):

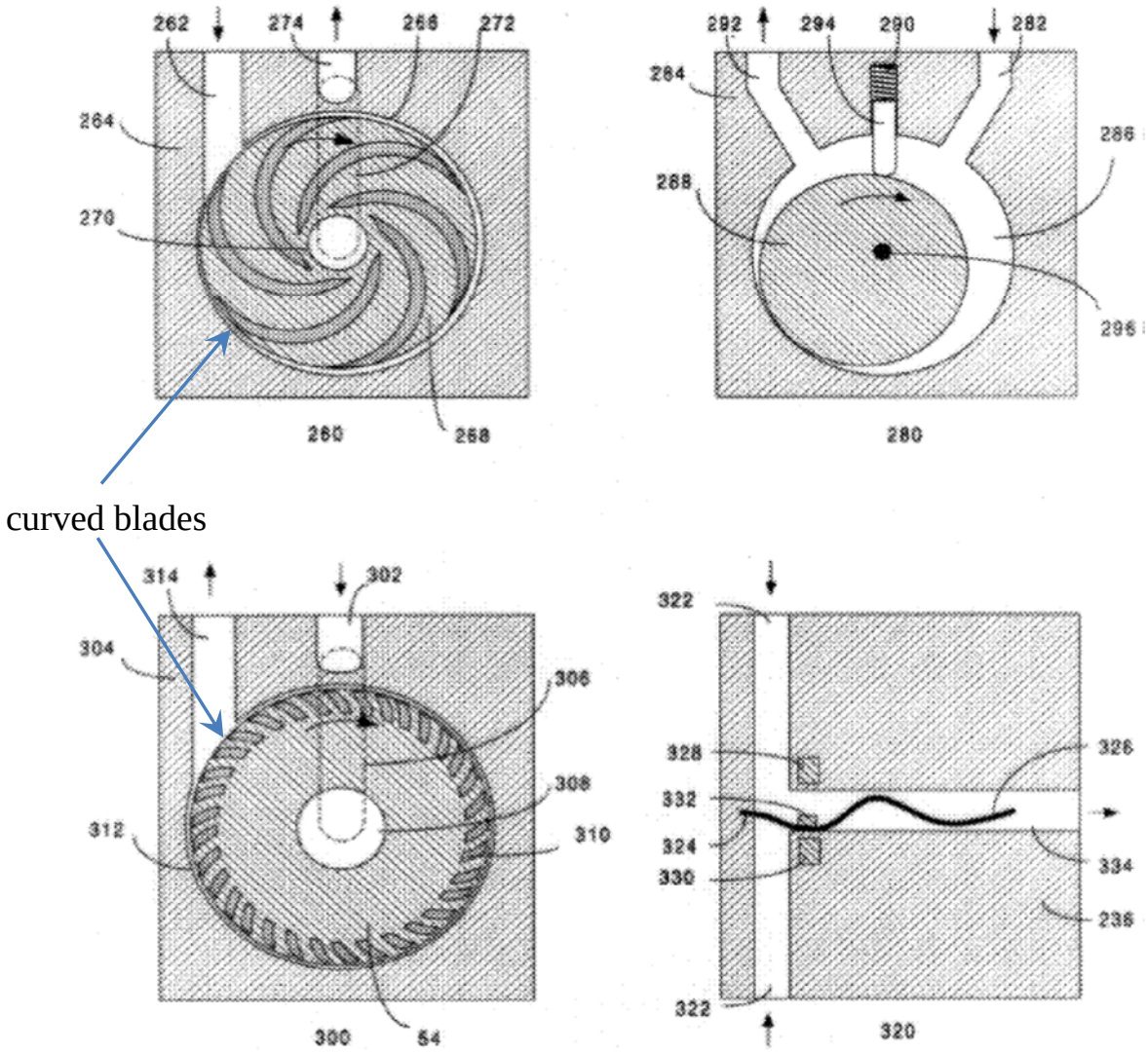

FIG.9

When either the "viscosity pump 260" or the "centripetal or centrifugal pump 300" is adopted for impeller 54, the "rotatable impeller 54" has a plurality of curved blades. (Ex-1008, 8:14-27, 8:36-47; Ex-1003, ¶¶203-205.)

[Claim 8] "The cooling system of claim 1, wherein the heat-exchanging interface includes one of copper and aluminum."

Batchelder in view of Duan teaches a heat-exchanging interface, as discussed above with respect to limitation [1-e]. Batchelder teaches that the components of its cooling system can be formed from plastic, metal, or a combination of the two. (Ex-1008, 4:9-19.) Batchelder recognizes that aluminum and copper are typically used in creating components in spreader plates. (*Id*., 4:44-47 ("The passive spreader plate is typically aluminum owing to aluminum's good thermal conductivity, low cost, and low weight. Other materials used for the spreader plate are steel, copper, pyrolytic graphite composite, and diamond, in order of increasing performance and increasing cost.").) Batchelder also discloses that the fins of the heat-exchanging interface "are preferably composed of aluminum, and can also be formed using…copper…." (*Id*., 7:16-19.) Even if Batchelder did not expressly teach the use of aluminum or copper in the heat-exchanging interface (it does), it would be obvious to a POSITA to use copper or aluminum because they are used extensively in electronics cooling applications due to their high thermal conductivity (especially copper) and low cost (especially aluminum). (Ex-1003, ¶207.) A POSITA would have been motivated to use a copper or aluminum for the heat-exchanging interface to increase heat transfer between the cooling liquid and the heat-generating component. (*Id*.) Moreover, use of copper or aluminum would have been obvious

to try. (*Id*.)

[Claim 9] "The cooling system of claim 1, wherein the heat radiator is fluidly coupled to the reservoir using flexible conduits, and the heat radiator is configured to be positioned remote from the reservoir."

Batchelder in view of Duan teaches this limitation. This is because Duan discloses a heat radiator fluidly coupled (via ducts 6) to a reservoir, as discussed with respect to limitation [1-f]. Although Duan does not explicitly disclose that the duct 6 is flexible, a POSITA would have been motivated to use flexible tubing such as rubber tubing to facilitate assembly. (Ex-1003, ¶208.)

3. Batchelder and Duan teach each limitation of claim 10 and render it obvious.

[10-PRE]

Batchelder in view of Duan teaches [10-PRE] for the same reasons discussed above for [1-PRE]. (Ex-1003, ¶209.)

[10-a] "a centrifugal pump adapted to circulate a cooling liquid, the pump including: an impeller exposed to the cooling liquid; and a stator isolated from the cooling liquid:"

Batchelder in view of Duan teaches or renders obvious a pump adapted to circulate cooling liquid, including an impeller exposed to the liquid and a stator isolated from it, as discussed above for [1-a]. (Ex-1003, ¶210.) Batchelder teaches that, "[i]n the most preferred embodiment, the impeller (54) is a centripetal or centrifugal pump[.]" (Ex-1008, 5:26-32.)

[10-b] "a reservoir configured to be thermally coupled to a heat-generating component of the computer system, the reservoir including:"

Batchelder in view of Duan teaches a reservoir for the same reasons discussed above for [1-b]. Batchelder's reservoir is thermally coupled to a heat-generating component of the computer system (2), as shown below:

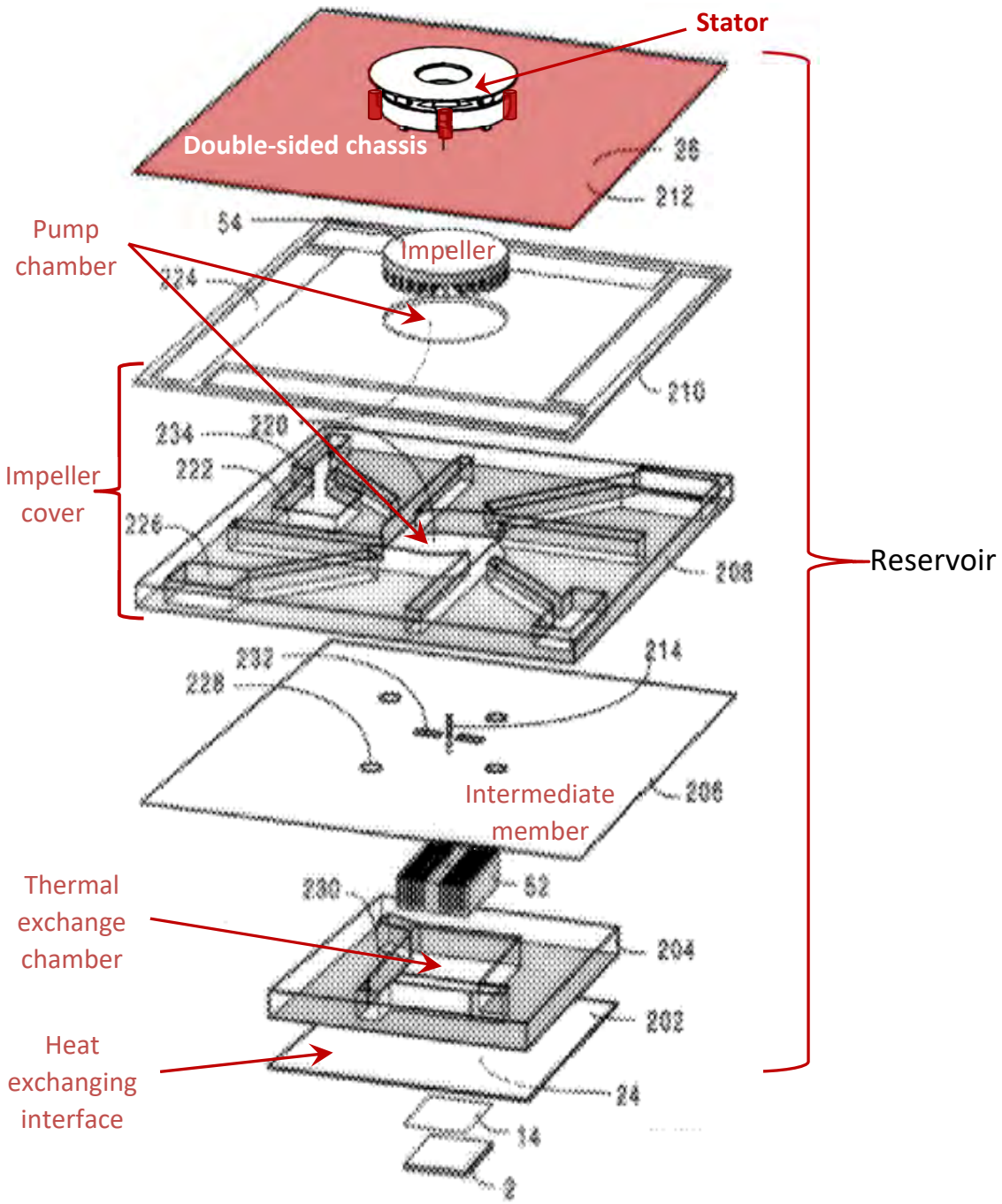

(Ex-1008, FIG. 7 (annotated excerpt); *see also* [1-e] above; Ex-1003, ¶211.)

[10-c] "a thermal exchange chamber adapted to be positioned in thermal contact with the heat-generating component;"

Batchelder in view of Duan teaches a thermal exchange chamber for the reasons discussed above for [1-d]. Batchelder's thermal exchange chamber is positioned in thermal contact with the heat-generating component:

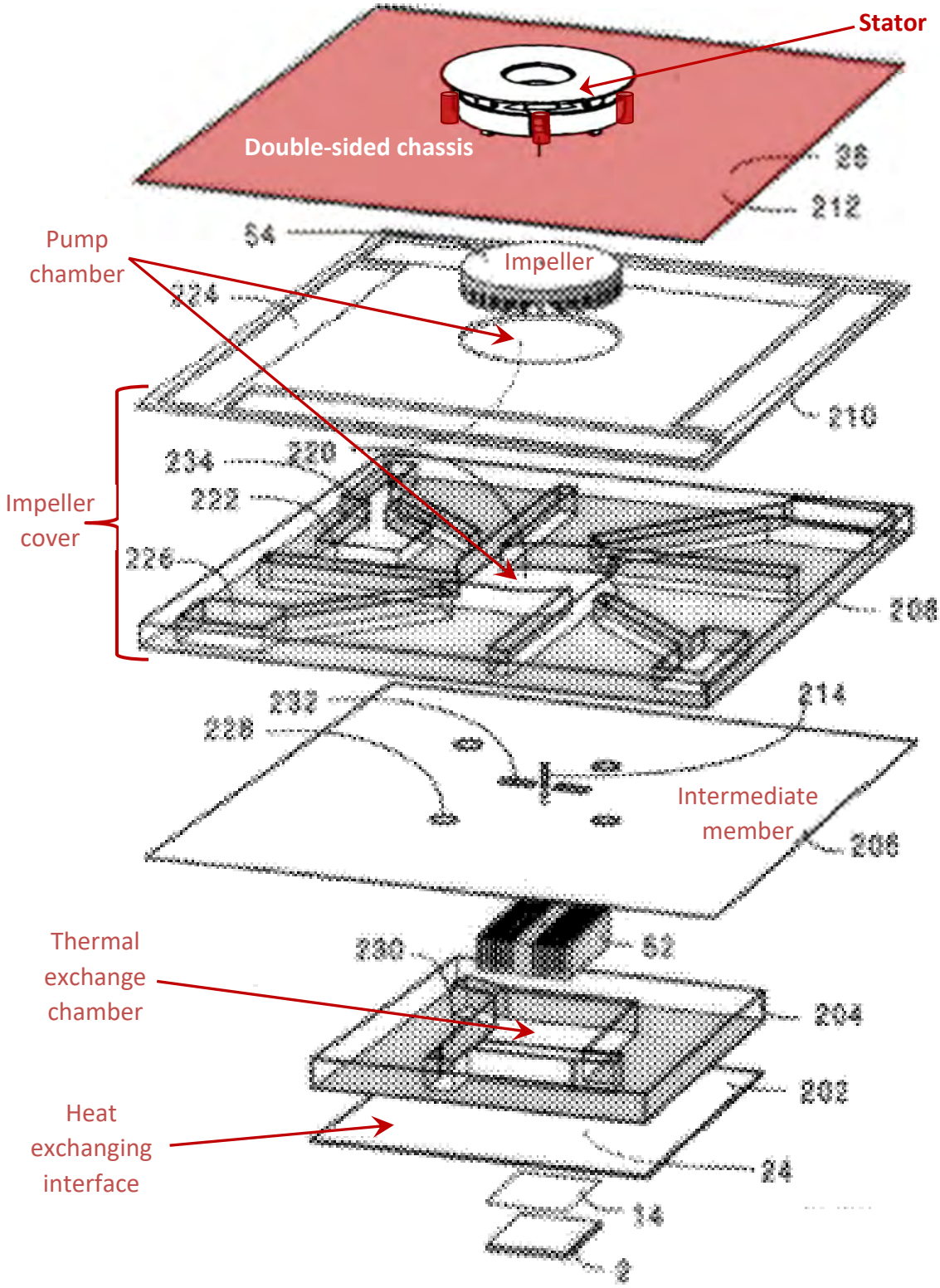
Stator
Double-sided chassis
36
212
54
Pump chamber
Impeller
224
210
234
220
222
Impeller cover
226
208
232
214
228
Intermediate member
206
Thermal exchange chamber
230
52
204
202
Heat exchanging interface
24
14
2

(Ex-1008, FIG. 7 (annotated excerpt); 7:30-33 ("Heat from the heat source passes through the bottom surface (24) of the bottom sheet (202) and into a fin means (52) attached to the top surface of the bottom sheet (202)."); Ex-1003, ¶¶212-213.)

[10-d] "a separate pump chamber vertically spaced apart from the thermal exchange chamber and coupled with the thermal exchange chamber through one or more passages configured for fluid communication between the pump chamber and the thermal exchange chamber, and."

Batchelder in view of Duan teaches [10-d] for the same reasons discussed above for [1-c] and [1-d]. (Ex-1003, ¶214.)

[10-e] "wherein at least one of the one or more passages is offset from a center of the impeller."

Batchelder in view of Duan teaches [10-e] for the same reasons discussed above for [claim 6]. (Ex-1003, ¶215.)

4. Batchelder and Duan teach claims 11-14.

[Claim 11] "The cooling system of claim 10, wherein a top wall of the reservoir physically separates the impeller from the stator:"

Batchelder in view of Duan teaches this limitation. Batchelder teaches a reservoir bounded on the top by top sheet (212), as discussed above for [1-b]. Batchelder also renders obvious a pump having an impeller and stator that are physically separated, as discussed above for [1-a]. As shown below, the top wall of the reservoir (top sheet 212) physically separates the impeller and stator:

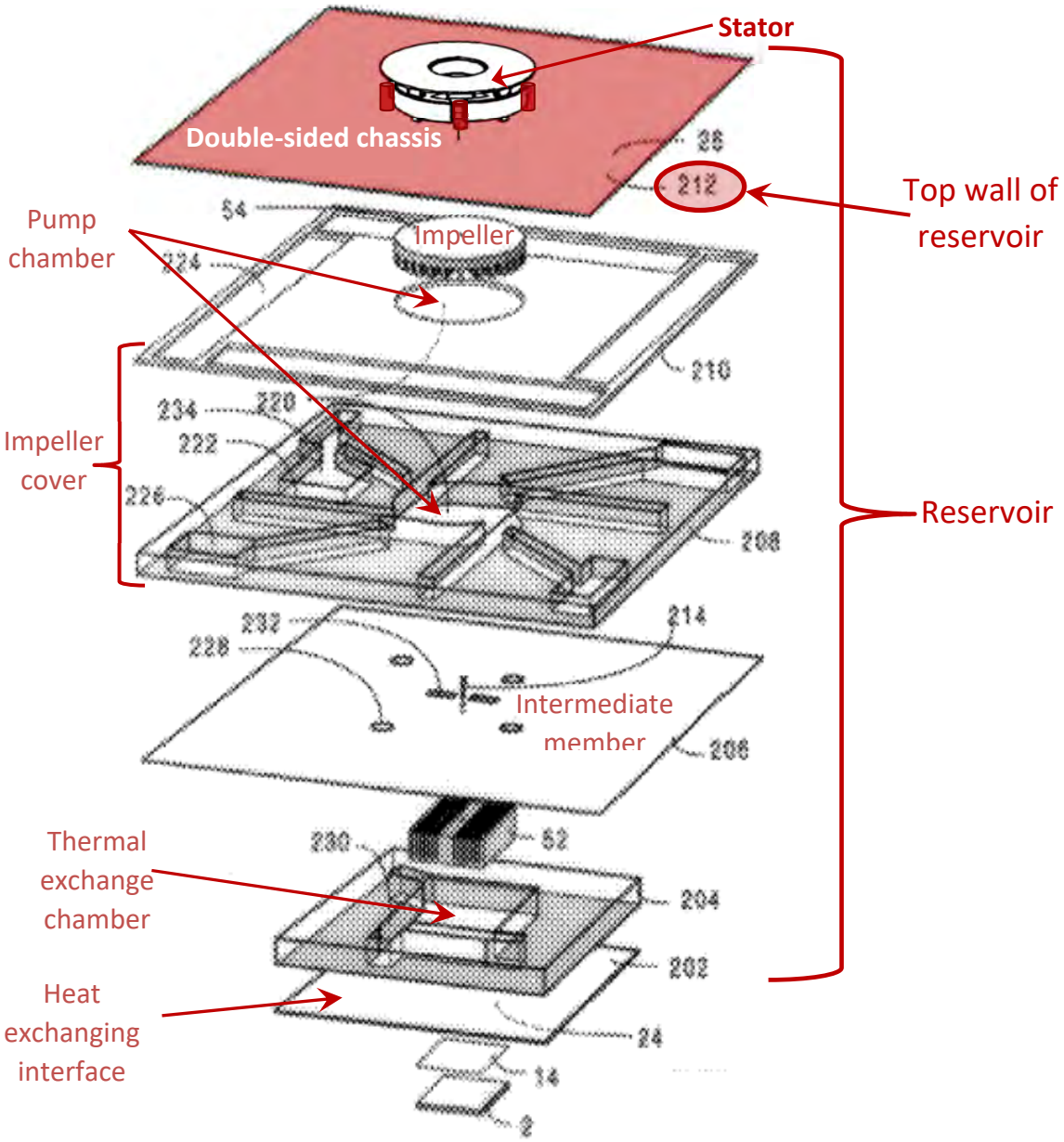

(Ex-1003, ¶217.)

<u>[Claim 12] "The cooling system of claim 10, wherein the thermal exchange chamber includes a heat-exchange interface configured to be placed in thermal contact with the heat-generating component."</u>

Batchelder in view of Duan teaches [Claim 12] for the same reasons discussed above for [1-e]. (Ex-1003, ¶218.)

[Claim 13] "The cooling system of claim 10, further including a heat radiator fluidly coupled to the reservoir using flexible conduits, wherein the heat radiator is configured to be positioned remote from the reservoir."

Batchelder in view of Duan teaches [Claim 13] for the same reasons discussed above for [1-f] and [claim 9]. (Ex-1003, ¶219.)

[Claim 14] "The cooling system of claim 10, wherein the fluid passage that is offset from the center of the impeller is positioned tangentially to the circumference of the impeller."

Batchelder in view of Duan teaches [Claim 14] for the same reasons discussed above for [claim 6]. As shown below, Batchelder's offset passage is positioned tangentially to the circumference of the impeller (54):

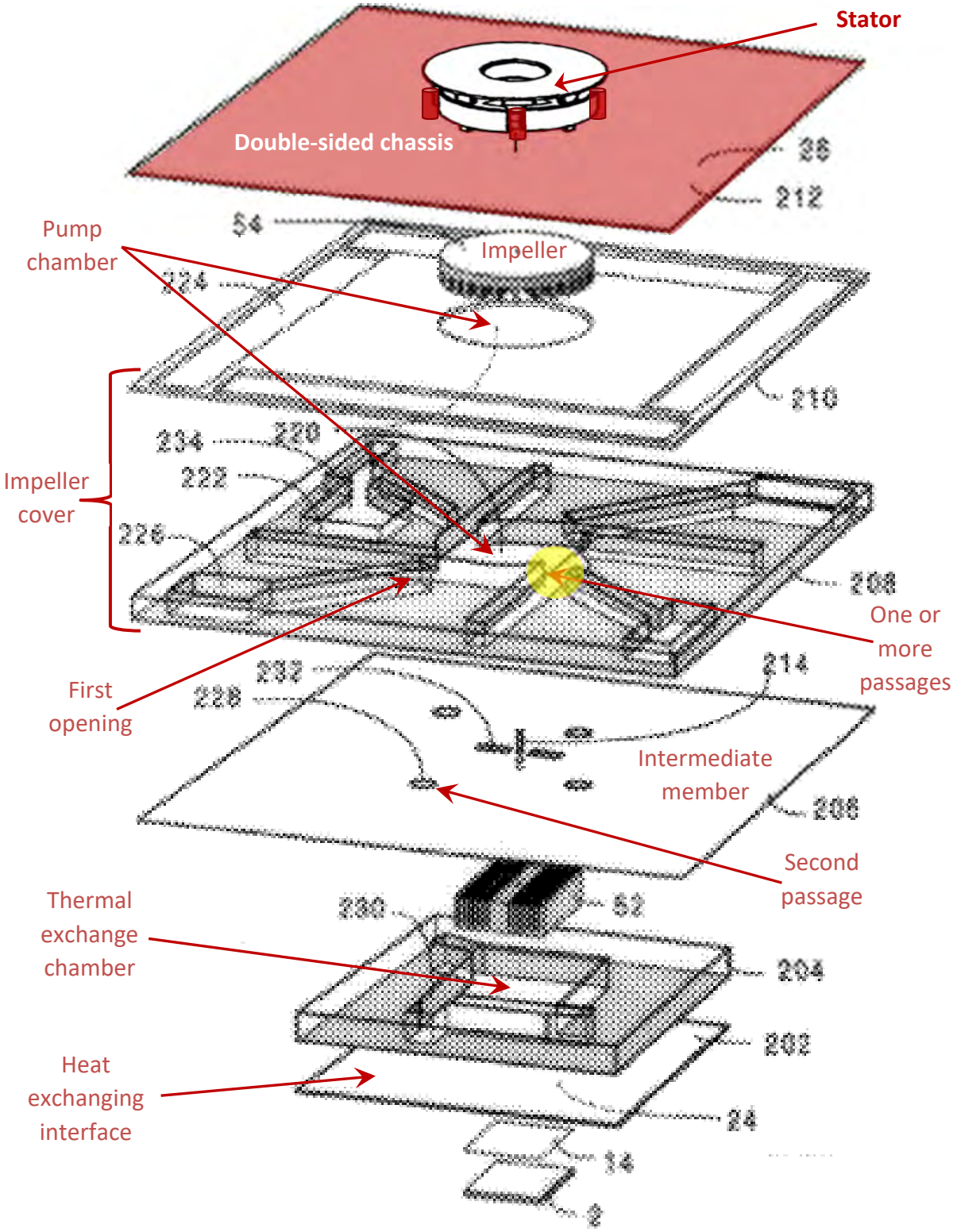
Stator
Double-sided chassis
36
212
54
Impeller
Pump chamber
224
210
234
220
222
Impeller cover
226
208
One or more passages
232
214
First opening
228
Intermediate member
206
Second passage
230
52
Thermal exchange chamber
204
202
Heat exchanging interface
24
14
2

(Ex-1003, ¶220.)

5. Batchelder and Duan teach each limitation of claim 15 and render it obvious.

[15-PRE]

Batchelder in view of Duan teaches [15-PRE] for the same reasons discussed above for [1-PRE]. (Ex-1003, ¶221.)

[15-a] "a pump adapted to circulate a cooling liquid, the pump including: an impeller exposed to the cooling liquid; and a stator isolated from the cooling liquid;"

Batchelder in view of Duan teaches [15-a] for the same reasons discussed above for [1-a]. (Ex-1003, ¶222.)

[15-b] "a reservoir including"

Batchelder in view of Duan teaches [15-b] for the same reasons discussed above for [1-b]. (Ex-1003, ¶223.)

[15-c] "an impeller cover, an intermediate member and"

Batchelder in view of Duan teaches an "impeller cover" as discussed above for [1-c].

Batchelder in view of Duan also teaches an intermediate member, as shown in the excerpt of FIG. 7 below:

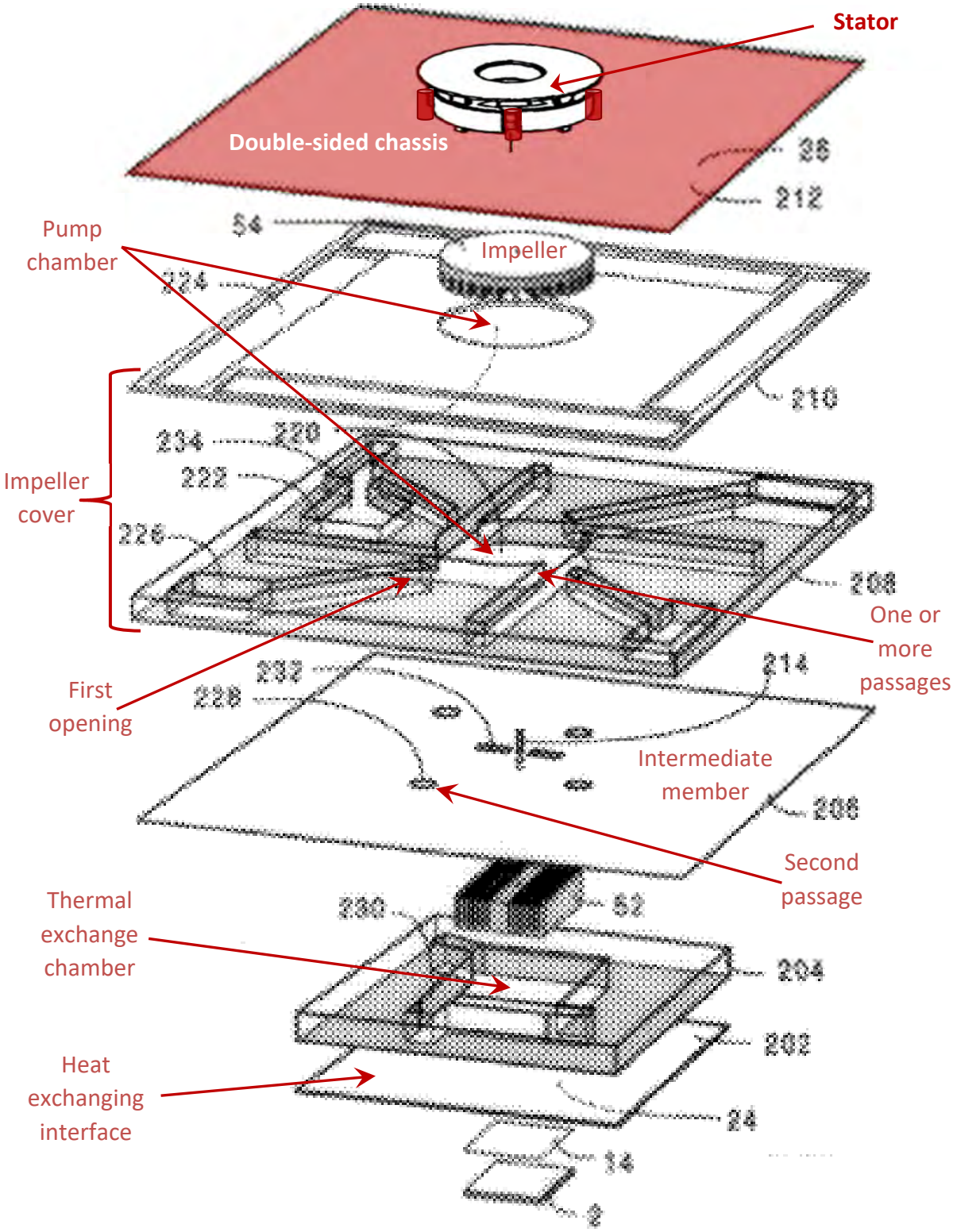

(Ex-1008, FIG. 7 (annotations added); 7:33-36 ("The fin means (52) is contained in

a pocket (230) bounded by a lower stamped plate (204), the bottom sheet (202), and a medial sheet (206).") As shown, Batchelder discloses an intermediate member (medial sheet 206). (Ex-1003, ¶¶224-225.)

[15-d] "a heat exchange interface…wherein a first side of the heat-exchanging interface is in contact with a cooling liquid in the thermal exchange chamber and a second side of the heat-exchanging interface opposite the first side is configured to be placed in thermal contact with a surface of the heat-generating component; and"

Batchelder in view of Duan teaches [15-d] for the same reasons discussed above for [1-e] and [claim 3]. (Ex-1003, ¶226.)

[15-e] "wherein a top wall of the reservoir and the impeller cover define a pump chamber for housing the impeller, and the intermediate member and the heat exchange interface define a thermal exchange chamber, the pump chamber and the thermal exchange chamber being spaced apart from each other in a vertical direction and fluidly coupled together; and"

Batchelder in view of Duan teaches all of these limitations. As shown below, a top wall of the reservoir (212) and the impeller cover define a pump chamber for housing the impeller, and the intermediate member and the heat exchange interface define a thermal exchange chamber, the pump chamber and the thermal exchange chamber being spaced apart from each other by at least the thickness of the intermediate member in a vertical direction and fluidly coupled together by at least the one or more passages and the second passage.

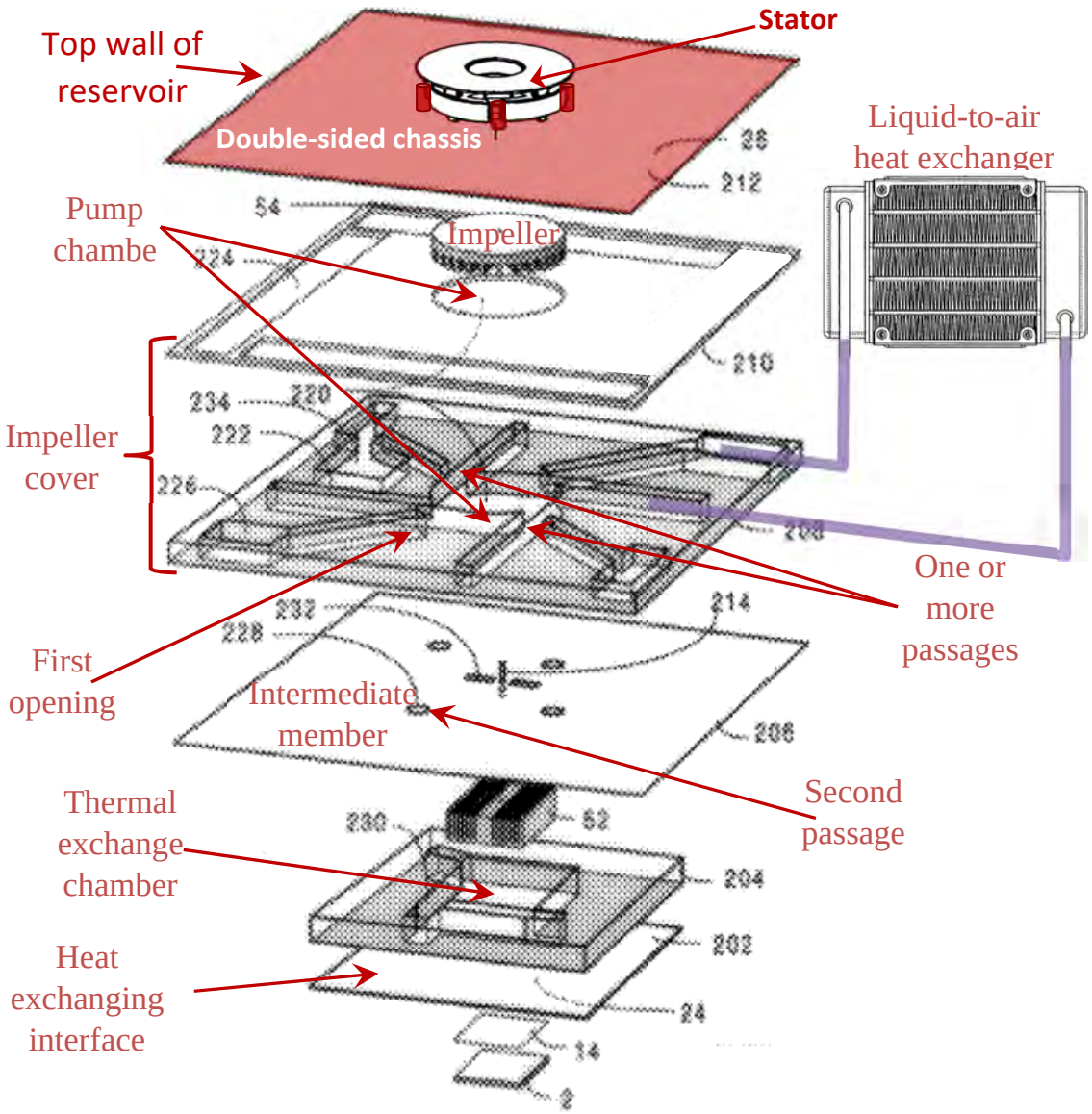

(Ex-1003, ¶¶227-228.)

<u>[15-f] "a liquid-to-air heat exchanger fluidly coupled to the reservoir using flexible conduits, the heat exchanger being configured to be positioned remote from the reservoir."</u>

A POSITA would understand Duan's heat radiator to be "a liquid-to-air heat exchanger." (Ex-1003, ¶229.) Accordingly, Batchelder in view of Duan teaches [15-f] for the same reasons discussed above for [1-f] and [claim 9].

6. Batchelder teaches claims 16-29.

[Claim 16] "The cooling system of claim 15, wherein the impeller cover includes a first opening radially offset from a center of the impeller and the intermediate member includes a second passage that is aligned with the first opening, the first and the second opening being configured to direct the cooling liquid from the pump chamber into the thermal exchange chamber."

Batchelder in view of Duan teaches an impeller cover and intermediate member for the same reasons discussed above for [1-c] and [15-c]. As shown below, Batchelder's impeller cover has a first opening radially offset from a center of the impeller and the intermediate member includes a second passage (228) that is aligned with the first opening, the first and the second opening being configured to direct the cooling liquid from the pump chamber into the thermal exchange chamber.

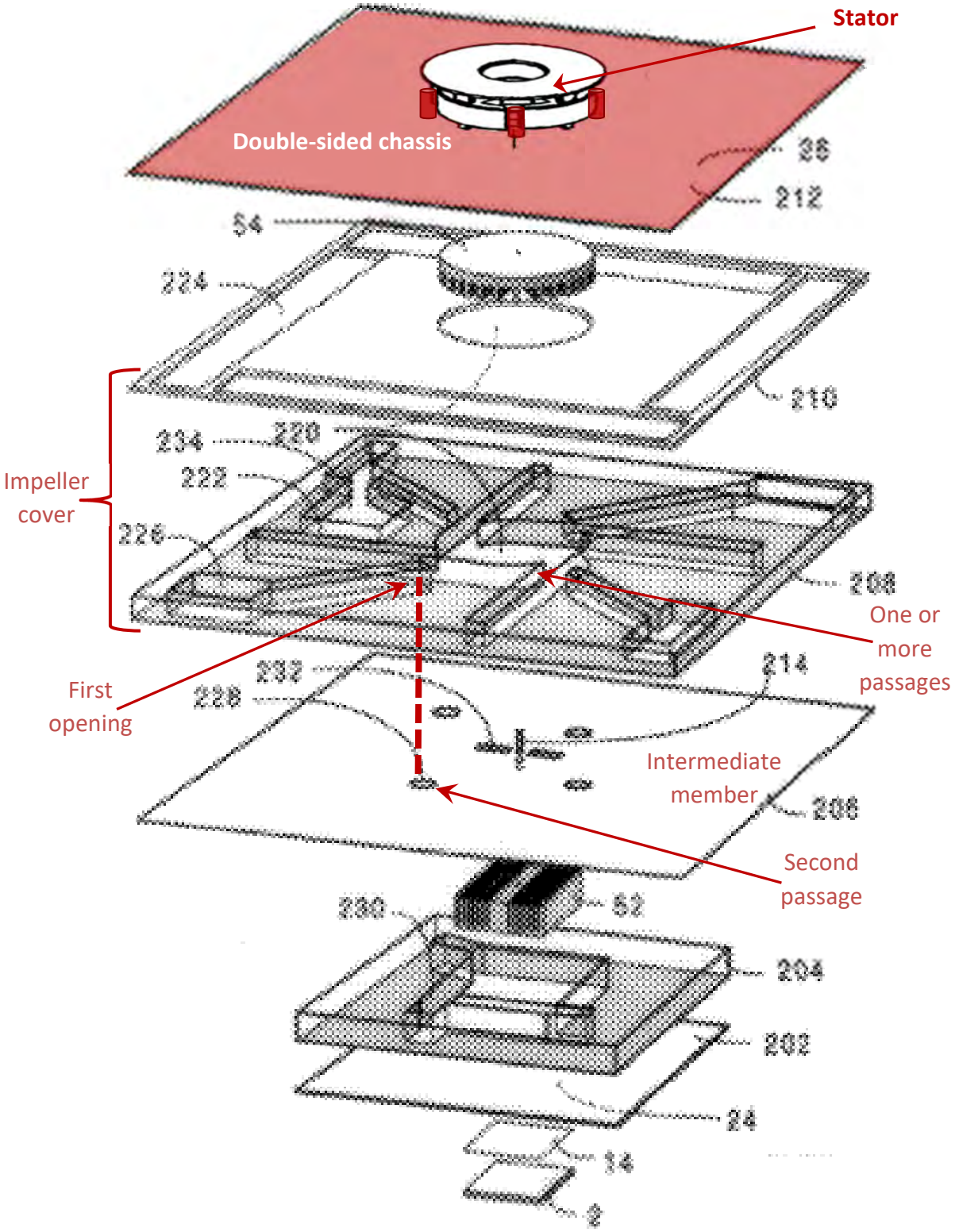

(Ex-1008, FIG. 7 (annotated excerpt); Ex-1003, ¶¶231-232.)

[Claim 17] "The cooling system of claim 15, wherein the first side of the heat-exchanging interface includes at least one of pins or fins."

Batchelder in view of Duan teaches [Claim 17] for the same reasons discussed above for [claim 5]. (Ex-1003, ¶233.)

[Claim 18] "The cooling system of claim 15, wherein the top wall of the reservoir extends between the stator and the impeller and shields the stator from the cooling liquid in the reservoir."

Batchelder in view of Duan teaches [Claim 18] for the same reasons discussed above for [1-a], [1-b] and [claim 2]. (Ex-1003, ¶234.)

[Claim 19 / Claim 23] "The cooling system of claim [1 / 10], wherein the one or more passages include a passage configured to direct cooling liquid from the pump chamber directly into the thermal exchange chamber."

Batchelder in view of Duan teaches this limitation for the same reasons discussed above for [1-d]. Further, this limitation is disclosed or taught for the same reasons discussed below for [claim 27]. (Ex-1003, ¶235.)

[Claim 20] "The cooling system of claim 1, wherein the one or more passages include a plurality of passages positioned within the reservoir that opens into the thermal exchange chamber."

[Claim 28] "The cooling system of claim 15, wherein the pump chamber and the thermal exchange chamber are fluidly coupled together by a plurality of passages positioned within the reservoir that open into the thermal exchange chamber."

Batchelder in view of Duan teaches the pump and thermal exchange chambers that are fluidly coupled by one or more passages for the same reasons discussed above with respect to limitation [1-d]. As shown below, there are a "plurality of

passages" (e.g., holes 228, slots 232) that open into the thermal exchange chamber:

pump chamber

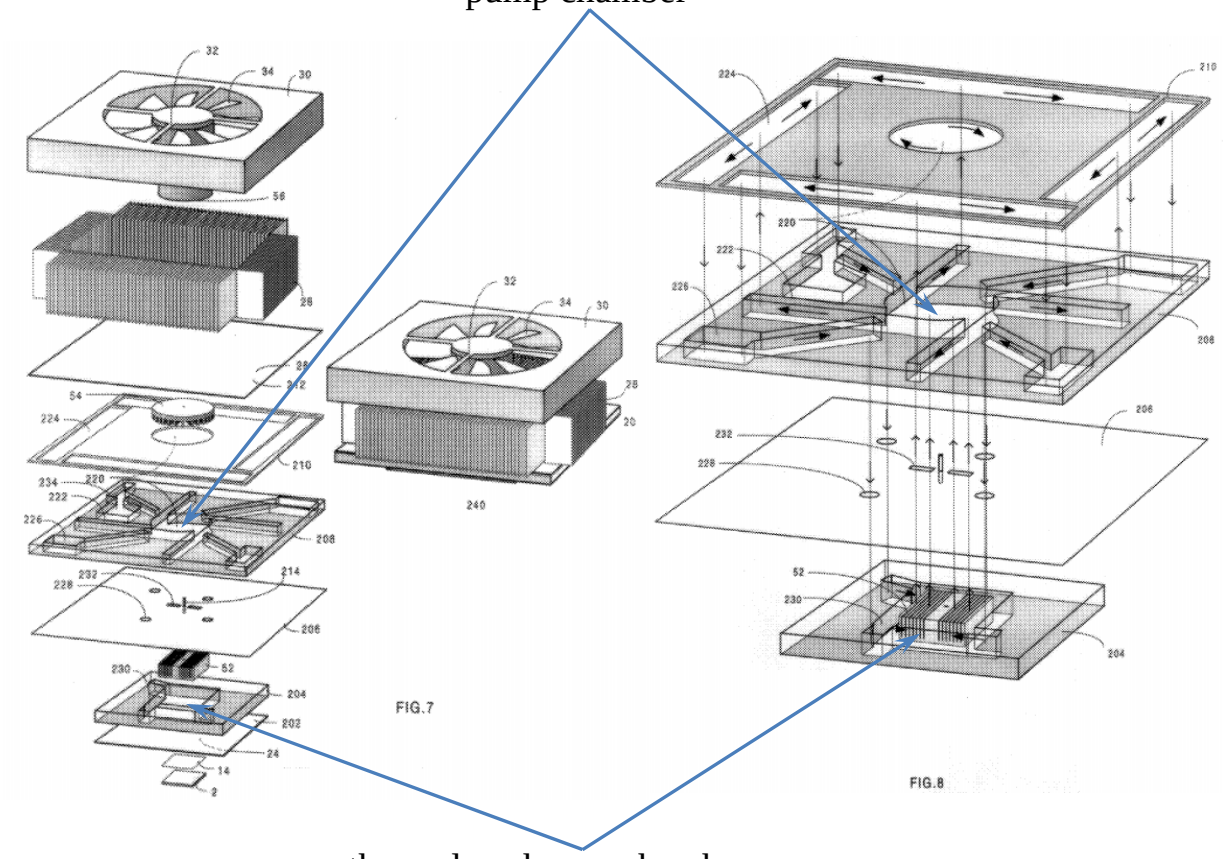

thermal exchange chamber

(Ex-1008, FIGS. 7-8; Ex-1003, ¶¶236-237.)

<u>[Claim 21 / Claim 25 / Claim 29] "The cooling system of claim [1 / 10 / 15], wherein an entire surface of the heat-exchanging interface in contact with the cooling liquid in the reservoir forms the boundary wall of the thermal exchange chamber."</u>

Batchelder in view of Duan teaches [Claim 21], [Claim 25], and [Claim 29] for the same reasons discussed above for [1-e]. As shown below, the "entire surface of the heat-exchanging interface" (top surface of bottom sheet 24) "*in contact with*

the cooling liquid" forms the boundary wall of the thermal exchange chamber in Batchelder:

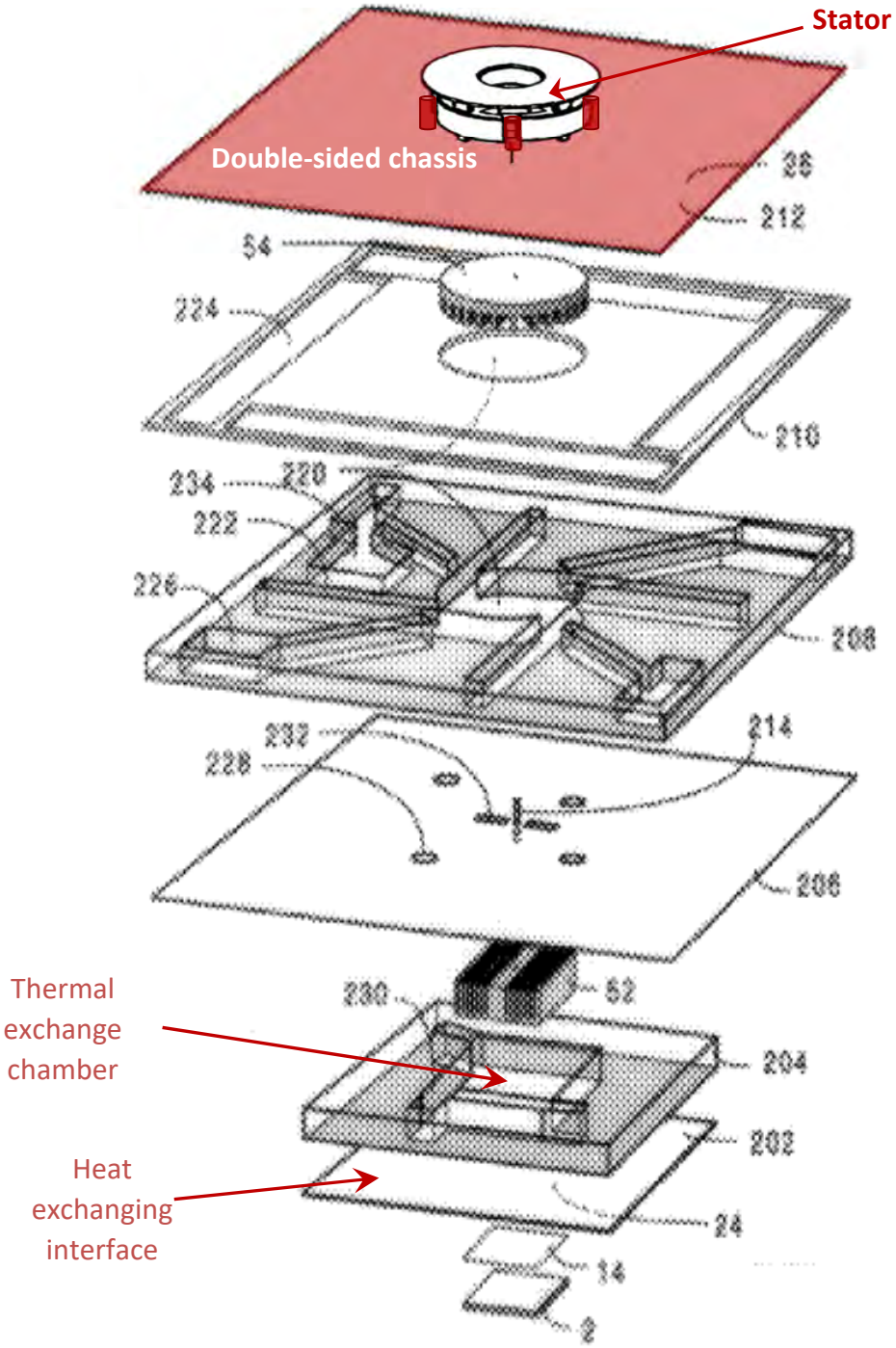

(Ex-1008, FIG. 7 (excerpt); Ex-1003, ¶238.)

[Claim 22 / Claim 26] "The cooling system of claim [1 / 10], wherein the reservoir further includes an inlet configured to direct the cooling liquid into the reservoir and an outlet configured to discharge the cooling liquid from the reservoir."

Batchelder in view of Duan teaches this limitation. It would have been obvious to modify Batchelder to include an external radiator, as discussed above with respect to [1-f]. When modified in view of Duan to include a radiator, the reservoir of modified system would necessarily include an inlet and outlet so the fluid could enter/exit the system reservoir and the radiator could be fluidly coupled with the reservoir:

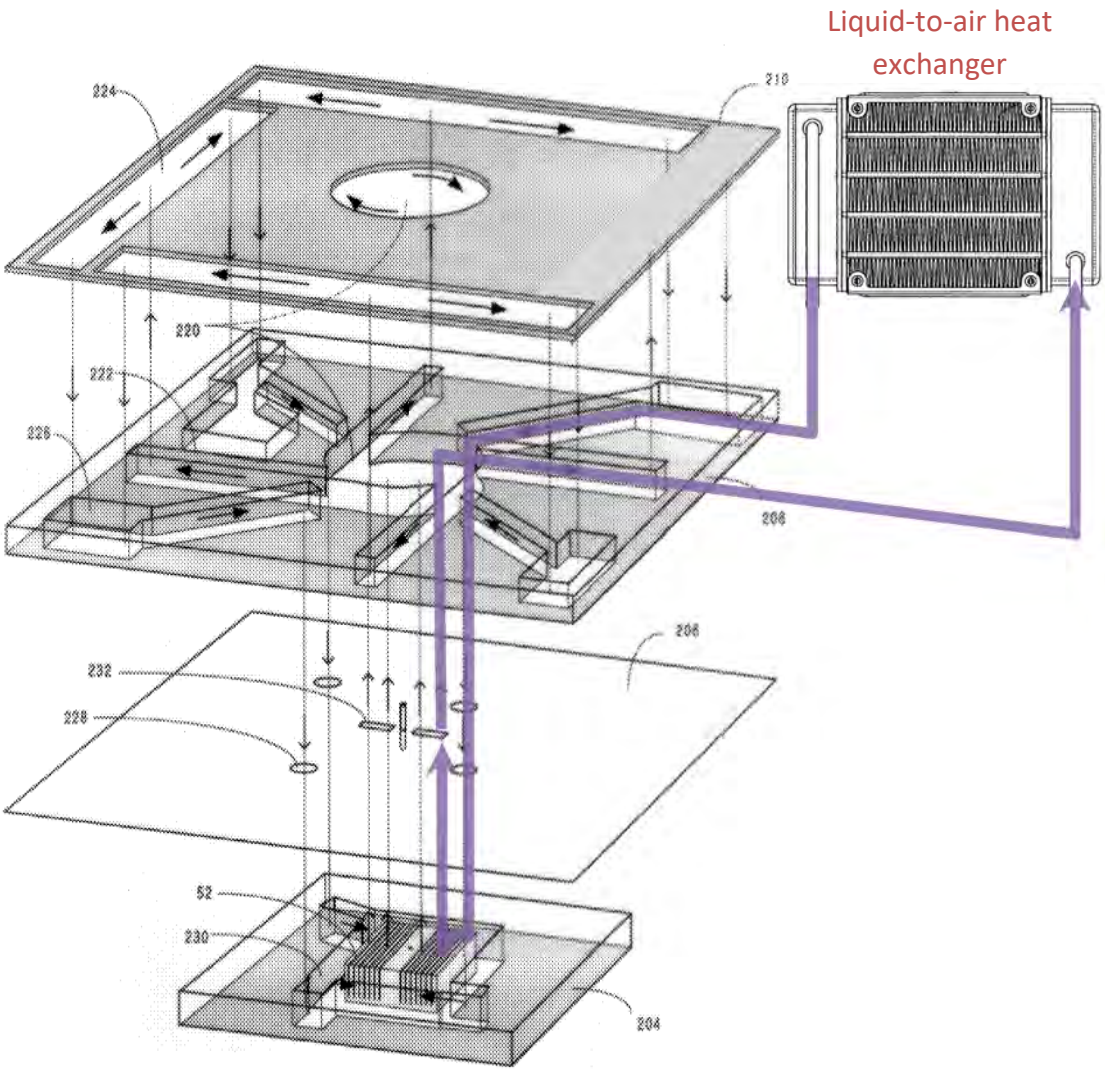

(Ex-1008; FIG. 7 (modified and annotated); Ex-1003, ¶239.)

[Claim 27] "The cooling system of claim 15, wherein the pump chamber and the thermal exchange chamber are fluidly coupled together by one or more passages, the one or more passages including a passage configured to direct cooling liquid from the pump chamber directly into the thermal exchange chamber."

Batchelder in view of Duan teaches [Claim 27] for the same reasons discussed above for [1-d]. A POSITA would have understood that the fluid going through from the pump chamber through a passage itself and the intermediate member

(medial sheet) is still directed by the passage to the pump chamber "directly." The is because claim 15 recites that the thermal exchange chamber is defined by the intermediate member and the heat exchanging interface, meaning any liquid flowing into the thermal exchange chamber will have to flow through at least either the intermediate member or the heat exchanging interface via a passage. (Ex-2003, ¶240.)

7. Batchelder teaches claim 30.

[30-a] "The cooling system of claim 15, wherein the pump chamber and thermal exchange chamber are fluidly coupled together by one or more passages, and"

Batchelder in view of Duan teaches [30-a] for the same reasons discussed above for [1-c] and [1-d]. (Ex-1003, ¶241.)

[30-b] "the reservoir further includes an inlet configured to direct the cooling liquid into the reservoir and an outlet configured to discharge the cooling liquid from the reservoir."

Batchelder in view of Duan teaches [30-b] for the same reasons discussed above for [claim 19] and [claim 23]. (Ex-1003, ¶242.)

D. GROUND 6: Claim 8 is obvious over Batchelder in view of Duan and further in view of Laing.

[Claim 8] "The cooling system of claim 1, wherein the heat-exchanging interface includes one of copper and aluminum."

Claim 8 is obvious over Batchelder in view of Duan and further in view of Laing for the same reasons discussed above in Grounds 3 and 4.

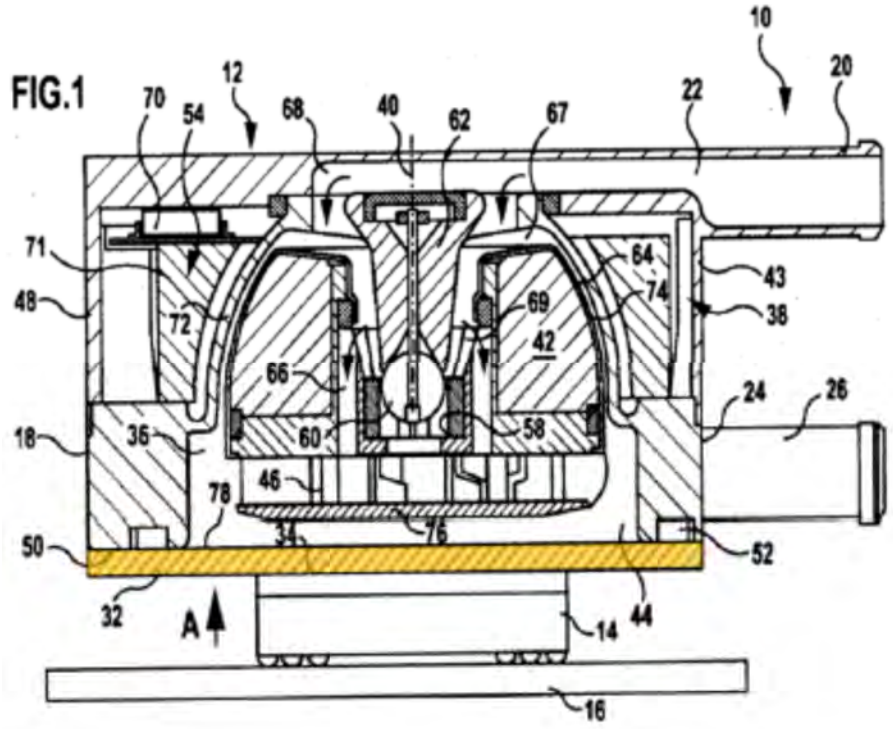

(Ex-1003, ¶243.)

A POSITA would have been motivated to combine Laing with Duan, Duan-I, and/or Batchelder. Like Duan, Duan-I, and/or Batchelder, Laing attempts to solve similar issues — how to cool, with liquids, the increasing temperature of increasingly powerful semiconductor devices (Ex-1005, [0002]-[0004]), which motivates a POSITA to combine the teachings of these two references. *See KSR*, 550 U.S. at 419-21; (Ex-1003, ¶244.) A POSITA would have been further motivated to combine the teachings of these references in light of their specific disclosures. Laing teaches that "the thermal contact element is made from a metallic material, such as copper, in order to achieve a high thermal conductivity, in order, in turn, to allow optimum dissipation of heat from an object[.]" (Ex. 1027, [0015].) Accordingly, a

POSITA would have been motivated to apply Laing's copper "heat exchange interface" to Duan, Duan-I, and/or Batchelder "to achieve a high thermal conductivity…to allow optimum dissipation of heat from" the heat generating component. (Ex-1003, ¶245.) A POSITA would know that copper is normally used in electronic cooling applications when the thermal conductivity of the aluminum is not sufficiently high and/or corrosion from water needs to be prevented and a coating is not used. (*Id.*)

IX. SECONDARY CONSIDERATIONS

Petitioner is unaware of any secondary considerations that would overcome the strong showing of obviousness provided by the Petition. *See Tokai Corp. v. Easton Enters., Inc.*, 632 F.3d 1358, 1370 (Fed. Cir. 2011).

X. PAYMENT OF FEES UNDER 37 C.F.R. §42.15

The undersigned provides online USPTO Deposit Account No. 50-2638 to pay the required fees at the time of filing this Petition, as set forth in 37 C.F.R. § 42.15(a). The undersigned further authorizes the U.S. Patent & Trademark Office to charge this Deposit Account for any additional fees (or fee deficiency) that might be due in connection with this Petition.

XI. REQUIREMENTS FOR IPR UNDER 37 C.F.R. §42.104

A. Grounds for Standing Under 37 C.F.R. §42.104(a)

Petitioner certifies that the '764 patent is available for IPR and that Petitioner is not barred or otherwise estopped. Because Petitioner files an accompanying motion for joinder within one month of institution in IPR2022-01317, this petition is timely under 35 U.S.C. §315(c) and 37 C.F.R. §42.122.

B. Identification of Challenge Under 37 C.F.R. §42.104(b) and Relief Requested

Petitioner respectfully requests that the Challenged Claims of the '764 patent be cancelled based on the six grounds of unpatentability detailed above. (*See* §II, *supra*.) This Petition is supported by the declaration of Dr. Karamanis, an engineer holding a Ph.D. in Mechanical Engineering from Tufts University. (Ex-1003, ¶¶2-4.)

XII. MANDATORY NOTICES UNDER 37 C.F.R. §42.8(a)(1) FOR *INTER PARTES* REVIEW

A. Real Party in Interest Under 37 C.F.R. §42.8(b)(1)

The real party-in-interest in this petition is CMC, located at 398 Xinhu First Road, 6th Floor, Neihu District, Taipei 114065, Taiwan, R.O.C.[3]

---

[3] Patent Owner may incorrectly allege that CMI USA, Inc. ("CMI"), a separate corporate entity different from CMC, is also a real party in interest ("RPI"). Not so.

Patent Owner originally sued both CMI and CMC in *Asetek Danmark A/S v. CMI USA, Inc.*, Case No. 4:13-cv-00457-JST (N.D. Cal.) for alleged infringement of the '764 patent, *but dismissed CMC with prejudice before trial*. (*Id.*, Docs. 84-85.) CMI went to trial alone without CMC, and a judgment against *only* CMI was rendered. (*See, e.g.*, *id.*, Docs. 219, 249, 339.) During post-trial proceedings, Patent Owner incorrectly alleged privity between CMC and CMI, causing the district court to enter an injunction against CMC as a third party (*id.*, Doc. 322), *which was then vacated by the Federal Circuit* (*id.*, Doc. 375). After the vacatur, CMC settled with Patent Owner under a consent judgment (*id.*, Doc. 399), in which "[n]o liability of CMC ha[d] been established against or admitted by CMC, but to resolve the case and to conserve resources, CMC agree[d] to be bound by" the injunction. Subsequently, Patent Owner incorrectly accused CMC and CMI of violating the injunction in a motion for contempt against both CMC and CMI, which was denied by the district court. (*See id.*, Doc. 426.) Because of Patent Owner's motion for contempt against them jointly, CMC and CMI filed an action in June 2021 seeking a declaratory judgment of non-infringement of the '764 patent (among others), *Cooler Master Co., Ltd. et al v. Asetek Danmark A/S*, Case No. 5:21-cv-04627-EJD (N.D. Cal.). The case was then stayed due to related IPR proceedings. (*Id.*, Doc. 42.) Throughout the entire history, no privity between CMC and CMI, nor any abetting of CMI by CMC, have ever been established. CMI also does not financially support, nor have any control over, the present IPR petition and joinder proposed by CMC.

B. Related Matters Under 37 C.F.R. §42.8(b)(2)

Two co-pending federal district court cases may affect or be affected by the decision in this proceeding: *Cooler Master Co., Ltd. et al v. Asetek Danmark A/S*, Case No. 5:21-cv-04627-EJD (N.D. Cal.) and *Asetek Danmark A/S v. Shenzhen Apaltek Co*., No. Case No. 3:22-cv-06179-WHO (N.D. Cal.). The undersigned is unaware of any other judicial or administrative matter that would affect, or be affected by, a decision in the proceeding. Related IPR matters include IPR2020-00522, IPR2020-00523, and IPR2020-00524, which were filed in February 2020 and concluded in August 2021, IPR2021-01195 against U.S. Patent No. 10,613,601 and IPR2021-01196 against U.S. Patent No. 10,599,196, which were terminated in October 2022.

C. Lead and Backup Counsel Under 37 C.F.R. §42.8(b)(3) and Service Information under 37 C.F.R. §42.8(b)(4)

Petitioner designates the following lead and backup counsel:

Lead Counsel	Backup Counsel
James L. Ryerson (Reg. No. 64,617) Greenberg Traurig, LLP 500 Campus Drive, Suite 400 Florham Park, NJ 07932 Telephone: 973-443-3246 Facsimile: 973-295-1346 RyersonJ@gtlaw.com	Heath J. Briggs (Reg. No. 54,919) Greenberg Traurig, LLP 1144 15th St., Suite 3300 Denver, CO 80202 Telephone: 303-685-7418 Facsimile: 720-904-6118 BriggsH@gtlaw.com Kyle D. Chen (*pro hac vice* forthcoming) Greenberg Traurig, LLP

Lead Counsel	Backup Counsel
	1900 University Avenue, 5th Floor East Palo Alto, CA 94303 Telephone: 650.289.7887 Facsimile: 650.328.8508 E-mail: kchen@gtlaw.com

Service on Petitioner may be made by mail or hand delivery to: Greenberg Traurig, LLP, 500 Campus Drive, Suite 400, Florham Park, NJ 07932. Petitioner also consents to and prefers electronic service by emailing counsel of record (shown above).

Respectfully submitted,

GREENBERG TRAURIG, LLP

Date: March 6, 2023

By: */James L. Ryerson/*

James L. Ryerson (Reg. No. 64,617)

Counsel for Petitioner

CERTIFICATION OF WORD COUNT UNDER 37 C.F.R. §42.24(D)

Petitioner certifies that the word count in this Petition is 13,989 words, as counted by the word-processing program (Microsoft Word 2016) used to generate this Petition, where such word count excludes the table of contents, table of authorities, mandatory notices, certificate of service, appendix of exhibits, and this certificate of word count. This Petition is in compliance with the 14,000 word limit set forth in 37 C.F.R. §42.24(a)(1)(i).

CERTIFICATE OF SERVICE

The undersigned certifies that a true and correct copy of the Petition together with all exhibits identified in the above Table of Exhibits and Petitioner's Power of Attorney, were served on counsel of record for the '764 patent by Federal Express and electronic mail. Both parties consented to electronic service prior to the filing of this Petition.

Eric Rapiti
Eric.Raciti@finnegan.com
FINNEGAN, HENDERSON, FARABOW, GARRETT & DUNNER LLP
Two Seaport Lane
Boston, MA 02210-2001

Robert F. McCauley
robert.mccauley@finnegan.com
Arpita Bhattacharyya
arpita.bhattacharyya@finnegan.com
FINNEGAN, HENDERSON, FARABOW, GARRETT & DUNNER LLP
3300 Hillview Avenue
Palo Alto, California 94304

William Esper
William.Esper@finnegan.com
FINNEGAN, HENDERSON, FARABOW, GARRETT & DUNNER LLP
1875 Explorer St Suite 800
Reston, VA 20190
FINNEGAN, HENDERSON, FARABOW, GARRETT & DUNNER LLP
901 NEW YORK AVENUE, NW
WASHINGTON DC 20001-4413

Respectfully submitted,

GREENBERG TRAURIG, LLP

Date: March 6, 2023

By: */James L. Ryerson/*

James L. Ryerson (Reg. No. 64,617)

Counsel for Petitioner