Trials@uspto.gov
571-272-7822

Paper No. 11
Entered: January 22, 2024

UNITED STATES PATENT AND TRADEMARK OFFICE

BEFORE THE PATENT TRIAL AND APPEAL BOARD

SHENZHEN APALTEK CO., LTD. And
COOLER MASTER CO., LTD.,
Petitioner,

v.

ASETEK DANMARK A/S,
Patent Owner.

IPR2022-01317*
Patent 8,245,764 B2

Before WILLIAM V. SAINDON, KEVIN W. CHERRY, and JASON W. MELVIN, *Administrative Patent Judges*.

MELVIN, *Administrative Patent Judge*.

JUDGMENT
Final Written Decision
Determining All Challenged Claims Unpatentable
35 U.S.C. § 318(a)

---

* Cooler Master Co., Ltd., which filed a petition in IPR2023-00668, has been joined as a party to this proceeding.

I. INTRODUCTION

ShenZhen Apaltek Co., Ltd. ("Petitioner") filed a Petition (Paper 1, "Pet.") requesting institution of *inter partes* review of claims 1–30 of U.S. Patent No. 8,245,764 B2 (Ex. 1001, "the '764 patent"). Asetek Danmark A/S ("Patent Owner") filed a Preliminary Response. Paper 5. As authorized, Petitioner filed a Preliminary Reply. Paper 6. Pursuant to 35 U.S.C. § 314 and 37 C.F.R. § 42.4(a), we instituted review. Paper 7. We joined Cooler Master Co., Ltd., as a Petitioner here pursuant to a motion filed in IPR2023-00668. Paper 9. No party filed a paper after institution.

We have jurisdiction under 35 U.S.C. § 6. This is a Final Written Decision under 35 U.S.C. § 318(a) as to the patentability of claims 1–30 of the '764 patent. We hold that Petitioner has demonstrated by a preponderance of the evidence that the challenged claims are unpatentable.

A. REAL PARTIES IN INTEREST

Petitioner ShenZhen Apaltek identifies itself as the real party in interest. Pet. 146. Petitioner Cooler Master identifies itself as the real party in interest. IPR2023-00668, Paper 3, 146. Patent Owner identifies Asetek Danmark A/S, Asetek USA, Inc., Asetek A/S, and Asetek Holdings, Inc. as the real parties in interest for Patent Owner. Paper 4, 1 (Patent Owner's Mandatory Notices).

B. RELATED MATTERS

The parties identify the following related litigations: *Asetek Danmark A/S v. CoolIT Systems, Inc.*, No. 3:19-cv-00410 (N.D. Cal.); *Cooler Master Co., Ltd. v. Asetek Danmark A/S*, No. 4:21-cv-04627 (N.D. Cal.); and *Asetek*

Danmark A/S v. Shenzhen Apaltek Co., Ltd., No. 6:21-cv-00501 (W.D. Tex.) (transferred to N.D. Cal., May 6, 2022). Pet. 147; Paper 4, 1.

The parties also identify the following Office proceedings: IPR2020-00522, IPR2020-00523, and IPR2020-00524, which were filed in February 2020 and concluded in August 2021, IPR2021-01195 against U.S. Patent No. 10,613,601 and IPR2021-01196 against U.S. Patent No. 10,599,196. Pet. 147; Paper 4, 1–2.

C. THE '764 PATENT

The '764 patent is titled "Cooling System for a Computer System." Ex. 1001, code (54). It issued from an application filed October 7, 2011, as a continuation of and claims priority to a PCT application filed May 6, 2005. *Id.* at code (63).

The '764 patent relates to a liquid-cooling system for a computer system. *Id.* at Code (57). The specification explains, at the time of the invention, air cooling arrangements were the most-used cooling system for cooling central processing units (CPUs) in computer systems. *Id.* at 1:17–31. An alternative design known at the time of the invention was to use a cooling liquid circulating inside a closed system by means of a pumping unit with a heat exchanger past which the cooling liquid circulates. *Id.* at 1:32–36. The specification contends that liquid cooling is generally more efficient and quieter than air cooling, but that a liquid cooling design consists of "many components," which increases the total installation time, size, and risk of leakage of the cooling liquid from the system. *Id.* at 1:37–47. Thus, one object of the invention is to provide a small and compact liquid-cooling solution that is more efficient than existing air-cooling arrangements and can be produced at low cost enabling high production volumes, be easy-to-use

and implement, can be used with existing CPU types and computer systems, and requires a low level of maintenance or no maintenance at all. *Id.* at 1:51–60.

An illustrative embodiment of such a device is depicted in Figures 7 and 8, reproduced below.

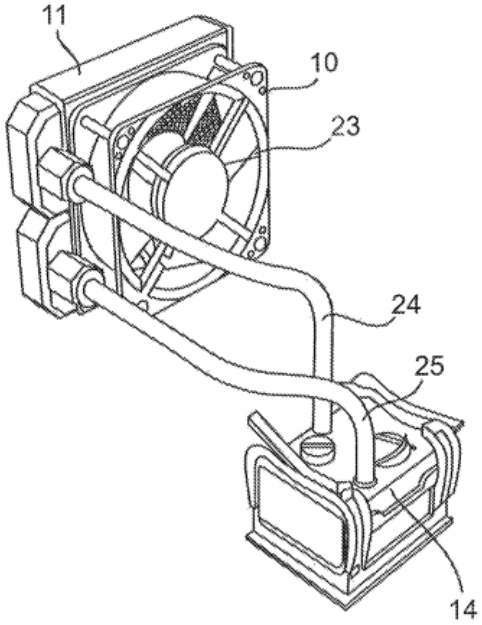

FIG. 7

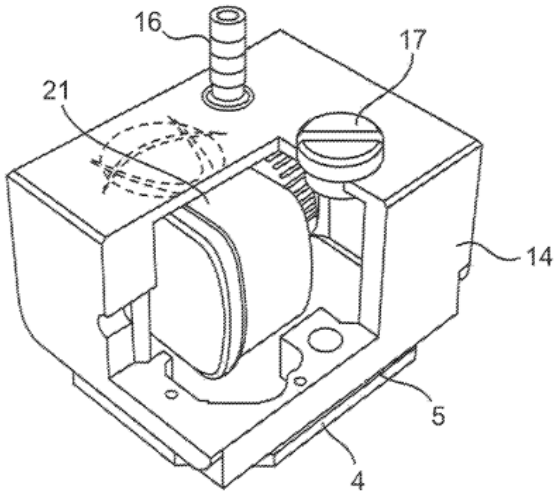

FIG. 8

Figure 7[1] is a perspective view of the cooling system showing reservoir housing 14 with the heat exchanging surface 5 (shown in Figure 8) and the pump 21 (shown in Figure 8) inside the reservoir. *Id.* at 15:61–16:7. Figure 8 is a cut-out view into reservoir housing 14, when the reservoir, pump 21, and

[1] It appears the specification transposes the description of Figure 7 with that of Figure 8. We refer to the description of "Figure 8" in the specification in our discussion of Figure 7, and we refer to the specification's discussion of "Figure 7" in our discussion of Figure 8.

heat exchanging surface 4 are situated inside the reservoir. *Id.* at 15:28–30. The reservoir has a tube inlet connection (not shown in Figure 8) through which the cooling liquid enters the reservoir. *Id.* at 15:30–32. From the tube inlet connection, the cooling liquid flows through the reservoir passing heat exchanging surface 4 and enters the inlet of the pump. *Id.* at 15:32–35. After the cooling liquid flows through the pump, the cooling liquid passes out of the outlet of the pump and further out through tube outlet connection 16. *Id.* at 15:35–37. As shown in Figure 7, tube inlet connection and tube outlet connection 16 are connected to heat radiator 11 by means of connecting tubes 24 and 25. *Id.* at 15:64–67. Cooling liquid flows into and out of the reservoir and the heat radiator through connecting tubes 24 and 25, respectively. *Id.* Heat radiator 11 (shown in Figure 7) cools the cooling liquid before it passes back into the reservoir. *Id.* at 15:67–16:4.

The reservoir may be provided with channels or segments for establishing a certain flow-path for the cooling liquid through the reservoir to prevent the cooling liquid passing the reservoir too quickly to take up a sufficient amount of heat from the heat exchanging surface. *Id.* at 16:25–42.

Figures 17 and 20 show the internal structures of a preferred embodiment of the reservoir according to the invention and are reproduced below. *Id.* at 21:12–22:59.

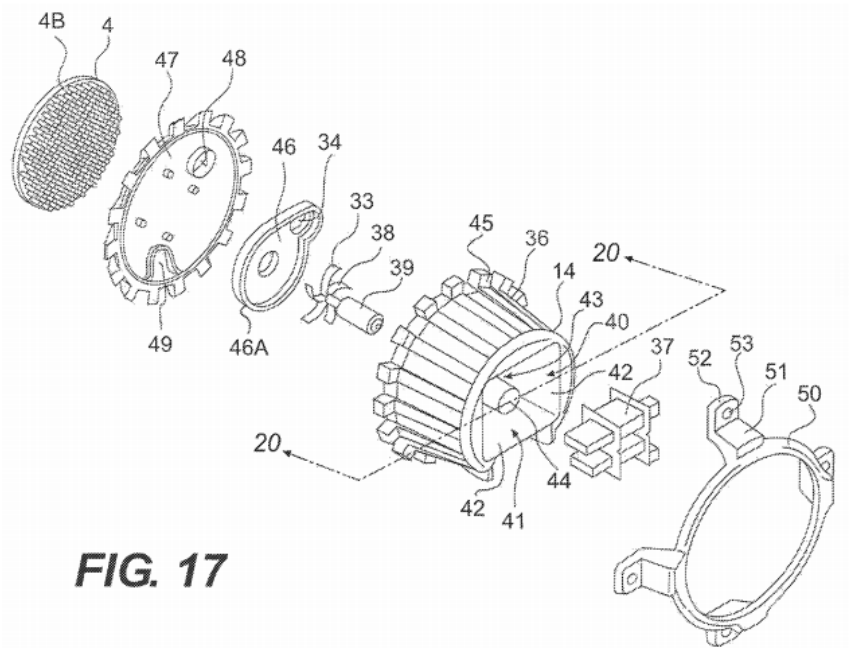

FIG. 17

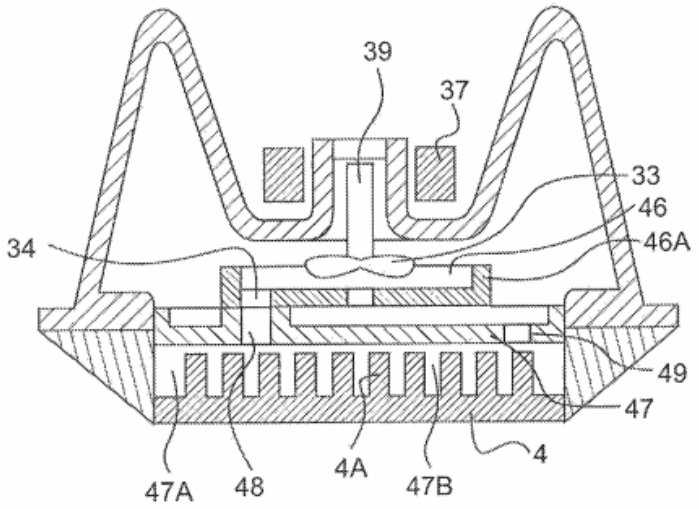

FIG. 20

Figure 17 is an exploded perspective view of a preferred embodiment of a reservoir and a pump and the heat exchanging surface. *Id.* at 9:62–64. Figure 20 is a simplified schematic showing a cross-sectional view of the reservoir along plane 20-20 of Figure 17. *Id.* at 10:4–5. Reservoir housing 14 as shown in Figures 17 and 20 is in the form of a double-sided chassis

having a substantially conical, circular configuration with stiffening ribs 36 extending axially along the exterior of the reservoir housing and configured to mount an electrical motor. *Id.* at 21:14–21. Reservoir housing 14 has recess 40 intended for accommodating stator 37 of an electrical motor driving impellor 33 of the pump, which is attached to shaft 38 of rotor 39 of the electric motor. *Id.* at 21:28–40. The specification explains that "a liquid-proof division" is made between rotor 39 of the motor, which is submerged in the cooling liquid, and the stator 37 of the pump. *Id.* at 21:41–51.

The enclosed space between impeller 33 and heating exchanging interface 4 is divided into two separate chambers by impeller cover 46A and intermediate member 47, as shown in Figure 20. The chamber formed by impeller 33 and impeller cover 46A is described as "pump chamber 46" and has outlet 34. *Id.* at 22:26–53.

D. Challenged Claims

Challenged claim 1 is independent and is reproduced below:

1. A cooling system for a heat-generating component, comprising:

    a double-sided chassis adapted to mount a pump configured to circulate a cooling liquid, the pump comprising a stator and an impeller, the impeller being positioned on the underside of the chassis and the stator being positioned on the upper side of the chassis and isolated from the cooling liquid;

    a reservoir adapted to pass the cooling liquid therethrough, the reservoir including:

    a pump chamber including the impeller and formed below the chassis, the pump chamber being defined by at least an impeller cover having one or more passages for the cooling liquid to pass through;

a thermal exchange chamber formed below the pump chamber and vertically spaced apart from the pump chamber, the pump chamber and the thermal exchange chamber being separate chambers that are fluidly coupled together by the one or more passages; and

a heat-exchanging interface, the heat-exchanging interface forming a boundary wall of the thermal exchange chamber, and configured to be placed in thermal contact with a surface of the heat-generating component; and

a heat radiator fluidly coupled to the reservoir and configured to dissipate heat from the cooling liquid.

Id. at 27:39–64. Claims 10 and 15 are also independent and recite generally similar limitations. *See id.* at 28:27–43, 28:57–29:13. The other challenged claims depend, directly or indirectly, from claim 1, 10, or 15. *Id.* at 27:66–30:12; Ex. 1002, 1:18–2:35.

E. Prior Art and Asserted Grounds

Petitioner asserts the following grounds of unpatentability:

Claim(s) Challenged	35 U.S.C. §	Reference(s)/Basis
1–19, 21–27, 29, 30	103	Duan[2]
1–19, 21–27, 29, 30	103	Duan, Duan-I[3]
8	103	Duan, Laing[4]
8	103	Duan, Duan-I, Laing

[2] U.S. Pat. Appl. Pub. No. 2006/0185830 A1, pub. Aug. 24, 2006 (Ex. 1006).
[3] U.S. Pat. Appl. Pub. No. 2006/0185829 A1, pub. Aug. 24, 2006 (Ex. 1007).
[4] U.S. Pat. Appl. Pub. No. 2004/0052663 A1, pub. Mar. 18, 2004 (Ex. 1015).

Claim(s) Challenged	35 U.S.C. §	Reference(s)/Basis
1–30	103	Batchelder[5], Duan
8	103	Batchelder, Duan, Laing

Pet. 3. Petitioner also relies on the Declaration of George Karamanis, Ph.D. Ex. 1003.

II. ANALYSIS

A. LEVEL OF ORDINARY SKILL IN THE ART

Petitioner proposes that a person of ordinary skill

> would have been knowledgeable regarding liquid cooling systems for computer systems, would have had a Bachelor of Science (B.S.) in electrical or mechanical engineering, or similar advanced post-graduate education in this area, or would have possessed at least 2–3 years of experience in liquid cooling systems for computer systems or similar systems. A POSITA would be knowledgeable of the concepts, components, and their functions described as "prior art" in the '355 patent such as, e.g., pumps, radiators, fans, reservoirs, and other techniques of heat dissipation and liquid cooling. (Ex-1001,1:11–47.) In addition, a POSITA would be knowledgeable about electric motors and their components (e.g., electromagnetic coils, rotors, stators, AC/DC motors, etc.)

Pet. 5–6 (citing Ex. 1003 ¶¶ 13–18). Patent Owner has not proposed a level of ordinary skill in the art. We adopt Petitioner's proposed level of ordinary skill as it appears to be consistent with the level of skill reflected by the specification and in the asserted prior art references.

[5] U.S. Pat. No. 6,019,165, iss. Feb. 1, 2000 (Ex. 1008).

B. Claim Construction

For an *inter partes* review petition filed after November 13, 2018, we construe claim terms "using the same claim construction standard that would be used to construe the claim in a civil action under 35 U.S.C. 282(b)." 37 C.F.R. § 42.100(b) (2019).

Petitioner submits that, in the related litigation, the parties "have stipulated to construe the term 'reservoir' in the '764 patent to mean 'single receptacle defining a fluid flow path.'" Pet. 6 (citing Ex. 1005, 2; Ex. 1003 ¶ 19). We apply that definition here.

Based on our analysis of the proceeding, we conclude that no other claim term requires express construction. *See Nidec Motor Corp. v. Zhongshan Broad Ocean Motor Co.*, 868 F.3d 1013, 1017 (Fed. Cir. 2017).

C. Obviousness Based on Duan

Duan's system includes a cooling plate module with a cooling plate integrally formed with a liquid driving module such that the layout of the cooling plate module can be minimized to reduce space. Ex. 1006 ¶ 7. Figure 6, reproduced below, is a view of Duan's "liquid cooling cyclic mechanism." *Id.* ¶ 17.

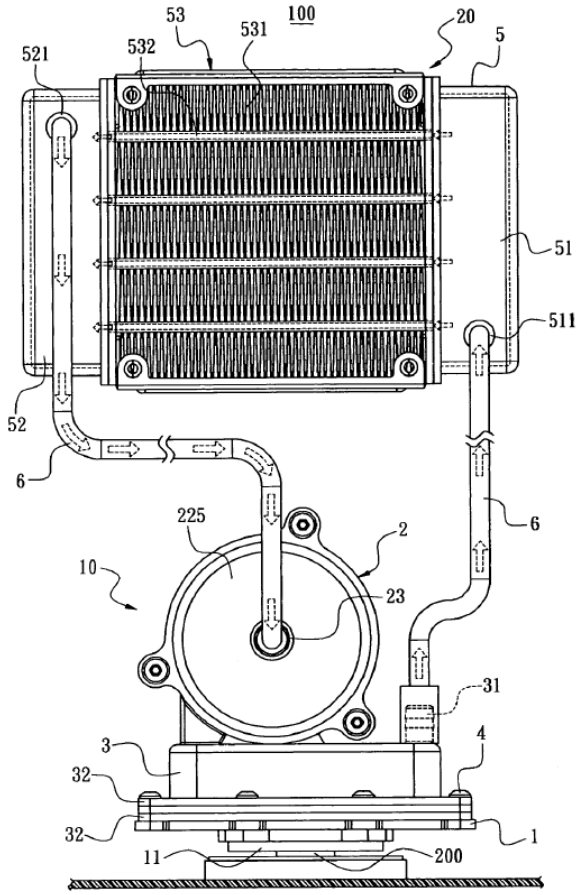

FIG. 6

Duan's Figure 6 shows liquid cooling cyclic mechanism 100 for cooling CPU 200. *Id.* ¶ 22. Liquid cooling cyclic mechanism 100 comprises cooling module 10 and water tank module 20, which is connected with cooling plate module 10 through ducts. *Id.* Cooling plate module 10 includes cooling plate 1, liquid driving module 2, and heat absorbing interface 11. *Id.* Heat absorbing face 11 is in contact with CPU 200 for dissipating heat generated by the CPU. *Id.* ¶ 26. Water tank 20 includes cooling stage 53. *Id.* ¶ 25. Driven by liquid driving module 2 (a pump), liquid heated by CPU 200 flows to cooling stage 53, where heat dissipates through heat-dissipating fins 531, and the resulting cool liquid flows back to cooling plate module 10. *Id.* ¶¶ 23–26.

1. Claim 1

Petitioner maps the language of independent claim 1 to Duan's disclosures, modified as described below by those of Duan-I. Pet. 26–48.

Petitioner asserts that, "[g]iven the known 'compact trend of computer[s]' recognized by Duan [¶0006], a POSITA would have been motivated to rotate Duan's liquid driving module 2 (pump) counterclockwise by 90 degrees in Figure 7 to reduce the system's overall height, in view of Duan-I." Pet. 32 (second alteration in original) (citing Ex. 1003 ¶ 55). Petitioner relies on the similar cooling modules disclosed in Duan and Duan-I, depicted in Figure 7 of each reference and reproduced below:

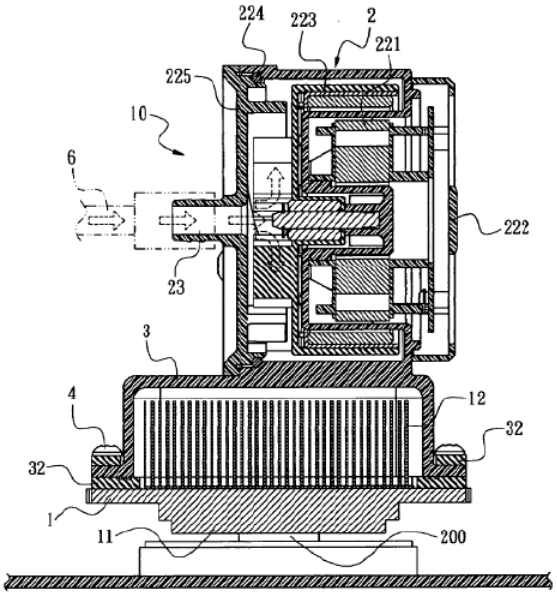

FIG. 7

Duan

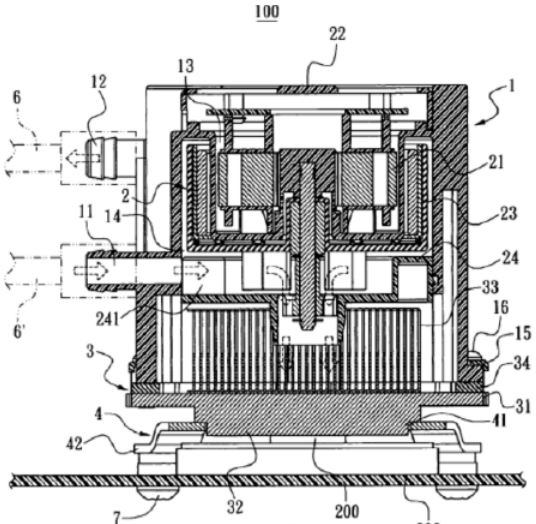

FIG. 7

Duan-I

Id. (quoting Ex. 1006, Fig. 7; Ex. 1007, Fig. 7). Duan's Figure 7 depicts cooling plate module 10 comprising liquid driving module 2 located on top of cooling plate 1 with impeller stage 223 having a rotational axis along the surface of CPU 200 being cooled. Ex. 1006 ¶¶ 22, 23, 27. Duan-I's Figure 7

depicts liquid-cooling heat dissipation apparatus 100 comprising liquid driving unit 2 located on top of cooling plate module 3 with impeller stage 23 having a rotational axis normal to the surface of CPU 200 being cooled. Ex. 1007 ¶¶ 20–22, 28.

Thus, Petitioner identifies the reservoir of its asserted, modified system in an annotated illustration, reproduced below:

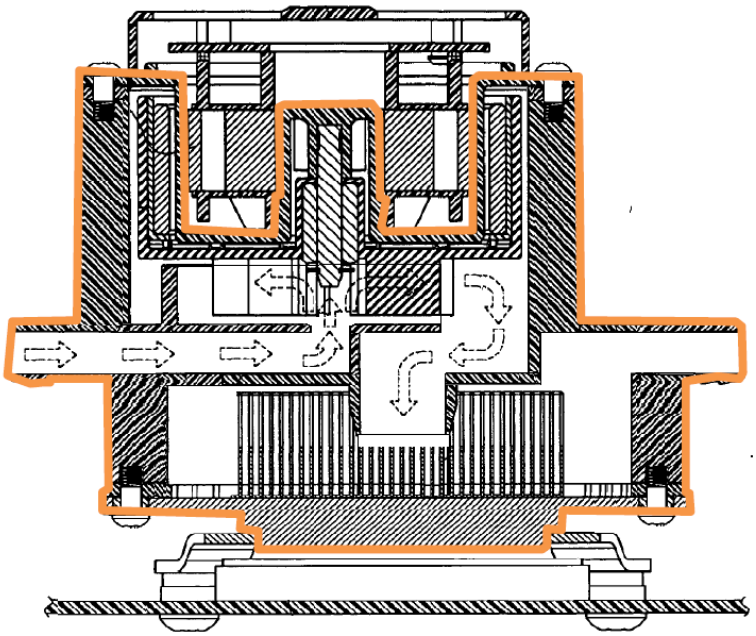

Pet. 37 (quoting Ex. 1003 ¶ 63). Petitioner's annotated illustration shows Duan's modified cooling plate module with the asserted reservoir outlined in orange. Petitioner reasons that skilled artisans had reason to modify Duan's system as taught by Duan-I in light of the "compact trend of computer[s]" that Duan recognized. Pet. 32 (quoting Ex. 1006 ¶ 6). Petitioner contends that doing so would have provided the benefit of reducing the system's overall height. *Id.* (citing Ex. 1003 ¶ 55). We agree that Petitioner's contentions support the modification with rational underpinning.

Patent Owner does not challenge Petitioner's contentions, as it has filed no Patent Owner Response. We have reviewed Petitioner's contentions and conclude that they show by a preponderance of the evidence that claim 1's subject matter would have been obvious over Duan and Duan-I. *See* Pet. 26–87. We adopt Petition's unchallenged contentions as our analysis.

2. *Additional claims*

For claims 2–19, 21–27, 29, and 30, Petitioner provides contentions showing how the combination of Duan and Duan-I renders the claims obvious. Pet. 49–87. For claim 8, Petitioner provides contentions that Laing also discloses the additional limitation, and that skilled artisans had reason to incorporate Laing's teachings. Pet. 87–89.

Patent Owner does not challenge Petitioner's contentions, as it has filed no Patent Owner Response. We have reviewed Petitioner's contentions and conclude that they show by a preponderance of the evidence that the subject matter of claims 2–19, 21–27, 29, and 30 would have been obvious over Duan and Duan-I, and that the subject matter of claim 8 would have been obvious over Duan, Duan-I, and Laing. *See* Pet. 26–87. We adopt the Petition's unchallenged contentions as our analysis.

D. Obviousness Based on Batchelder

Batchelder discloses an "apparatus to transfer heat from a heat source to a heat absorber" using "an active thermal spreader plate with internal flow channels, a recirculating heat transfer fluid, and a means to impel the heat transfer fluid using an external moving magnetic field." Ex. 1008, code (57).

1. Claim 1

For the obviousness grounds using Batchelder as the primary reference, Petitioner focuses primarily on Batchelder's Figure 7, reproduced below:

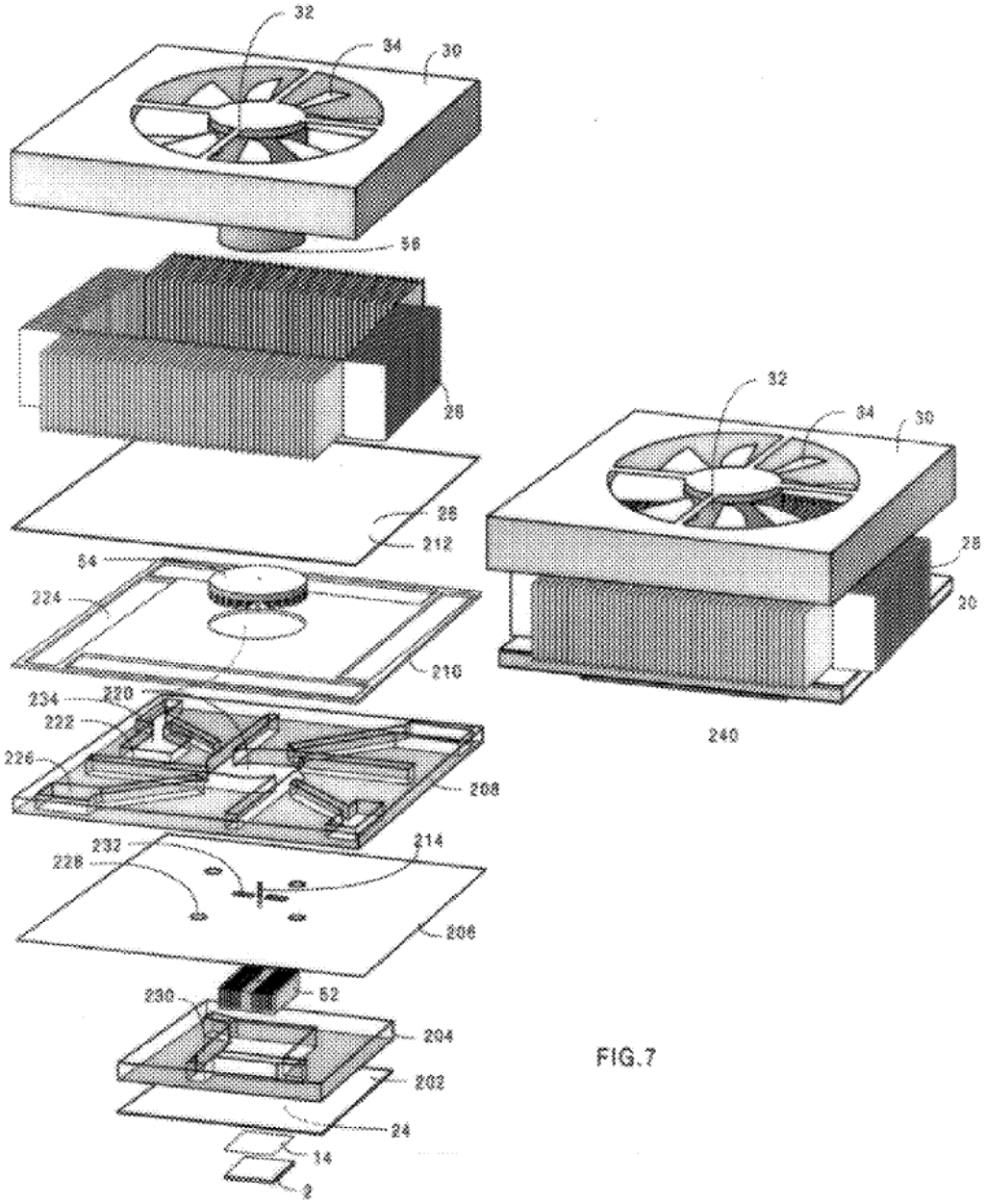

FIG.7

Figure 7 shows a heat sink for heat source 2, including bottom sheet 202 of an active spreader plate assembly, lower stamped plate 204, medial

sheet 206, upper stamped plate 208, channel forming sheet 210, impeller 52, and top sheet 212. Ex. 1008, 7:23–8:11.

Petitioner maps the claimed double-sided chassis to Batchelder's top sheet 212. Pet. 90–92. Petitioner asserts that skilled artisans would have modified Batchelder's design such that impeller 52 is driven directly by a stator coil, as in Duan, because "control over the impeller is better if driven directly by the stator, which can also provide a stronger, more effective rotating magnetic field." *Id.* at 92 (citing Ex. 1003 ¶ 164).

Petitioner maps the claimed reservoir to Batchelder's stack of sheets and stamped plates, which form chambers for fluid flow. *Id.* at 95–98. Petitioner contends Batchelder's reservoir has the claimed pump chamber as "the space in the channel forming sheet 210 and the upper stamped plate 208." *Id.* at 98–101. Petitioner contends Batchelder's reservoir has the claimed thermal exchange chamber as "the center space in the lower stamped plate 204." *Id.* at 101–03. Petitioner contends Batchelder's reservoir has the claimed heat-exchanging interface as "bottom surface 24" in the bottom sheet 202. *Id.* at 104–05. Finally, Petitioner contends that skilled artisans would have had reason "to connect Batchelder's heat spreader plate to a radiator, a well-known component used to transfer thermal energy (e.g., heat) from one medium to another, like the one taught in Duan." *Id.* at 105–12. Petitioner reasons that doing so would "help further cool the heated cooling liquid" and "further increase heat management efficiency." *Id.* at 106 (citing Ex. 1003 ¶¶ 180–181). We agree that Petitioner's contentions support the modification with rational underpinning.

Patent Owner does not challenge Petitioner's contentions, as it has filed no Patent Owner Response. We have reviewed Petitioner's contentions

and conclude that they show by a preponderance of the evidence that claim 1's subject matter would have been obvious over Batchelder and Duan. *See* Pet. 89–112. We adopt the Petition's unchallenged contentions as our analysis.

2. *Additional claims*

For claims 2–30, Petitioner provides contentions showing how the combination of Batchelder and Duan renders the claims obvious. Pet. 113–43. For claim 8, Petitioner provides contentions that Laing also discloses the additional limitation and that skilled artisans had reason to incorporate Laing's teachings. Pet. 143–45.

Patent Owner does not challenge Petitioner's contentions, as it has filed no Patent Owner Response. We have reviewed Petitioner's contentions and conclude that they show by a preponderance of the evidence that the subject matter of claims 2–30 would have been obvious over Batchelder and Duan, and that the subject matter of claim 8 would have been obvious over Batchelder, Duan, and Laing. *See* Pet. 113–45. We adopt the Petition's unchallenged contentions as our analysis.

III. CONCLUSION[6]

We conclude Petitioner has shown the challenged claims are unpatentable. In summary

[6] Should Patent Owner wish to pursue amendment of the challenged claims in a reissue or reexamination proceeding subsequent to the issuance of this decision, we draw Patent Owner's attention to the April 2019 *Notice Regarding Options for Amendments by Patent Owner Through Reissue or Reexamination During a Pending AIA Trial Proceeding. See* 84 Fed. Reg. 16,654 (Apr. 22, 2019). If Patent Owner chooses to file a reissue application or a request for reexamination of the challenged patent, we

Claim(s)	35 U.S.C. §	Reference(s)/Basis	Claims Shown Unpatentable	Claims Not Shown Unpatentable
1–19, 21–27, 29, 30	103	Duan	1–19, 21–27, 29, 30	
1–19, 21–27, 29, 30	103	Duan, Duan-I	1–19, 21–27, 29, 30	
8	103	Duan, Laing	8	
8	103	Duan, Duan-I, Laing	8	
1–30	103	Batchelder, Duan	1–30	
8	103	Batchelder, Duan, Laing	8	
Overall Outcome			1–30	

IV. ORDER

Accordingly, it is

ORDERED that Petitioner has shown by a preponderance of the evidence that claims 1–30 of the ’764 patent are unpatentable; and

FURTHER ORDERED that, because this is a Final Written Decision, parties to the proceeding seeking judicial review of the decision must comply with the notice and service requirements of 37 C.F.R. § 90.2.

---

remind Patent Owner of its continuing obligation to notify the Board of any such related matters in updated mandatory notices. *See* 37 C.F.R. §§ 42.8(a)(3), (b)(2).

For PETITIONER:

James Ryerson
Heath Briggs
GREENBERG TRAURIG, LLP
ryersonj@gtlaw.com
briggsh@gtlaw.com

For PATENT OWNER:

Eric P. Raciti
Arpita Bhattacharyya
FINNEGAN, HENDERSON, FARABOW, GARRETT & DUNNER LLP
eric.raciti@finnegan.com
arpita.bhattacharyya@finnegan.com