US007302708B2

(12) **United States Patent**
Kovarik, Jr.

(10) **Patent No.: US 7,302,708 B2**
(45) **Date of Patent: Nov. 27, 2007**

(54) **ENFORCING COMPUTER SECURITY UTILIZING AN ADAPTIVE LATTICE MECHANISM**

(75) Inventor: **Vincent Joseph Kovarik, Jr.**, Grant, FL (US)

(73) Assignee: **Harris Corporation**, Melbourne, FL (US)

(*) Notice: Subject to any disclaimer, the term of this patent is extended or adjusted under 35 U.S.C. 154(b) by 707 days.

(21) Appl. No.: **10/798,074**

(22) Filed: **Mar. 11, 2004**

(65) **Prior Publication Data**

US 2005/0204131 A1 Sep. 15, 2005

(51) **Int. Cl.**
G06F 7/04 (2006.01)

(52) **U.S. Cl.** **726/26**; 709/223

(58) **Field of Classification Search** 709/229, 709/219; 713/201, 166; 726/23
See application file for complete search history.

(56) **References Cited**

U.S. PATENT DOCUMENTS

5,887,065	A *	3/1999	Audebert	713/172
5,970,246	A *	10/1999	Moughani et al.	717/128
6,023,765	A	2/2000	Kuhn	
6,334,121	B1	12/2001	Primeaux et al.	
6,345,361	B1	2/2002	Jerger et al.	
6,405,202	B1	6/2002	Britton et al.	
6,408,391	B1	6/2002	Huff et al.	
6,446,077	B2	9/2002	Straube et al.	
6,446,206	B1	9/2002	Feldbaum	
6,453,418	B1	9/2002	Ooki et al.	
2002/0138322	A1	9/2002	Umezawa et al.	
2004/0044655	A1 *	3/2004	Cotner et al.	707/3
2004/0107345	A1 *	6/2004	Brandt et al.	713/171
2004/0123159	A1 *	6/2004	Kerstens et al.	713/202
2004/0193891	A1 *	9/2004	Ollila	713/182
2005/0229000	A1 *	10/2005	Shoji et al.	713/182

FOREIGN PATENT DOCUMENTS

WO	WO 03/088018	10/2003

OTHER PUBLICATIONS

Meadows, C., "Extending the Brewer-Nash Model to a Multilevel Context" IEEE, Proceedings of the Symposium on Research in Security and Privacy. Oakland, May 7-9, 1990.

Stickel, M., "Elimination of Inference Channels by Optimal Upgrading" Research in Security and Privacy, 1994, IEEE Computer Society Symposium in Oakland, CA, May 16-18, 2004, IEEE Comput. Soc, pp. 168-174.

(Continued)

Primary Examiner—Kambiz Zand
Assistant Examiner—Dant Shaifer-Harriman
(74) *Attorney, Agent, or Firm*—Darby & Darby; Robert J. Sacco

(57) **ABSTRACT**

Method and apparatus for ensuring secure access to a computer system (**1000**). The method can begin with the step of receiving in the computer system a request from an entity (using **1002**). The entity can have a predetermined access authorization level for access to a first base node (**110**) representing an information type (**102**) or a computer system function (**104**). The system determines if the access request completes a prohibited temporal access pattern for the entity. The system also compares a minimum access level established for the first base node to the predetermined access authorization level assigned to the entity. Thereafter, the system can grant the access request only if the minimum access level for the first base node does not exceed to the predetermined access authorization level.

17 Claims, 10 Drawing Sheets

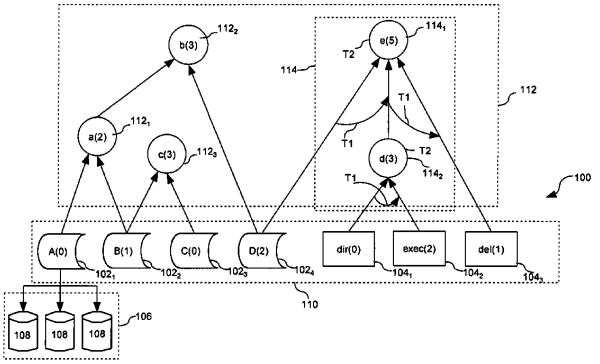

OTHER PUBLICATIONS

Denning, D., "A Lattice Model of Secure Information Flow" Communications of the ACM, vol. 19, No. 5, May 1976, pp. 236-243.

Null, L., et al., "A Unified Approach for Multilevel Database Security Based on Inference Engines" SIGCSE Bulletin, ACM, New York, NY Feb. 23, 1989, pp. 108-111.

Samarati, et al., "Access Control: Policies, Models, and Mechanisms" Lecture Notes in Computer Science, Springer Verlag, New York, NY vol. 2171, Jun. 2003, pp. 137-196.

Sandhu, R., "Lattice-Based Access Control Models" Online: URL:http//doi.ieeecomputersociety.org/10.1109/2.241422> retrieved on Oct. 25, 2005.

Brewer, D., et al., "The Chinese Wall Security Policy" Proceedings of the Symposium on Security and Privacy. Oakland, May 1-3, 1989, Washington, IEEE Comp. Soc. Press, US.

Sandhu, R., "The Typed Access Matrix Model" IEEE, Proceedings of the Computer Society Sypmsium on Research in Security and Privacy, Oakland, May 4-6, 1992, Los Alamitos, IEEE Comp. Soc. Press, US., vol. SYMP. 13, pp. 122-136.

* cited by examiner

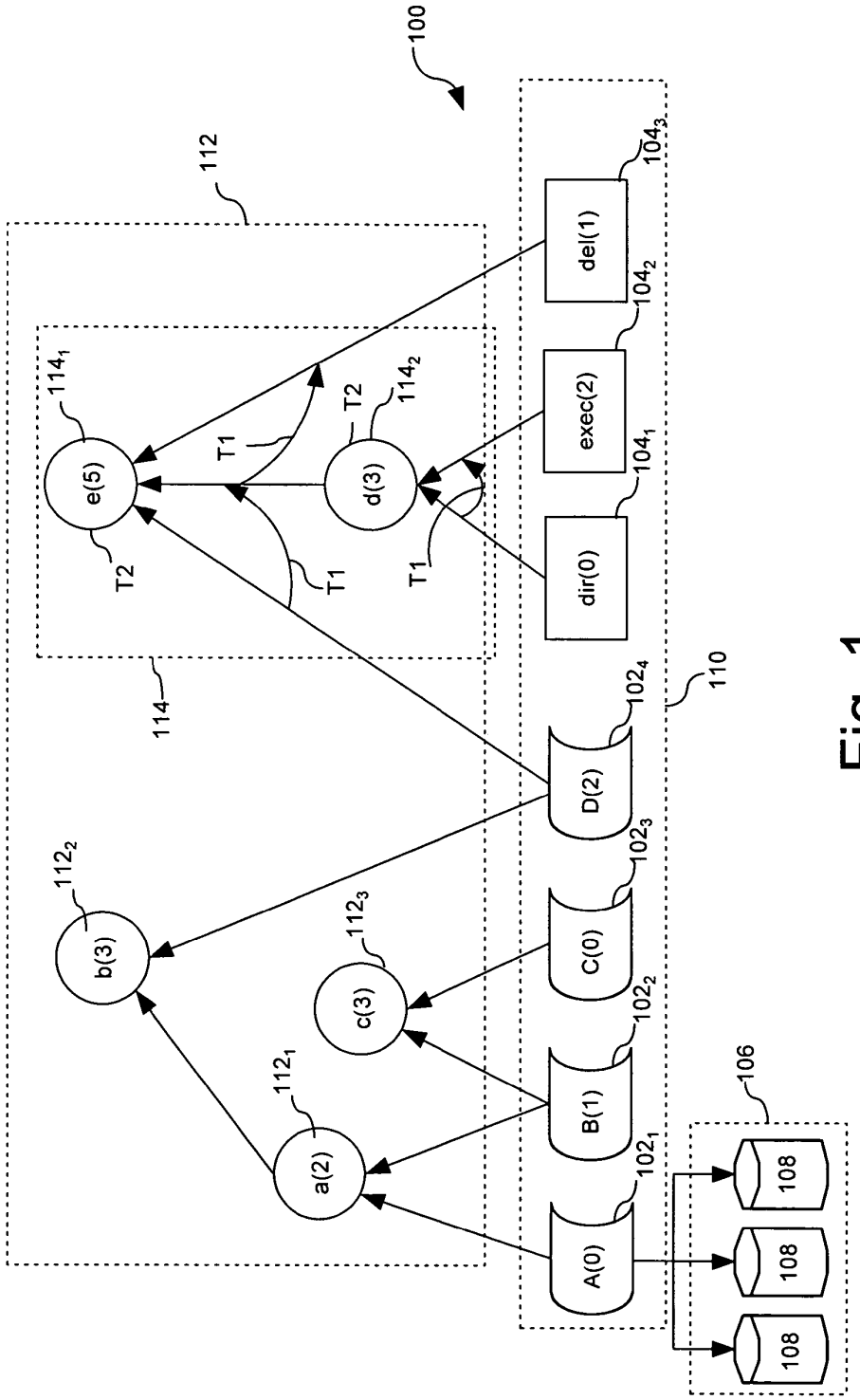
100
112
114
110
106
e(5)
d(3)
b(3)
c(3)
a(2)
T1
T2
del(1)
exec(2)
dir(0)
D(2)
C(0)
B(1)
A(0)
108
114_1
114_2
112_1
112_2
112_3
104_1
104_2
104_3
102_1
102_2
102_3
102_4

Fig. 1

Partially Ordered Set with Transitive Closure Table

POSET	A	B	C	D	dir	exec	del	a	b	c	d	e
A	1	0	0	0	0	0	0	1	1	0	0	0
B	0	1	0	0	0	0	0	1	1	1	0	0
C	0	0	1	0	0	0	0	0	0	1	0	0
D	0	0	0	1	0	0	0	0	1	0	0	1
dir	0	0	0	0	1	0	0	0	0	0	1	1
exec	0	0	0	0	0	1	0	0	0	0	1	1
del	0	0	0	0	0	0	1	0	0	0	0	1
a	0	0	0	0	0	0	0	1	1	0	0	0
b	0	0	0	0	0	0	0	0	1	0	0	0
c	0	0	0	0	0	0	0	0	0	1	0	0
d	0	0	0	0	0	0	0	0	0	0	1	1
e	0	0	0	0	0	0	0	0	0	0	0	1

202

Fig. 2A

	A	B	C	D	dir	exec	del
a	1	1	0	0	0	0	0
b	1	1	0	1	0	0	0
c	0	1	1	0	0	0	0
d	0	0	0	0	1	1	0
e	0	0	0	1	1	1	1

Fig. 2B

Temporal Order Table (TOT)

TOT	A	B	C	D	dir	exec	del
a							
b							
c							
d					1	2	
e				1	2.1	2.2	3

Fig. 3

Process/User Access Table (PUAT)

Usr	A	B	C	D	dir	exec	del
1(1)	0	1	0	2	0	2	1
2(1)	0	1	0	2	0	2	1
3(2)	0	1	0	2	0	2	1
4(1)	0	1	0	2	0	2	1
5(3)	0	1	0	2	0	2	1

Fig. 4A

Temporal Access Table (TAT)

Usr	A	B	C	D	dir	exec	del
1(1)					102	112	
2(1)							
3(2)					111	103	
4(1)							
5(3)							

Fig. 4B

Combinatorial Classification Table (CCT)

CCT	A	B	C	D	dir	exec	del
a	2	2	0	0	0	0	0
b	3	3	0	3	0	0	0
c	0	3	3	0	0	0	0
d	0	0	0	0	3	3	0
e	0	0	0	5	5	5	5

Fig. 5

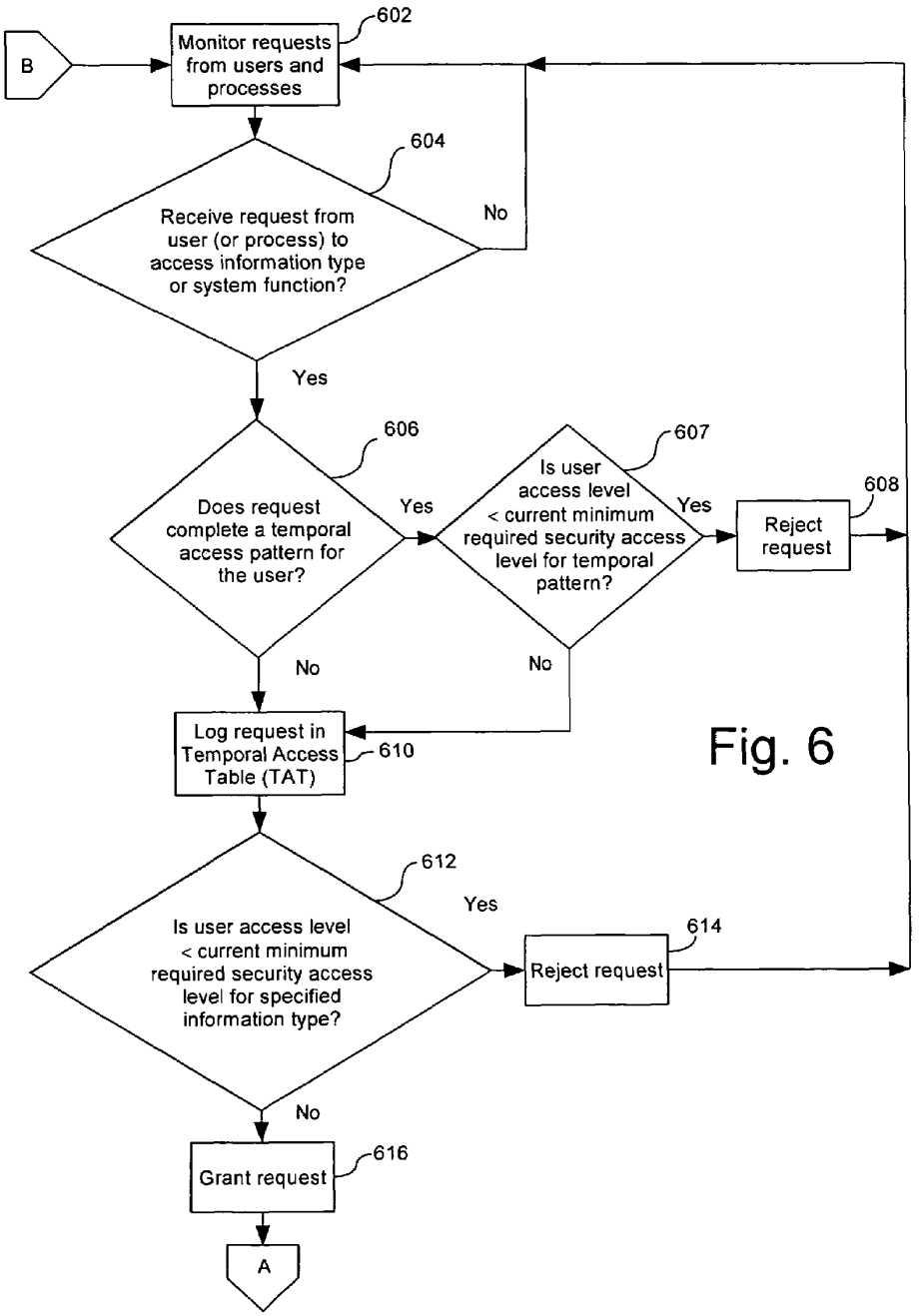
B
Monitor requests from users and processes
602
Receive request from user (or process) to access information type or system function?
604
No
Yes
Does request complete a temporal access pattern for the user?
606
Yes
Is user access level < current minimum required security access level for temporal pattern?
607
Yes
Reject request
608
No
No
Log request in Temporal Access Table (TAT)
610
Is user access level < current minimum required security access level for specified information type?
612
Yes
Reject request
614
No
Grant request
616
A

Fig. 6

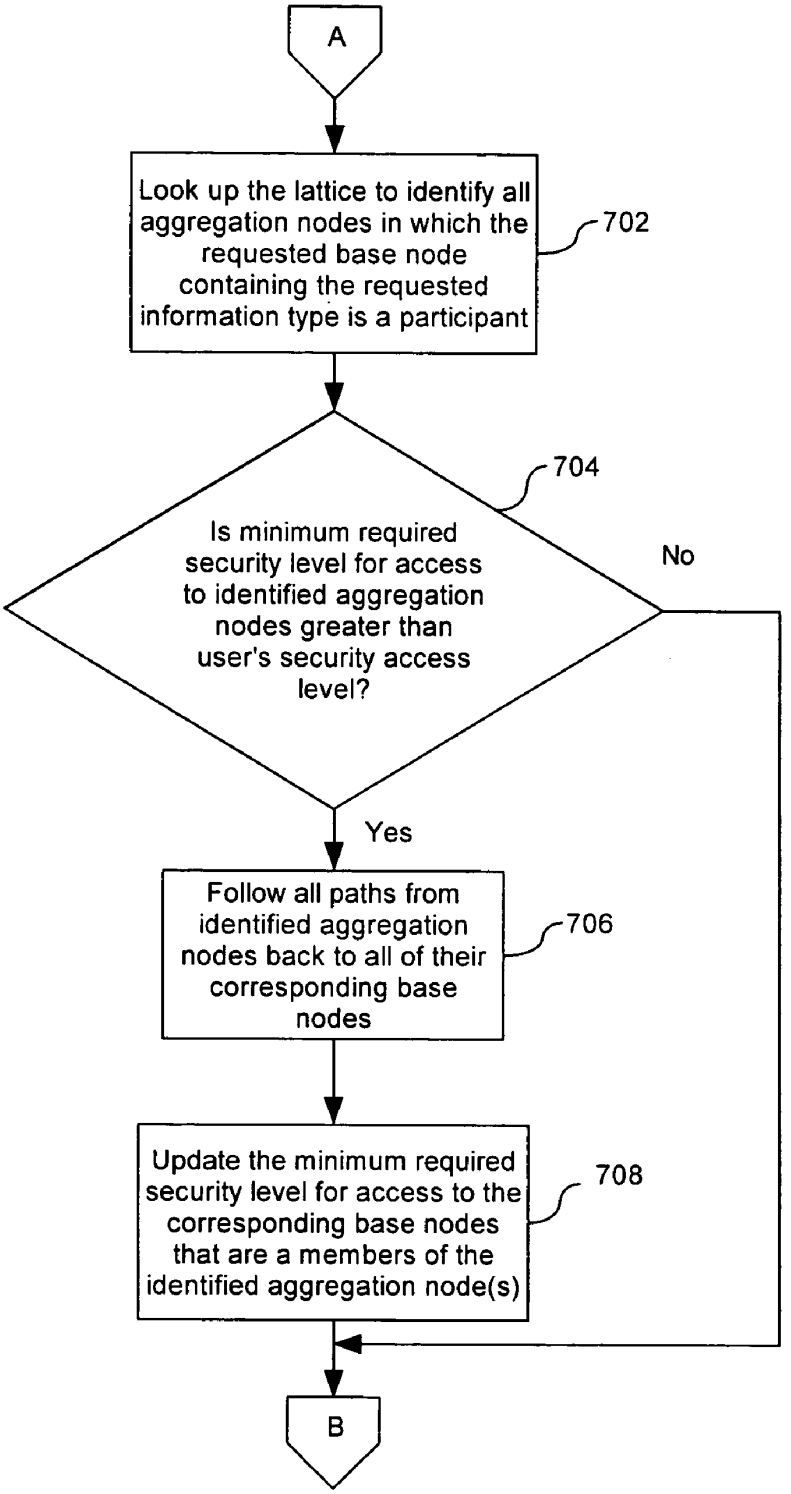
A
Look up the lattice to identify all aggregation nodes in which the requested base node containing the requested information type is a participant
702
704
Is minimum required security level for access to identified aggregation nodes greater than user's security access level?
No
Yes
Follow all paths from identified aggregation nodes back to all of their corresponding base nodes
706
Update the minimum required security level for access to the corresponding base nodes that are a members of the identified aggregation node(s)
708
B

Fig. 7

Fig. 8A

Usr	A	B	C	D	dir	exec	del
1(1)	0	1	0	2	0	2	1
2(1)	0	1	0	2	0	2	1
3(2)	0	1	0	2	0	2	1
4(1)	0	1	0	2	0	2	1
5(3)	0	1	0	2	0	2	1

Fig. 8B

TOT	A	B	C	D	dir	exec	del
a							
b							
c							
d					1	2	
e				1	2.1	2.2	3

Fig. 8C

CCT	A	B	C	D	dir	exec	del
a	2	2	0	0	0	0	0
b	3	3	0	3	0	0	0
c	0	3	3	0	0	0	0
d	0	0	0	0	3	3	0
e	0	0	0	5	5	5	5

Fig. 8D

Usr	A	B	C	D	dir	exec	del
1(1)	0	1	0	2	0	2	1
2(1)	0/1	2	0	2	0	2	1
3(2)	0	1	0	2	0	2	1
4(1)	0	1	0	2	0	2	1
5(3)	0	1	0	2	0	2	1

Fig. 8E

TOT	A	B	C	D	dir	exec	del
a							
b							
c							
d					1	2	
e				1	2.1	2.2	3

Fig. 9A

Usr	A	B	C	D	dir	exec	del
1(1)	0	1	0	2	0	2	1
2(1)	0	1	0	2	0	2	1
3(2)	0	1	0	2	0	2	1
4(1)	0	1	0	2	0	2	1
5(3)	0	1	0	2	0	2	1

Fig. 9B

TOT	A	B	C	D	dir	exec	del
a							
b							
c							
d					1	2	
e				1	2.1	2.2	3

Fig. 9C

CCT	A	B	C	D	dir	exec	del
a	2	2	0	0	0	0	0
b	3	3	0	3	0	0	0
c	0	3	3	0	0	0	0
d	0	0	0	0	3	3	0
e	0	0	0	5	5	5	5

Fig. 9D

Usr	A	B	C	D	dir	exec	del
1(1)	0	1	0	2	0	2	1
2(1)	0	1	0	2	0	2	1
3(2)	0/1	2	0	2	0	2	1
4(1)	0	1	0	2	0	2	1
5(3)	0	1	0	2	0	2	1

Fig. 9E

TOT	A	B	C	D	dir	exec	del
a							
b							
c							
d					1	2	
e				1	2.1	2.2	3

Fig. 9F

CCT	A	B	C	D	dir	exec	del
a	2	2	0	0	0	0	0
b	3	3	0	3	0	0	0
c	0	3	3	0	0	0	0
d	0	0	0	0	3	3	0
e	0	0	0	5	5	5	5

Fig. 9G

Usr	A	B	C	D	dir	exec	del
1(1)	0	1	0	2	0	2	1
2(1)	0	1	0	2	0	2	1
3(2)	0/1	3	0	2/2	0	2	1
4(1)	0	1	0	2	0	2	1
5(3)	0	1	0	2	0	2	1

Fig. 9H

TOT	A	B	C	D	dir	exec	del
a							
b							
c							
d					1	2	
e				1	2.1	2.2	3

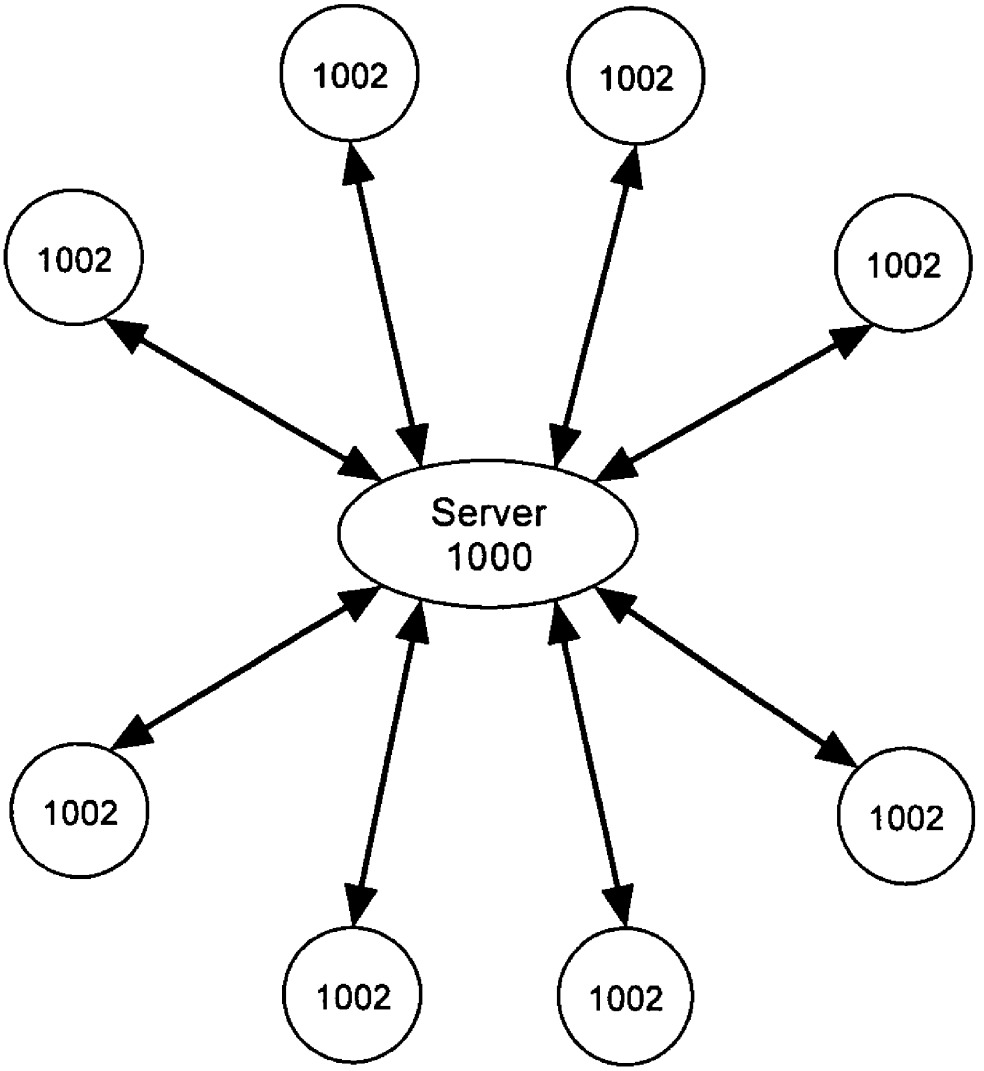

Fig. 10

ENFORCING COMPUTER SECURITY UTILIZING AN ADAPTIVE LATTICE MECHANISM

BACKGROUND OF THE INVENTION

1. Statement of the Technical Field

The inventive arrangements relate generally to computer and information security and more particularly to security measures that enforce security based on logical implementation methods.

2. Description of the Related Art

Control of access to information and computer system resources is a continuing problem for system, database, and network administrators across the government, military, and private industry. Providing system security in such multi-user environments requires a balance between permitting access to resources necessary to perform the business functions for the enterprise and limiting access. Current security methods fall within two basic categories. These include physical and logical implementation methods.

Methods for implementing logical security safeguards typically provide access based on a user/group/role identifier and an access control list for the file, database, or system function to be accessed. However, there are a number of serious limitations to such an approach, primarily because control over information access is limited to a simple relational comparison. Significantly, such systems do not enforce security based on patterns of behavior, aggregation of data, or information clustering. Further, conventional systems make use of simple point tests which do not support the ability to look at temporal patterns of access.

For example, U.S. Pat. No. 6,453,418 to Ooki et al. concerns a method for accessing information. The invention addresses some aspects of accessing portions of information based on user access authority. However, the invention makes no use of access patterns or temporal activities to control access.

U.S. Pat. No. 6,446,077 to Straube et al. concerns an inherited information propagator for objects. The invention utilizes an inheritance graph to propagate changes in security descriptors to affected objects. The invention focuses on the propagation of security tagging but does not address the process of enforcing the security policy and does not mention aggregation or temporal patterns.

U.S. Pat. No. 6,334,121 to Primeaux et al. concerns a usage pattern based user authenticator. The system utilizes a neural network and a set of rules to track usage patterns and flag suspicious activities. This patent focuses on flagging suspicious activity but does not address enforcement of a security policy based on such flagging.

SUMMARY OF THE INVENTION

The invention concerns a method for ensuring secure access to a computer system. The method can involve several steps. The method can begin with the step of receiving in the computer system a request from an entity. The entity can be a user or a process and can have a predetermined access authorization level for access to a first base node representing an information type or a computer system function. The computer system determine if the access request completes a prohibited temporal access pattern for the entity. If so, the request is rejected. Otherwise, the system can compare a minimum access level established for the first base node to the predetermined access authorization level assigned to the entity. Thereafter, the system can grant the access request only if the minimum access level for the first base node does not exceed to the predetermined access authorization level. The method can also include the step of denying the request if the minimum access level for the first base node exceeds the predetermined access authorization level assigned to the entity.

The method can also include logically organizing the computer system in the form of a tree hierarchy having a plurality of leaf nodes and higher-level nodes. A plurality of the base nodes can be defined as comprising respectively a plurality of leaf nodes of the tree hierarchy. Higher-level nodes can be defined as aggregations of the base nodes. Further, the method can include the step of identifying within the hierarchy any higher-level nodes that are aggregations comprising the first base node.

The method can also include identifying within the hierarchy any nodes that directly or indirectly comprise children of any of the higher-level nodes that are aggregations comprising the first base node. The minimum required entity access level can thereafter be updated for any base nodes that directly or indirectly comprise children of any of the higher-level nodes that are aggregations comprising the first base node.

For example the updating step can include comparing the entity's predetermined access authorization level against the minimum required access level of the higher-level nodes that are aggregations comprising the first base node. Thereafter, a minimum required access level of any the base node that is also a member of any aggregation comprising the first base node can be updated if a minimum required access level for the higher-level node comprising the aggregation has a required access level that is higher than the entity's predetermined access level.

BRIEF DESCRIPTION OF THE DRAWINGS

FIG. **1** is a representation of data primitives and hierarchical graph that is useful for understanding the invention.

FIG. **2**A is an example of a partially ordered set with transitive closure table.

FIG. **3** is an example of a temporal order table.

FIG. **4**A is an example of a process/user access table.

FIG. **5** is an example of a combinatorial classification table.

FIG. **6** is a flowchart that is useful for understanding the invention.

FIG. **7** is a flowchart that is useful for understanding the invention.

FIGS. **8**A-**8**E show a series of tables that are useful for understanding how the inventive process can operate in one example.

FIGS. **9**A-**9**H show a series of tables that are useful for understanding how the inventive process can operate in a second example.

FIG. **10** is a drawing of a computer system that is useful for understanding the implementation of the inventive arrangements.

DETAILED DESCRIPTION OF THE PREFERRED EMBODIMENTS

The invention concerns a method and system for using an adaptive lattice mechanism to enforce computer security. Data and function access security levels form an initial basis for controlling access. These security access primitives can be organized within a partially ordered set (POSET) so as to define a hierarchical, directed graph. The security access

primitives can form base nodes in the hierarchical, directed graph. Higher level nodes within the graph represent information aggregation sets and/or temporal patterns of access. Each of the nodes within the graph can have an associated security level representing the mandatory security level for the particular aggregation or pattern. Access authorities are maintained dynamically for each user/process, thereby allowing system objects to have multiple levels of access classification based on historical access by each user.

Referring now to FIG. **1**, a secure computer system can comprise a plurality of object types $\mathbf{102}_1$-$\mathbf{102}_4$ and system functions $\mathbf{104}_1$-$\mathbf{104}_3$. The object types can include one or more information types A, B, C, D. Instantiations **106** of object types can include multiple type instances **108** as illustrated. Further, each object type can have a minimum required security access level associated therewith. In FIG. **1**, the minimum required security access level for each object type $\mathbf{102}_1$-$\mathbf{102}_4$ is represented in parenthesis along with the letter identifying the information type. For example, object $\mathbf{102}_4$ in FIG. **1** is labeled as "D(2)". The number 2 in parenthesis indicates that information type D has a minimum required security access level of two. Any process or user requesting to access any instantiation of object type D must have a security access level greater than or equal to two. Similarly, access to object $\mathbf{102}_2$, which is shown as B(1), requires a security access level of one or higher.

The system functions $\mathbf{104}_1$-$\mathbf{104}_3$ represent functions which can be accessed by a process or user. In FIG. **1**, the functions are shown as including directory (dir), execute (exec), and delete (del). However, it should be understood that these are merely intended as some examples of computer system functions, and the invention is not limited to any particular type of computer system function. Similar to the notation described above with respect to object types $\mathbf{102}_1$-$\mathbf{102}_4$, each system function $\mathbf{104}_1$-$\mathbf{104}_3$ in FIG. **1** is followed by a number in parenthesis. The number represents a minimum security access level required for any process or user to access that particular function. Thus, for example, the "exec" system function labeled exec(2) requires that a process or user possess a security level of at least two in order to access that function.

The various object types $\mathbf{102}_1$-$\mathbf{102}_4$ and system functions $\mathbf{104}_1$-$\mathbf{104}_3$ can be represented in a hierarchical tree graph as shown in FIG. **1**. According to one aspect of the invention, the various object types and system functions can be defined as a plurality of leaf or base nodes **110** in the hierarchical tree **100**. Further, higher-level nodes **112** can be constructed to represent aggregations of base nodes **110**. As illustrated in FIG. **1**, higher-level nodes **112** can include aggregations of base nodes **110**, as well as higher order aggregations, i.e. aggregations of previously constructed aggregations.

According to one embodiment of the invention, the hierarchical directed graph of FIG. **1** can be implemented by organizing the object types $\mathbf{102}_1$-$\mathbf{102}_4$ and system functions $\mathbf{104}_1$-$\mathbf{104}_3$ within a partially ordered set (POSET). A POSET defines relationships that exist between pairs of elements, e.g. x→R→y within a set of elements. Within the set of elements, there exists pairs of elements, e.g. m and n, for which no relation R exists. Thus, the set is partially ordered. Consequently, POSETs may have multiple root and leaf nodes in contrast to a tree structure which has a single root node and multiple leaf nodes. Because of the multiplicity of root nodes representing information access and operational functions for which the security operations are to be enforced, the POSET is used to represent the multiplicity of security relationships. FIG. **2**A is an example of such a POSET **200** with a transitive closure table **202** that can be produced for the hierarchical tree **100** in FIG. **1**.

Referring again to FIG. **1**, it can be seen that relationships can be asserted for temporal access patterns. In this figure the curved arrows labeled T**1** denote a temporal ordering between the accesses defined by items $\mathbf{114}_1$ and $\mathbf{114}_2$. Thus, for item $\mathbf{114}_2$, a temporal order is asserted between items **104**, and $\mathbf{104}_2$, e.g. $\mathbf{104}_1 \rightarrow \mathbf{104}_2$. Thus, node d(3) not only identifies an aggregation of the primitive functions denoted by $\mathbf{104}_1$ and $\mathbf{104}_2$ but also specifies that an explicit temporal ordering exists in that 104_1 is accessed before $\mathbf{104}_2$. So, for the security policy associated with item $\mathbf{114}_2$ to be activated, not only must both $\mathbf{104}_1$ and $\mathbf{104}_2$ be accessed but they must be accessed in the order indicated by the temporal relationship. In addition to specifying a temporal order of access activities for a single node, temporal relations may be subsumed within other nodes through aggregation. This is illustrated by item $\mathbf{114}_1$ in FIG. **1**. Item $\mathbf{114}_1$ has three access items associated with the node, item $\mathbf{102}_4$, $\mathbf{114}_2$, and $\mathbf{104}_3$. As shown on the diagram, a temporal ordering has been identified that specifies $\mathbf{102}_4 \rightarrow \mathbf{114}_2 \rightarrow \mathbf{104}_3$. However, item $\mathbf{114}_2$ is an aggregation of access operations. Thus the operations identified by item $\mathbf{114}_2$ become subsumed into the overall temporal ordering of item $\mathbf{114}_1$ and the full temporal order is $\mathbf{102}_4 \rightarrow \mathbf{104}_1 \rightarrow \mathbf{104}_2 \rightarrow \mathbf{104}_3$, where item $\mathbf{114}_2$ in the original temporal order has been replaced by its constituent parts, $\mathbf{104}_1 \rightarrow \mathbf{104}_2$.

FIG. **3** is the Temporal Order Table (TOT) that captures the above relationships. The TOT is useful for capturing the relative temporal order of actions and allows relative or approximate temporal pattern matching to identify hostile actions. So, for access to node d, item $\mathbf{114}_2$, the table shows that first the dir operation, item $\mathbf{104}_1$, is performed, followed by the exec operation, item $\mathbf{104}_2$. This ordering is shown in the row labeled "d" with a numerical ordering of the accesses listed in the columns. FIG. **3** further shows that for node e, item $\mathbf{114}_1$, the initial access is a data class D, item $\mathbf{102}_4$, followed by the constituent elements of node d, item $\mathbf{114}_2$, which is the dir, item $\mathbf{104}_1$, and exec, item $\mathbf{104}_2$, operations. In this case the row labeled "e" stores the order of the accesses using numerical values. In the case of row "e", the inclusion of the access ordering associated with node d, item $\mathbf{114}_2$ is shown as 2.1 and 2.2 representing the fact that both accesses are grouped as the second item in the temporal ordering for node e, item $\mathbf{114}_1$, and that the order for these grouped items is denoted by the second number after the 2.

Referring now to FIG. **4**A, there is shown an example of a Process/User Access Table (PUAT) that can be used in the present invention. The PUAT is a table of access authority that shows the minimum security level that each particular process or user is required to have in order to access the object type **102** or system function **104** in FIG. **1**. For example, FIG. **3** shows that users **1-5** can be required (at least initially) to possess a security access level of at least one (1) to access information type B. Since users **1-5** in FIG. **4**A all have a security access level of at least one (1), this means that all users can, at least initially, access information type B.

Significantly, however, the PUAT is a dynamic table in which the minimum security level required for a particular process or user to access a particular object type **102** or system function **104** can be changed depending on access history and/or identified temporal patterns. In this way, access authorities are maintained dynamically for each user

allowing system objects to have multiple levels of access classification based on historical access by a particular process or user.

The transitive closure table of the complete set of access operations and aggregate nodes is illustrated in FIG. **2**A. The transitive closure table is obtained by adding a row and column for each of the aggregate nodes to the table of primitive actions. This yields an n-by-n table where the number of columns and rows are equal and the number of rows and columns is equal to the sum of the number primitive operations and number of aggregation nodes. A subset, item **202**, of the transitive closure table of the POSET of FIG. **2**A is then used to produce a combinatorial classification table (CCT) which is illustrated in FIG. **5**. The CCT is obtained by taking the subset of the transitive closure table, item **202**, corresponding to the set of aggregations shown in the columns and the primitive operations shown in the rows. This subset identifies the dependencies between the primitive access operations and the aggregations to which they are associated. This subset of the transitive closure, item **202**, is then flipped about its diagonal axis yielding the aggregation items, a through e as the rows and the primitive access operations as the columns, as shown in FIG. **2**B. Finally, each row is inspected and for each column containing a 1 entry, the number 1 is replaced with the security access level associated with the aggregation. This yields the final CCT as illustrated in FIG. **5**.

A flowchart that is useful for understanding the invention is shown in FIGS. **6** and **7**. As illustrated therein, the process can begin in step **602** of FIG. **6** by monitoring requests from computer system users and/or processes. Messages are tested in step **604** to determine if they comprise requests to access an information type or system function. If so, then the system continues on to step **606** to determine if the request completes a temporal access pattern for the particular user. If the request does complete a temporal access pattern, this means that the sequence of operations performed matches an identified pattern and is subject to the security access level specified for the that temporal order. If a temporal pattern is completed, the user's access level is compared to the access level required for the requested access action, illustrated in step **607**. Note that the temporal ordering of primitive access operations mandates that the operations occur in the order specified for the security policy to be enforced. Thus, in FIG. **1**, if $\mathbf{104}_2$ is accessed first followed by item $\mathbf{104}_1$, the security policy associated with node d, item $\mathbf{114}_2$, will not be activated because the temporal order was not satisfied. If the access level of the user is not sufficient for the requested action, then the request is rejected in step **608**.

If the request does not complete a temporal access pattern for the particular user or the user's access level is sufficient for the temporal pattern completed, then the system continues on to step **610** and logs the request in the Temporal Access Table (TAT). As shown in FIG. **4**B, the Temporal Access Table maintains a history of the primitive operations performed by a user. As a user is granted authorization to perform a primitive access operation, the operation is time-stamped and stored within the TAT. The time stamps are compared against the temporal patterns identified in the Temporal Order Table, FIG. **3**, to check for matches. Thus, in FIG. **4**B user **1** performed a dir operation at time **102** and then requested an exec operation at time **112**. Since **112** is after **102**, this request would trigger a match in the Temporal Order Table for node d, item $\mathbf{114}_2$ in FIG. **1**, and the request would be denied. However, in the case of user **3**, the exec operation was performed at time **103** followed by the dir operation at time **111**. This pair does not match the defined temporal order and the operations are permitted.

In step **612**, the computer system makes a determination as to whether the security access level of the user making the request is less than the current minimum required security access level for the specified information type. This determination can be completed by reference to the table in FIG. **4**A. If the user does not have authorization for at least the current minimum required security access level, then the request is rejected. Alternatively, if the user does have a sufficiently high security access level then the request is granted in step **616**.

Aggregation nodes **112** are comprised of two or more nodes which may be base nodes **110**, other aggregation nodes **112**, or a combination of both base and aggregation nodes. Accordingly, such aggregation nodes will often have a higher minimum required security level for permitting access as compared to security levels required for access to participant information types and/or system functions that comprise base nodes **110**. This is true because aggregated data is often of a more sensitive nature since it provides greater context and can identify relationships between the various individual information types. Consequently aggregated information will inevitably be of greater interest to unauthorized users and system administrators will naturally wish to impose higher level restrictions on its access.

Still, it will be appreciated that access to all of the information types or system functions associated with base nodes **110** that are participants in a particular aggregation node is, in many instances, tantamount to directly accessing the aggregation node. Accordingly, it can be desirable to increase a security authorization level necessary for a particular user or process to access certain information types once the user or process has accessed certain other information types. For example, this may be true in those instances where both of the data types are participants in a common aggregation node. In such instances, it can be desirable to increase the required security authorization level for a particular user to access a base node to be at least equal to the security authorization level of an aggregation node to which the base node is a participant.

Accordingly, the process can continue in step **702** of FIG. **7** by identifying all higher-level aggregation nodes **112** in which the base node containing the requested information type is a participant. In step **704** the computer system can determine if the minimum required security level for access to identified aggregation nodes is greater than the particular user's authorized security access level. If so, then in step **706** the computer system can identify all base nodes that are also participants in that particular aggregation node. This can be accomplished, for example, by following all paths from the identified aggregation nodes back to all of their corresponding base nodes.

Once so identified, the minimum required security level for accessing base nodes of the information type that has been already accessed remains the same. However, the minimum required security level for the user to access the other participant base nodes (i.e., other than the originally requested base node) can be updated in step **708**. For example, the required minimum security level to access a participant base node can be increased for a particular user to match the minimum required security level for accessing an aggregation node in which the participant base node is a participant.

The invention can be better understood by considering the following examples which are illustrative of the process.

EXAMPLE 1

Referring to FIGS. **1** and **8**, consider the case in which access authorization for users **1-5** is established in accordance with PUAT in FIG. **8**A. User **2** with access level 1, U**2**(1) can request access to an object $\mathbf{102}_1$ of information type A as previously described in relation to step **604**. In accordance with step **606**, the system consults the TOT (Temporal Order Table) in FIG. **8**B and determined that the access request time does not complete a temporal access pattern. Subsequently, the request is logged in the (Temporal Access Table) as provided in step **610**. In accordance with step **612** the request is tested to determine if user **2** has a sufficiently high level of access authorization. In this case U**2**(1)≧A(0) and therefore access is granted to the requested information type A in accordance with step **616**.

Thereafter, in step **702** the computer system can identify aggregations with object A using the CCT (Combinatorial Classification Table) in FIG. **8**C. In step **704**, the system checks to determine if the minimum required security level for accessing the aggregation node $\mathbf{112}_1$ of type "a" is greater than the user's authorized security access level. In this case, the condition is satisfied since the user's authorized security access level is 1 and the minimum required level to access aggregation node $\mathbf{112}_1$ of type "a" is equal to 2. Accordingly, the system continues to step **706** and identifies any other base nodes **110** that are part of the aggregation node $\mathbf{112}_1$ of type "a". In this case, the system identifies information type B as being a participant in the aggregation of type "a".

Thereafter, in step **708** the PUAT in FIG. **8**A is updated such that (1) the minimum security level required for accessing the originally requested base node **110** of information type "A" remains unchanged; and (2) the other participant of the aggregation node $\mathbf{112}_1$ are updated so that their minimum required security level is increased to equal to the minimum required security level established for the aggregation node "a". This can be expressed as follows: If PUAT(i)<CCT(i) then CCT(i)→PUAT(i). The result is an updated PUAT table as shown in FIG. **8**D.

The updated table in FIG. **8**D shows that for the base node **110** of information type A the minimum security access level continues to be zero. The notation 0/1 for information type A in FIG. **8**D indicates that the object has a zero security level and is the first one accessed by User **2**. However, with regard to User **2**, the minimum security level for accessing an object of information type B in the PUAT of FIG. **8**D has been increased to level 2.

Subsequently, if User **2** with access level 1, U**2**(1) requests access to an object $\mathbf{102}_2$ of information type B the system will determine in step **606** that the access request time does not complete a temporal access pattern. This is accomplished by comparing the access time to the TOT in FIG. **8**E. The TOT is unchanged from its earlier state in FIG. **8**B and therefore the request does not get rejected in step **606**. However, in step **612**, a check of the updated PUAT of FIG. **8**D reveals that the minimum security level required for user **2** to access information of type B is now set to level 2. Accordingly, the request is rejected in step **614**. This can be expressed as U**2**(1)-≧A(2) therefore deny access.

EXAMPLE 2

Referring to FIGS. **1** and **9**, consider the case in which access authorization for users **1-5** is established in accordance with PUAT in FIG. **9**A. User **3** with access level 2, U**3**(2) can request access to an object **102**, of information type A as previously described in relation to step **604**. In accordance with step **606**, the system consults the TOT (Temporal Order Table) in FIG. **9**B and determined that the access request time does not complete a temporal access pattern. Subsequently, the request is logged as provided in step **610**. In accordance with step **612** the request is tested to determine if User **3** has a sufficiently high level of access authorization. In this case U**3**(2)≧A(0) and therefore access is granted to the requested object **102**, in accordance with step **616**.

Thereafter, in step **702** the computer system can identify aggregations with object A using the CCT (Combinatorial Classification Table) in FIG. **9**C. In step **704**, the system checks to determine if the minimum required security level for accessing the aggregation node $\mathbf{112}_1$ of type "a" is greater than the authorized security access level of user **3**. In this case, the condition is not satisfied since the user's authorized security access level is 2 and the minimum required level to access aggregation node $\mathbf{112}_1$ (i.e., type "a") is equal to 2. Accordingly, the system concludes that the user has an adequate security access level and continues to step **706** where it identifies any other base nodes **110** that are part of the aggregation node $\mathbf{112}_1$. In this case, the system identifies $\mathbf{102}_2$ (information type B) as being a participant in the aggregation.

Thereafter, in step **708** the PUAT in FIG. **9**A is updated such that (1) the minimum security level required for accessing the originally requested base node **110** (information type "A") remains unchanged; and (2) the other participant of the aggregation node $\mathbf{112}_1$ of type "a" are updated so that their minimum required security level is increased to equal to the minimum required security level established for the aggregation node **1121** of type "a". This can be expressed as follows: If PUAT(i)<CCT(i) then CCT(i)→PUAT(i). The result is an updated PUAT table as shown in FIG. **9**D.

The updated table in FIG. **9**D shows that for the base node **102**, of information type A the minimum security access level continues to be zero for User **3**. The notation 0/1 for information type A in FIG. **9**D indicates that the object has a zero security level and was the first information type accessed by User **3**. However, the minimum security level for accessing an object $\mathbf{102}_2$ of information type B in the PUAT of FIG. **9**D has been increased to level 2.

Subsequently, if User **3** with access level 2, U**3**(2) requests access to an object $\mathbf{102}_4$ of information type D, the computer system will determine in step **606** that the access request time does not complete a temporal access pattern. This is accomplished by comparing the access time to the TOT in FIG. **9**E. The TOT is unchanged from its earlier state in FIG. **9**B and therefore the request does not get rejected in step **606**. In step **612**, a check of the updated PUAT of FIG. **9**D reveals that the minimum security level required for user **3** to access information of type D is set (as it was initially) at level 2. Accordingly, the request is granted in step **616**. This can be expressed as U**3**(2)≧D(2) therefore grant access.

Thereafter, in step **702** the computer system can identify aggregations with the object of information type D using the CCT (Combinatorial Classification Table) in FIG. **9**F. In this case node $\mathbf{102}_4$ (information type D) is a participant in aggregation node $\mathbf{112}_2$ of type "b". In step **704**, the system checks to determine if the minimum required security level for accessing the aggregation node $\mathbf{112}_2$ is greater than the user's authorized security access level. In this case, the condition is satisfied since the user's authorized security access level is 2 and the minimum required level to access aggregation node $\mathbf{112}_2$ of type "b" is equal to 3. Accordingly, the system continues to step **706** and identifies any other

base nodes **110** that are part of the aggregation node $\mathbf{112}_2$ of type "b". In this case, the system identifies information types A and B (nodes $\mathbf{102}_1$ and $\mathbf{102}_2$) as being a participant in the aggregation of node $\mathbf{112}_2$ of type "b".

Thereafter, in step **708** the PUAT in FIG. **9**D is updated such that (1) the minimum security level required for accessing the originally requested base node $\mathbf{102}_4$ of information type "D" remains unchanged; and (2) the other participant of the aggregation node $\mathbf{112}_2$ of type "b" are updated so that their minimum required security level is increased to be equal to the minimum required security level established for the aggregation node $\mathbf{112}_2$ of information type "b". This can be expressed as follows: If PUAT(i)<CCT (i) then CCT(i)→PUAT(i). The result is an updated PUAT table as shown in FIG. **9**G.

The updated table in FIG. **9**G shows that for the base node $\mathbf{102}_4$ of information type D the minimum security access level continues to be two. The notation 2/2 for information type D in FIG. **9**G indicates that the object $\mathbf{102}_4$ has a security level of 2 and is the second one accessed by User **3**. However, with regard to User **3**, the minimum security level for accessing an object of information type B in the PUAT of FIG. **9**G has been increased to level 3.

Continuing with the foregoing example, User **3** with access level 2, U**3**(2) can request access to an object $\mathbf{102}_2$ of information type B. As illustrated in FIG. **9**H, the access request time does not complete a temporal access pattern (step **606**). However, in step **612** a comparison is made of the security authorization level for User **3** to the minimum security level required for User **3** to access as specified by the PUAT in FIG. **9**G. This test reveals that User **3** (security authorization level 2) does not have a sufficiently high security level to access information type B which now has a minimum required security of 3, at least with respect to requests by user **3**. This can be expressed as U**3**(2)-≧B(3). Accordingly, the request for access is rejected in step **614**.

The inventive arrangements described herein can be used in conjunction with a wide variety of computer systems. These can include stand-alone computer systems, computer networks or client-server arrangements as shown in FIG. **10**. The invention can be integrated within computer application software or implemented as an external component to existing software systems to provide modular accessibility. Further, the invention is not restricted to use with any particular type of software application or access request from any particular type of entity. Accordingly, to the extent that the invention has been described herein in terms of requests from users or processes, it will be understood by those skilled in the art that the techniques described herein can have much broader application. For example, the invention can be used to provide security for database access, to operating system calls, and/or to identifying hostile patterns of remote access which may be initiated by computer viruses and worms.

Referring again to FIG. **10**, it will be appreciated that the present invention can be realized in software in a centralized fashion in one computer system **1000**, or in a distributed fashion where different elements are spread across several interconnected computer systems **1000**, **1002**. Any kind of computer system or other apparatus adapted for carrying out the methods described herein is suited. A typical implementation can include a general purpose computer system with a computer program that, when being loaded and executed, controls the computer system such that it carries out the methods described herein.

The present invention also can be embedded in a computer program product, which comprises all the features enabling the implementation of the methods described herein, and which when loaded in a computer system is able to carry out these methods. Computer program in the present context means any expression, in any language, code or notation, of a set of instructions intended to cause a system having an information processing capability to perform a particular function either directly or after either or both of the following: a) conversion to another language, code or notation; b) reproduction in a different material form.

This invention can be embodied in other forms without departing from the spirit or essential attributes thereof. Accordingly, reference should be made to the following claims, rather than to the foregoing specification, as indicating the scope of the invention.

I claim:

1. A method for secure access to a computer system, comprising the steps of:

receiving in said computer system a request from an entity with a predetermined access level for access to a first base node representing at least one of an information type and a computer system function;

determining if said access request completes a prohibited temporal access pattern for said entity;

comparing a minimum access level established for said first base node to said predetermined access level;

granting said access request only if it does not complete a prohibited temporal access pattern for said entity, and said minimum access level for said first base node does not exceed said predetermined access level; and

denying said request if said access request completes a prohibited temporal access pattern for said entity.

2. The method according to claim **1**, further comprising the step of denying said request if said minimum access level for said first base node exceeds said predetermined access level for said entity.

3. The method according to claim **1**, further comprising the steps of:

logically organizing said computer system in the form of a tree hierarchy having a plurality of leaf nodes and higher-level nodes;

defining a plurality of said base nodes as comprising respectively a plurality of leaf nodes of said tree hierarchy; and

defining said higher-level nodes as aggregations of said base nodes.

4. The method according to claim **3** further comprising the step of identifying within said hierarchy any higher-level nodes that are aggregations comprising said first base node.

5. The method according to claim **4**, further comprising the step of identifying within said hierarchy any nodes that comprise children of any generation of said higher-level nodes that are aggregations comprising said first base node.

6. The method according to claim **5**, further comprising the step of updating a minimum required entity access level for any base nodes that comprise children of any generation of said higher-level nodes that are aggregations comprising said first base node.

7. The method according to claim **6**, wherein said updating step further comprises the steps of:

comparing said entity's predetermined access level against the minimum required access level of said higher-level nodes that are aggregations comprising said first base node; and

updating a minimum required access level of any said base node that is also a member of any aggregation comprising said first base node if a minimum required access level for said higher-level node comprising said

aggregation has a required access level that is higher than said entity's predetermined access level.

8. The method according to claim **1**, further comprising the steps of:

comparing said entity's predetermined access level against the minimum required access level of at least one higher-level node that is an aggregation of base nodes including said first base node; and

updating a minimum required access level of any said base node that is also a member of any aggregation comprising said first base node if a minimum required access level for said higher-level node comprising said aggregation has a required access level that is higher than said entity's predetermined access level.

9. A method for restricting access to a computer system having a plurality of logical base nodes representing at least one of an information type and a computer system function, and a plurality of higher-level nodes arranged together with said base nodes in the form of a tree hierarchy, comprising the steps of:

receiving in said computer system a request from an entity with a predetermined access level for access to a first base node;

determining if said access request completes a prohibited temporal access pattern for said entity;

comparing a minimum access level established for said first base node to said predetermined access level;

granting said access request only if it does not complete a prohibited temporal access pattern for said entity, and said minimum access level for said first base node does not exceed said predetermined access level; and

denying said request if said access request completes a prohibited temporal access pattern for said entity.

10. A secure computer system comprising:

a plurality of logical base nodes representing at least one of an information type and a computer system function;

a plurality of higher-level nodes arranged together with said base nodes in the form of a tree hierarchy;

a computer system interface capable of receiving a request from an entity with a predetermined access level for access to a first base node;

a temporal access table;

processing means programmed for comparing said access request to said temporal access table to determine if said access request completes a prohibited temporal access pattern for said entity, and for comparing a minimum access level established for said first base node to said predetermined access level; and

wherein said processing means denies said request if said access request completes a prohibited temporal access pattern for said entity and grants said access request only if it does not complete a prohibited temporal access pattern for said entity, and said minimum access level for said first base node does not exceed said predetermined access level.

11. The secure computer system according to claim **10**, wherein said processing means denies said request if said minimum access level for said first base node exceeds said predetermined access level for said entity.

12. The secure computer system according to claim **10** wherein said higher-level nodes are aggregations of said base nodes.

13. The secure computer system according to claim **12** wherein said processing means identifies within said hierarchy any higher-level nodes that are aggregations comprising said first base node.

14. The secure computer system according to claim **13** wherein said computer processing means identifies within said hierarchy any nodes that comprise children of any generation of said higher-level nodes that are aggregations comprising said first base node.

15. The secure computer system according to claim **14** wherein said processing means updates a minimum required entity access level for any base nodes that comprise children of any generation of said higher-level nodes that are aggregations comprising said first base node.

16. The secure computer system according to claim **15** wherein said processing means compares said entity's predetermined access level against the minimum required access level of said higher-level nodes that are aggregations comprising said first base node; and

automatically updates a minimum required access level of any said base node that is also a member of any aggregation comprising said first base node if a minimum required access level for said higher-level node comprising said aggregation has a required access level that is higher than said entity's predetermined access level.

17. The secure computer system according to claim **10** wherein said processing means compares said entity's predetermined access level against the minimum required access level of at least one higher-level node that is an aggregation of base nodes including said first base node; and

updates a minimum required access level of any said base node that is also a member of any aggregation comprising said first base node if a minimum required access level for said higher-level node comprising said aggregation has a required access level that is higher than said entity's predetermined access level.

* * * * *