US 20030145225A1

(19) United States

(12) Patent Application Publication

(10) Pub. No.: US 2003/0145225 A1

(43) Pub. Date: Jul. 31, 2003

Bruton, III et al.

(54) INTRUSION EVENT FILTERING AND GENERIC ATTACK SIGNATURES

(75) Inventors: **David Aro Bruton III**, Raleigh, NC (US); **Patricia Jakubik**, Raleigh, NC (US); **Patrick Michael LiVecchi**, Raleigh, NC (US); **Linwood Hugh Overby JR.**, Raleigh, NC (US)

Correspondence Address:
Jerry W. Henrndon
IBM Corporation T81/503
PO Box 12195
Research Triangle Park, NC 27709 (US)

(73) Assignee: **International Business Machines Corporation**, Armonk, NY (US)

(21) Appl. No.: **10/058,689**

(22) Filed: **Jan. 28, 2002**

Publication Classification

(51) **Int. Cl.**[7] **H04L 9/00**

(52) **U.S. Cl.** **713/201**

(57) **ABSTRACT**

Improvements in intrusion detection are disclosed by providing intrusion event filtering and/or generic attack signature processing. These services may be integrated into a system or server that is the potential target of attack, or alternatively may be implemented in a network device. Filtering may be provided using sensitivity levels and suspicion levels. Generic attack signatures describe relatively broad classes of intrusions. Intrusion detection policy information may be used to direct the actions to be taken upon detecting an attack.

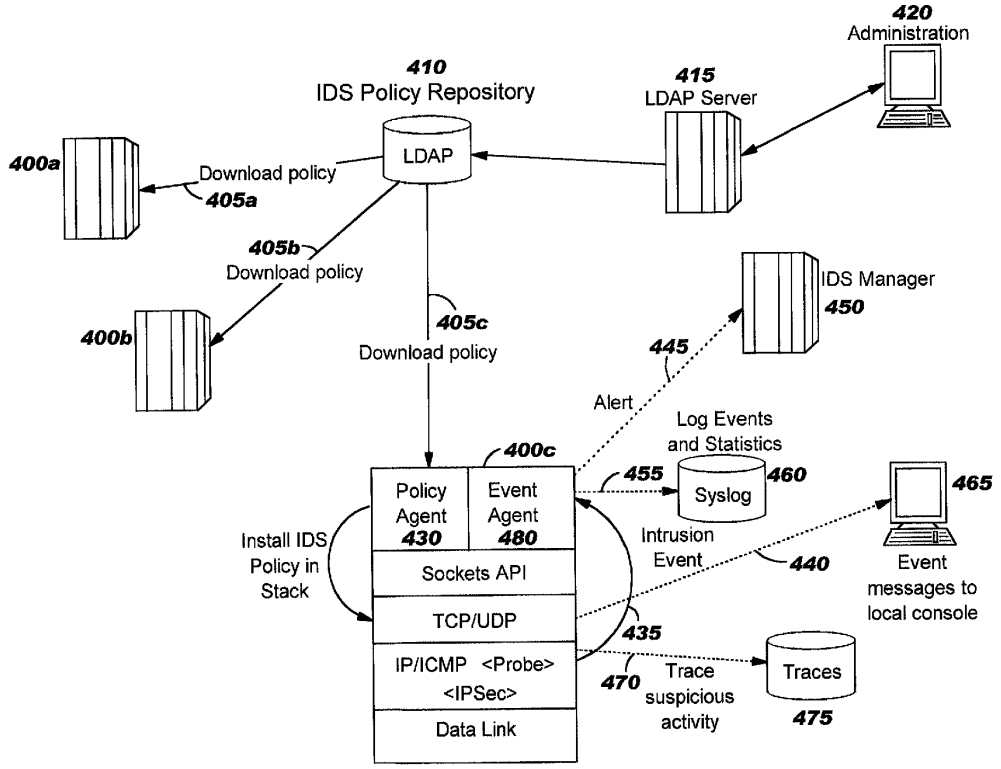

FIG. 1
(Prior Art)

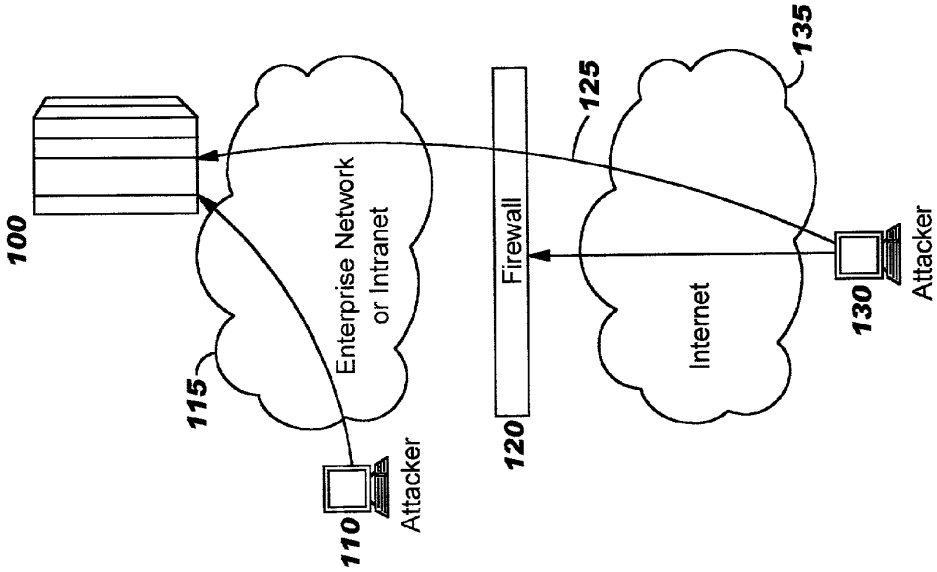

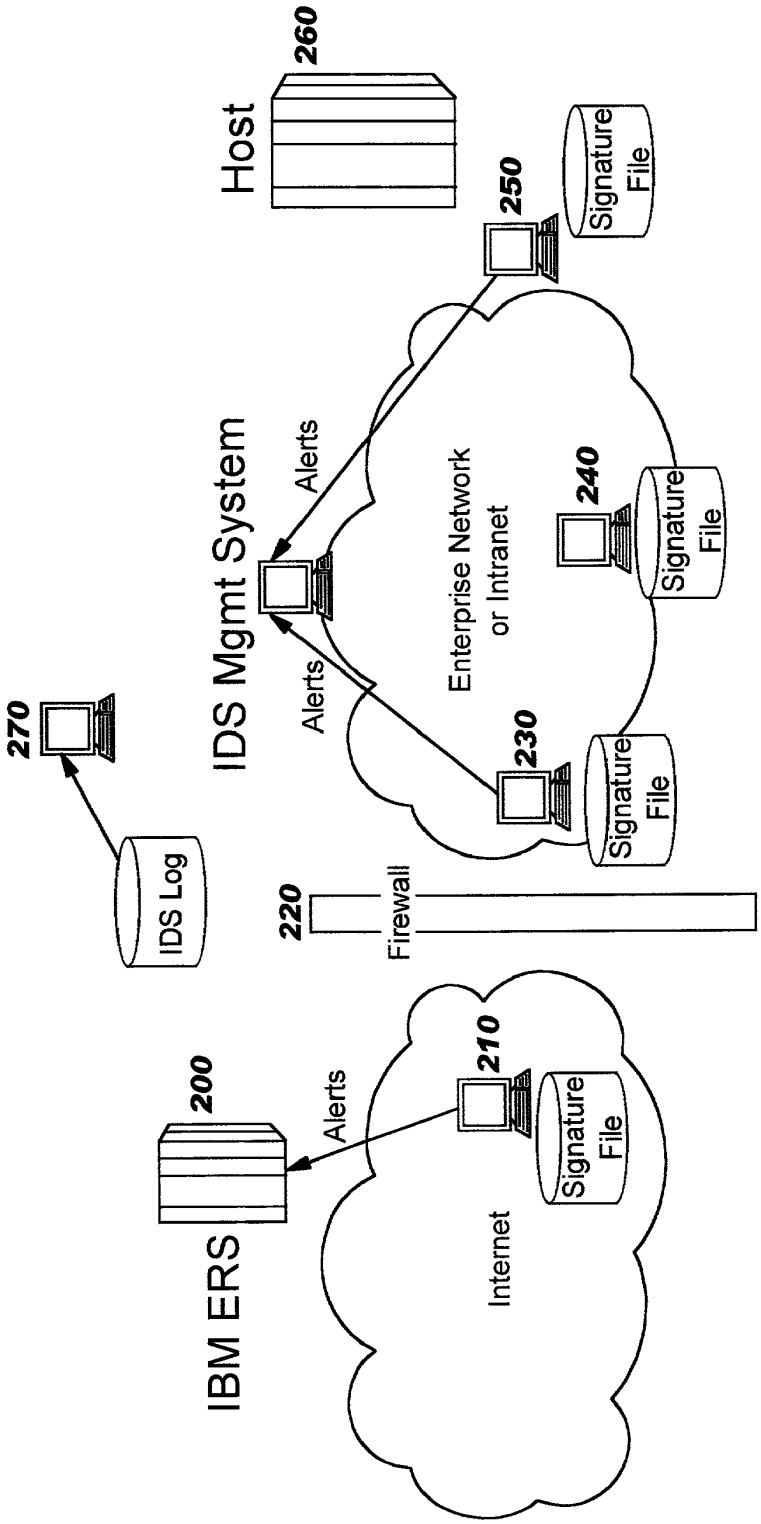

FIG. 2
(Prior Art)

FIG. 3

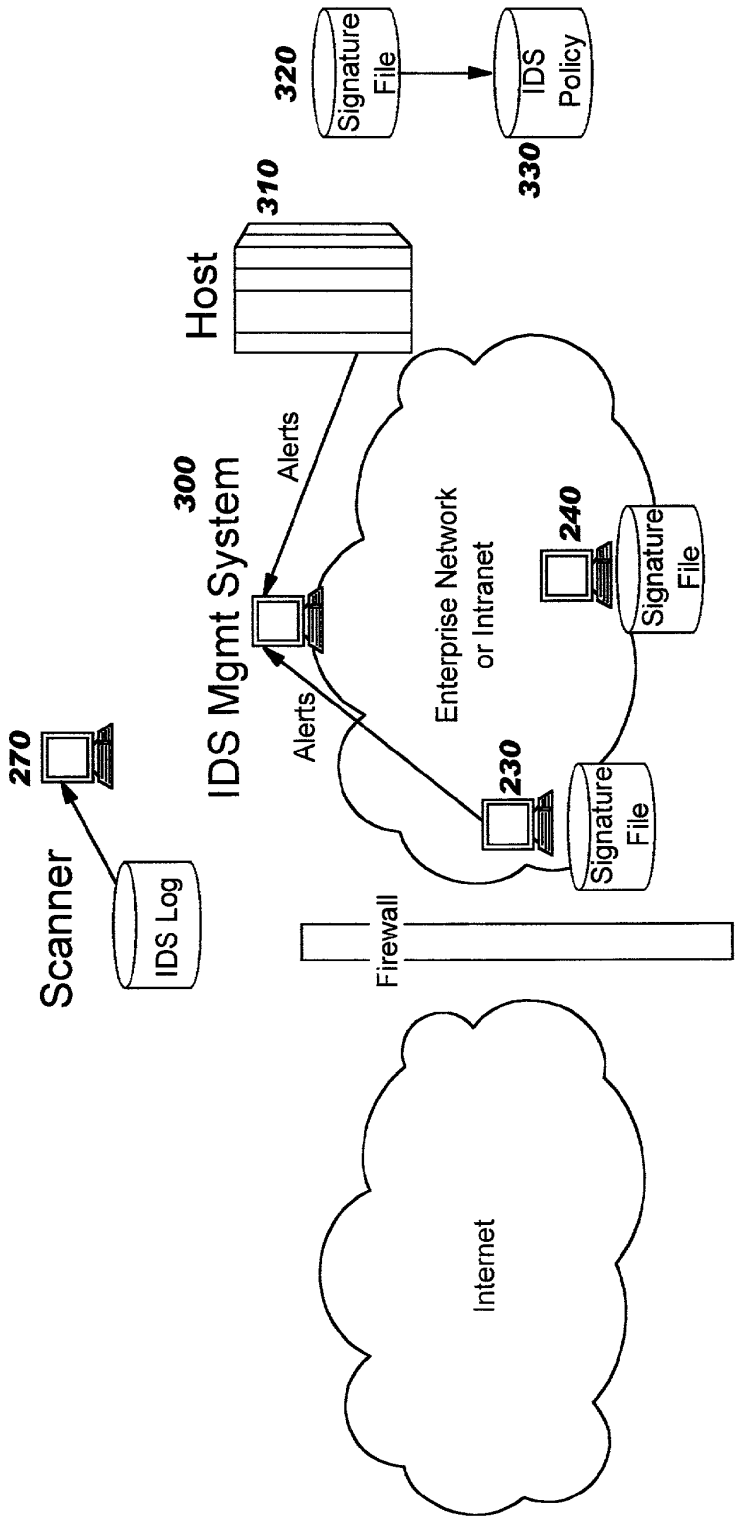
320
Signature File
IDS Policy
330
310
Host
Alerts
300
IDS Mgmt System
Alerts
Enterprise Network or Intranet
240
Signature File
270
Scanner
IDS Log
230
Signature File
Firewall
Internet

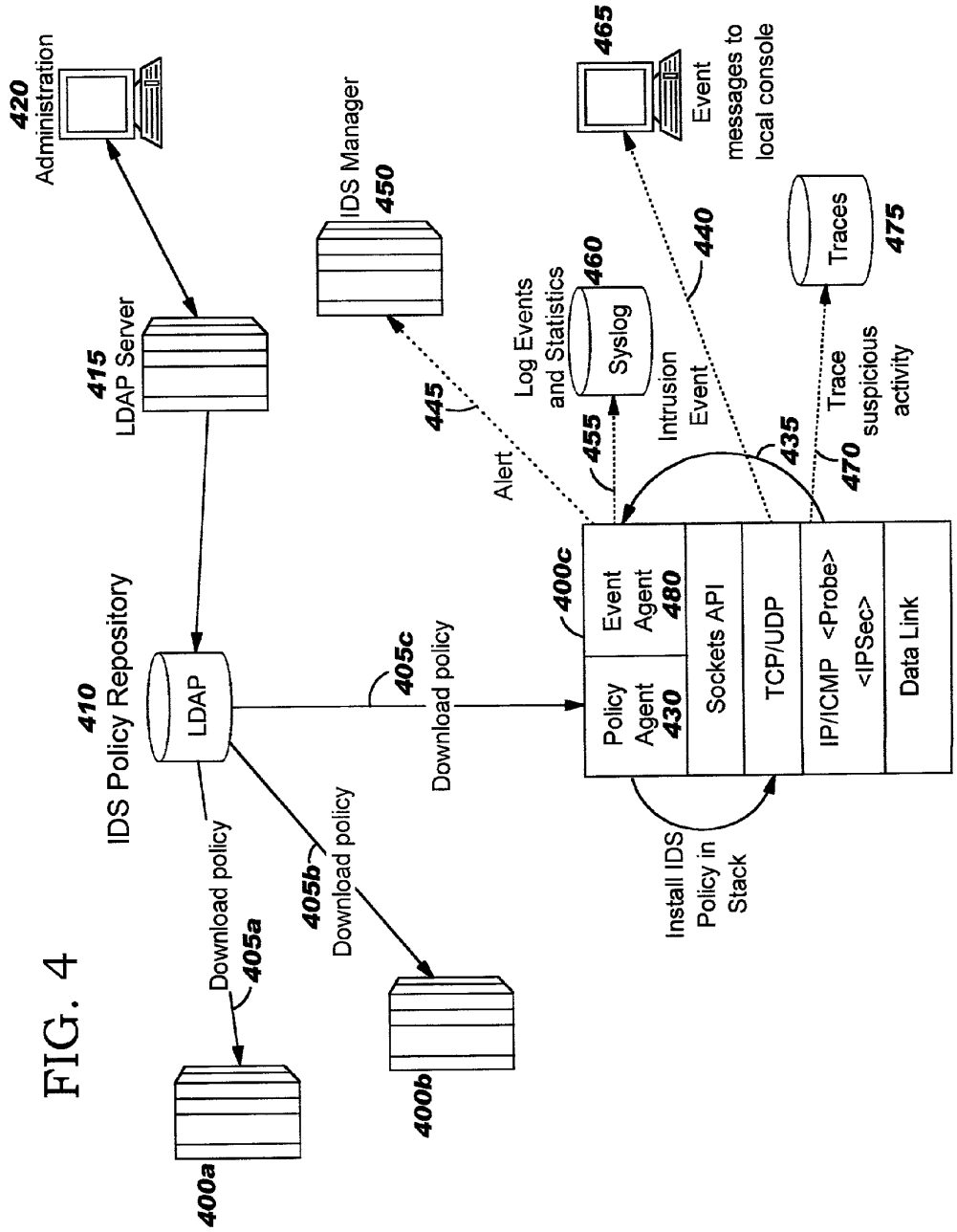
420
Administration
415
LDAP Server
410
IDS Policy Repository
LDAP
Download policy
405a
400a
405b
Download policy
400b
405c
Download policy
IDS Manager
450
445
Alert
Log Events
and Statistics
460
Syslog
455
Intrusion
Event
465
Event
messages to
local console
440
Traces
475
Trace
suspicious
activity
470
435
400c
Event
Agent
480
Policy
Agent
430
Sockets API
TCP/UDP
IP/ICMP <Probe>
<IPSec>
Data Link
Install IDS
Policy in
Stack

FIG. 4

FIG. 5

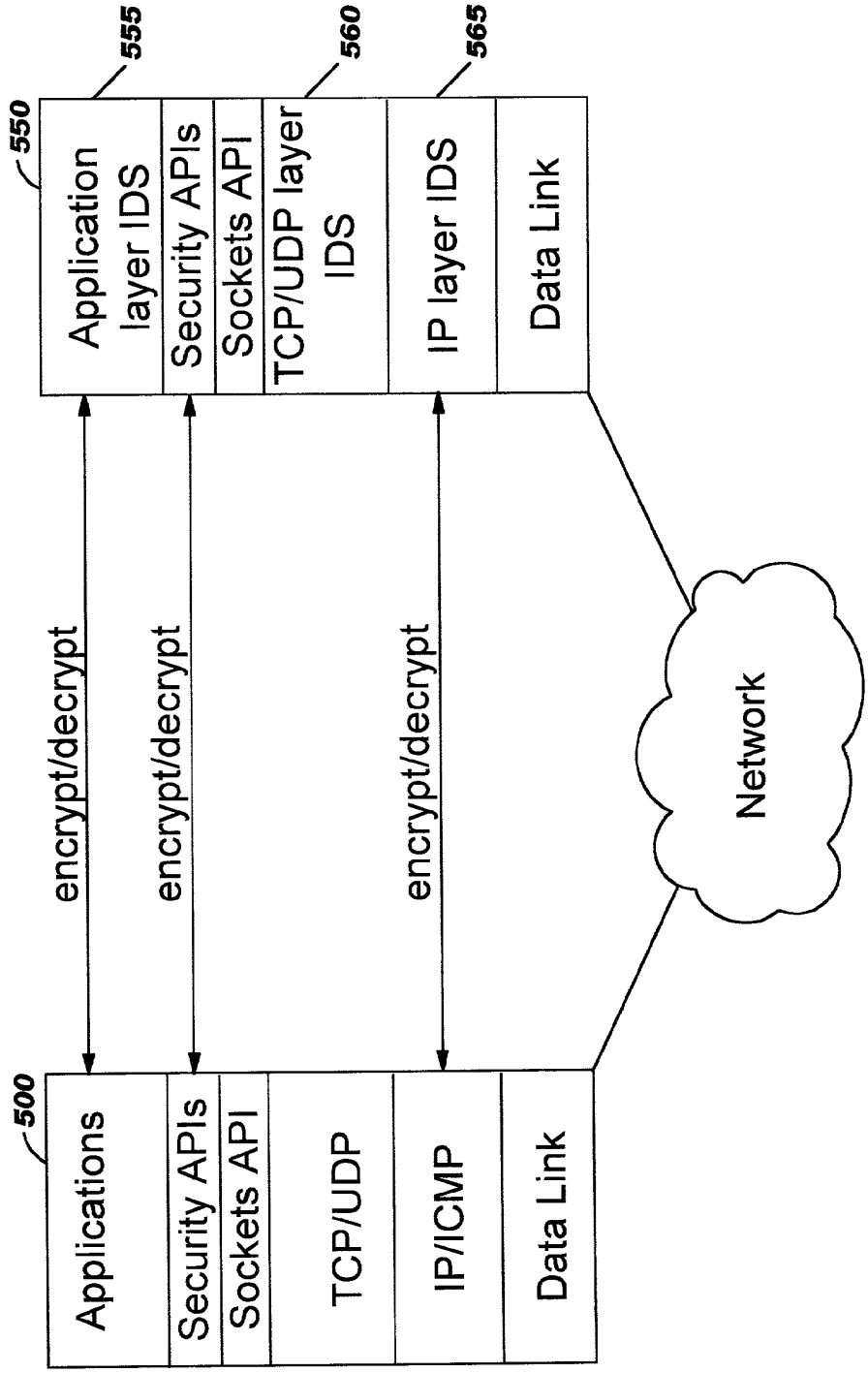
550
555
560
565
Application layer IDS
Security APIs
Sockets API
TCP/UDP layer IDS
IP layer IDS
Data Link
encrypt/decrypt
encrypt/decrypt
encrypt/decrypt
Network
500
Applications
Security APIs
Sockets API
TCP/UDP
IP/ICMP
Data Link

FIG. 6

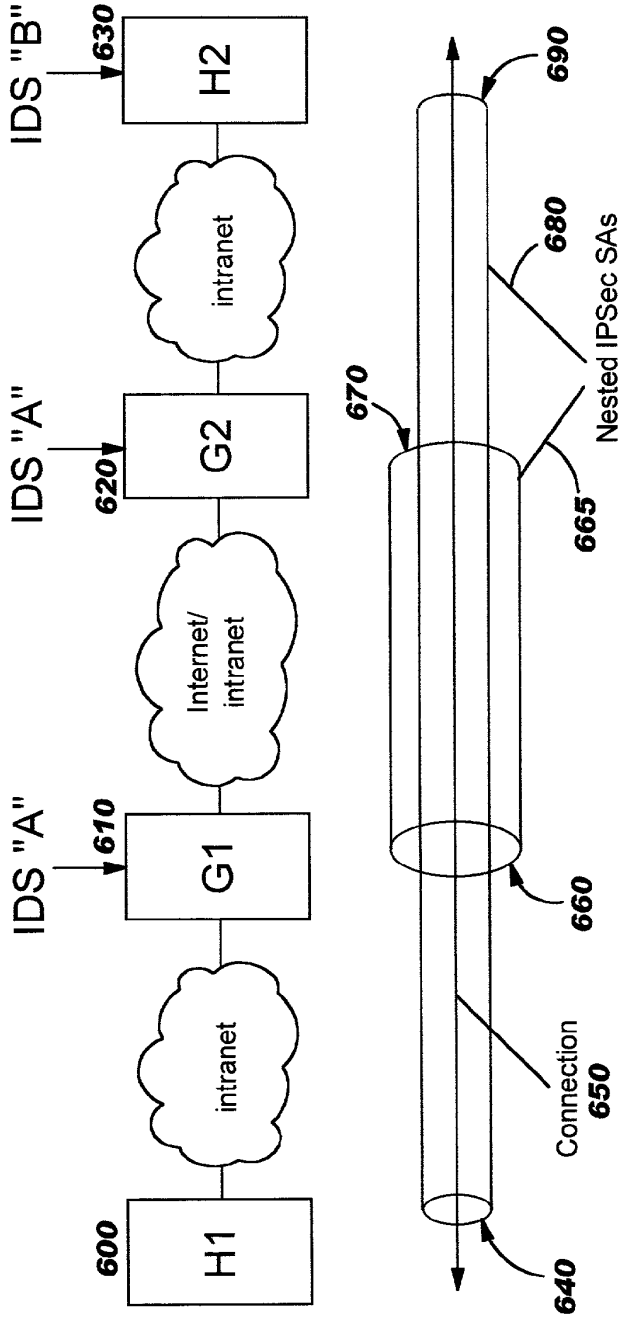
IDS "B"
630
H2
intranet
IDS "A"
620
G2
Internet/
intranet
IDS "A"
610
G1
intranet
600
H1
690
680
Nested IPSec SAs
670
665
660
Connection
650
640

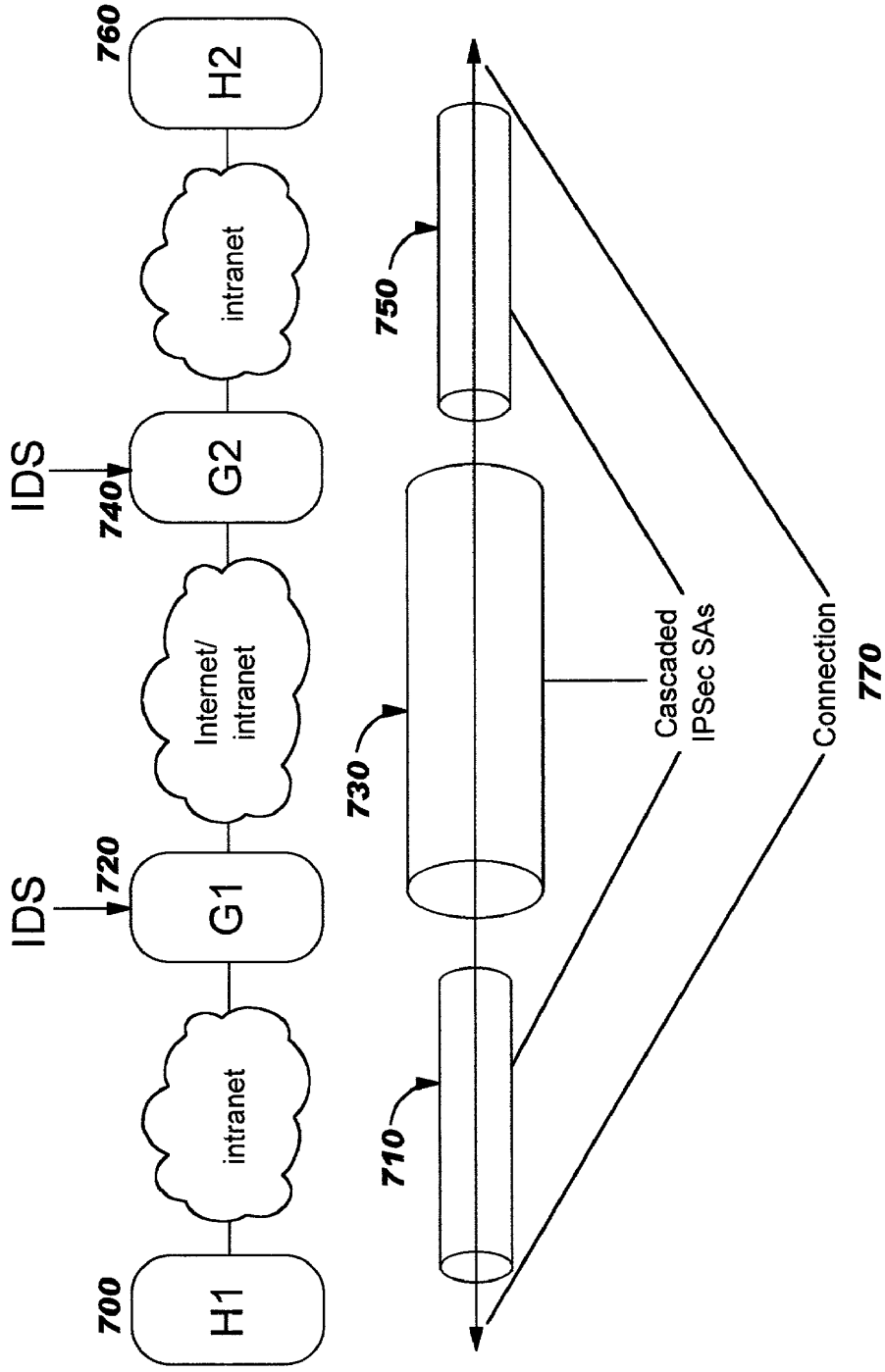

FIG. 7
(Prior Art)

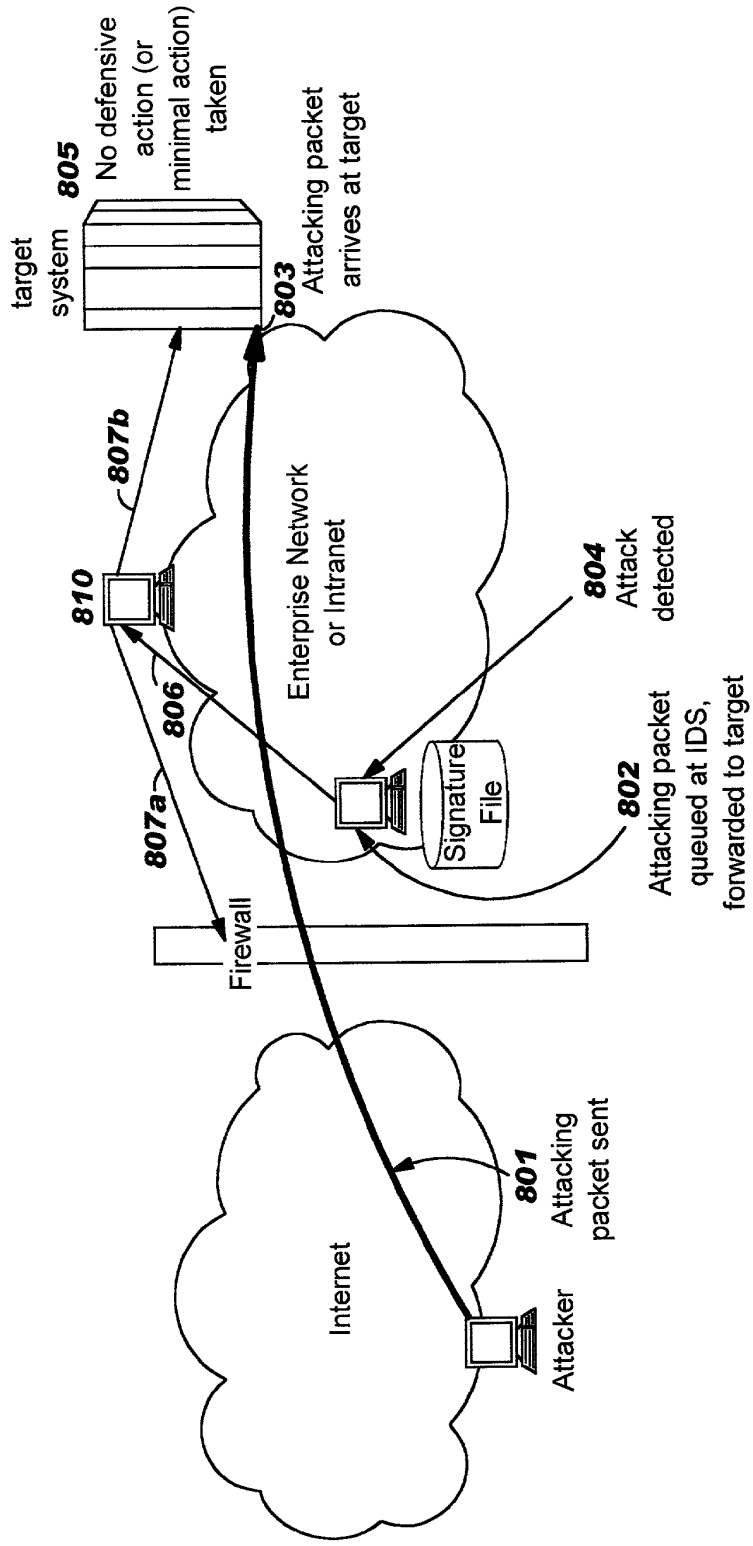

FIG. 8
(Prior Art)

FIG. 9

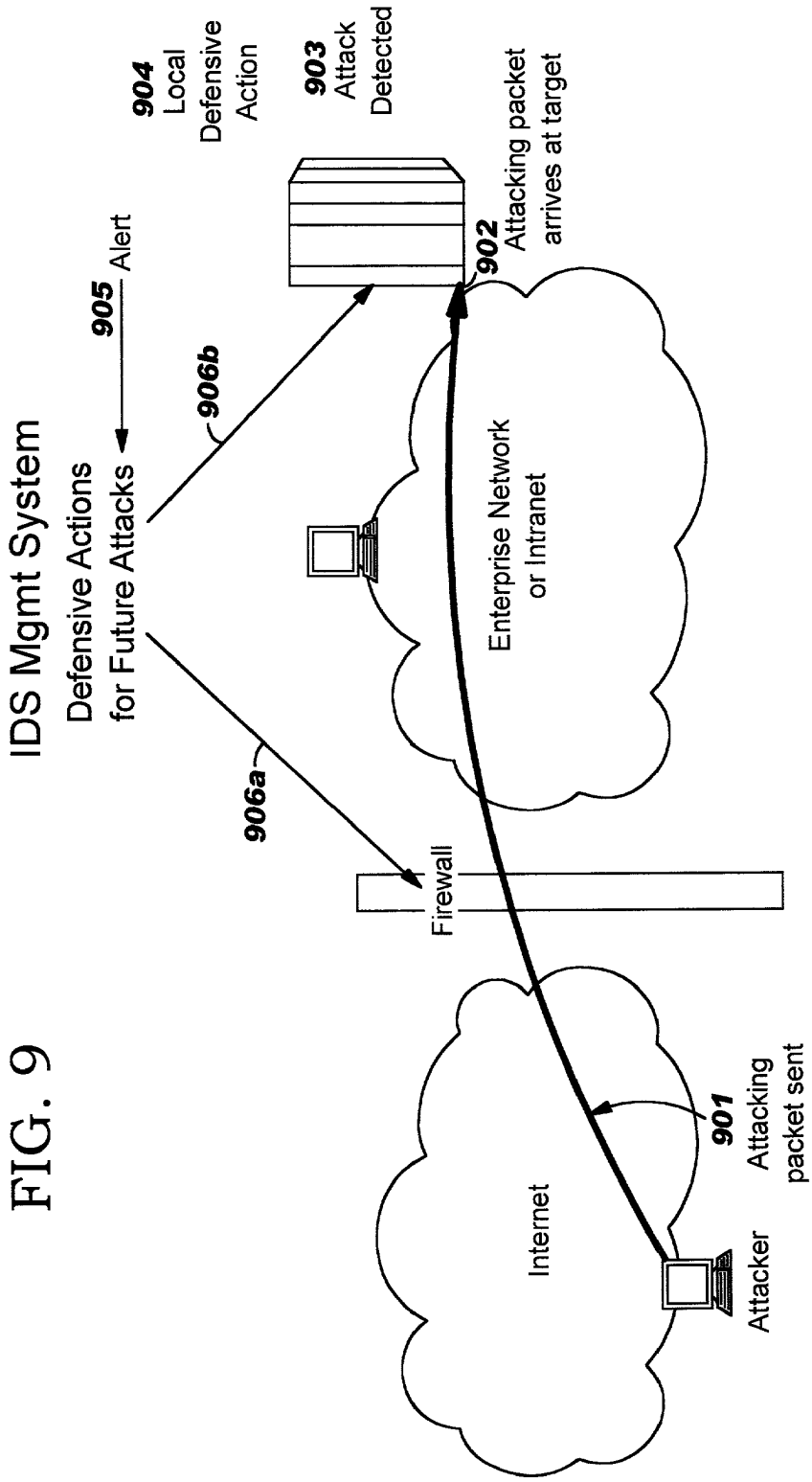
IDS Mgmt System
Defensive Actions
for Future Attacks
905 Alert
904 Local Defensive Action
903 Attack Detected
902 Attacking packet arrives at target
906b
906a
Enterprise Network or Intranet
Firewall
Internet
901 Attacking packet sent
Attacker

FIG. 10

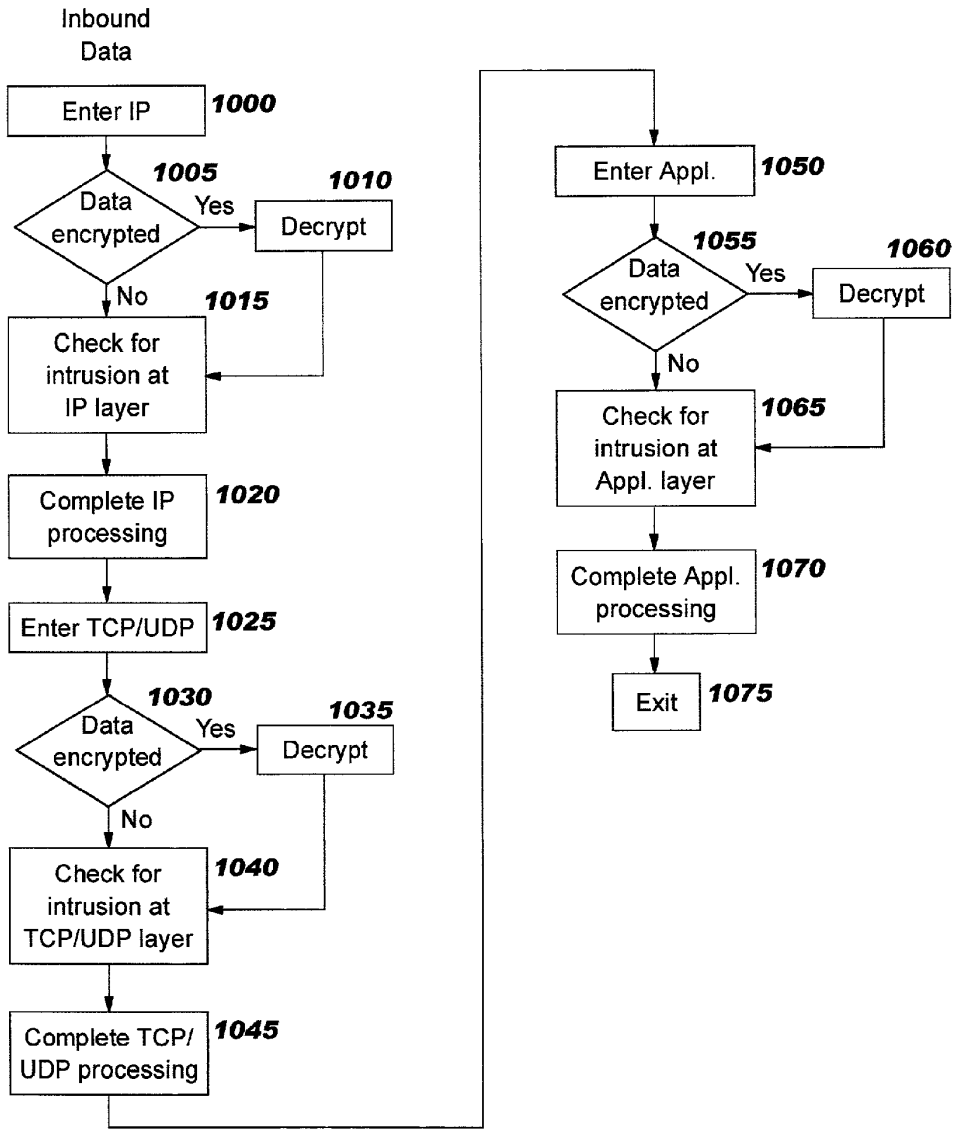
Inbound Data
Enter IP
1000
1005
Data encrypted
Yes
1010
Decrypt
No
1015
Check for intrusion at IP layer
Complete IP processing
1020
Enter TCP/UDP
1025
1030
Data encrypted
Yes
1035
Decrypt
No
Check for intrusion at TCP/UDP layer
1040
Complete TCP/ UDP processing
1045
Enter Appl.
1050
1055
Data encrypted
Yes
1060
Decrypt
No
Check for intrusion at Appl. layer
1065
Complete Appl. processing
1070
Exit
1075

FIG. 11

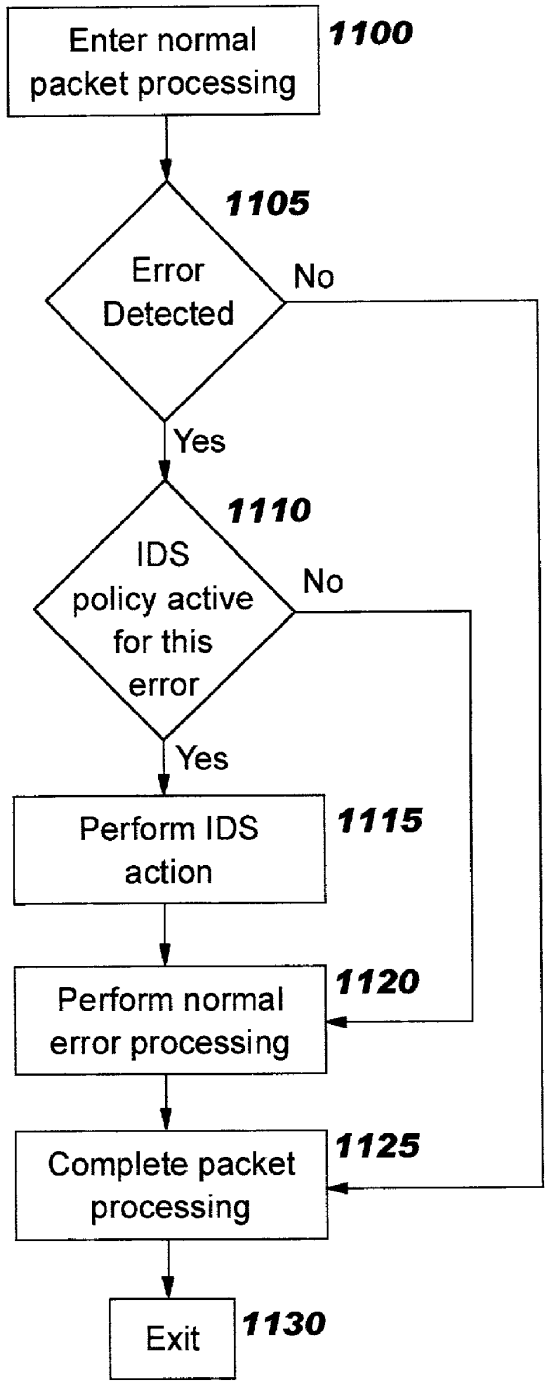
Enter normal packet processing
1100
1105
Error Detected
No
Yes
1110
IDS policy active for this error
No
Yes
Perform IDS action
1115
Perform normal error processing
1120
Complete packet processing
1125
Exit
1130

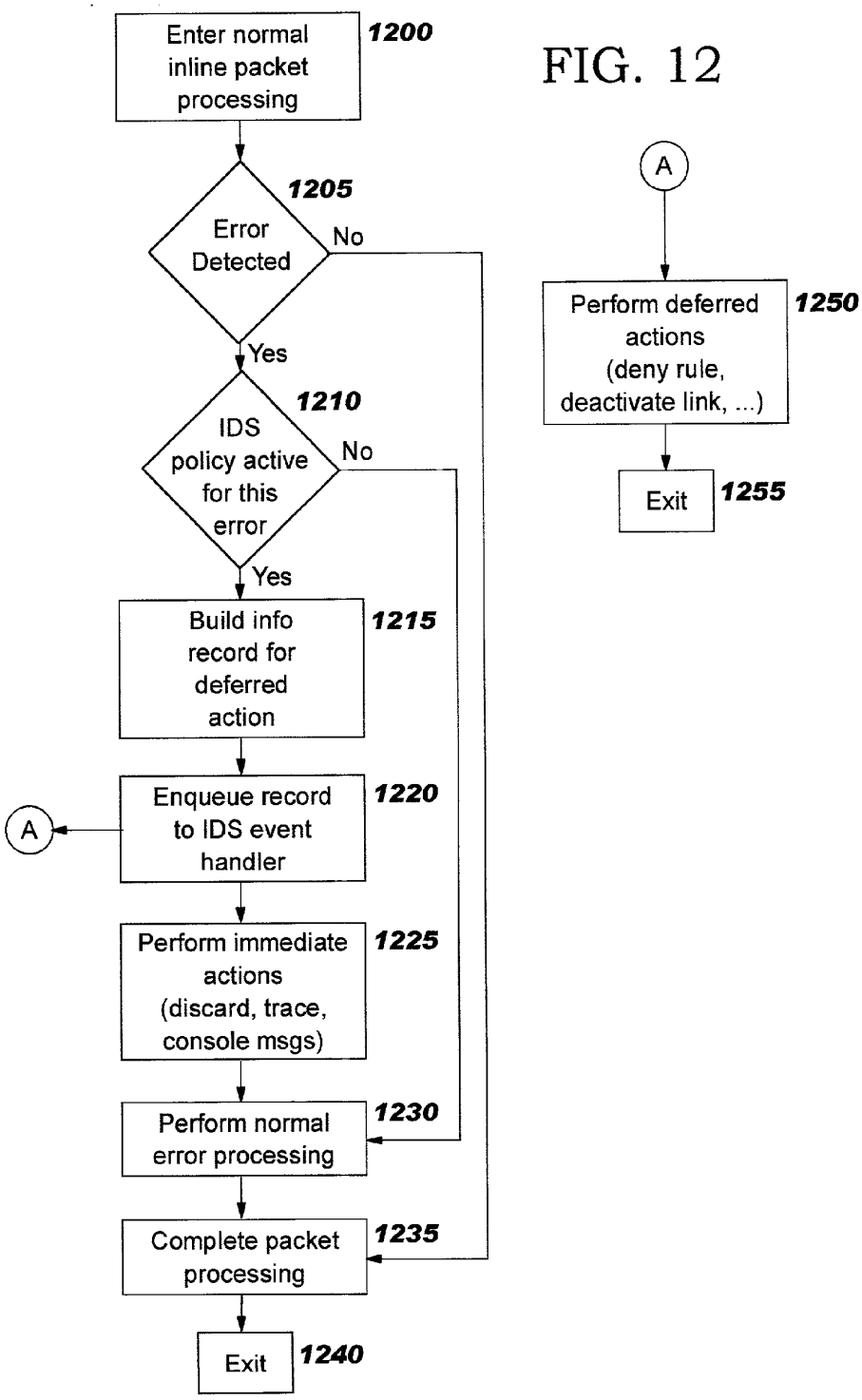
Enter normal inline packet processing
1200
Error Detected
1205
No
Yes
IDS policy active for this error
1210
No
Yes
Build info record for deferred action
1215
Enqueue record to IDS event handler
1220
A
Perform immediate actions (discard, trace, console msgs)
1225
Perform normal error processing
1230
Complete packet processing
1235
Exit
1240
A
Perform deferred actions (deny rule, deactivate link, ...)
1250
Exit
1255

FIG. 12

FIG. 13

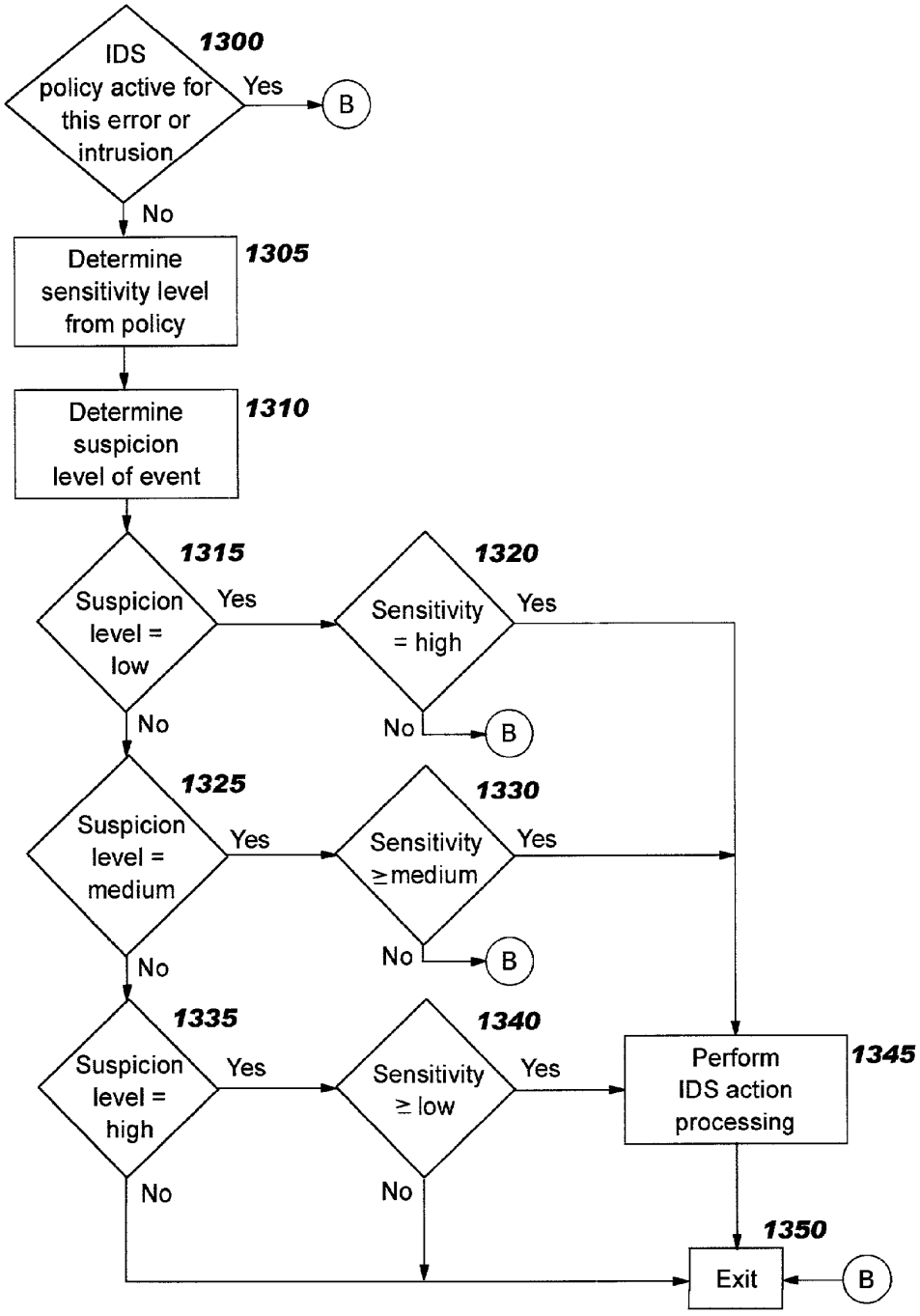
1300
IDS policy active for this error or intrusion
Yes
B
No
1305
Determine sensitivity level from policy
1310
Determine suspicion level of event
1315
Suspicion level = low
Yes
1320
Sensitivity = high
Yes
No
B
No
1325
Suspicion level = medium
Yes
1330
Sensitivity ≥medium
Yes
No
B
No
1335
Suspicion level = high
Yes
1340
Sensitivity ≥ low
Yes
1345
Perform IDS action processing
No
No
1350
Exit
B

FIG. 14

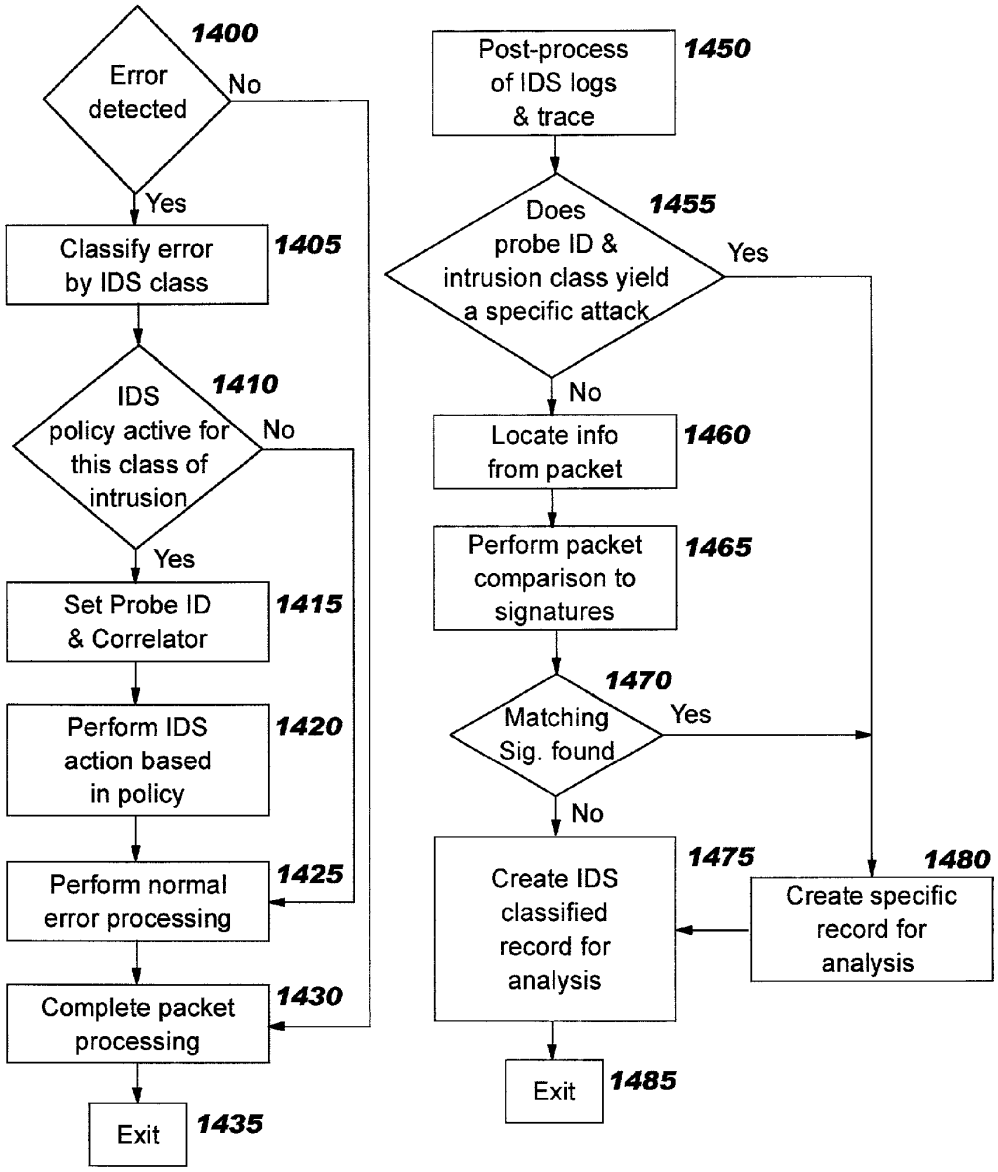
1400
Error detected
No
Yes
Classify error by IDS class
1405
IDS policy active for this class of intrusion
1410
No
Yes
Set Probe ID & Correlator
1415
Perform IDS action based in policy
1420
Perform normal error processing
1425
Complete packet processing
1430
Exit
1435
Post-process of IDS logs & trace
1450
Does probe ID & intrusion class yield a specific attack
1455
Yes
No
Locate info from packet
1460
Perform packet comparison to signatures
1465
Matching Sig. found
1470
Yes
No
Create IDS classified record for analysis
1475
Create specific record for analysis
1480
Exit
1485

FIG. 15

1500

Sensitivity (from policy)	Low Suspicion Event (LS)	Medium Suspicion Event (MS)	High Suspicion Event (HS)
Low			Count
Medium		Count	Count
High	Count	Count	Count

1510 1520 1530

FIG. 16

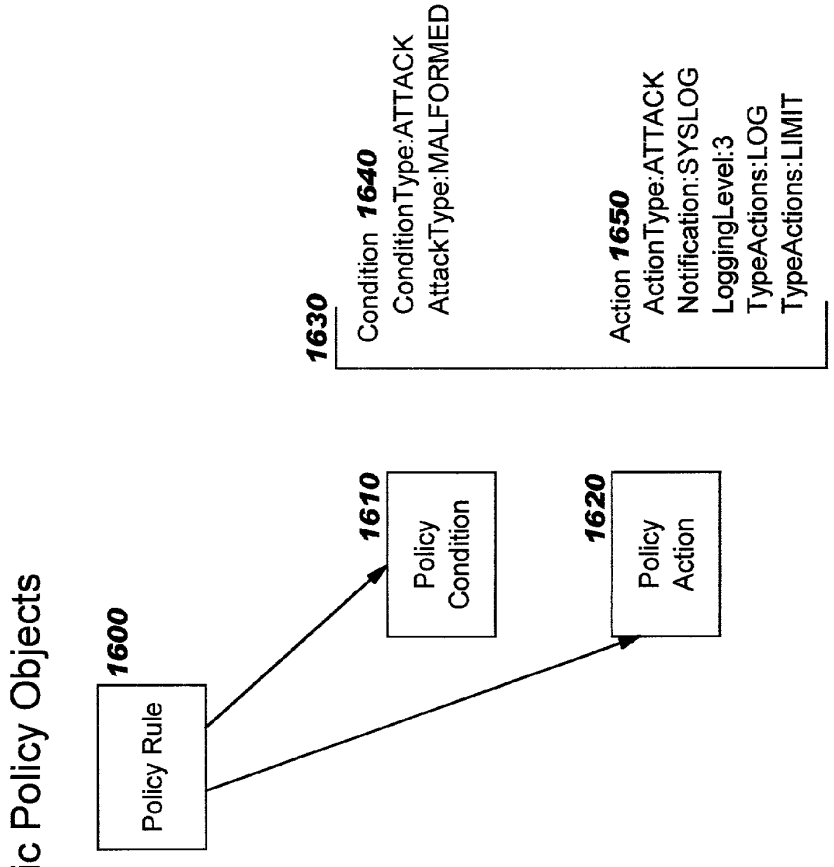
Basic Policy Objects
1600
Policy Rule
1610
Policy Condition
1620
Policy Action
1630
Condition 1640
ConditionType:ATTACK
AttackType:MALFORMED
Action 1650
ActionType:ATTACK
Notification:SYSLOG
LoggingLevel:3
TypeActions:LOG
TypeActions:LIMIT

FIG. 17

1700

Socket State (1710)	Event (1720)	Event Classification (1730)
Any state	recv unexpected flags (SYN+FIN...)	high suspicion
RESERVED	recv any packet	high suspicion
Unbound, not RESERVED	recv any packet	medium suspicion - app may be temporarily down
Listen	recv SYN	classification deferred if syn queued.
Half open connection	recv ACK	low suspicion - connection handshake completed
Half open connection	recv RST	medium suspicion - scanner covering tracks?
Half open connection	final time-out (and not syn flood)	high suspicion - scanner abandoning handshake?
Any connected state	seq# out of window	low suspicion - perhaps duplicate packet
Any connected state	recv standalone SYN	low suspicion - perhaps peer reboot
Any connected state	final time-out	medium suspicion - peer abandoned connection

1740

1750

Policy Sensitivity and Event Suspicion Levels for TCP Port Scan

FIG. 18

IDS Policy Sensitivity and Event Suspicion Levels

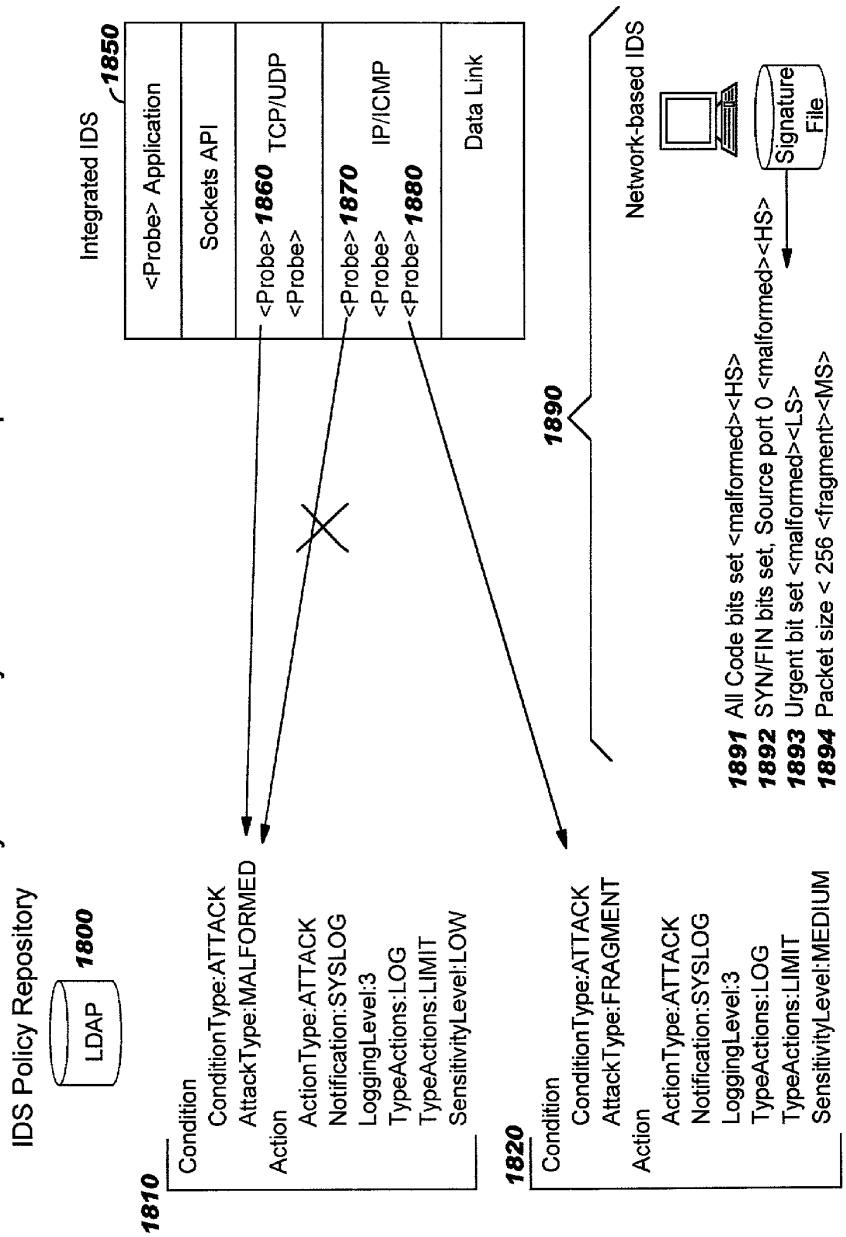

FIG. 19

Conditions and Actions - Relationship to specific attacks

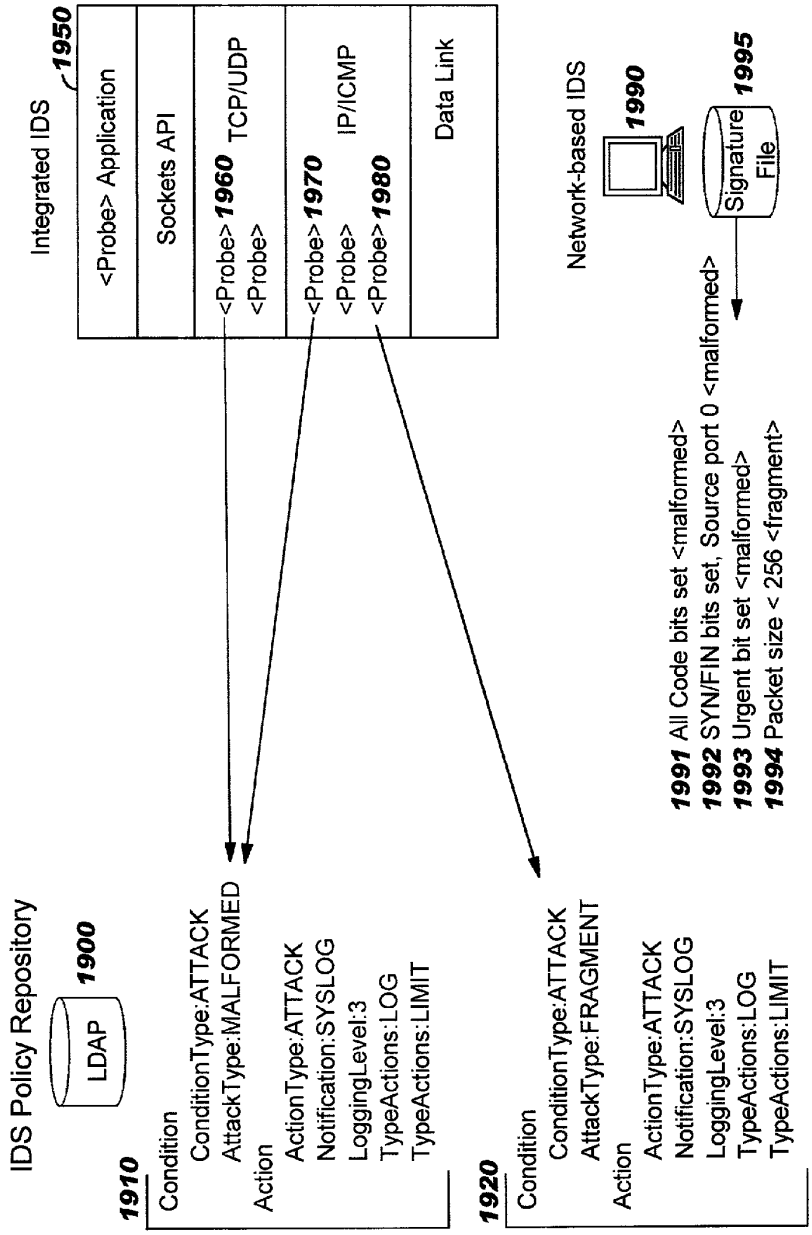

INTRUSION EVENT FILTERING AND GENERIC ATTACK SIGNATURES

RELATED INVENTIONS

[0001] The present invention is related to the following commonly-assigned U.S. patents, all of which were filed on Dec. 5, 2001 and which are hereby incorporated herein by reference: U.S. Pat. No. _____ (Ser. No. 10/007,593), entitled "Kernel-Based Security Implementation"; U.S. Pat. No. _____ (Ser. No. 10/007,446), entitled "Policy-Driven Kernel-Based Security Implementation"; U.S. Pat. No. _____ (Ser. No. 10/007,582), entitled "Offload Processing for Secure Data Transfer", and U.S. Pat. No. _____ (Ser. No. 10/007,581), entitled "Offload Processing for Security Session Establishment and Control". These U.S. patents are referred to hereinafter as "the related inventions". The present invention is also related to commonly-assigned U.S. Pat. No. _____ (Ser. No. 10/_____), entitled "Integrated Intrusion Detection Services", which was filed concurrently herewith.

BACKGROUND OF THE INVENTION

[0002] 1. Field of the Invention

[0003] The present invention relates to computer security, and deals more particularly with improving intrusion detection using sensitivity/suspicion levels for filtering intrusion events and/or using generic attack signatures as intrusion detection policy.

[0004] 2. Description of the Related Art

[0005] In the computer security field, "intrusion" is a broad term encompassing many undesirable activities. The objective of an intrusion may be to acquire information that a person is not authorized to have (referred to as "information theft"). It may be to cause business harm by rendering a network, system, or application unusable (referred to as "denial of service"). Or, it may be to gain unauthorized use of a system as a stepping stone for further intrusions elsewhere. Most intrusions follow a pattern of information gathering, attempted access, and then destructive attacks.

[0006] Some attacks can be detected and neutralized by the target system, although not typically in real time. Other attacks cannot be effectively neutralized by the target system. Most of the attacks also make use of "spoofed" packets which are not easily traceable to their true origin. Many attacks now make use of unwitting accomplices—that is, machines or networks that are used without authorization to hide the identity of the attacker. For these reasons, detecting information gathering, access attempts, and attack accomplice behaviors is a vital part of intrusion detection. (The term "attack" is sometimes used in the art as a distinct type of intrusion, as contrasted to a "scan" or "flood". As used herein, the term "attack" refers generally to all of these types of intrusions, except where specific ones of these intrusions are being described for illustrative purposes.)

[0007] As illustrated in **FIG. 1**, attacks can be initiated from outside the internal network (see elements **130, 135**) or from inside the internal network (see elements **110, 115**). Particularly vulnerable is an open system such as a public web server or any machine (see element **100**) that is placed in service to serve those outside the internal network **115**. A firewall **120** can provide some level of protection against attacks from outside. However, it cannot prevent attacks once the firewall has "approved" entry of a host into the internal network (as shown at **125**), nor can it provide protection in the case where the attack is initiated from inside the network (as in the case of the attacker at **110**). In addition, end-to-end encryption limits the types of attacks that can be detected by an intermediate device such as a firewall because the intermediate device is unable to evaluate the packets in cleartext for evidence of an attack.

[0008] An Intrusion Detection System (hereinafter, "IDS") can provide detection of many types of attacks. Common IDS types (illustrated in **FIG. 2**) currently deployed include sniffers and scanners. Sniffers operate in promiscuous mode, examining traffic that passes through on the local network. Sniffers are placed at strategic points in the network, such as in front of a firewall (see elements **210, 220**); behind a firewall (see elements **220, 230**); in the network (see element **240**); or in front of a host (see elements **250, 260**). Sniffers use "pattern matching" to try to match a packet against a known attack which is expressed as an "attack signature". Sniffers work best against single packet attacks: upon detecting that an inspected packet matches a particular attack signature, that packet can be dealt with appropriately (as further described below).

[0009] Commercial services such as IBM's Emergency Response Services (see element **200**) provide third-party logging and analysis of security alerts detected by a customer's IDS components. In the example of **FIG. 2**, the sniffer **210** placed before the customer's firewall **220** sends its alerts to this type of third-party alert processing service.

[0010] Scanners (see element **270**) look at log files for signs of attacks, which may be detected by inspecting a collection of packets. Scanners therefore do not inspect data packets as they are passing through the network. Instead, they operate in a post-processing mode.

[0011] The network sniffers and scanners which are currently deployed have a number of limitations. Five of these limitations are:

[0012] 1. Network sniffers (such as elements **210, 230, 240** in **FIG. 2**) cannot evaluate data that is encrypted unless the sniffer and the encryption endpoint are located at the same node. Because sniffers are not typically co-located with the packet destination, providing an encryption endpoint at the sniffer is contradictory with the goal of end-to-end encryption (that is, encryption where the endpoints are the client and application server).

[0013] 2. Processing signature files against every packet is very processor intensive. Many sniffers cannot process all packets, dropping packets that cannot be processed. Some installations deploy multiple sniffers, dividing the signature files into parts which are distributed to the individual sniffers. However, the ability to take real-time action in response to detecting a match against an attack signature still decreases as the backlog of traffic to analyze becomes larger.

[0014] 3. Network sniffers typically cannot deflect the attacking packet or directly perform other preventative measures when an attack is detected. Thus, a damaging attack might occur even when a network sniffer detects the attack. (Sniffers and scanners typically take no direct action to stop the attacking packets, but rather notify an IDS management system. An IDS management system cannot provide a

real-time reaction to prevent damage since the offending packet may reach the target system before the IDS system can respond.)

[0015] 4. Scanners (such as element **270** in **FIG. 2**) work by evaluating logs for statistical anomalies and known attacks. Scanners have the ability to detect attacks missed by sniffers because they can react to a pattern of behavior. Because of their reliance on patterns over time, they are not real time. Furthermore, the post-processing analysis may in some cases result in "false positives"—that is, a conclusion that an attack has occurred when in reality the traffic was not attack packets.

[0016] 5. Current attack signatures are written to cover single specific attacks. This results in IDSs not being able to detect new attacks until a new signature is developed and installed. Since the attack signatures are very specific, as new attacks are discovered, the signature lists can become large. As the signature lists increase, processing time at the IDS also increases, resulting in more missed attacks due to the IDS's failure to keep up with the incoming packet stream. Additionally, the IDS must be reloaded more often to pick up new signatures.

[0017] When an attack on a target system occurs, the damage may be extremely costly to repair. Accordingly, what is needed are improved techniques for performing intrusion detection which can increase the security of a target server or system.

SUMMARY OF THE INVENTION

[0018] An object of the present invention is to provide improved computer security.

[0019] Another object of the present invention is to provide improved intrusion detection.

[0020] Yet another object of the present invention is to reduce the overhead involved with performing intrusion detection.

[0021] Still another object of the present invention is to increase system sensitivity to intrusion detection events, without increasing false positive notifications.

[0022] Another object of the present invention is to support generic attack signatures, thereby reducing the overhead of detecting currently known attacks and facilitating detection of new attacks.

[0023] Other objects and advantages of the present invention will be set forth in part in the description and in the drawings which follow and, in part, will be obvious from the description or may be learned by practice of the invention.

[0024] To achieve the foregoing objects, and in accordance with the purpose of the invention as broadly described herein, the present invention provides methods, systems, and computer program products for improving intrusion detection. In a first preferred embodiment, this technique comprises: defining intrusion suspicion levels for inbound communications destined for a computing device on the computing network and using the defined intrusion suspicion levels to determine if a particular inbound communication destined for the computing device should be treated as an intrusion event. This technique may further comprise defining a sensitivity level for filtering intrusion events and determining the intrusion suspicion level of the particular inbound communication, wherein using the defined intrusion suspicion levels compares the sensitivity level to the determined intrusion suspicion level.

[0025] The determining preferably further comprises comparing conditions in the computing device to predetermined conditions which signal a potential intrusion. The conditions in the computing device preferably comprise contents of the particular inbound communication, and may also comprise a protocol state of a protocol stack which processes the particular inbound communication.

[0026] The technique may further comprise taking one or more defensive actions when it has been determined that the particular inbound communication should be treated as an intrusion event. These defensive actions may be determined by consulting intrusion detection policy information, which is preferably stored in a policy repository.

[0027] Using the defined intrusion suspicion levels may further comprise comparing the particular inbound communication to one or more attack signatures. Optionally, at least one of the attack signatures may be a class signature representing a class of attacks. The attack signatures are preferably specified as conditions in intrusion detection rules, and each of the intrusion detection rules preferably further comprises one or more actions that are to be taken when it has been determined that the particular inbound communication should be treated as an intrusion event.

[0028] This technique may operate in the computing device for which the particular inbound communication is destined, in which case it may optionally operate within layer-specific intrusion detection logic executing in a protocol stack running on the computing device; or, it may operate in a network device which analyzes communications directed to that computing device.

[0029] The technique may further comprise: specifying, for each of a plurality of potential intrusion events, a set of one or more conditions which describe the potential intrusion event; associating a sensitivity level with each of the sets of conditions; and determining a suspicion level of the particular inbound communication. In this case, using the defined intrusion suspicion levels preferably determines that the particular inbound communication should be treated as an intrusion event when conditions pertaining to the particular inbound communication match a selected one of the sets of conditions and the determined suspicion level maps to the sensitivity level associated with the selected set of conditions.

[0030] In a second preferred embodiment, this technique comprises: classifying an inbound communication destined for a computing device on the computing network as to an intrusion class which is applicable to the inbound communication; and determining whether the applicable intrusion class has one or more associated intrusion detection policy specifications, and if so, performing actions specified in the one or more associated intrusion detection policy specifications. The actions may include writing a record describing the inbound communication to a file, wherein the record includes the applicable intrusion class. They record may also include an identification of a code element where the inbound communication was processed.

[0031] The technique of this second preferred embodiment may further comprise determining, for each of the

records of the file, whether the intrusion class and identification of the code element identify a specific attack, and if so, creating an analysis record for the identified specific attack. If the intrusion class and identification of the code element do not identify a specific attack, then this technique preferably further comprises: locating packet data pertaining to the record; comparing the located packet data to attack signatures; and if a matching attack signature is located by the comparison, creating an analysis record for a specific attack which corresponds to the matching attack signature, and otherwise creating an analysis record for the intrusion class.

[0032] The classifying operation may further comprise locating an attack signature which matches the inbound communication, and the determination may further comprise using one or more keywords which are associated with the located attack signature to retrieve the associated intrusion detection policy specifications.

[0033] The present invention may also be used advantageously in methods of doing business, for example whereby service providers may offer their customers improved intrusion detection processing as described herein.

[0034] The present invention will now be described with reference to the following drawings, in which like reference numbers denote the same element throughout.

BRIEF DESCRIPTION OF THE DRAWINGS

[0035] **FIG. 1** illustrates potential security attacks in a computer networking environment, according to the prior art;

[0036] **FIG. 2** illustrates a representative placement of intrusion detection components in a computer networking environment, according to the prior art;

[0037] **FIG. 3** illustrates a representative placement of intrusion detection components in a computer networking environment, according to several preferred embodiments of the present invention;

[0038] **FIG. 4** illustrates a representative architecture for intrusion detection services integrated into a target server or network-based system, according to the present invention;

[0039] **FIG. 5** illustrates the placement of network security protocols in connection endpoint systems (according to the prior art), and layer-specific intrusion detection processing in a target server according to several embodiments of the present invention;

[0040] **FIG. 6** depicts an end-to-end security approach which uses nested security associations, and

[0041] **FIG. 7** shows security provided by cascaded security associations;

[0042] **FIG. 8** shows a traditional network-based IDS, and the sequence of steps that may occur during an attack when using intrusion detection processing according to the prior art, and

[0043] **FIG. 9** shows how this attack processing differs when using the present invention in a target server;

[0044] FIGS. **10-14** provide flowcharts which illustrate logic that may be used to implement preferred embodiments of the present invention; and

[0045] FIGS. **15-19** provide explanatory material pertaining to IDS policy (including sensitivity level and suspicion level processing) and generic attack signatures.

DESCRIPTION OF PREFERRED EMBODIMENTS

[0046] The present invention defines an intrusion detection service that, in preferred embodiments, is integrated into a system or server (referred to hereinafter as a "target server" or "target system", or equivalently as a "destination server" or "host") that is the potential target of attack. This integrated intrusion detection service can fit into an IDS infrastructure comprised of a variety of IDS components, including IDS sensors (e.g. sniffers), scanners, analyzers, and an IDS management system. This integrated intrusion detection service preferably does not replace other IDS components in the network, but rather complements them. In fact, many security experts are proponents of using different types of IDS components (and components from different vendors) in order to have better attack coverage, drawing on the strengths of each IDS component. Thus, an implementation of the present invention may be added to an existing IDS to increase the protection afforded to an enterprise's computing resources.

[0047] By integrating the intrusion detection service in a target server in the manner disclosed herein, intrusion detection can be improved over prior art network-based intrusion detection. Embodiments of the present invention address the previously-discussed limitations of the prior art, and provide (at least) the following five advantages:

[0048] 1. Intrusion detection can be performed even though end-to-end encryption is in use.

[0049] 2. The overhead of intrusion detection operations is reduced.

[0050] 3. Evaluation of packets and response to potential attacks can be performed in real-time.

[0051] 4. Sensitivity to potential intrusion events may be increased, without increasing false positive notifications.

[0052] 5. Generic attack signatures are supported, thereby facilitating the detection of "new" attacks (i.e. attacks for which an attack-specific signature has not yet been developed and/or installed).

[0053] Each of the these five advantages will be discussed below in more detail. An implementation of the present invention may include functionality corresponding to each of these advantages, or alternatively, selected ones of the advantageous functions may be provided in an implementation. Furthermore, while all of these advantages may be realized when the intrusion detection service is integrated into a target system, the fourth and fifth advantages may be realized by implementing selected aspects of the present invention in a network-based solution (i.e. within a device located in the network path to the target server).

[0054] The related inventions disclose techniques for moving security processing (or control thereof) for security protocols such as SSL ("Secure Sockets Layer") and TLS ("Transport Layer Security") into the operating system kernel or protocol stack. In several embodiments of the related inventions, the security processing is performed in the TCP layer. (In another embodiment of the related inventions, the

security processing is offloaded to a component which is referred to therein as an "encryption component" or "security offload component"; in this embodiment, the TCP layer is responsible for communicating control information to the encryption component.) By moving security processing (or control thereof) into the kernel, the related inventions allow layers of the stack to access cleartext data. The present invention leverages this access to cleartext data to provide improved intrusion detection services, as disclosed herein.

[**0055**] The present invention will now be described in more detail with reference to **FIGS. 3 through 19**.

[**0056**] **FIG. 3** depicts a representative placement of intrusion detection components in a computer networking environment, according to several preferred embodiments of the present invention. By comparing this diagram to the prior art component placement shown in **FIG. 2**, it should be noted that the sniffer **250** located directly in front of the host **260** has not been shown. Host **310** is depicted in this example as taking responsibility for its own intrusion detection. (It may be desirable in some installations to continue using a sniffer in front of host **310**, for example to increase the likelihood of covering attacks that might not be detected by the integrated IDS.) The alerts which were sent to IDS management system **300** from sniffer **250** have also been removed in this example, and alerts may now be sent to this management system **300** directly from host **310**. The sniffer **210** located in front of firewall **220**, along with its related IDS components, has also been removed from the diagram in **FIG. 3** in order to simplify the diagram. As stated earlier, it is often advantageous to use a mixture of different types of IDS components, and therefore, an enterprise may wish to continue using intrusion detection components which are located in the network (such as sniffers **230**, **240**, **250**), along with the integrated IDS of the present invention.

[**0057**] The diagram in **FIG. 3** also illustrates that preferred embodiments of the present invention may optionally use IDS policy information for configuration of the host **310**. Preferably, the IDS policy information **330** comprises a signature file **320** to be used when evaluating packets for potential attacks. In preferred embodiments, this signature file **320** uses generic policy rules of the type disclosed herein. In alternative embodiments, the signature file may contain specific attack signatures, or a combination of specific attack signatures and generic policy rules. (The policy rule format may be used with specific attack signatures, if desired in a particular implementation.) When policy rules are specified, the rules preferably comprise condition parts that describe characteristics of an attack, and which are used to determine when the rule is triggered, along with action(s) to be taken in response to detecting the particular attack signatures in the signature file. The IDS policy information may also include other types of intrusion detection information: other types of IDS information that are deemed useful in a particular implementation may include other heuristics that may be useful in describing characteristics of an attack. The term "IDS policy" as used hereinafter is intended to encompass both attack signatures and other types of IDS information, unless otherwise indicated (either explicitly or by context).

[**0058**] The IDS policy information **320** is preferably stored in a repository such as a network-accessible directory. For purposes of illustration but not of limitation, the repository is referred to herein as an "LDAP directory". (LDAP directories are well known in the art, and will not be described in detail herein.) Use of a network-accessible directory promotes uniform treatment of intrusion detection throughout an enterprise, as the administrator can work with consistent policy formats for all intrusion detection sensors. Preferably, an object-oriented directory or database is used, in order to take advantages of relationships among data to narrow the search process as well as to efficiently associate response data with broad classes of attacks. ("Classes" of attacks will be described in more detail below.)

[**0059**] Attack signatures may optionally be stored separately from IDS policy that is expressed in the form of rules or heuristics. Or, attack signatures may be expressed as the condition part of rules.

[**0060**] As an example of the use of IDS rules or heuristics, a particular type of denial-of-service attack known as a "SYN flood" attack occurs when the first message of a 3-way handshaking exchange is sent from a "spoofed" source address that is currently not in use, and the server responds to this spoofed address with the second of the three messages. The third message will not be received at the server, because there is no system to receive and respond to the second message. This causes a half-open connection to exist at the server, which consumes server resources. If enough of these half-open connections are created, the server may become so resource-constrained that it is unable to respond to legitimate connection requests, thereby resulting in a denial-of-service situation. Prior art network-based IDS components cannot prevent this type of attack, because the large number of incoming "SYN" packets (i.e. the first of the three packets in the handshaking exchange) appears to indicate simply a very busy server. The integrated intrusion detection approach of the present invention, on the other hand, is able to detect when a suspicious number of half-open connections exists. For example, the intrusion detection logic may use a configurable threshold value that limits the number of half-open connections, and start replacing half-open connections with new connection requests (thereby avoiding the server rejecting valid connection requests). This threshold value may be stored in the IDS policy repository. (Alternatively, such values may be stored directly in control blocks or other storage used by the protocol stack and/or application, or may be coded directly into IDS functions performed at layers of the networking protocol or application, without deviating from the scope of the present invention. References to storing such information in an IDS policy repository should therefore be considered as illustrative but not limiting.)

[**0061**] Additional examples of the types of rules or heuristic information that may be stored in the IDS policy repository, and used according to the present invention to limit intrusions, include threshold values that define what constitutes a fast scan or slow scan. For example, the number of events from a single source IP address in a fixed time period may be counted and compared to a threshold. A fast scan is likely an attacking program targeted at a single machine, and might produce more than 10 countable events in a 1-minute period. A slow scan, on the other hand, is likely a careful and patient person trying to escape detection by probing a single port at a time. The slow scan might produce 20 countable events scattered over the course of an entire day. (The suspicion levels and sensitivity levels which are

further described below are preferably used in determining which events count toward these threshold values.)

[0062] A particular implementation of the present invention may find it useful to use both attack signatures and rules/heuristics for IDS policy; other implementations may find it useful to use only one of these types of information for IDS policy. Either approach is within the scope of the present invention.

[0063] **FIG. 4** illustrates an architecture for intrusion detection services integrated into a target server or network-based system, and is representative of how an implementation of the present invention communicates with other system components. As shown therein, a person such as a security administrator or other security expert may store IDS policy in a repository **410**, for example by interacting with an LDAP server **415** through an administration console **420**. Once the IDS policy information is available from repository **410**, it may be downloaded **405***a*, **405***b*, **405***c* to one or more servers **400***a*, **400***b*, **400***c*. As will be obvious to one of ordinary skill in the art, the servers to which the policy information is downloaded may be similar in terms of hardware and software, but they may alternatively be quite different. Thus, **FIG. 4** is not intended to imply that the servers are homogeneous. Furthermore, it should be noted that policy may be downloaded to network devices (in addition to, or instead of, downloading policy to servers) when aspects of the present invention are implemented using network devices.

[0064] A policy agent **430** (or analogous software functionality) preferably resides on the target server (or network device). This policy agent receives the downloaded IDS policy, and installs the IDS policy into the protocol stack. (The download operation may occur in response to a request from the policy agent, or it may be triggered in another way such as upon initialization of the system.) In preferred embodiments, the protocol stack implements TCP ("Transmission Control Protocol") and/or UDP ("User Datagram Protocol"), as well as IP ("Internet Protocol") and/or ICMP ("Internet Control Message Protocol").

[0065] The installation of the IDS policy into the stack may comprise loading the signatures and policy rules at a point where the stack can access this information; or, the information can be interpreted and installed into existing control blocks for more efficient run-time access. For example, the intrusion detection code which is integrated into the target server may be written to compare counters to configured values, as in the SYN flood example previously discussed. In this case, the threshold value(s) may be loaded into a designated area of a control block or set as the value(s) of variable(s) for use during the comparison.

[0066] Layer-specific IDS policy information may be isolated such that the code which processes a particular layer has ready access to pertinent policy information. For example, to control the number/percentage of messages sent to a particular application, the corresponding threshold value is preferably made available to the code which implements the TCP or UDP processing. (TCP/UDP header messages contain a port number value which is used to identify the application to which a packet is addressed. Thus, intrusion detection logic may keep track of the number of messages going to particular port numbers.)

[0067] Regardless of the form of the installation of IDS policy, in preferred embodiments the policy is not examined until an attack or intrusion event is detected. Preferably, the detection is performed by a "probe". This approach leverages as much existing error detection logic as possible. Many attacks are effective because they cause an error or unusual condition in the target system. By accessing the policy after an attack is detected, normal stack processing overhead is not impacted (or is very minimally impacted) unless an attack actually occurs. The term "probe" refers to functionality that is inserted into the kernel, for example as a module which may be invoked by pre-existing code. An IDS-oriented probe, according to embodiments of the present invention, preferably executes within the scope of error-handling logic, as will be described in more detail below. The probe may send intrusion event information **435** to a local event agent **480** for local processing. This event agent **480** may process the events and/or perform other actions which have been specified in the policy information for particular detected intrusion events.

[0068] When an intrusion (represented in **FIG. 4** by "intrusion event"**440**) is detected in a host **15** based implementation, defensive actions can be taken directly on the target system in real time. Preferably, these defensive actions are specified within the IDS policy information. (While defensive actions may occur on the target system in real time, IDSs outside of the target system cannot take immediate real-time action, even though such systems may potentially respond quickly after being notified of the intrusion.) Possible actions that may be taken in response to an intrusion include, but are not limited to: (i) discarding the packet being processed; (ii) connection limiting (i.e. limiting the resources/traffic associated with this connection); (iii) dynamically dropping a "deny" filter rule into the network to shun subsequent traffic; and/or (iv) reporting the intrusion to one or more entities.

[0069] The reporting actions which are possible include, but are not limited to: (i) sending an alert to an external management component (as shown at **445**, **450**); (ii) writing event records to a system log and/or to a console (as shown at **455**, **460** and **440**, **465**); (iii) recording packets associated with intrusion activities in a trace or other repository (as shown at **470**, **475**); and/or (iv) writing statistics records on normal behavior to establish baselines as to what constitutes abnormal behavior, which could be indicative of an intrusion. (These statistics may then be used to establish further IDS policy conditions.) The act of performing reporting actions such as these may itself be specified as one or more policy actions.

[0070] By integrating the intrusion detection operations into the target server (as shown by the expanded detail for server **400***c* of **FIG. 4**), according to several preferred embodiments of the present invention, knowledge of internal conditions (such as memory and CPU usage), internally kept performance data, protocol states (such as whether a particular connection is in the handshaking phase, or has already completed handshaking, and so forth), available services, queue depths, etc. may be exploited in determining whether an intrusion has occurred and should be reported.

[0071] The manner in which embodiments of the present invention address the five previously-discussed limitations of prior art network-based intrusion detection systems, and provide the five advantages listed above, will now be described in more detail.

[0072] First, a host-based implementation of the present invention enables performing intrusion detection on incoming network traffic even when end-to-end security is used. As indicated earlier, end-to-end encryption and intrusion detection performed within the network are not compatible technologies. The goal of end-to-end security is to obscure cleartext, and network-based IDSs need cleartext access to perform their function.

[0073] Many attacks can occur based on the protocol headers that precede the application data in a packet. As an example, IPSec ("Internet Protocol Security") may be used to protect data transmitted between intermediate points in the network. IPSec, when using Encapsulating Security Payload protocol, can encrypt the TCP header and the application payload. In addition, the IP header itself can be encrypted if the original packet is tunneled inside another IPSec header using an IPSec mode called "tunnel mode". Network-based IDSs of the prior art do not have access to the cleartext data when true end-to-end IPSec is used. Host-based embodiments of the present invention solve this problem by evaluating packets for potential intrusion events on the target system (which is also an IPSec endpoint): all intrusion detection points that rely on access to cleartext data protected by IPSec occur after IPSec decryption (on inbound traffic) and before IPSec encryption (on outbound traffic). Although the examples and discussion herein use IPSec (which is an IP layer process), the methodology could be applied to any security protocol implemented at any layer of the protocol stack, such as SSL, Kerberos, or secure network services such as SNMPv3.

[0074] With host-based embodiments of the present invention, the evaluation of packets for intrusion detection for attacks on certain protocols is placed in the target system, where cleartext data can be accessed and analyzed. The intrusion detection process may be structured such that layer-specific intrusion evaluations may be performed. For example, IDS evaluation of problems with the IP header are placed in the IP layer, probes that trigger off of problems with the TCP header are placed in the TCP layer, and problems in the application data stream are placed in the application layer. Using this placement, the intrusion detection logic that can detect an attack operates in the layer at which the attack is targeted. Attack signature files may also be structured in a layer-specific manner to increase the efficiency of signature comparisons. For example, attack signatures which can be detected by IP header problems may be grouped together, and these signatures can be omitted when performing TCP/UDP-layer analysis.

[0075] The diagram in **FIG. 5** shows the placement of network security protocols (such as SSL or Kerberos) that have endpoints in systems **500** and **550**. System **550** is a destination server using the techniques of the present invention; server **500** may be an intermediate server in a network, or it may represent a client system (such as a user terminal). **FIG. 5** also shows the placement of the layer-specific intrusion detection processing in server **550**. Thus, application-layer IDS functions are placed in the application layer, as shown at **555**; TCP-layer IDS functions are placed in the TCP layer, as shown at **560**; and IP-layer IDS functions are placed in the IP layer, as shown at **565**. Each of the IDS processing functions may use IDS policy information and/or attack signatures that have been installed and are accessible to the layers of the protocol stack.

[0076] **FIG. 6** illustrates an end-to-end security approach which uses nested security associations. The target server in this example is denoted as host "H2"**630**, and the client is "H1"**600**. H1 and H2 have a connection **650** between them, and both have an IPSec endpoint (**640** and **690**, respectively) of an IPSec security association ("SA") **680**. Gateway servers "G1"**610** and "G2"**620** are security nodes in the network path between the client **600** and the server **630**. Suppose that these gateway servers **610**, **620** are performing IPSec authentication between themselves. Then, an IPSec SA **665** extends between gateway G1**610** and gateway G2**620**. Gateway G1 is an IPSec endpoint **660** for this SA **665**, and gateway G2 is the other endpoint **670**. Further suppose that the gateways **610**, **620** are performing an IDS function "A" for the traffic exchanged over SA **665**. This IDS function A will fail to recognize any attacks by client **600** because the data that is available at endpoints **660**, **670** is encrypted over the entire scope of SA **680** (as well as over the scope of connection **650**, if security protection beyond IPSec is in use), and therefore packet data created by client **600** is encrypted until it reaches target host **630**. The IDS function "B" which is integrated (according to the present invention) into the target server H2**630**, on the other hand, can recognize an attack since IDS function B is located at the end-to-end encryption endpoint and therefore has access to cleartext data.

[0077] Without the integrated IDS on H2**630**, the installation of the prior art is faced with the choice of not doing end-to-end encryption (in order to be able to do intrusion detection), not doing intrusion detection (in order to be able to do end-to-end encryption), doing both end-to-end IPSec and intrusion detection but accepting the possibility that many attacks will go undetected, or perhaps using cascaded security associations. (Note that IPSec might be in use only for "important " traffic of the enterprise, and a relatively large percentage of the enterprise's traffic might therefore not be encapsulated or encrypted by IPSec. Additionally, even if an enterprise intends for all of its traffic to be protected with IPSec, other systems can still direct attacks at the enterprise in the clear. These are scenarios where attacks may be detected by an IDS when both IPSec and intrusion detection are used. Other attacks, however, will be invisible to prior art systems when using IPSec and intrusion detection. Examples include attacks from employees of the enterprise and attacks from trusted business partners having machines that participate in the IPSec traffic. These examples of invisible attacks were discussed with reference to **FIG. 1**.)

[0078] Use of cascaded security associations, and its limitations, will now be described with reference to **FIG. 7**.

[0079] **FIG. 7** illustrates a possible prior art solution to IDS limitations when end-to-end IPSec encryption for a connection **770** is desired in the absence of the integrated IDS of the present invention. As shown therein, "cascaded" IPSec SAs are used to provide end-to-end encryption for the connection. That is, three IPSec SAs **710**, **730**, **750** are established in a series from end to end, with the SAs ending in network devices (gateway servers **720**, **740**, in this example) that are performing intrusion detection. In the scenario of **FIG. 7**, the IDS function in servers **720**, **740** has access to cleartext data so that IDS evaluation can occur. Drawbacks of this approach are performance degradation (i.e. the increased processing requirements of performing

decryption and re-encryption in each gateway, for each packet, and the requirement that the IDS signature matching be performed on an active gateway node rather than on a passive sniffer) and security exposures. The security exposure arises because data is exposed in the intermediate server (at least in its security function or component). This is less desirable than true end-to-end security, and requires that the true endpoint machines (illustrated by hosts **700**, **760**) must "trust" these intermediate network devices (illustrated by gateways **720**, **740**). This trust requirement is another drawback of the cascaded approach shown in **FIG. 7**, wherein the SA endpoints cannot verify the digital credentials (such as a host-based X.509 digital certificate) of the true connection endpoints. Instead, each IPSec endpoint can only verify the credentials of its nearest tunnel endpoint. (For example, gateway G**2740** and host **760** can verify each other's credentials, and gateway G**2740** can verify the credentials of gateway G**1720**, but host **760** cannot verify the credentials of gateway **720** or of host **700**, and so forth.)

[**0080**] End-to-end encryption using cryptographic network security protocols and intrusion detection are both key security solutions, yet in prior art approaches, as has been stated, end-to-end security and intrusion detection which is performed within the network are incompatible. By allowing both security solutions to coexist, the present invention provides significant advantages over the prior art. A target server implementing the integrated IDS solution of the present invention will have a competitive advantage over other servers which do not implement this integrated solution, by providing a capability to use both security technologies together.

[**0081**] Host-based embodiments of the present invention address the second of the five previously-discussed limitations of prior art network-based intrusion detection systems, and provide the second of the five advantages listed above, by enabling the overhead of intrusion detection to be significantly reduced. Therefore, intrusion detection can be evaluated in real time, and a real-time response to an attack (or a potential attack) at the target server can be provided.

[**0082**] The host-based integrated IDS of the present invention avoids the overhead of per-packet examination against a table of signatures which may contain entries for a potentially large number of known attacks. The prior art approach for evaluating "live" traffic for intrusion detection is to evaluate each packet against the table of signatures, which can be very performance-intensive. When the IDS is integrated into the target server, as disclosed herein, the prior art work-around of deploying multiple sniffers and dividing the signature files into parts which are distributed to those sniffers is no longer viable. Thus, comparing every packet to a signature file when using an integrated IDS approach may, in some environments, render the use of the integrated IDS as performance prohibitive. An optimization is therefore defined herein to solve this problem, wherein a host-based embodiment of the present invention implements the intrusion detection code using probes that execute only if existing error-handling logic is entered. (That is, the intrusion detection logic is implemented within, or called by, existing error-handling logic.) By leveraging existing error-handling logic, the processing cost of performing intrusion detection for many types of intrusions is reduced: the incremental cost of intrusion detection for these intrusions is incurred only if an error condition (that could be an intrusion) is detected. (For some types of intrusions, such as scans, it is still necessary to monitor packets which do not have errors. In addition, some seemingly-valid packets may be indicative of attacks, and thus logic to check for these attacks needs to be implemented outside the error-handling path. An example of this case is a packet that is fragmented within the first 256 bytes; no networks use a message transmission unit size less than 256 bytes, and thus even though packet fragmentation is a valid operation, there is never a legitimate technical reason for fragmenting the beginning of the packet in this manner.)

[**0083**] Note that a probe operating in this manner could either evaluate the packet against a set of signatures, or the probe could identify a particular attack (or attack type) based on information provided by the error-handling logic. Using information about this specific, already-encountered error may often allow for even more efficient processing of an intrusion detection event. That is, with this approach, the IDS policy can be looked up using information about the error condition/attack which was detected as a lookup key, and the action corresponding to this policy entry (or entries, as appropriate) can then be taken.

[**0084**] Optionally, signature files may be organized or partitioned to provide more efficient processing. When the comparison against attack signatures is to be performed within error-handling logic, according to the optimization disclosed herein, contextual information is known that may limit the potential candidate signatures. Thus, only those signatures which are pertinent to this context need to be compared to the suspected attacking packet. For example, signatures pertaining to malformed packets may be grouped together, and using in error-handling logic that is invoked when a malformed packet is detected.

[**0085**] This approach of embedding probes within error-handling logic operates much more efficiently than per-packet analysis techniques of the prior art. As discussed above, an external IDS using prior art techniques can easily fall behind because of the processing model used of evaluating all packets against a table of signatures. With the embedded probe approach, there is little additional processing cost since intrusion detection logic operates only when an error (which may signal a potential attack) is detected.

[**0086**] The third of the five previously-discussed limitations of prior art network-based intrusion detection systems, and the third of the five advantages listed above, pertains to providing a real-time response to intrusion detection events on the system that is the target of an attack. An integrated host-based IDS, provided according to the teachings disclosed herein, can implement "prevention" type policies that are executed on the system that is targeted. Examples of actions that may be specified in such policies include discarding the attacking packet before it has a chance to do damage, limiting connections, and denying further packets through the use of "deny" IP filter rules which may be dynamically added in response to a detected attack.

[**0087**] **FIG. 8** shows a traditional network-based IDS. The sequence of steps that may occur during a typical attack in this environment, and the intrusion detection processing of the prior art, comprises:

[**0088**] 1. An attacker launches an attack (see element **801**).

[0089] 2. The attacking packet arrives at the IDS, where the packet is read and queued for IDS evaluation (see element **802**). The attacking packet also continues on its way to the target system.

[0090] 3. The attacking packet arrives at the target system (see element **803**), and normal processing of the packet may begin.

[0091] 4. The IDS performs intrusion detection evaluation of the packet when it reaches the head of the queue, and detects the attack (see element **804**). Note that it is possible that the packet could arrive at the target system, and cause significant damage, before the IDS is able to detect the attack.

[0092] 5. No (or minimal) defensive action occurs at the target system for this attacking packet (see element **805**), due to the detection having occurred elsewhere (and possibly after the damage is already done).

[0093] 6. The network-based IDS generates an alert **806** to an IDS Manager **810**.

[0094] 7. The IDS Manager performs action(s) to prevent future attacks. For example, a notification may be sent **807***a* to the firewall (such as a deny filter rule), and/or a notification may be sent **807***b* to the target system (which might, for example, inform the target system that it should deactivate the local interface that received the attacking packet).

[0095] **FIG. 9** illustrates how, when an intrusion is detected in an integrated target server according to the present invention, defensive actions can be taken directly on the integrated server in real time. (These defensive actions are preferably specified in IDS policy rules/heuristics.) The sequence of steps that may occur during this attack, and the intrusion detection processing of the present invention, comprises:

[0096] 1. The attacker launches an attack (see element **901**).

[0097] 2. The attacking packet arrives at the target system where integrated intrusion detection is running (see element **902**). Note that the packet does not pass through a network-based IDS in this example (although alternatively, it may also be processed by such an IDS which is located in the network path prior to reaching the target system).

[0098] 3. The attack is detected using existing error logic in the integrated IDS, and the IDS policy (or other stored response information) may be immediately consulted to determine how this attack is to be handled (see element **903**).

[0099] 4. Local defensive action is taken on the target system, in real time, to prevent this attack from causing damage (see element **904**). In some cases, depending on the type of attack, it may be possible to also prevent future related attacks.

[0100] 5. The IDS may optionally generate an alert to an IDS Manager (see element **905**).

[0101] 6. The IDS Manager may optionally perform action(s) to prevent future attacks. For example, a notification may be sent **906***a* to the firewall (informing it to drop in a deny filter rule, for example) and/or a notification may be sent **906***b* back to the target system (informing it of suggested actions to take, which might extend beyond those that were defined in the locally-stored policy and that were already carried out in the fourth step).

[0102] Thus, the synchronization that is available between the packet arriving at the server and the detection of the intrusion using the integrated IDS at that server enables real-time reaction, allowing the IDS to take immediate action when the attacking packet arrives on the local target system.

[0103] Embodiments of the present invention provide the fourth of the five advantages listed above, which is to provide for increased sensitivity to potential intrusion events in a manner that does not increase false positive notifications.

[0104] By integrating intrusion detection within the target server, the present invention enables detecting statistical or event anomalies in real time. Furthermore, by exploiting its position in the target server, the integrated IDS can detect attacks that are not detectable by intrusion detection systems that operate within the network. Ready access to stateful data, internal thresholds, and counters (as well as other types of information that are local to the target server) allows the target system to perform this improved, real-time detection in an efficient manner. Because the integrated server IDS has access to data that would be unavailable to an IDS operating within the network, sensitivity to intrusion events can be increased as compared to the prior art without increasing false positive notifications.

[0105] Examples of increased sensitivity to IDS events that is possible with the integrated IDS approach of the present invention include, but are not limited to:

[0106] Determining that certain events can be considered more suspicious (as possible "scan" events, for example) based on connection protocol state violations, presence or absence of a connection, access attempts to a reserved port, or access attempts to unbound ports (that is, access attempts to unavailable services). For example, legitimate users of an application know which ports are valid, and thus an access attempt to a reserved port may indicate an attacker probing the system. An access attempt to an unbound port, on the other hand, might simply happen when the application has failed (or otherwise ended before the client software expected it to). Thus, detecting these access attempts in view of the particular target port number affects whether the attempt is considered normal, possibly suspicious, or very suspicious. The present invention allows specification of a "sensitivity level" and "suspicion level" which will determine whether certain events are counted toward a scan event threshold, based on the circumstances surrounding the event. According to preferred embodiments, normal events will only be counted against the threshold when the sensitivity level is set to high; possibly suspicious events will be counted whenever the sensitivity is high or medium; and very suspicious events will be counted when the sensitivity is high, medium, or low. Normal events are referred to herein as using a low suspicion level, possibly suspicious events use a medium suspicion level, and very suspicious events use a high suspicion level. (This sensitivity/suspicion level concept may also be used with event types other than scan.)

[0107] Detecting a possible UDP flood event, or an application capacity exceeded event, based on the number of backlogged UDP datagrams which are queued for a UDP port exceeding a policy limit for the UDP port.

[0108] Raising flood detection events based on a packet discard rate (based on internal discards). Further statistics on specific discard reasons may also be gathered and used for detecting flood events.

[0109] Using these types of locally-available details in determining whether an attack is indicated enables more accurate determinations, thereby decreasing false positives notifications. Increasing intrusion detection sensitivity without increasing false positives is a noteworthy goal of intrusion detection techniques.

[0110] Preferably, the sensitivity level can be set in a way that allows further narrowing of the field of interest when evaluating attacks; the sensitivity level thus acts as a filter. For example, thresholds may be set for comparing against the "counted" number of events per destination system (e.g. per IP address), protocol (e.g. one threshold for TCP, and/or a threshold for UDP, and so forth), and/or application (e.g. per port number). The sensitivity levels may be used in determining which events "count" for these purposes. The value of the sensitivity level and/or of the limits may be set, for example, using an administrative interface or configuration data from a stored repository. In addition, predefined suspicion levels are preferably associated with packets meeting certain criteria. For example, the suspicion level for certain malformed packets might be set to "high", since certain malformed packets are more indicative of an intrusion than others. (The criteria for a particular suspicion level are not limited to just the actual contents of the packet, but preferably also include the state of the system when the packet is processed and any thresholds reached or state transitions caused by the processing of the packet.) In preferred host-based embodiments, the code which processes a packet after determining that it represents a potential attack is responsible for assigning the proper suspicion level. This code may contain hard-coded assignment(s) of suspicion level(s); alternatively, it may contain reference(s) which obtain the suspicion level(s) from elsewhere (such as from a configuration file). When the analysis is not performed within error-handling logic, then the code performing the analysis may use either of these approaches. In a network device implementation, the suspicion level is preferably specified in the attack signature file. (This latter approach is depicted at elements **1891-1894** of **FIG. 18**, which are described below.)

[0111] The sensitivity level which is in effect at a point in time may be tuned to properly account for performance considerations. For example, if the sensitivity level is set to "high" for TCP and UDP traffic to all ports, then all scanners will be detected as well as potentially many false positives. This may cause traces and logs to fill with records, and considerable resources may be expended in handling the suspected packets. On the other hand, a low sensitivity level for TCP and UDP well-known ports that this system never runs applications on will still detect most scanners with no false positives and will typically not cause many records to be created (unless an attack is actually occurring).

[0112] This sensitivity level/suspicion level technique will be described in more detail below, making reference to examples which are provided in **FIGS. 17 and 18**.

[0113] While the sensitivity level and event suspicion level technique disclosed herein is particularly advantageous when implemented in a target server, as has just been discussed, advantages may also be realized by implementing this processing in a network-based IDS. The sensitivity levels and suspicion levels may be used, in this latter case, in view of the information that is available at the network-based IDS to tune the intrusion detection processing that operates therein.

[0114] Finally, embodiments of the present invention address the fifth of the five previously-discussed limitations of prior art network-based intrusion detection systems, and provide the fifth of the five advantages listed above, by enabling use of generic attack signatures to facilitate detection of new attacks.

[0115] As has been discussed, traditional network-based intrusion detection systems need to match characteristics of individual packets to signatures of known attacks. To avoid false positives, these signatures include characteristics of the attack program that (in many cases) are incidental to the intended result of the attack, and thus the signatures may be rather detailed. It is common practice among the authors of attack programs to make small variations in the program, thereby creating new attacks that will defeat the previously-created attack signature for the earlier version of this program. Until such time as a new attack signature is created and distributed for the new attack variant, that variant is effective against targeted devices in the network.

[0116] The integrated server IDS of the present invention, on the other hand, can take advantage of knowing the result of completing the IDS processing of a given packet in view of the current state of the target system. This allows it to define broad classes of attacks based on the result. As one example of this type of broad class, rather than having a "Ping of Death" packet signature as in the prior art, a policy event can be defined that is to be used for any packet where the offset and data length exceed the maximum allowable packet size. As another example, rather than having signature files for "teardrop" and "teardrop2" and a dozen or more other known attacks, a "malformed packet" policy can be defined that is to be used for any reassembled datagram with invalid protocol header field values. That is, the overlay can be performed, and the resulting packet can be analyzed to see if it has errors. Any combination of fragments that creates a bad packet header may be considered a malformed packet. Therefore, policy can be developed that provides a "malformed packet" class. If packet reassembly creates a malformed packet for any reason, then the policy says that this is very likely a malformed packet attack. (This information may optionally be specified using the suspicion level technique, where the suspicion level might be set to "high" for malformed packets.)

[0117] As new attacks are developed, many of them will likely fall into one of these existing broad classes of attack which have been defined in policy used by the integrated IDS. These new attacks will then be detected and defended against when they first appear, without requiring prior knowledge of the new attack and without waiting for a new signature file to be developed and installed. In this manner,

systems can have increased protection as well as reduced need for frequent signature file updates. Generic attack signatures should also significantly reduce the number and complexity of the required signatures, thereby making the signature comparison process operate much more quickly, which in turn will lead to a more efficient IDS implementation.

[0118] Advantages of this generic attack signature technique may also be realized by implementing this processing in a network-based IDS. Specific attack signatures can be classified and associated with generic attack signatures (i.e. policy). This allows the administrator to more simply and easily specify and change policy for a group of specific attacks, by changing the generic rule (as opposed to changing multiple specific rules). In a network-based approach, the network device can then match incoming packets against specific attack signatures which

[0119] This generic attack signature technique will be described in more detail below, making reference to examples which are provided in **FIG. 19**.

[0120] Reference is now made to the flowcharts in FIGS. **10-14**, which provide logic that may be used to implement preferred embodiments of the present invention.

[0121] **FIG. 10** depicts logic describing how the host-based intrusion detection of the present invention is performed when processing inbound packets that have been encrypted during their transmission through the network. This flowchart corresponds to the first of the five advantages which have been described. As an inbound packet traverses upward through the protocol stack, it enters the IP layer (Block **1000**). Block **1005** checks to see if the IP data in the packet is encrypted; if so, it is decrypted (using prior art techniques) by the IP endpoint at Block **1010**. Block **1015** compares the unencrypted IP packet to the known attack signatures for attacks at the IP layer. In one embodiment, these "known" attack signatures are attack signatures of the type used in prior art systems, where a bit-by-bit comparison is performed to determine whether this packet is a potential attack packet. Alternatively, the attack signatures used in this comparison may comprise the generic signatures of the type discussed above, which are preferably represented as IDS policy information. Or, a combination of these types of processing may be performed. (Similarly, the comparisons in Blocks **1040** and **1065** may use any of these types of processing, although they are described as using simply "signatures".) The IP processing is then completed (using prior art techniques which do not form part of the present invention, and which are therefore not presented in **FIG. 10**), as shown by Block **1020**.

[0122] Having completed IP processing, the packet continues upward through the protocol stack (minus its IP headers), and reaches the TCP/UDP/ICMP or other protocol processing layer (Block **1025**). Block **1030** checks to see if the data for TCP/UDP layer is encrypted. If so, decryption is performed (Block **1035**). Block **1040** compares the unencrypted TCP/UDP packet to the known attack signatures for the TCP/UDP layer. The TCP/UDP processing is then completed, as shown by Block **1020**.

[0123] After the TCP/UDP processing is finished, the packet reaches the application layer (Block **1050**). Again, a test is made to see if the data for this layer is encrypted (Block **1055**), and if so, it is decrypted (Block **1060**). Block **1065** then compares the unencrypted application-layer data to the known attack signatures for the application layer. Block **1070** indicates that the normal application-layer processing for this packet is completed, after which **FIG. 10** is then exited (Block **1075**).

[0124] **FIG. 11** depicts logic describing how the host-based intrusion detection of the present invention is performed by embedding probes within error-handling logic, thereby reducing the overhead of performing intrusion detection. This flowchart corresponds to the second of the five advantages which have been described.

[0125] Normal packet processing logic is entered (Block **1100**), while processing the inbound packet. The test at Block **1105** asks whether an error has been detected with this packet. In one embodiment, this test pertains to prior art errors which are part of existing error handling. (Alternatively, or in addition, this test may also pertain to whether a signature matches the current packet.) If there is no detected error, then control transfers to Block **1125**, which indicates that the packet processing is completed. **FIG. 11** then exits (Block **1130**).

[0126] When some type of error was detected for this packet, processing continues from Block **1105** to Block **1110**, which tests to see if any IDS policy information is available for this error and is "active" (that is, the conditions in the policy rule are met). If so, the action(s) specified in the IDS policy are performed (Block **1115**). In either case, normal error processing is preferably performed for the detected error (Block **1120**), after which the normal packet processing is carried out (as indicated by Block **1125**).

[0127] **FIG. 12** depicts logic describing how the host-based intrusion detection approach of the present invention takes defensive action in real time. This flowchart corresponds to the third of the five advantages which have been described.

[0128] In Block **1200**, the inline packet processing logic is entered as the packet traverses through the stack. Block **1205** tests whether an error has been detected for this packet. As was described above for Block **1105**, this test may pertain to normal error handling and/or signature comparisons.) If there is no detected error, then control transfers to Block **1235**, which indicates that the packet processing is completed. **FIG. 12** then exits (Block **1240**).

[0129] When some type of error was detected for this packet, processing continues from Block **1205** to Block **1210**, which tests to see if any IDS policy information is available and active for this error. If so, then action(s) specified in the IDS policy are performed in real time (Blocks **1215-1225**), and "near" real-time, or deferred, action may also be taken (Blocks **1250-1255**).

[0130] In the case where IDS policy information is available and active, Block **1215** preferably builds an information record for deferred processing. This record preferably comprises information about where the error was detected (in terms of what code was being executed at the time, and/or what state the protocol machine was in), as well as an identifier of the matching policy specification. This record is then enqueued (Block **1220**) for the IDS event handler (such as event agent **480** of **FIG. 4**), and upon reaching the head of the queue, will be processed according to Blocks **1250-**

1255. After enqueuing the record for deferred processing, Block **1225** performs, as a real-time response, the immediate defensive actions specified in the matching IDS policy. For example, the packet might be discarded, the connection request might be disallowed, etc. (Note that the ordering of Blocks **1215-1225** may be changed, if desired, to perform this defensive action before creating the information record.)

[**0131**] Control reaches Block **1230** after the real-time response has been performed, and the deferred action record has been prepared and queued. Block **1230** then performs normal error processing for the detected error, after which the normal packet processing is carried out (as indicated by Block **1235**).

[**0132**] When the information record reaches the head of the IDS event handler's queue, Block **1250** performs the corresponding action(s), which may include dropping a deny filter into the network, deactivating the link on which the packet was received, and so forth. These actions, by virtue of being performed by a queue-oriented event handler, may occur quite soon after an error is detected—even though the packet processing is not tied to these actions as in the case of Block **1225**—and these actions are therefore described as "near" real time or deferred actions. After performing the deferred action(s), the processing for this information record is complete, and the event handler is free to process the next queued event (as indicated by Block **1255**).

[**0133**] **FIG. 13** depicts logic describing how the intrusion detection approach of the present invention may use sensitivity and suspicion levels to decrease false positives. This flowchart corresponds to the fourth of the five advantages which have been described, and as stated earlier, may be used with a network-based solution as well as a host-based solution.

[**0134**] The sensitivity/suspicion level processing of **FIG. 13** begins at Block **1300**, which checks to see if any IDS policy is active for this error or intrusion. (The processing of **FIG. 13** may be performed for non-error cases, and thus this logic may be invoked from "normal" inline processing, in which case the term "intrusion" with reference to **FIG. 13** should be interpreted as a potential intrusion which is under investigation.) If there is no matching policy, then no further sensitivity/suspicion level processing will be performed for this packet; otherwise, processing continues at Block **1305**.

[**0135**] Block **1305** determines the current sensitivity level for error/intrusion processing. Preferably, this sensitivity level is specified as a policy (or configuration) value, as described in more detail below with reference to **FIG. 18**. Block **1310** determines the suspicion level of the current event. As has been stated, this current event includes the packet contents, and may include additional information as well. (In a host-based system, for example, the protocol state may be considered as part of the current event.) Several examples of suspicion level processing will now be discussed in more detail to illustrate how this embodiment of the present invention preferably operates.

[**0136**] As one example, malformed packet attacks have been discussed several times herein. The IP specification defines how a packet should be split up and reassembled when the packet size exceeds the transmission unit size of a particular network link. Many attack programs take advantage of these rules to craft fragments that individually cannot be inspected, or are not obviously invalid, but when reassembled at the target system will cause the stack or application to crash. Many of the attack programs use overlays in the IP and TCP layer headers to achieve this result. Therefore, packets which meet these criteria are deemed "malformed", and are considered a possible intrusion event. The malformed condition of the packet will typically result in performing error-handling logic. Within this error-handling logic, the code may then set an "attack-type" parameter to "malformed packet". This parameter can then be used as a key for searching through the IDS policy repository. (The logic in **FIG. 13** does not show this attack-type parameter being set, and it may be assumed that the parameter is already set upon entering into the logic of **FIG. 13**.)

[**0137**] As another example, the fragmenting of a packet within its first 256 bytes was previously discussed as well. Because this type of fragmentation is so suspicious, detecting this scenario early in the processing of a packet may avoid the need to perform detailed packet analysis that would trigger an error path. Instead, the packet can be immediately flagged as suspicious, and code can be invoked which may set an attack-type parameter to "fragmentation". The logic of **FIG. 13** can then be used to determine how this suspicious packet should be further processed.

[**0138**] In preferred embodiments, the sensitivity level may be one of "low", "medium", and "high", and event suspicion levels of "low suspicion", "medium suspicion", and "high suspicion" are used. In alternative embodiments, more (or fewer) categories may be used. The logic in Blocks **1315-1340** of **FIG. 13** shows how the sensitivity level and suspicion level are used in concert to determine whether the IDS policy action that applies to a particular event should be invoked. Table **1500** of **FIG. 15** presents this information in an alternative compact form.

[**0139**] When the suspicion level of the current event is determined to be low and the sensitivity level for filtering events is set to high, then even low-suspicion events will be "counted" (i.e. processed, according to their corresponding IDS policy specification). This is indicated in **FIG. 13** by following the "Yes" branches from Blocks **1315** and **1320**, and is shown in table **1500** by the intersection **1510** of the "LS" column and the last row. Thus, control reaches Block **1345**, which performs the action of the corresponding IDS policy rule. As stated above, the attack-type parameter is preferably used as the key—or at least one element of the key—that is used to search the policy repository to determine whether any rule or rules match the current event.

[**0140**] The rule which is located in this manner is preferably structured as shown in **FIG. 16**. That is, a particular policy rule **1600** comprises a policy condition part or object **1610** and a policy action part/object **1620**. The relationship between the condition and action objects is an IF-THEN relationship, whereby if the condition is met, then the action is performed. An example policy rule **1630** is shown for illustration. In this example rule **1630**, the condition part **1640** has two elements. The first indicates that this condition is of type "attack", and the second indicates that this rule pertains to attacks categorized as the "malformed" type. The code which processes packets (to determine, inter alia, if an intrusion is underway) is preferably responsible for setting both of these type values, enabling a mapping to the appropriate policy rule. The action part **1650** in this example rule

specifies a number of actions that are to be taken. First, the event action is categorized as being an attack action. Next, a "notification" action has a value of "SYSLOG". This may indicate that a message is to be sent to the system log. A third action sets the logging level parameter to "3", and a fourth action indicates that a "log" action should be performed. These third and fourth actions may indicate an urgency of creating a log message for this event. Finally, a fifth action is "limit", which may indicate that the currently-processed packet is to be immediately discarded. (As will be obvious, the syntax used in rule **1630** is merely illustrative, but serves to illustrate how policy rules are structured, how they may be matched to variable settings that are created when processing packets/events, and how the actions can be specified.).

[**0141**] Returning now to the discussion of **FIGS. 13 and 15**, if the current event has a suspicion level of medium (Block **1325**) and the sensitivity level is set to high or medium (i.e. greater than or equal to medium), as shown by Block **1330**, then this event will be counted and its policy rule will be processed (Block **1345**). Taking the "Yes" branches from Blocks **1325** and **1330** corresponds to the cells **1520** in table **1500** of **FIG. 15**.

[**0142**] Finally, if the current event has a high suspicion level (Block **1335**), and if the sensitivity level is set to high or medium or low (i.e. greater than or equal to low), as shown by Block **1340**, then this event will be counted and its policy rule will be processed (Block **1345**). Taking the "Yes" branches from Blocks **1335** and **1340** corresponds to the cells **1530** in **FIG. 15**.

[**0143**] If the combination of suspicion level and sensitivity level does not follow the "Yes" paths in **FIG. 13** (and therefore corresponds to an empty cell in table **1500**), then no further processing of this event will be performed in **FIG. 13**. Control will transfer to Block **1350**, from which **FIG. 13** exits.

[**0144**] **FIG. 17** illustrates sample suspicion level settings that may be used to classify events for detecting a TCP port scan. In this illustration, information about the current packet (column **1720**) in combination with the current socket state (column **1710**) is used to determine the event suspicion level (column **1730**). For example, if unexpected flags are received at any time, this should be considered a very suspicious event which has a high suspicion level (see row **1740**), whereas encountering a sequence number out of the sequence number window should be considered a normal event which has a low suspicion level (see row **1750**). (Event classification column **1730** has been augmented with explanatory information, for purposes of better explaining the example.)

[**0145**] The port scan information in table **1700** is preferably used only in a host-based system, as it requires information about the current protocol state. A network-based system may use other types of information (or perhaps just information of the type shown in Event column **1720**) to determine suspicion levels.

[**0146**] The diagram in **FIG. 18** shows the correlation between probes executing in the protocol stack **1850** and policy rules **1810**, **1820** which are stored in a policy repository **1800**. For example, a probe **1860** in the TCP/UDP layer may include code that sets the ConditionType parameter to "attack" and the AttackType parameter to "malformed", and determines that the current event is very suspicious (i.e. has a high suspicion level). The condition part of rule **1810** matches these ConditionType and AttackType parameter settings, and the action part of the rule indicates that a low sensitivity level is in use. (Alternatively, the sensitivity level setting might be included within the condition part of the rule.) By referring to table **1500** (or, equivalently, Blocks **1335** and **1340** of **FIG. 13**), it can be seen that the combination of a "high suspicion" event and a "low" sensitivity level will cause this event to trigger its corresponding policy rule. The arrow extending from probe **1860** to rule **1810** is intended to illustrate the correlation between the rule and the probe.

[**0147**] The probe **1870** in this example is depicted as also setting the ConditionType parameter to "attack" and the AttackType parameter to "malformed", but suppose probe **1870** determines that the event suspicion is medium. In this case, rule **1810** will not be triggered; even though the rule's conditions are met, the sensitivity level for this rule requires a higher event suspicion level. The "X" on the arrow extending from probe **1870** to rule **1810** is intended to illustrate that the rule is not applicable for this probe.

[**0148**] The final correlation shown in **FIG. 18** is between probe **1880** and rule **1820**. Probe **1880** presumably sets the ConditionType parameter to "attack" and the AttackType parameter to "fragment", and determines that the current event is of medium suspicion. Because the condition part of rule **1820** is matched in this example and the rule specifies that it applies for the medium sensitivity level, and table **1500** indicates that the event therefore counts, an arrow is shown extending from probe **1880** to rule **1820**.

[**0149**] By specifying sensitivity levels in each rule, as shown in **FIG. 18, a** fine-grained approach to filtering events can be achieved. (Alternatively, a system-wide sensitivity level might be used to provide a coarse-grained filtering; in this case, individual sensitivity levels are not required.)

[**0150**] As illustrated at **1890** in **FIG. 18**, the sensitivity/suspicion level technique can be applied in an implementation that maps the prior art detailed, attack-specific signatures from a signature file to the IDS policy (i.e. the rules in policy repository **1800**) which is described herein. (This approach is beneficial in a network-based IDS solution.) As shown at **1891**, a packet having all code bits set may be considered a malformed packet attack which has a high suspicion level (as indicated by the syntax elements "<malformed>" and "<HS>"). The signature at **1892**, applying to packets having the SYN or FIN bits set along with a source port number of "0", is also considered a malformed packet attack which has a high suspicion level. Signatures **1893** and **1894** specify that packets having the Urgent bit set or having a total packet size of less than 256 bytes are considered a malformed packet attack with low suspicion or a fragment attack with medium suspicion, respectively. These attack signatures **1891-1894** may be used to access an IDS policy repository (such as repository **1800**) to determine how the analyzed packet should be handled. For example, the "malformed" and "HS" values may be used as keys to search through the rules in the policy repository, and the action part of such rules may then be invoked when a matching rule (or rules) is found. (Additional values might be specified for this purpose as well, such as the attack type that appears in the condition part of rules **1810** and **1820**.)

[0151] It should be noted that the suspicion level/sensitivity level technique does not require use of rules in a policy repository. In alternative embodiments, other data structures or representation formats may be used for specifying how to map between the suspicion level for a particular event and a sensitivity/filtering level (as well as what action should be taken when a match is detected).

[0152] Returning now to the flowcharts, **FIG. 14** depicts logic describing how generic signatures may be processed by an embodiment of the present invention to detect attacks without the bit-by-bit comparison approach used for prior art attack signatures. This flowchart corresponds to the fifth of the five advantages which have been described. This logic is preferably placed within the error handling logic. (Alternatively, the logic shown in **FIG. 14** may be adapted for use within the normal inline packet processing flow. It will be obvious how this adaptation may be made, once the teachings of the present invention are known.) This technique may be used with a network-based solution as well as a host-based solution, as stated above.

[0153] Block **1400** tests to see if an error has been detected. If not, then control transfers to Block **1430**, which indicates that the packet processing will be completed, and the logic of **FIG. 14** will then be exited (Block **1435**).

[0154] When an error has been detected, Block **1405** classifies the error by an intrusion detection class. Preferably, this comprises inline identification of the intrusion detection class based on knowledge of the error that was detected by the normal error handling. (Note that it is not necessary to precisely identify the attack at this point; the identification can occur later, as in the post-processing logic of Blocks **1450-1485**.) The test in Block **1410** then checks to see if IDS policy for this class of intrusion is active. If so, then the policy is used in Blocks **1415-1420**, and in either case, Block **1425** then performs normal error processing for the detected error.

[0155] Block **1415** establishes values that may be used for later analysis of the detected error, such as when processing a trace file to analyze patterns of behavior surrounding an attempted attack. A "probe identifier" is created, along with a "correlator". Preferably, the probe identifier ("ID") indicates where in the executing code the attack was detected. Information about the type of error might also be included. The correlator is preferably used as an identifier within a trace file to enable correlating multiple trace records that are related. (For example, if multiple attack attempts are in progress at a given time, but a single trace file is being used to record information about the attacking packet flows, then the records for each separate attack preferably use an identical correlator value. This enables those records to be extracted from the trace file during analysis.) Block **1420** then performs the action(s) indicated for this attack by the matching IDS policy that was located in Block **1410**. If one of the indicated actions is to write an informational record (into a trace, a log file, or onto a console), then the values created in Block **1415** are preferably included in that written information along with a copy of the attacking packet or a correlator which references a trace/log record that contains the copy of the attacking packet.

[0156] The right-hand column of **FIG. 14** presents actions that may be taken when post-processing an IDS log and/or trace, as indicated in Block **1450**. Block **1455** checks to see if the probe ID and intrusion class from the current record of the log/trace are sufficient to identify a specific attack. If so, then control transfers to Block **1480**, where this specific attack is dealt with. Otherwise, Block **1460** extracts information from the packet data in the current record, and Block **1465** may compare this packet data to signatures as in the prior art in an attempt to identify the attack. Alternatively, this comparison may be made using generic attack signatures of the type disclosed herein. Block **1470** asks whether the packet matches an existing attack signature. If so, control transfers to Block **1480**. Otherwise, Block **1475** creates a general classification record containing information such as the intrusion class and subclass of the intrusion event (such as "attack, malformed" or "attack, fragmentation"). Block **1480** creates a specific record for analysis, setting out the particular attack which was detected. As shown in **FIG. 14**, control then returns to Block **1475** for creation of a general record in addition to the specific record created by Block **1480**. (Optionally, the processing of Block **1475** may be bypassed when Block **1480** has been executed.) After the general/specific record is created, the post-processing logic of **FIG. 14** exits (Block **1485**).

[0157] Referring now to **FIG. 19, a** diagram is provided to illustrate how generic attack signatures processed by probes in an integrated host-based IDS **1950** may correlate to IDS policy rules **1910**, **1920**, and also how a network-based IDS **1990** can map detailed, attack-specific signatures (from a signature file **1995**) to the IDS policy in repository **1900**. As in the examples of **FIG. 18**, two probes **1960**, **1970** are shown as having classified events as having ConditionType "attack" and AttackType "malformed", and another probe **1980** is shown as having classified an event as having ConditionType "attack" and AttackType "fragment". Thus, the broad classification of events into attack classes enables locating a rule or rules which may contain very detailed processing to handle the current event, where this locating process operates much more efficiently than prior art techniques.

[0158] Note that the rules **1910**, **1920** do not use sensitivity levels in this example, and the mappings **1991-1994** between specific attack signatures and attack classes (shown as "malformed" or "fragment" in these examples) also do not use sensitivity levels. This illustrates that the generic attack signature technique disclosed herein may be implemented independently of the sensitivity/suspicion level technique.

[0159] In summary, the present invention provides a number of improvements for intrusion detection processing. A number of advantages of the disclosed approach have been described, and these advantages have been discussed in view of limitations of prior art implementations which use network-based intrusion detection. Prior art IDS components operating within the network itself, rather than in the target system as disclosed herein, do not have benefit of the target system's protocol machine, and thus do not offer the advantages of those embodiments of the present invention which operate in a host-based solution (e.g. reduced overhead for error detection by using probes within the error-handling logic, and the advantages which are inherent with performing IDS in the endpoint). Techniques were also disclosed which operate advantageously within both host-based solutions and network-based solutions (i.e. the sensitivity level/suspicion level processing and the generic attack signature

processing). When the IDS function is provided within the server endpoint system, according to the present invention, the system can participate in an "untrusted" environment (e.g. an environment which is not also protected by other IDS components) with greater confidence and with greater protection than those servers that do not have this capability.

[0160] As will be appreciated by one of skill in the art, embodiments of the present invention may be provided as methods, systems, or computer program products. Accordingly, the present invention may take the form of an entirely hardware embodiment, an entirely software embodiment, or an embodiment combining software and hardware aspects. Furthermore, the present invention may take the form of a computer program product which is embodied on one or more computer-usable storage media (including, but not limited to, disk storage, CD-ROM, optical storage, and so forth) having computer-usable program code embodied therein.

[0161] The present invention has been described with reference to flow diagrams and/or block diagrams of methods, apparatus (systems), and computer program products according to embodiments of the invention. It will be understood that each flow and/or block of the flow diagrams and/or block diagrams, and combinations of flows and/or blocks in the flow diagrams and/or block diagrams, can be implemented by computer program instructions. These computer program instructions may be provided to a processor of a general purpose computer, special purpose computer, embedded processor or other programmable data processing apparatus to produce a machine, such that the instructions, which execute via the processor of the computer or other programmable data processing apparatus, create means for implementing the functions specified in the flow diagram flow or flows and/or block diagram block or blocks.

[0162] These computer program instructions may also be stored in a computer-readable memory that can direct a computer or other programmable data processing apparatus to function in a particular manner, such that the instructions stored in the computer-readable memory produce an article of manufacture including instruction means which implement the function specified in the flow diagram flow or flows and/or block diagram block or blocks.

[0163] The computer program instructions may also be loaded onto a computer or other programmable data processing apparatus to cause a series of operational steps to be performed on the computer or other programmable apparatus to produce a computer implemented process such that the instructions which execute on the computer or other programmable apparatus provide steps for implementing the functions specified in the flow diagram flow or flows and/or block diagram block or blocks.

[0164] While preferred embodiments of the present invention have been described, additional variations and modifications may occur to those skilled in the art once they learn of the basic inventive concepts. Therefore, it is intended that the appended claims shall be construed to include the preferred embodiments and all such variations and modifications as fall within the spirit and scope of the invention.

What is claimed:

1. A method of improving intrusion detection in a computing network, comprising steps of:

defining intrusion suspicion levels for inbound communications destined for a computing device on the computing network; and

using the defined intrusion suspicion levels to determine if a particular inbound communication destined for the computing device should be treated as an intrusion event.

2. The method according to claim 1, further comprising steps of:

defining a sensitivity level for filtering intrusion events; and

determining the intrusion suspicion level of the particular inbound communication;

wherein the using step compares the sensitivity level to the determined intrusion suspicion level.

3. The method according to claim 2, wherein the determining step further comprises comparing conditions in the computing device to predetermined conditions which signal a potential intrusion.

4. The method according to claim 3, wherein the conditions in the computing device comprise contents of the particular inbound communication.

5. The method according to claim 4, wherein the conditions in the computing device further comprise a protocol state of a protocol stack which processes the particular inbound communication.

6. The method according to claim 1, further comprising the step of taking one or more defensive actions when the using step determines that the particular inbound communication should be treated as an intrusion event.

7. The method according to claim 6, wherein the defensive actions are determined by consulting intrusion detection policy information.

8. The method according to claim 6, wherein the intrusion detection policy information is stored in a network-accessible repository.

9. The method according to claim 1, wherein the using step further comprises comparing the particular inbound communication to one or more attack signatures.

10. The method according to claim 9, wherein at least one of the attack signatures is a class signature representing a class of attacks.

11. The method according to claim 9, wherein the attack signatures are specified as conditions in intrusion detection rules, and wherein each of the intrusion detection rules further comprises one or more actions that are to be taken when the using step determines that the particular inbound communication should be treated as an intrusion event.

12. The method according to claim 1, wherein the using step operates in the computing device for which the particular inbound communication is destined.

13. The method according to claim 12, wherein the using step operates within layer-specific intrusion detection logic executing in a protocol stack running on the computing device.

14. The method according to claim 1, wherein the using step operates in a network device which analyzes communications directed to the computing device for which the particular inbound communication is destined.

15. The method according to claim 1, further comprising steps of:

for each of a plurality of potential intrusion events, defining a set of one or more conditions which describe the potential intrusion event;

associating a sensitivity level with each of the sets of conditions; and

determining a suspicion level of the particular inbound communication;

wherein the using step determines that the particular inbound communication should be treated as an intrusion event when conditions pertaining to the particular inbound communication match a selected one of the sets of conditions and the determined suspicion level maps to the sensitivity level associated with the selected set of conditions.

16. A method for improving intrusion detection in a computing network, comprising steps of:

classifying an inbound communication destined for a computing device on the computing network as to an intrusion class which is applicable to the inbound communication; and

determining whether the applicable intrusion class has one or more associated intrusion detection policy specifications, and if so, performing actions specified in the one or more associated intrusion detection policy specifications.

17. The method according to claim 16, wherein the actions include writing a record describing the inbound communication to a file, wherein the record includes the applicable intrusion class.

18. The method according to claim 17, wherein the record includes an identification of a code element where the inbound communication was processed.

19. The method according to claim 18, further comprising the step of:

determining, for each of the records of the file, whether the intrusion class and identification of the code element identify a specific attack, and if so, creating an analysis record for the identified specific attack.

20. The method according to claim 18, further comprising the step of:

determining, for each of the records of the file, whether the intrusion class and identification of the code element identify a specific attack, and if not, performing steps of:

locating packet data pertaining to the record;

comparing the located packet data to attack signatures; and

if a matching attack signature is located by the comparing step, creating an analysis record for a specific attack which corresponds to the matching attack signature, and otherwise creating an analysis record for the intrusion class.

21. The method according to claim 16, wherein the classifying step further comprises locating an attack signature which matches the inbound communication, and the determining step further comprises using one or more keywords which are associated with the located attack signature to retrieve the associated intrusion detection policy specifications.

22. A system for improving intrusion detection in a computing network, comprising:

means for defining intrusion suspicion levels for inbound communications destined for a computing device on the computing network; and

means for using the defined intrusion suspicion levels to determine if a particular inbound communication destined for the computing device should be treated as an intrusion event.

23. The system according to claim 22, further comprising:

means for defining a sensitivity level for filtering intrusion events; and

means for determining the intrusion suspicion level of the particular inbound communication;

wherein the means for using the defined intrusion further comprises means for comparing the sensitivity level to the determined intrusion suspicion level.

24. The system according to claim 23, wherein the means for determining further comprises means for comparing conditions in the computing device to predetermined conditions which signal a potential intrusion.

25. The system according to claim 22, further comprising means for taking one or more defensive actions when the means for using determines that the particular inbound communication should be treated as an intrusion event, wherein the defensive actions are determined by consulting intrusion detection policy information.

26. The system according to claim 22, wherein the means for using further comprises means for comparing the particular inbound communication to one or more attack signatures, wherein the attack signatures are specified as conditions in intrusion detection rules, and wherein each of the intrusion detection rules further comprises one or more actions that are to be taken when the means for using determines that the particular inbound communication should be treated as an intrusion event.

27. The system according to claim 22, further comprising:

for each of a plurality of potential intrusion events, means for defining a set of one or more conditions which describe the potential intrusion event;

means for associating a sensitivity level with each of the sets of conditions; and

means for determining a suspicion level of the particular inbound communication;

wherein the means for using determines that the particular inbound communication should be treated as an intrusion event when conditions pertaining to the particular inbound communication match a selected one of the sets of conditions and the determined suspicion level maps to the sensitivity level associated with the selected set of conditions.

28. A system for improving intrusion detection in a computing network, comprising:

means for classifying an inbound communication destined for a computing device on the computing network as to an intrusion class which is applicable to the inbound communication; and

means for determining whether the applicable intrusion class has one or more associated intrusion detection

policy specifications, and if so, performing actions specified in the one or more associated intrusion detection policy specifications.

29. The system according to claim 28, wherein the actions include writing a record describing the inbound communication to a file, wherein the record includes the applicable intrusion class and an identification of a code element where the inbound communication was processed.

30. The system according to claim 29, further comprising:

means for determining, for each of the records of the file, whether the intrusion class and identification of the code element identify a specific attack, and if so, creating an analysis record for the identified specific attack, and if not, means for:

locating packet data pertaining to the record;

comparing the located packet data to attack signatures; and

if a matching attack signature is located by the means for comparing, creating an analysis record for a specific attack which corresponds to the matching attack signature, and otherwise creating an analysis record for the intrusion class.

31. The system according to claim 28, wherein the means for classifying further comprises means for locating an attack signature which matches the inbound communication, and the means for determining further comprises means for using one or more keywords which are associated with the located attack signature to retrieve the associated intrusion detection policy specifications.

32. A computer program product for improving intrusion detection in a computing network, the computer program product embodied on one or more computer-readable media and comprising:

computer-readable program code means for defining intrusion suspicion levels for inbound communications destined for a computing device on the computing network; and

computer-readable program code means for using the defined intrusion suspicion levels to determine if a particular inbound communication destined for the computing device should be treated as an intrusion event.

33. The computer program product according to claim 32, further comprising:

computer-readable program code means for defining a sensitivity level for filtering intrusion events; and

computer-readable program code means for determining the intrusion suspicion level of the particular inbound communication;

wherein the computer-readable program code means for using compares the sensitivity level to the determined intrusion suspicion level.

34. The computer program product according to claim 33, wherein the computer-readable program code means for determining further comprises computer-readable program code means for comparing conditions in the computing device to predetermined conditions which signal a potential intrusion, the conditions in the computing device comprising contents of the particular inbound communication.

35. The computer program product according to claim 33, wherein the computer-readable program code means for determining further comprises computer-readable program code means for comparing conditions in the computing device to predetermined conditions which signal a potential intrusion, the conditions in the computing device comprising contents of the particular inbound communication and a protocol state of a protocol stack which processes the particular inbound communication.

36. The computer program product according to claim 32, further comprising computer-readable program code means for taking one or more defensive actions when the computer-readable program code means for using determines that the particular in bound communication should be treated as an intrusion event, wherein the defensive actions are determined by consulting intrusion detection policy information stored in a policy repository.

37. The computer program product according to claim 1, wherein the computer-readable program code means for using further comprises computer-readable program code means for comparing the particular inbound communication to one or more attack signatures, wherein at least one of the attack signatures is a class signature representing a class of attacks.

38. The computer program product according to claim 32, wherein the computer-readable program code means for using operates in the computing device for which the particular inbound communication is destined.

39. The computer program product according to claim 32, wherein the computer-readable program code means for using operates in a network device which analyzes communications directed to the computing device for which the particular inbound communication is destined.

40. The computer program product according to claim 32, further comprising:

computer-readable program code means for specifying, for each of a plurality of potential intrusion events, a set of one or more conditions which describe the potential intrusion event;

computer-readable program code means for associating a sensitivity level with each of the sets of conditions; and

computer-readable program code means for determining a suspicion level of the particular inbound communication;

wherein the computer-readable program code means for using determines that the particular inbound communication should be treated as an intrusion event when conditions pertaining to the particular inbound communication match a selected one of the sets of conditions and the determined suspicion level maps to the sensitivity level associated with the selected set of conditions.

41. A computer program product for improving intrusion detection in a computing network, the computer program product embodied on one or more computer-readable media and comprising:

computer-readable program code means for classifying an inbound communication destined for a computing device on the computing network as to an intrusion class which is applicable to the inbound communication; and

computer-readable program code means for determining whether the applicable intrusion class has one or more associated intrusion detection policy specifications, and if so, performing actions specified in the one or more associated intrusion detection policy specifications.

42. The computer program product according to claim 41, wherein the actions include writing a record describing the inbound communication to a file, wherein the record includes the applicable intrusion class and an identification of a code element where the inbound communication was processed.

43. The computer program product according to claim 42, further comprising:

computer-readable program code means for determining, for each of the records of the file, whether the intrusion class and identification of the code element identify a specific attack, and if so, computer-readable program code means for creating an analysis record for the identified specific attack, and if not, computer-readable program code means for:

locating packet data pertaining to the record;

comparing the located packet data to attack signatures; and

if a matching attack signature is located by the computer-readable program code means for comparing, creating an analysis record for a specific attack which corresponds to the matching attack signature, and otherwise creating an analysis record for the intrusion class.

44. The computer program product according to claim 41, wherein the computer-readable program code means for classifying further comprises computer-readable program code means for locating an attack signature which matches the inbound communication, and the computer-readable program code means for determining further comprises computer-readable program code means for using one or more keywords which are associated with the located attack signature to retrieve the associated intrusion detection policy specifications.

* * * * *