US008591057B2

(12) **United States Patent**
Kawabata et al.

(10) **Patent No.: US 8,591,057 B2**
(45) **Date of Patent: Nov. 26, 2013**

(54) **LED LAMP**

(75) Inventors: **Yusaku Kawabata**, Kyoto (JP); **Hiroshi Fukumoto**, Kyoto (JP); **Takao Iemoto**, Kyoto (JP); **Toshio Watanabe**, Kyoto (JP); **Hideharu Osawa**, Kyoto (JP); **Hiroyuki Fukui**, Kyoto (JP); **Hirotaka Shimizu**, Kyoto (JP)

(73) Assignee: **Rohm Co., Ltd.**, Kyoto (JP)

(*) Notice: Subject to any disclaimer, the term of this patent is extended or adjusted under 35 U.S.C. 154(b) by 251 days.

(21) Appl. No.: **13/129,746**

(22) PCT Filed: **Nov. 19, 2009**

(86) PCT No.: **PCT/JP2009/069602**

§ 371 (c)(1),
(2), (4) Date: **May 17, 2011**

(87) PCT Pub. No.: **WO2010/058808**

PCT Pub. Date: **May 27, 2010**

(65) **Prior Publication Data**

US 2011/0228517 A1 Sep. 22, 2011

(30) **Foreign Application Priority Data**

Nov. 19, 2008	(JP)	2008-295112
Nov. 19, 2008	(JP)	2008-295113
Nov. 19, 2008	(JP)	2008-295114
Nov. 25, 2008	(JP)	2008-299254
Nov. 25, 2008	(JP)	2008-299255
Dec. 1, 2008	(JP)	2008-306194
Dec. 1, 2008	(JP)	2008-306196
Dec. 15, 2008	(JP)	2008-318079

(51) **Int. Cl.**

F21V 9/16	(2006.01)
F21V 3/02	(2006.01)
F21V 8/00	(2006.01)
F21S 4/00	(2006.01)

(52) **U.S. Cl.**
USPC **362/217.02**; 362/218; 362/223; 362/230; 362/260; 362/311.1; 362/311.02; 362/311.14; 362/555; 362/580

(58) **Field of Classification Search**
USPC 362/235–237, 249.02, 84, 217.02, 218, 362/223, 224, 230, 260, 311.02, 311.1, 362/311.14, 294, 551, 555, 580
See application file for complete search history.

(56) **References Cited**

U.S. PATENT DOCUMENTS

6,158,882	A *	12/2000	Bischoff, Jr.	362/488
6,561,690	B2 *	5/2003	Balestriero et al.	362/555
6,592,238	B2	7/2003	Cleaver et al.	
7,011,421	B2 *	3/2006	Hulse et al.	362/84

(Continued)

FOREIGN PATENT DOCUMENTS

CN	101173758	5/2008
CN	201133613	10/2008

(Continued)

OTHER PUBLICATIONS

English machine-translation of Fuminari (JP 2005-208412) Apr. 8, 2005.*

Primary Examiner — Alan Cariaso
(74) *Attorney, Agent, or Firm* — Hamre, Schumann, Mueller & Larson, P.C.

(57) **ABSTRACT**

An LED lamp **A1** includes a plurality of LED modules **1** and a substrate **2** on which the LED modules **1** are mounted in a row. A light guide **3** covering the LED modules **1** is provided on the substrate **2**. The light guide **3** is held in close contact with each of the LED modules. With this arrangement, a proper amount of light is obtained with the use of a smaller number of LED modules **1** or with less power consumption.

7 Claims, 30 Drawing Sheets

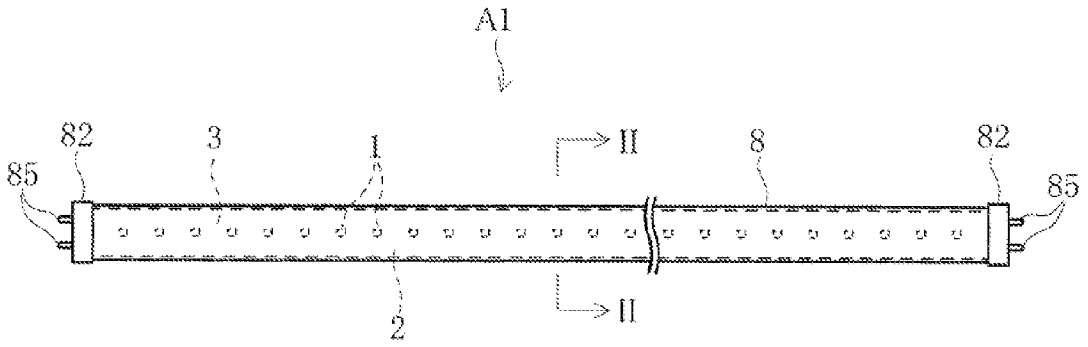

(56) **References Cited**

U.S. PATENT DOCUMENTS

7,159,997	B2 *	1/2007	Reo et al.	362/240
7,234,844	B2 *	6/2007	Bolta et al.	362/294
7,871,181	B2	1/2011	Fan	

FOREIGN PATENT DOCUMENTS

CN	201141553	10/2008
JP	6-54103	7/1994
JP	2004-30929	1/2004
JP	2004-526185	8/2004
JP	2005-19260	1/2005
JP	2005-208412	8/2005
JP	2005-529457	9/2005
JP	3142719	6/2008
JP	2008-192353	8/2008
JP	2008-541388	11/2008
WO	WO 03/104712	12/2003

* cited by examiner

FIG.1

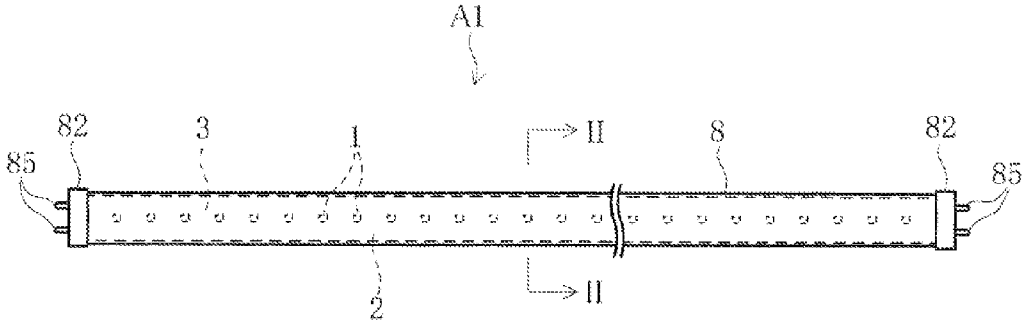

FIG.2

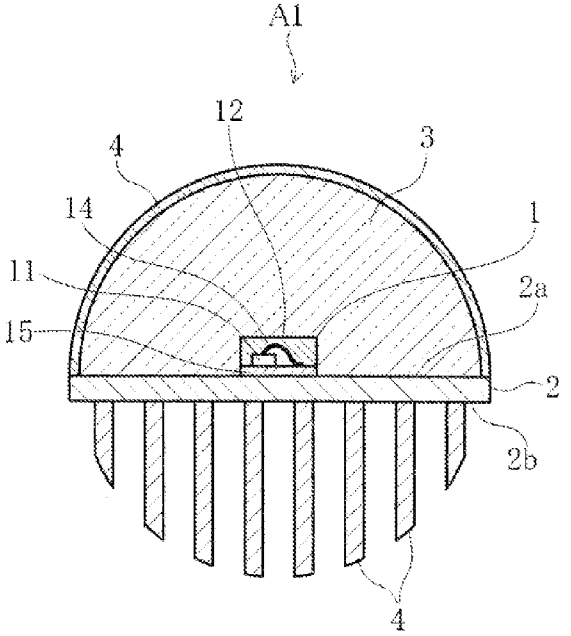

FIG.3

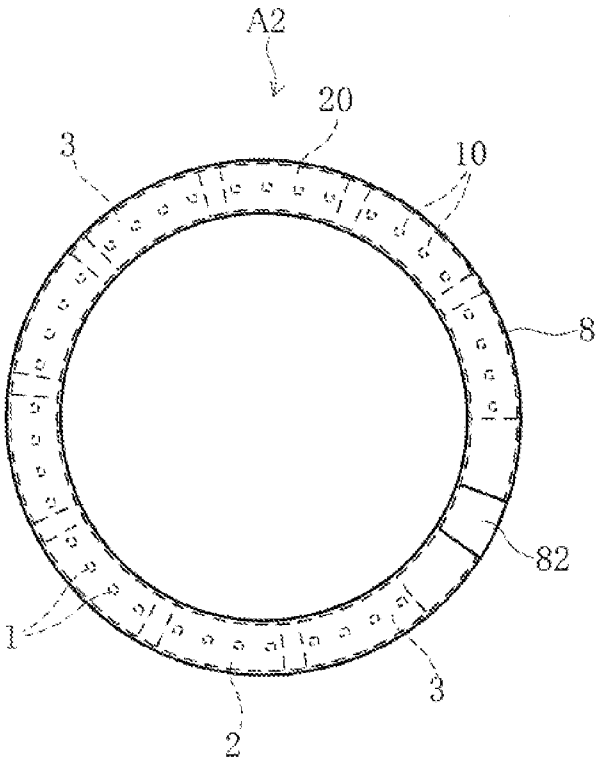

FIG.4

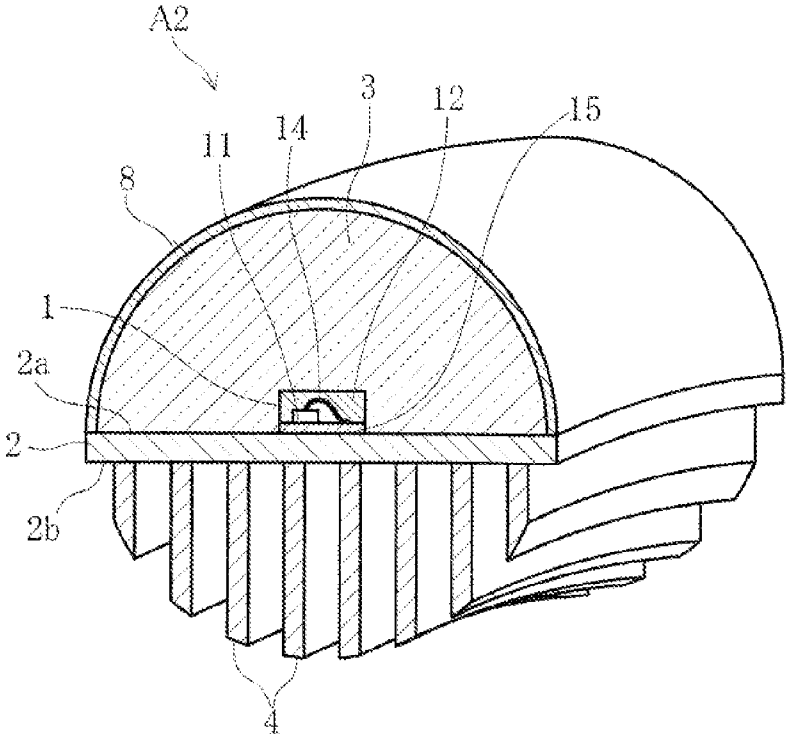

FIG.5

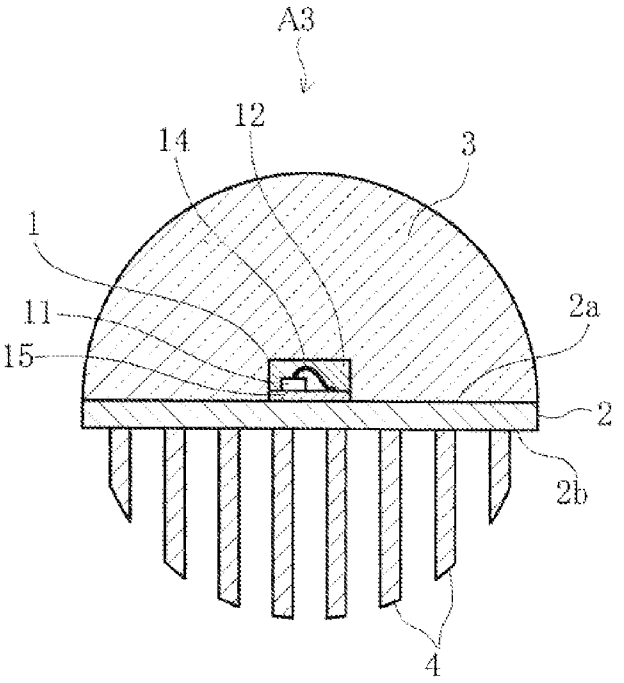

FIG.6

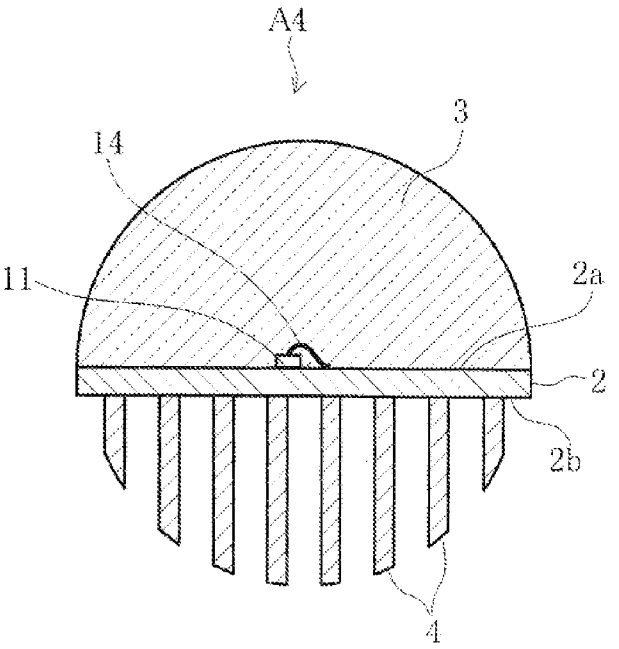

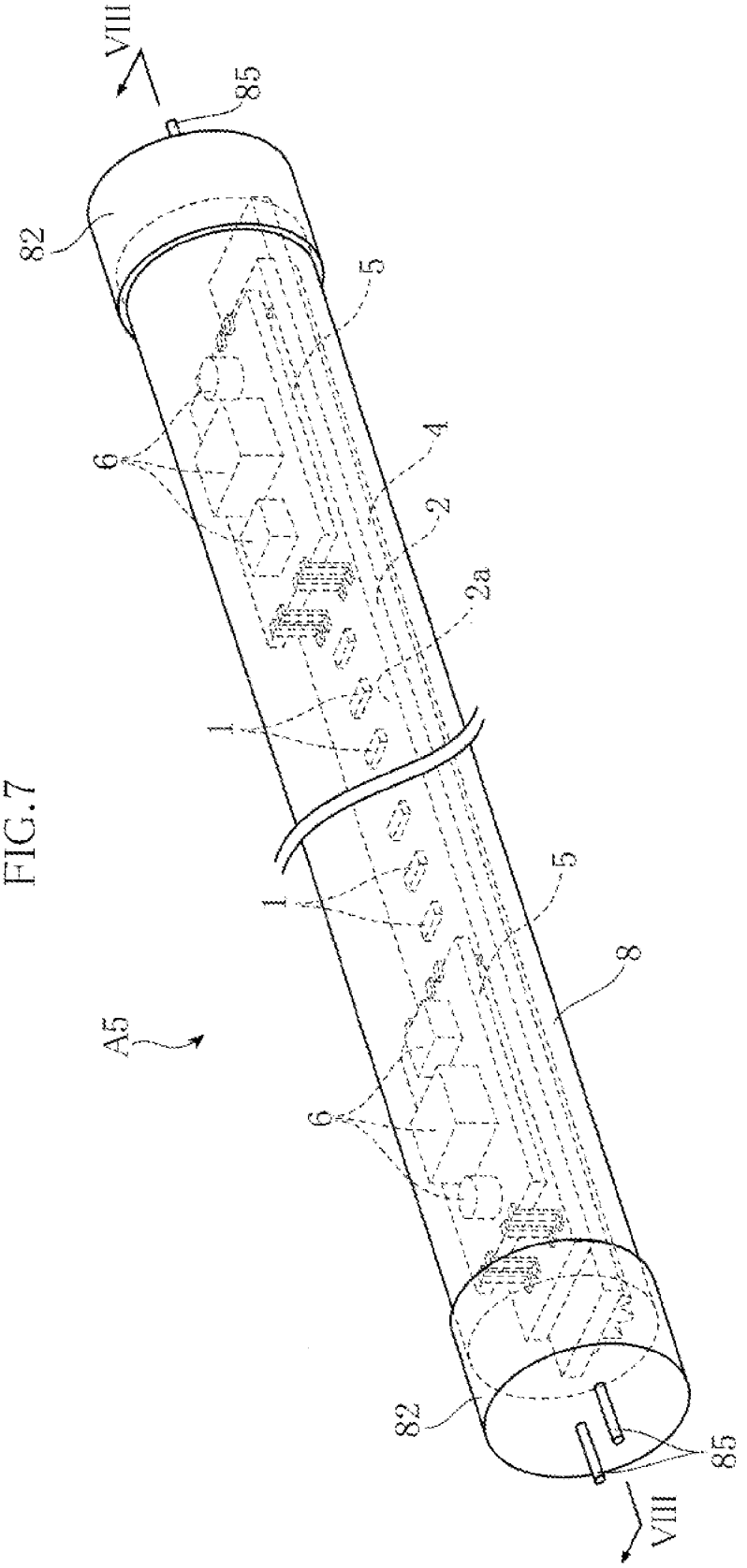

FIG.7

FIG.8

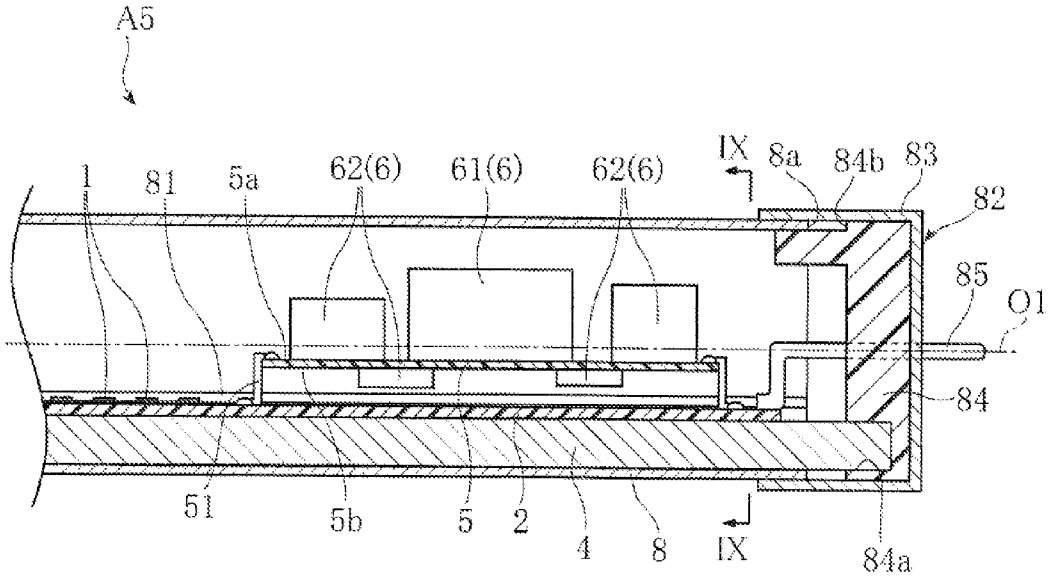

FIG.9

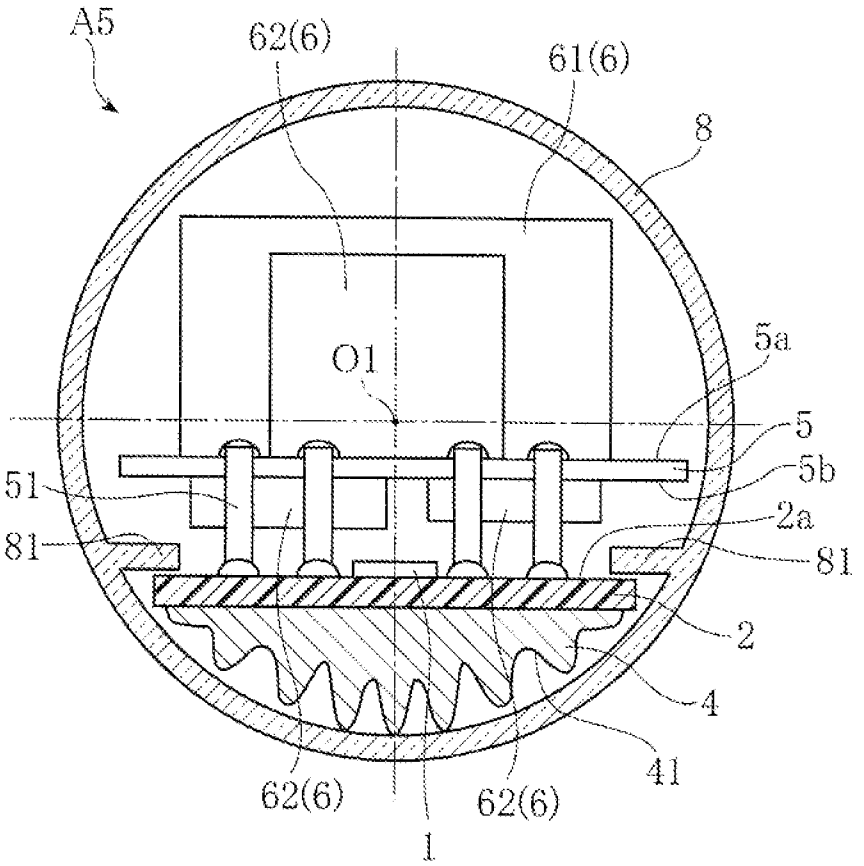

FIG.10

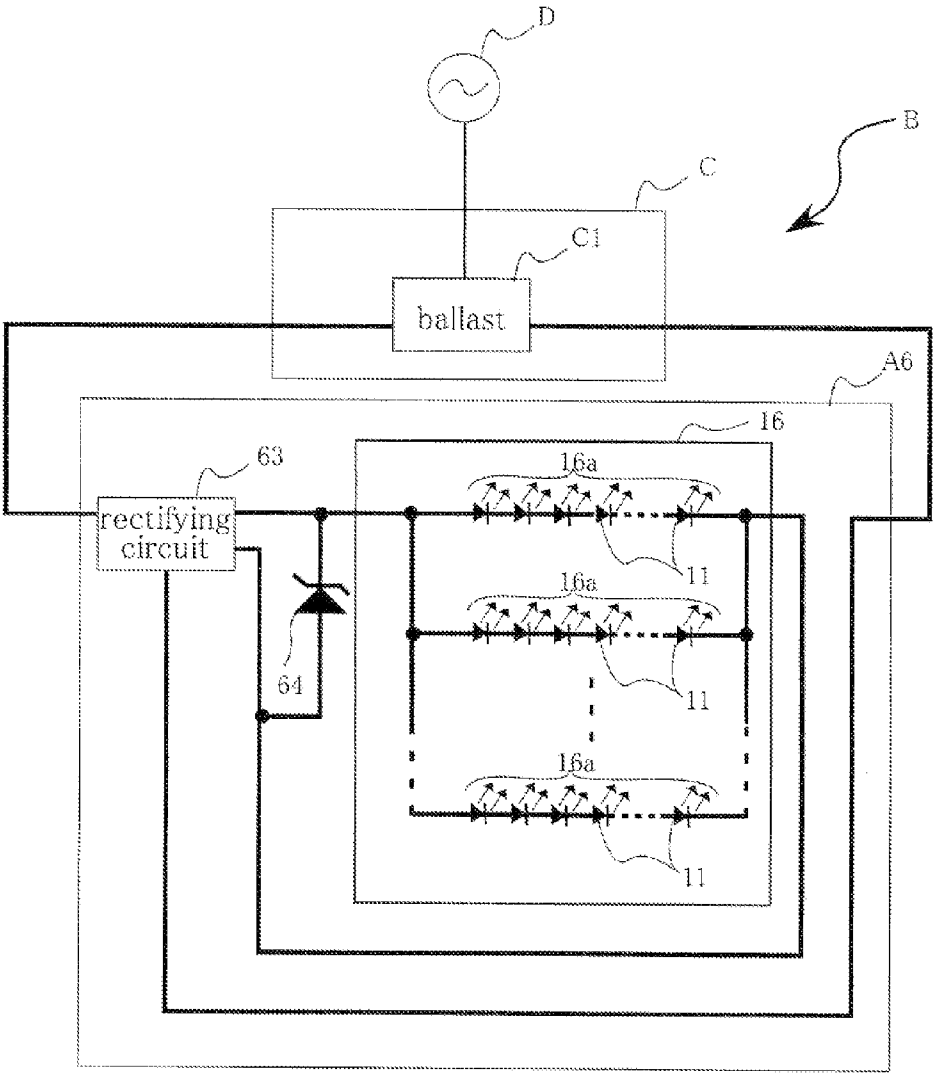
D
B
C
C1
ballast
A6
16
63
16a
rectifying circuit
11
16a
64
11
16a
11

FIG.11

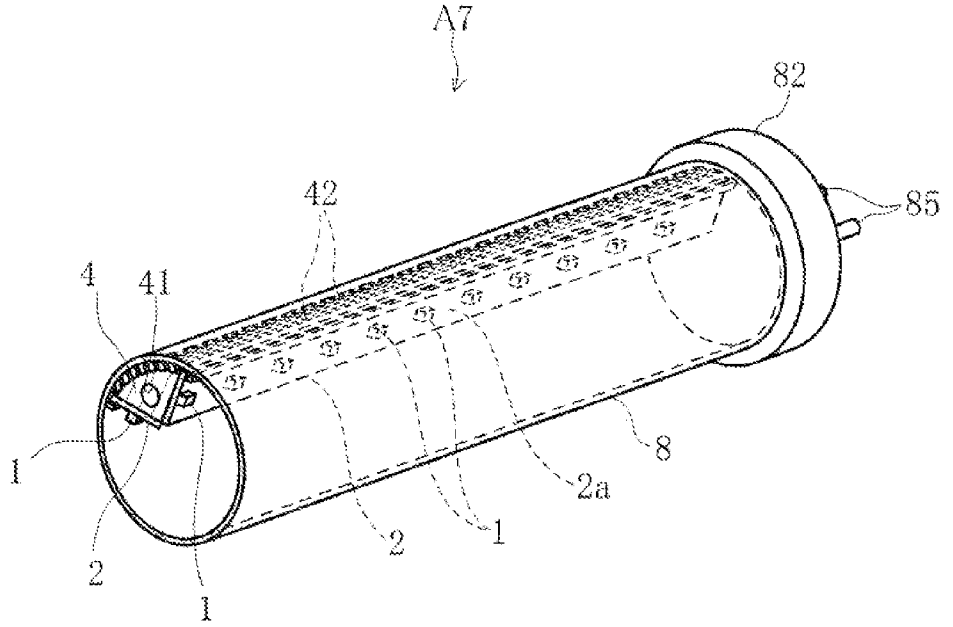

FIG.12

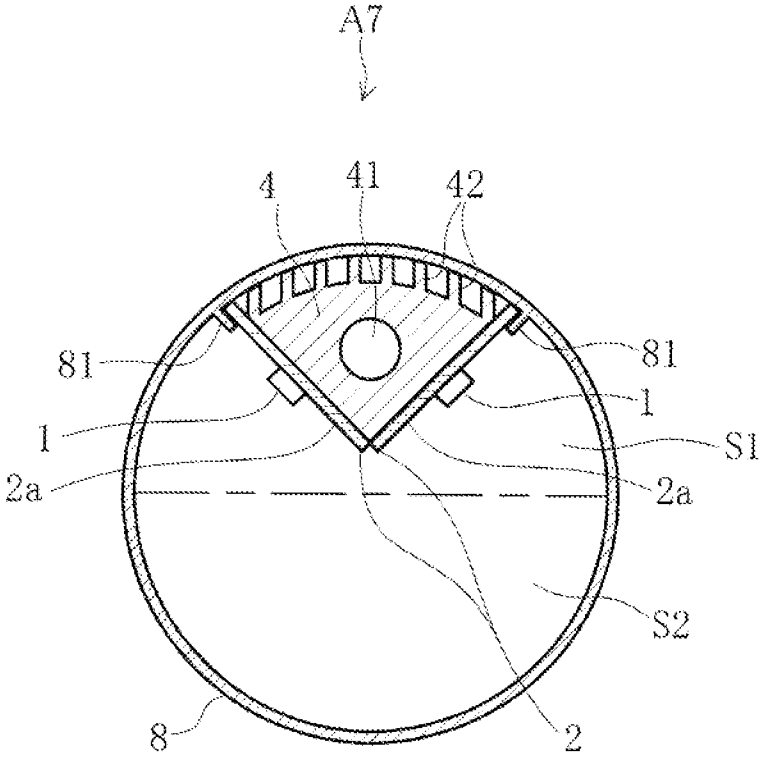

FIG.13

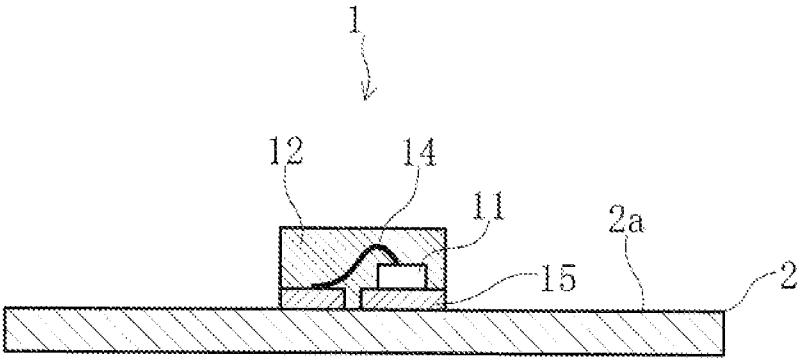

FIG.14

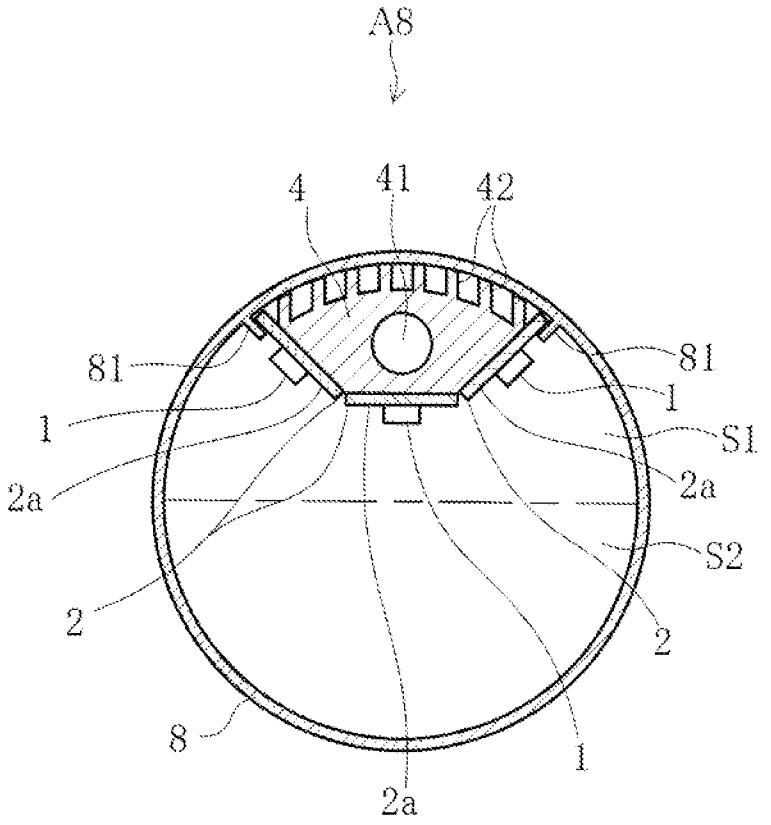

FIG.15

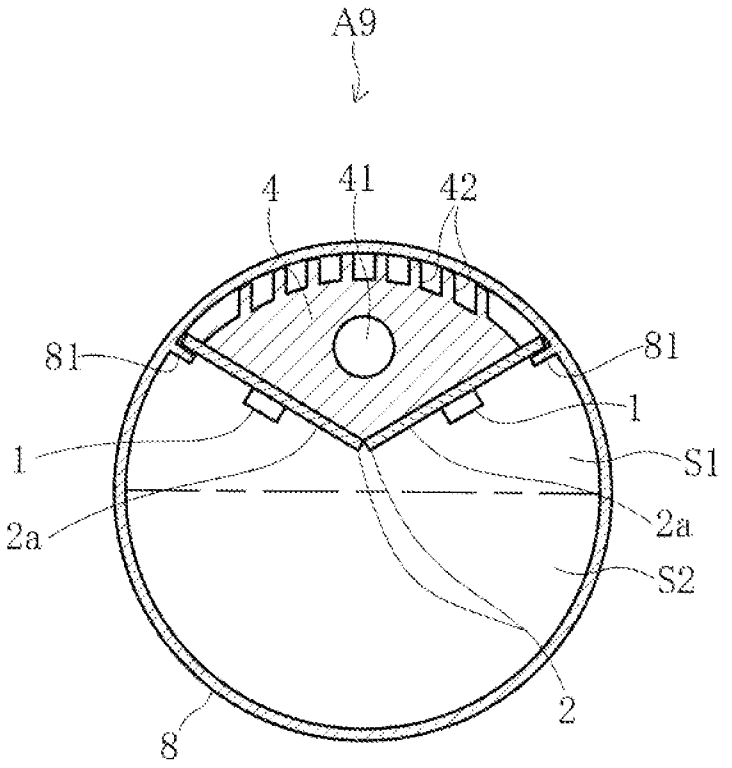

FIG.16

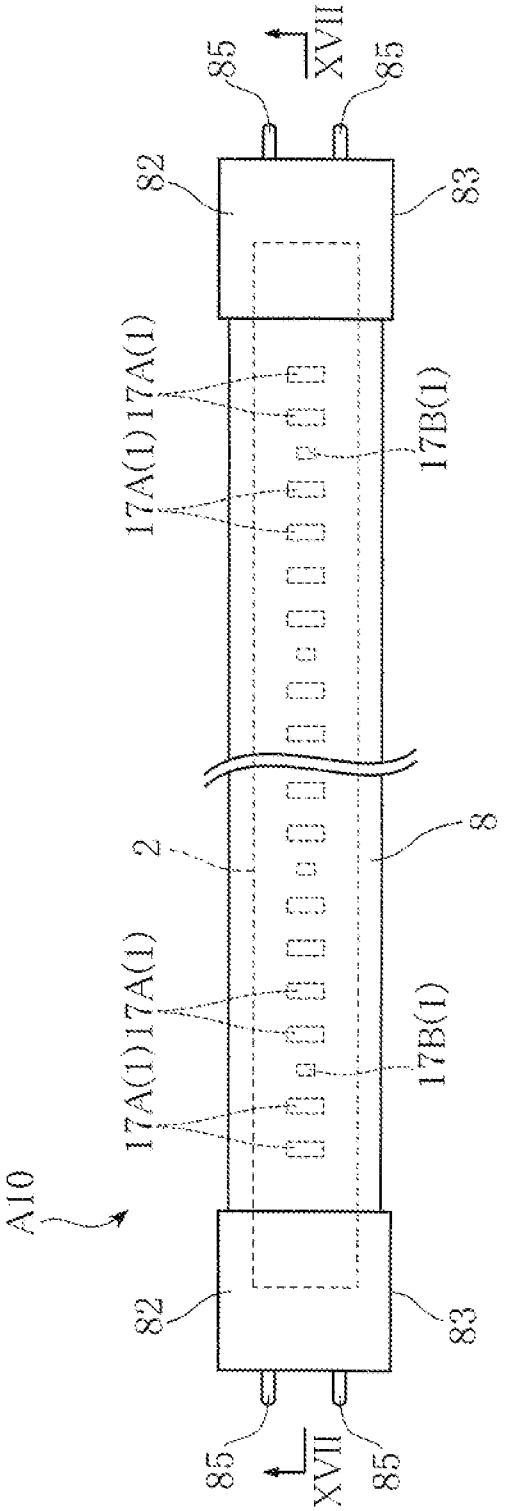
85
XVII
85
82
83
17A(1)
17A(1)
17B(1)
2
8
17A(1)
17A(1)
17B(1)
A10
82
83
85
XVII
85

FIG.17

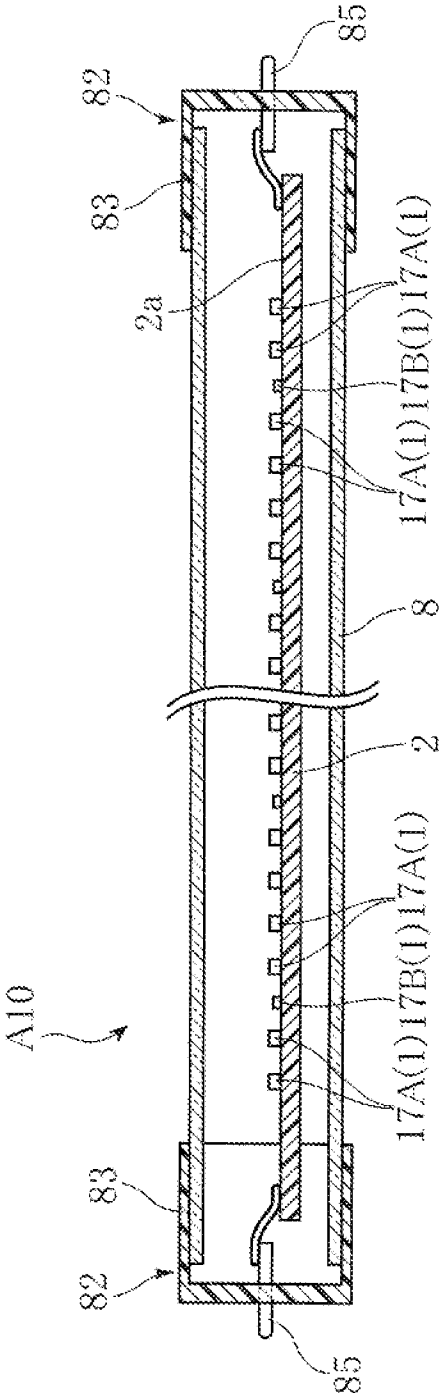

FIG.18

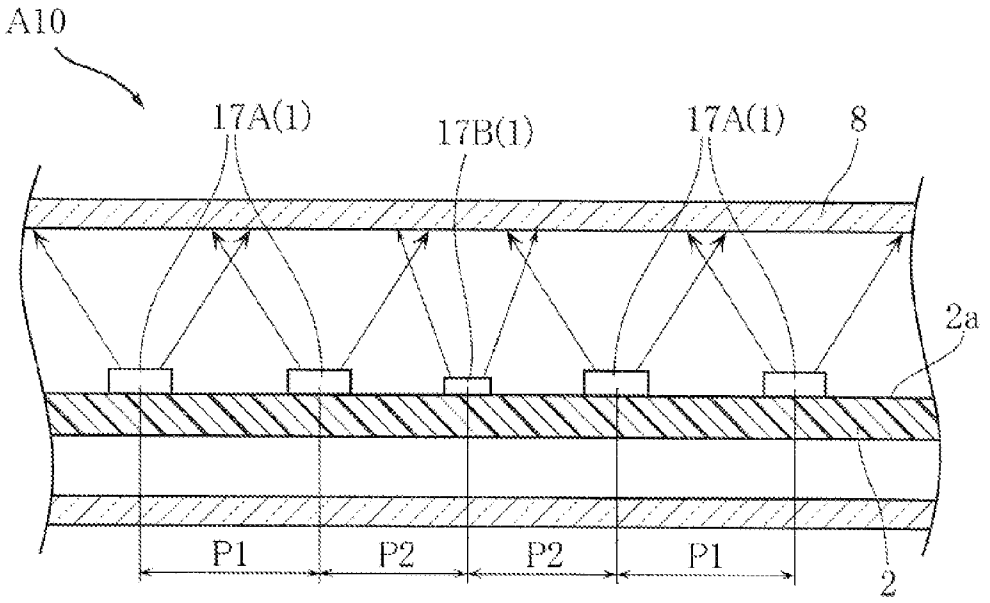

FIG.19

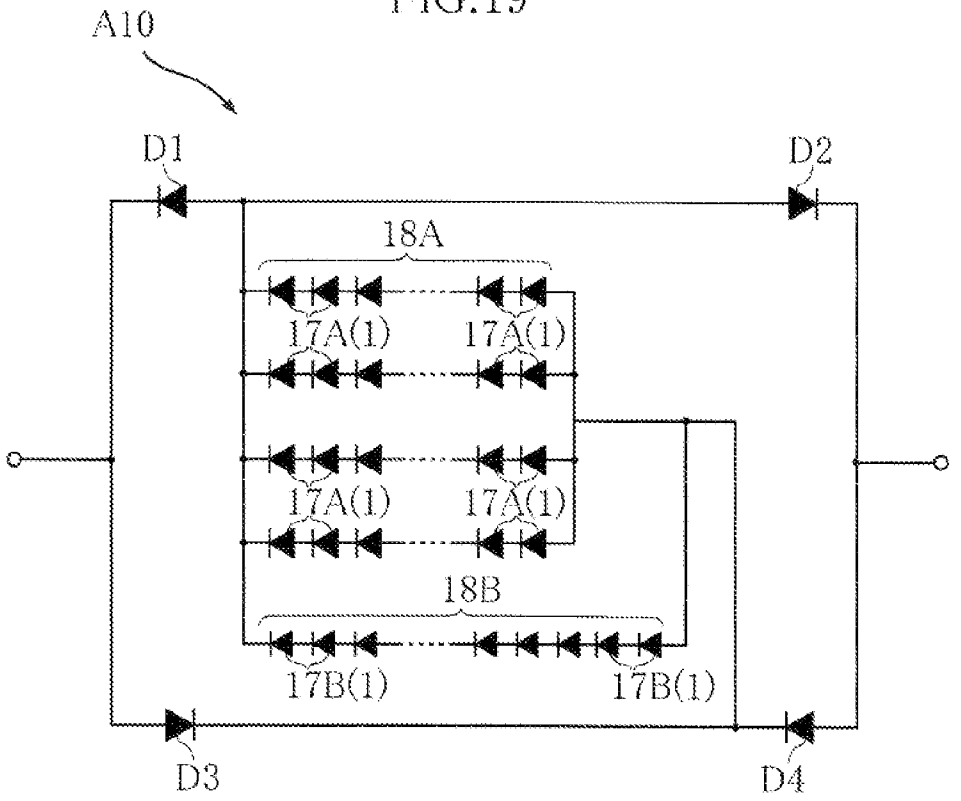

FIG.20

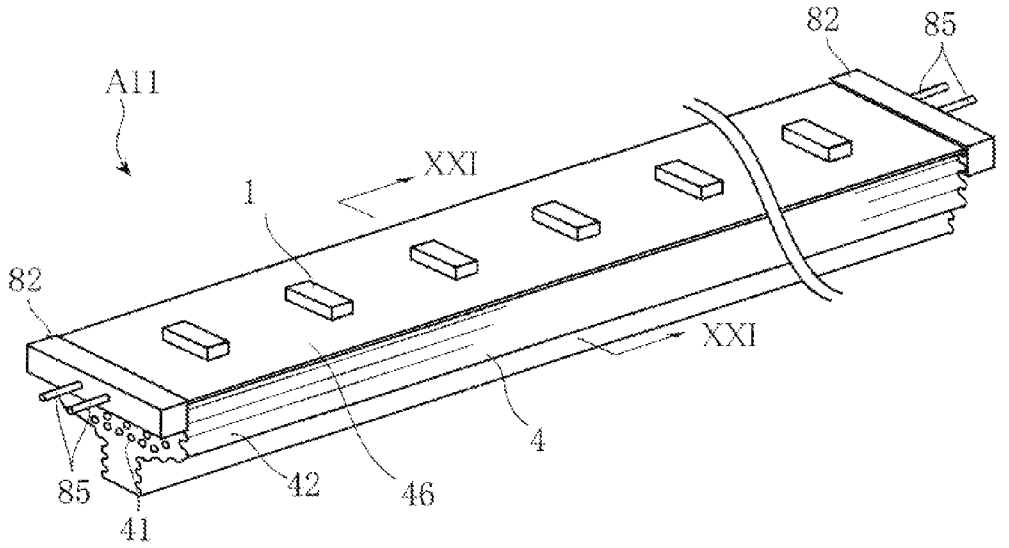

FIG.21

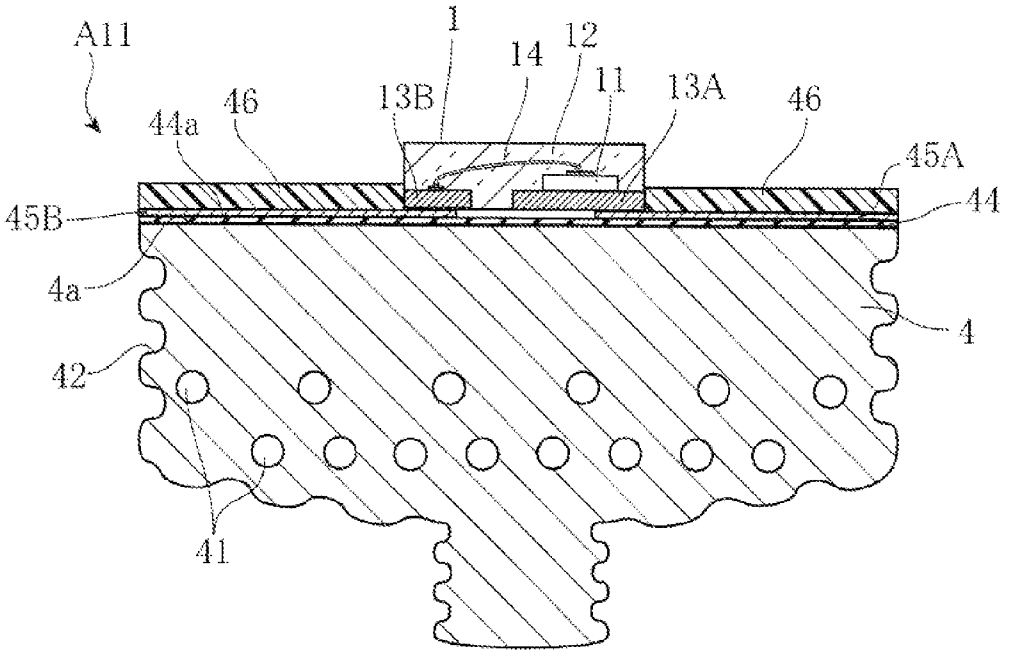

FIG.22

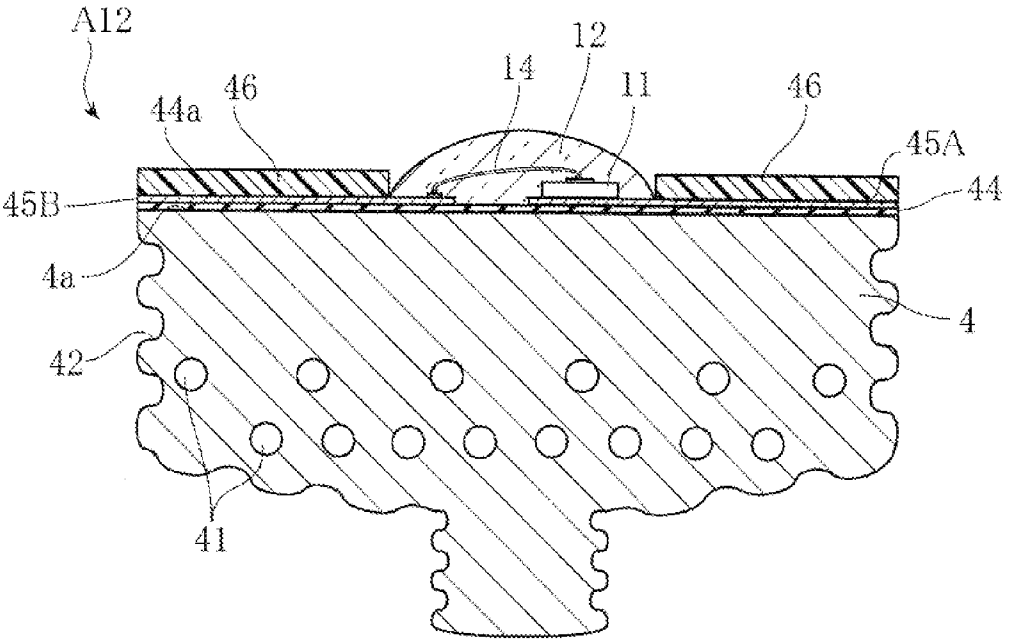

FIG.23

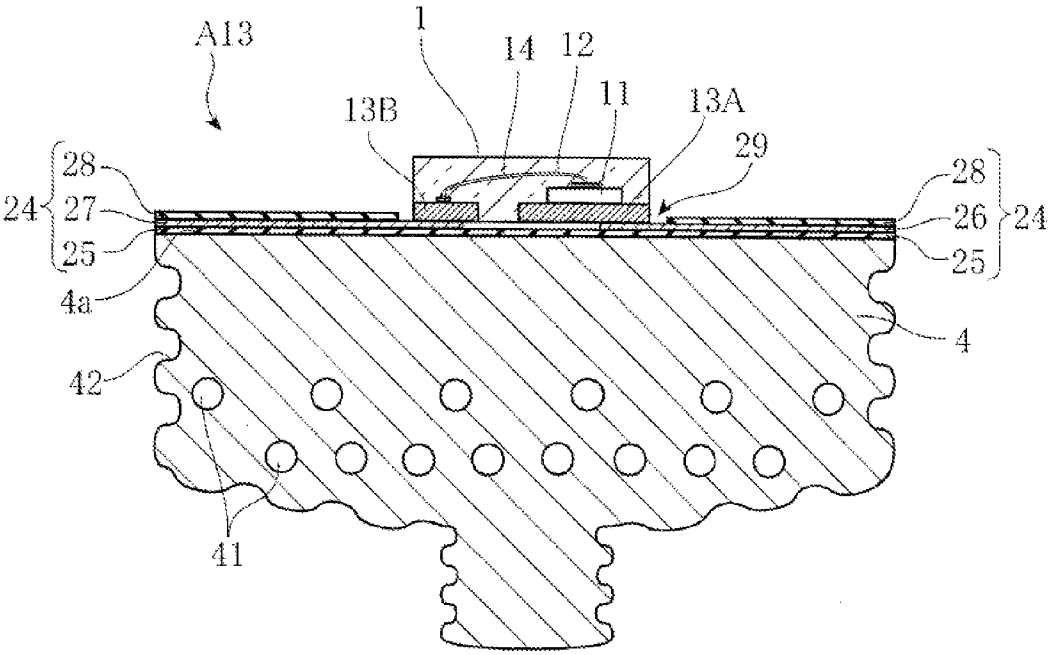

FIG.24

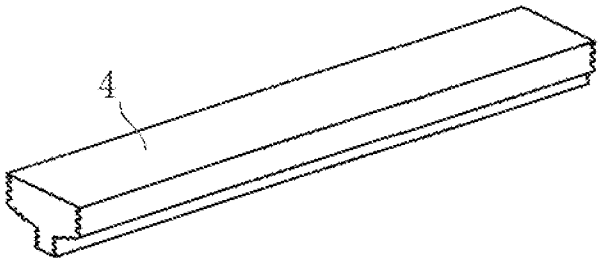

FIG.25

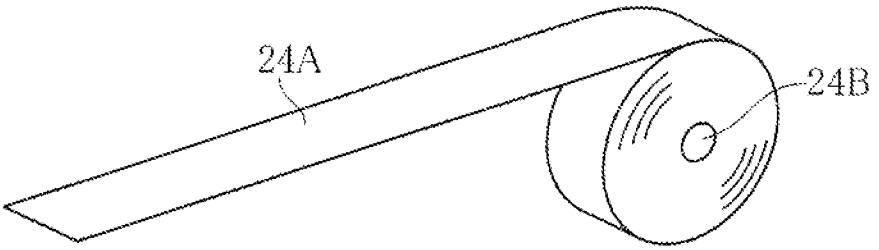

FIG.26

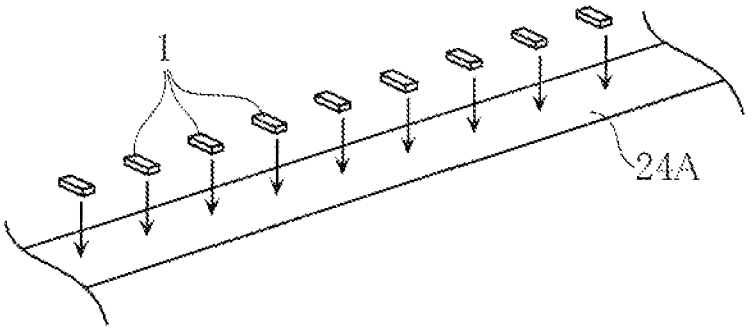

FIG.27

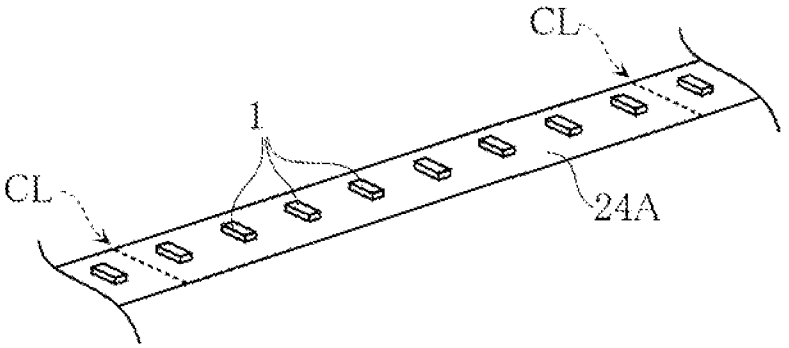

FIG.28

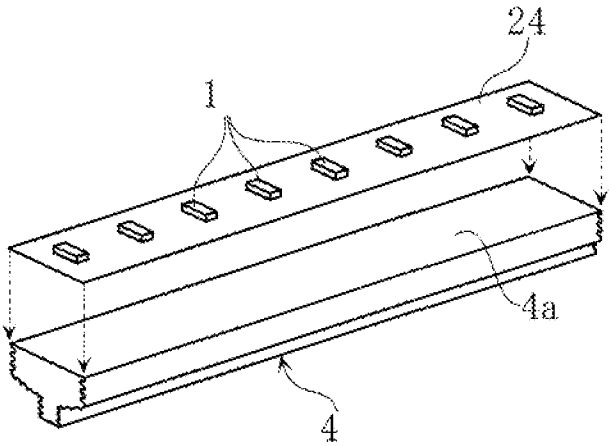

FIG.29

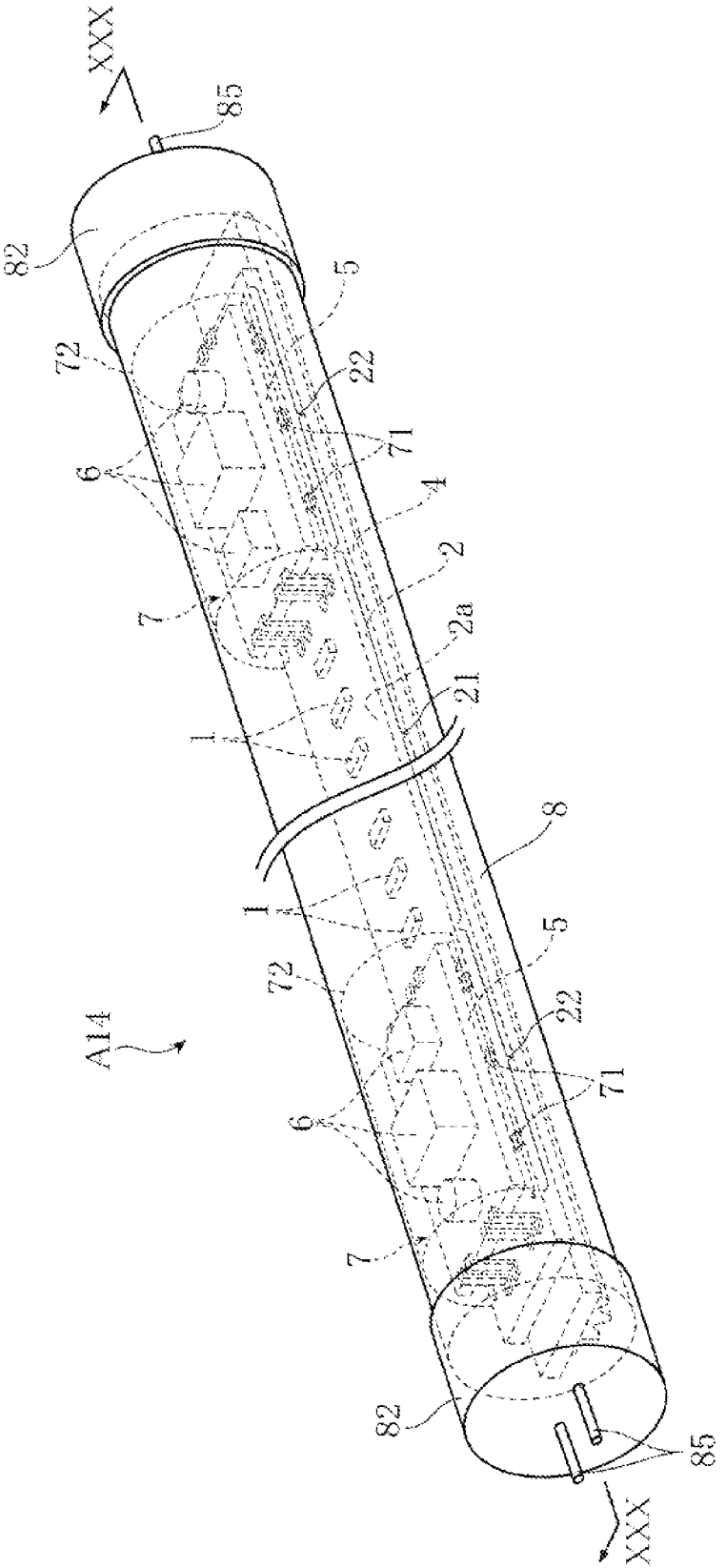

FIG.30

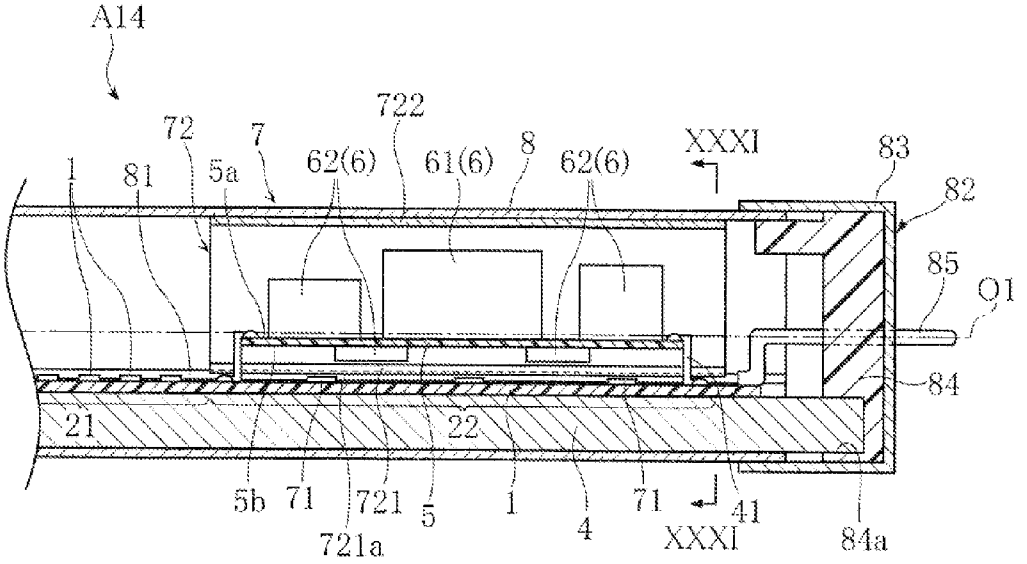
A14
72
7
722
1
81
5a
62(6)
61(6)
8
62(6)
XXXI
83
82
85
O1
84
21
22
5b
71
721
5
1
4
71
41
721a
XXXI
84a

FIG.31

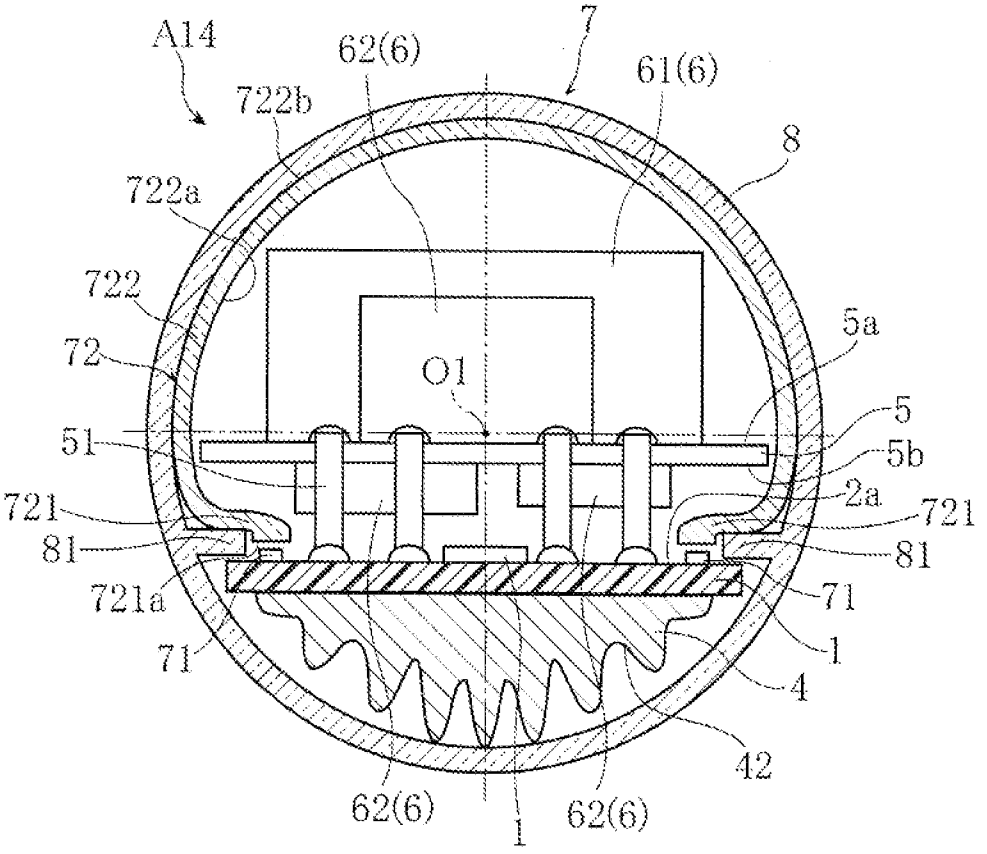
A14
62(6)
7
61(6)
722b
8
722a
722
5a
72
O1
5
51
5b
2a
721
721
81
81
721a
71
71
1
4
42
62(6)
1
62(6)

FIG.32

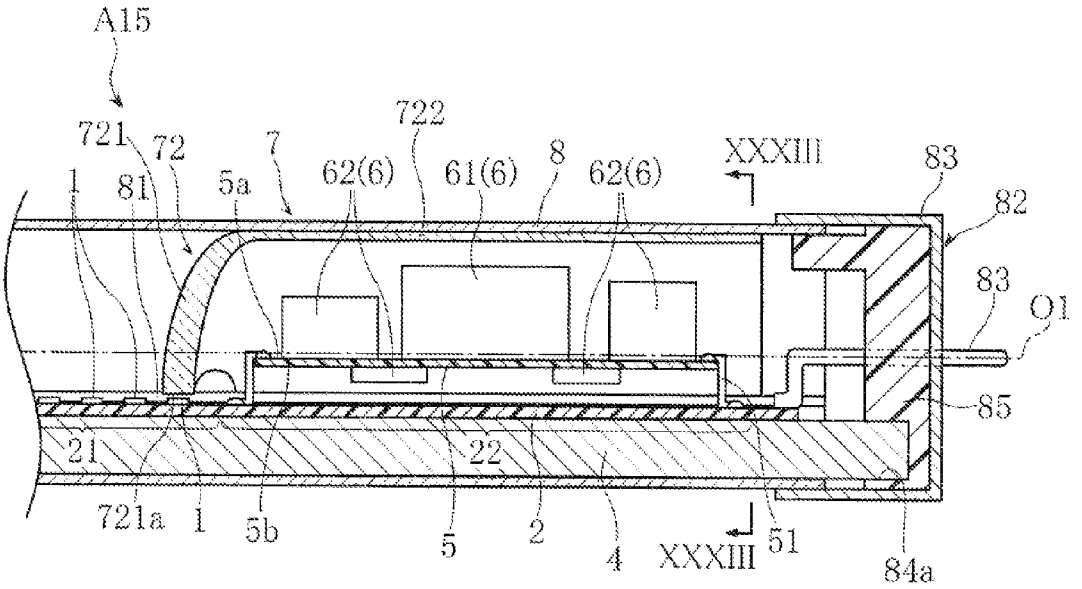
A15
721
72
7
722
1
81
5a
62(6)
61(6)
8
62(6)
XXXIII
83
82
83
O1
85
21
22
721a
1
5b
5
2
4
XXXIII
51
84a

FIG.33

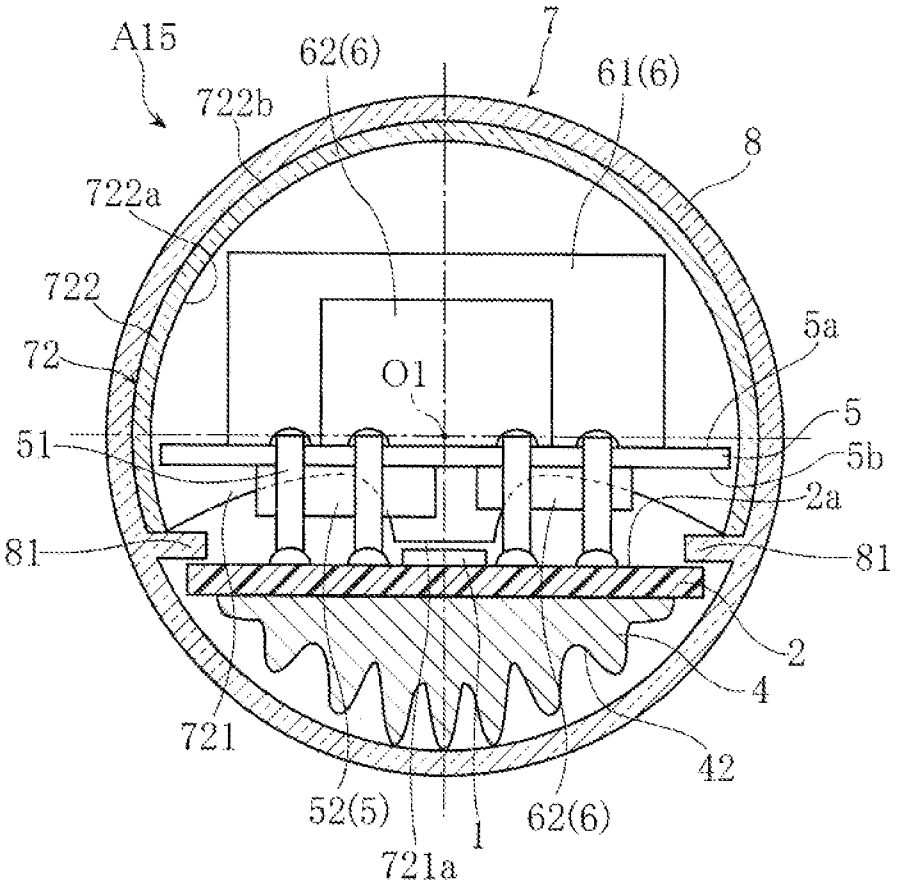
A15
62(6)
7
61(6)
722b
8
722a
722
5a
72
O1
5
51
5b
2a
81
81
2
4
721
42
52(5)
62(6)
1
721a

FIG.34

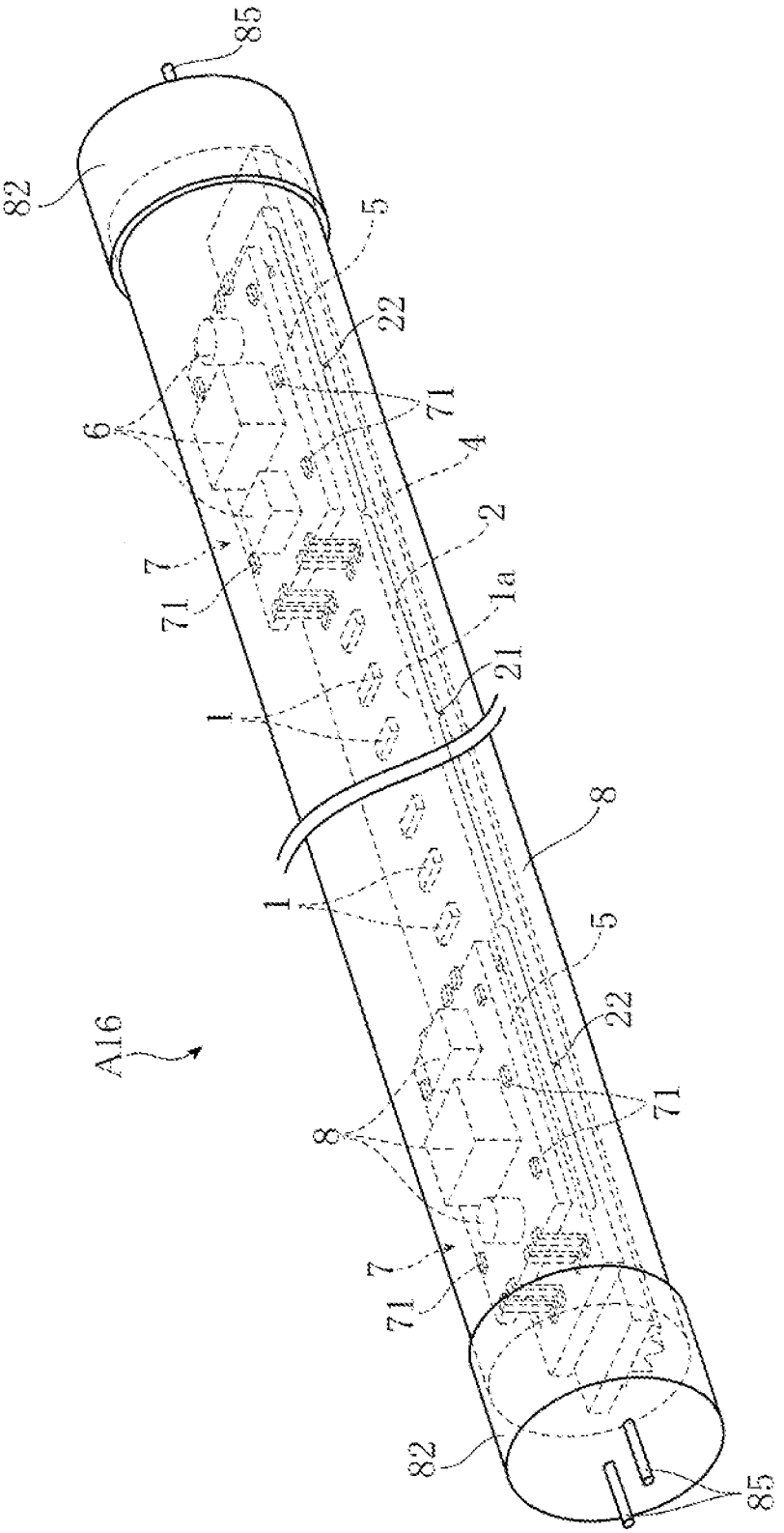

FIG.35

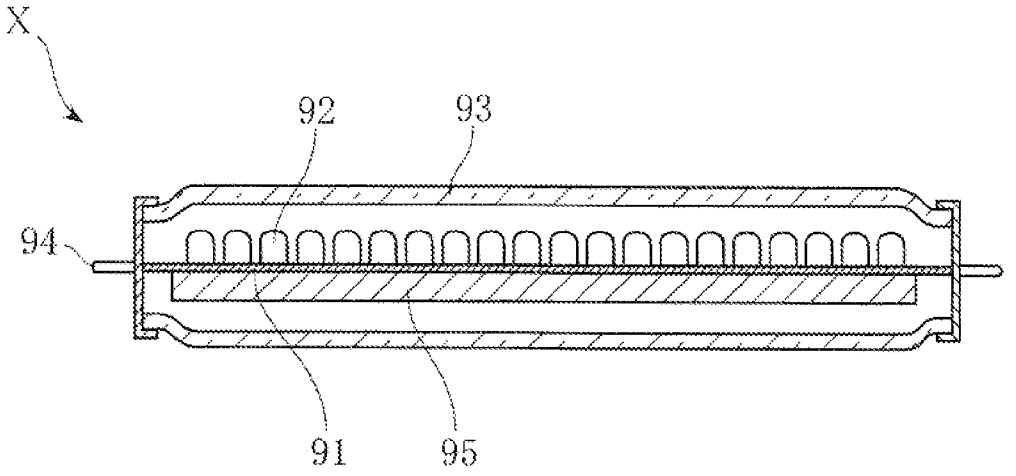

FIG.36

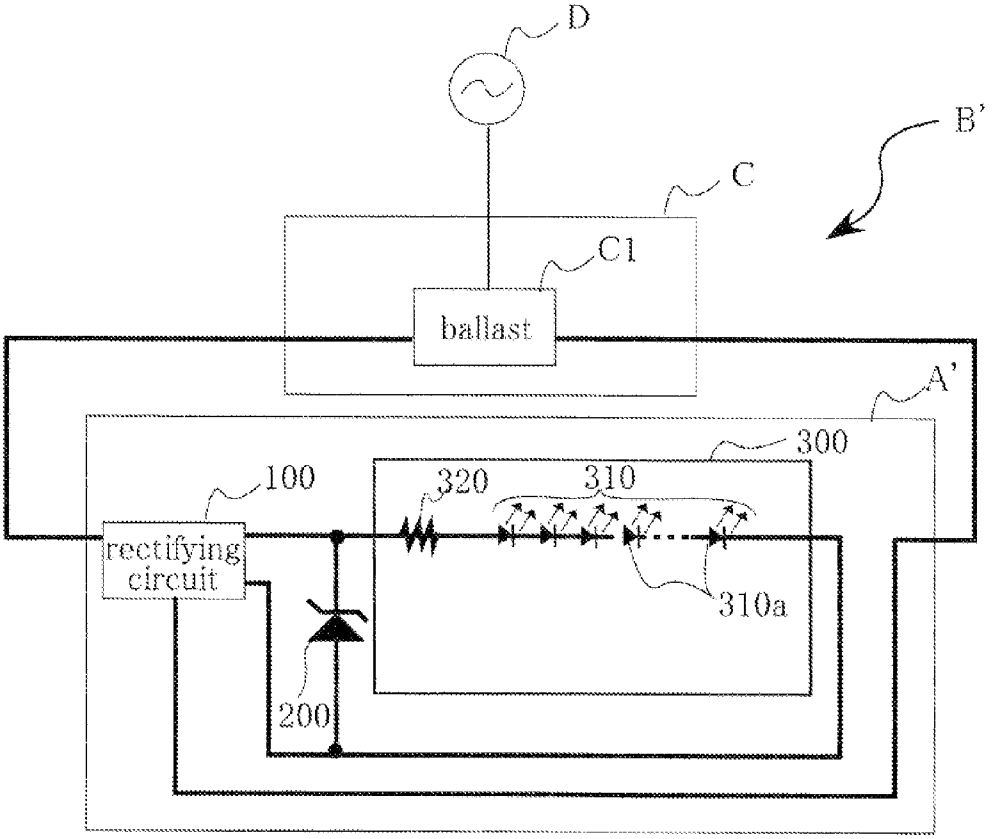

LED LAMP

TECHNICAL FIELD

The present invention relates to an LED lamp that uses a light emitting diode (hereinafter referred to as "LED") as the light source and is attachable to a general-use fluorescent lighting fixture as a substitute for a fluorescent lamp.

BACKGROUND ART

FIG. **35** shows a conventional LED lamp (see Patent Document 1, for example). The LED lamp X illustrated in the figure includes a substrate **91** in the form of an elongated rectangle, a plurality of LEDs **92** mounted on the substrate **91**, a tube **93** accommodating the substrate **91**, and terminals **94**. The substrate **91** is formed with a wiring pattern (not shown) connected to the LEDs **92** and the terminals **94**. The LED lamp X is structured such that the LEDs **92** can be turned on when the terminals **94** are fitted into inlet ports of sockets of a general-use fluorescent lighting fixture.

The general-use fluorescent lighting fixture herein refers to lighting fixtures widely used for interior lighting as the main application, and more specifically, lighting fixtures which use, for example in Japan, a commercial 100 V or 200 V power supply and to which a JIS C7617 straight-tube fluorescent lamp or a JIS C7618 circular fluorescent lamp can be attached.

In the LED lamp X, on the substrate **91** is mounted a circuit **95** for converting alternating current supplied from a commercial power supply into direct current and supplying the current to the LEDs as a constant current. The circuit includes a plurality of power supply parts. Thus, it is preferable that the circuit **95** having this structure is arranged adjacent to the terminals **94**, which are the power supply regions, i.e., adjacent to ends of the LED lamp X.

In the above-described conventional LED lamp X, however, a space exists between the tube **93**, which serves as a cover, and the LEDs **92**. Thus, because of the difference in index of refraction between these parts, part of the light is reflected at the inner surface of the tube **93**. Thus, to achieve a sufficient amount of light emission from the lamp, a large number of LEDs **92** needs to be used or a large current needs to be supplied to the LEDs.

The circuit **95** is mounted on the reverse surface (the surface opposite to the surface on which the LEDs **92** are mounted) of the substrate **91**. Considering the influences of the heat generated at the LEDs **92**, the power supply parts constituting the circuit **95** should not be placed at positions that overlap the LEDs **92** as shown in FIG. **35**. Instead, the power supply parts are preferably deviated in the longitudinal direction of the substrate **91** to be placed at the ends of the substrate spaced in the longitudinal direction so as not to overlap the LEDs **92**. However, when the power supply parts are placed so as not to overlap the LEDs **92**, LEDs **92** cannot be placed adjacent to the ends of the substrate **91**. This increases the non-light-emitting area of the LED lamp X, which is not desirable.

To make the LED lamp X having the above-described structure, the substrate **91** is first inserted into the tube **93**. Then, the terminals **94** need to be attached to the ends of the tube **93**, while keeping the positional relationship between the tube **93** and the substrate **91** unchanged. In this way, the process for manufacturing the conventional LED lamp X is troublesome.

Further, in the conventional LED lamp X, directivity of the light from the LEDs **92** is high. Thus, mounting of such LEDs

92 on a single substrate **91** cannot achieve uniform illumination over an entire area from a ceiling to a bottom, for example.

Further, when the conventional LED lamp X is used as a substitute for a straight-tube fluorescent lamp, e.g. for a FL40W type having a long tube length (tube length 1198 mm), the LEDs **92** need to provide a light emission area of about 1100 mm that substantially corresponds to the tube length. To achieve uniform illumination by the LED lamp. X, the LEDs **92** need to be arranged at equal intervals. When the interval between the LEDs **92** is large, relatively dark portions are provided between adjacent LEDs, resulting in non-uniform brightness. To avoid such non-uniform brightness, it is necessary to increase the number of the LEDs **92** and reduce the interval between the LEDs **92**.

However, when the number of the LEDs **92** is increased, the power consumption of the LED lamp X increases. For the power consumption of the LEDs **92** to be suppressed to a level equal to or lower than that of a fluorescent lamp, the interval between the LEDs **92** cannot be reduced to a level that eliminates the non-uniformity of brightness between adjacent LEDs **92**.

Moreover, in the LED lamp X, heat is generated during the lighting of the LEDs **92**. Thus, the temperature of the substrate **91** and the LEDs **92** undesirably increases to result in the breakage of the wiring pattern on the obverse surface of the substrate **91** and the LEDs **92**.

The circuit **95** is mounted on the reverse surface (the surface opposite to the surface on which the LEDs **92** are mounted) of the substrate **91**. Considering the influences of the heat generated at the LEDs **92**, the power supply parts constituting the circuit **95** should not be placed at positions that overlap the LEDs **92** as shown in the figure. Instead, the power supply parts are preferably deviated in the longitudinal direction of the substrate **91** to be placed at the ends of the substrate spaced in the longitudinal direction so as not to overlap the LEDs **92**. That is, it is preferable that the power supply parts are arranged separately in a region (power supply region) different from the region (light source region) where the LEDs **92** are arranged.

However, when the power supply parts are arranged in the power supply region (ends of the substrate **91**) separate from the light source region where the LEDs **92** are placed, LEDs **92** cannot be arranged adjacent to the ends of the substrate **91**. As a result, the regions adjacent to the ends of the substrate **91** become a non-light-emitting area. This leads to a degraded illumination quality of the lamp X, which is not desirable.

FIG. **36** is a block diagram showing an LED lighting apparatus provided by attaching an LED lamp to a conventional general-use fluorescent lighting fixture. The general-use fluorescent lighting fixture herein refers to lighting fixtures widely used for interior lighting as the main application, and more specifically, lighting fixtures which use, for example in Japan, a commercial 100 V or 200 V power supply and to which a JIS C7617 straight-tube fluorescent lamp or a JIS C7618 circular fluorescent lamp can be attached. The LED lighting apparatus B' includes a general-use fluorescent lighting fixture C and an LED lamp A'.

The general-use fluorescent lighting fixture C is originally designed to input alternating current from a commercial 100 V power supply D to a fluorescent lamp mounted to the lighting fixture. The general-use fluorescent lighting fixture C includes a ballast C**1**. The ballast C**1** is designed to generate a high voltage in a fluorescent lamp to start a discharge and stabilize the current inputted into the fluorescent lamp after the start of the discharge. General-use fluorescent lighting fixtures C are classified into a starter type, a rapid start type,

an inverter type and so on, depending on the mode of the lighting of fluorescent lamps. In the state in which the LED lamp A' is attached to the lighting fixture, the voltage, current and frequency outputted from the ballast C**1** vary depending on the lighting mode even when the rated voltage is the same. Moreover, even when the lighting mode is the same, the characteristics of the ballast C**1** slightly vary depending on the kinds of the general-use fluorescent lighting fixture C.

The LED lamp A' emits light when alternating current from a commercial 100 V power supply is inputted into the lamp via the ballast C**1** of the general-use fluorescent lighting fixture C. The LED lamp A' includes a rectifying circuit **100**, a protective part **200** and an LED lighting circuit **300**. The rectifying circuit **100** converts an alternating current inputted from the ballast C**1** into a direct current and outputs the direct current to the LED lighting circuit **300**. The LED lighting circuit **300** turn on the white LEDs **310***a* incorporated in it by using the direct current inputted from the rectifying circuit **100**. The specification and number of the white LEDs **310***a* connected in series to form an LED row **310** and the resistance of the resistor **320** in the LED lighting circuit **300** are determined based on the rated voltage of the general-use fluorescent lighting fixture C to which the lamp is attached.

Since the voltage, current and frequency to be inputted vary depending on the ballast C**1**, the resistor **320** is provided in the LED lighting circuit **300** to prevent excessive current from flowing to the white LEDs **310***a* . Further, it is also proposed to connect a constant current circuit such as a constant current diode to the input side of the white LEDs **310***a* to keep the current flowing to the white LEDs **310***a* constant.

However, the resistor **320** consumes electric power by conversion into heat and hence deteriorates the use efficiency of electric power. Further, to connect a constant current circuit, a region for arranging such a circuit needs to be secured in the LED lighting circuit **300**. Since white LEDs **310***a* cannot be placed in this region, the non-light-emitting area, which is dark, increases. Moreover, the use of a constant current circuit increases the manufacturing cost.

Patent Document 1: JP-U-6-54103

DISCLOSURE OF THE INVENTION

Problems to be Solved by the Invention

The present invention is proposed under the circumstances described above. It is therefore an object of the present invention to provide an LED lamp that can provide a proper amount of light emission with the use of a smaller number of LEDs or with less power consumption.

Means for Solving the Problems

To solve the above-described problems, the present invention takes the following technical measures.

An LED lamp provided according to the present invention includes a plurality of LED light sources, and a substrate on which the LED light sources are mounted in a row. A light guide covering the LED light sources is provided on the substrate. The light guide is held in close contact with each of the LED light sources.

In a preferred embodiment of the present invention, the light guide is semicircular in cross section.

In a preferred embodiment of the present invention, the LED lamp further includes a light-transmitting cover held in close contact with the entirety of an outer surface of the light guide.

In a preferred embodiment of the present invention, the LED lamp further includes a heat dissipation member attached to a surface of the substrate that is opposite to the mount surface on which the LED light sources are mounted.

In a preferred embodiment of the present invention, the light guide contains a fluorescent material that emits light of a wavelength different from a wavelength of light from the LED light sources when excited by the light from the LED light sources.

In a preferred embodiment of the present invention, the LED light source comprises an LED module. The LED module includes an LED bare chip and a resin package that seals the LED bare chip.

In a preferred embodiment of the present invention, the LED light source comprises an LED bare chip mounted on the substrate.

In a preferred embodiment of the present invention, the LED lamp includes a first substrate on which a plurality of LEDs are mounted, a second substrate on which a plurality of power supply parts are mounted, and a tubular case having a circular cross section and accommodating the first substrate and the second substrate. The power supply parts are mounted on opposite surfaces of the second substrate.

In a preferred embodiment of the present invention, the first substrate and the second substrate are spaced from each other in the thickness direction of the substrate. The first substrate is located at a position deviated in the radial direction from the center axis of the case, and the second substrate is closer to the center axis than the first substrate is.

In a preferred embodiment of the present invention, the first substrate is located at a position deviated relative to the center axis of the case in a direction opposite to the mount surface of the LEDs.

In a preferred embodiment of the present invention, the LED lamp further includes a heat dissipation member extending parallel to the center axis of the case, and a pair of bases attached to ends of the heat dissipation member. The first substrate is laid on the heat dissipation member, whereas the second substrate is spaced from the heat dissipation member.

In a preferred embodiment of the present invention, the second substrate is supported by the heat dissipation member.

In a preferred embodiment of the present invention, the power supply parts include an AC/DC converter for converting alternating current into direct current.

In a preferred embodiment of the present invention, the case is in the form of a straight tube. The case is integrally formed with projections that project inward to make a pair within a plane parallel to the center axis of the case. Movement of the first substrate relative to the case in the radial direction is restricted by the projections.

An LED lighting apparatus provided according to another aspect of the present invention includes a ballast for stabilizing alternating current inputted from an AC power supply, a rectifying circuit for performing full-wave rectification with respect to the alternating current inputted from the ballast, and a lighting circuit directly connected to the rectifying circuit. The lighting circuit consists of a plurality of LEDs that emit light when direct current is inputted from the rectifying circuit, and a connection line that connects a substrate on which the LEDs are mounted and each of the LEDs.

In a preferred embodiment of the present invention, the lighting circuit includes a plurality of LED rows each including a plurality of LEDs connected in series, and the LED rows are connected in parallel with each other.

In a preferred embodiment of the present invention, a protective part is connected between the rectifying circuit and the lighting circuit.

In a preferred embodiment of the present invention, the protective part is a Zener diode or a fuse.

An LED lamp provided according to still another aspect of the present invention includes a plurality of LED substrates on each of which a plurality of LED modules are mounted, and a cylindrical light-transmitting tube accommodating the LED substrates. The plurality of LED substrates are accommodated in such a manner as to define a cross section in the form of a sector together with part of the light-transmitting tube when the interior of the light-transmitting tube is viewed in the axial direction.

In a preferred embodiment of the present invention, provided that the internal space of the light-transmitting tube is divided along a line of a diameter into two parts, the LED substrates are positioned within one of two semicircular regions when the interior of the light-transmitting tube is seen in the axial direction.

In a preferred embodiment of the present invention, the LED substrates are arranged such that the mount surfaces of the LED modules are oriented toward the other one of the semicircular regions.

In a preferred embodiment of the present invention, a heat dissipation member is provided on the reverse surfaces of the LED substrates opposite to the mount surfaces.

In a preferred embodiment of the present invention, the heat dissipation member is formed with a through-hole extending in the axial direction of the light-transmitting tube.

In a preferred embodiment of the present invention, an LED lamp includes a plurality of LEDs arranged at predetermined intervals. The plurality of LEDs include a plurality of first LEDs, and a plurality of second LEDs having lower power consumption than the first LEDs. Each of the second LEDs is arranged between adjacent first LEDs.

In a preferred embodiment of the present invention, at least two first LEDs are arranged between adjacent second LEDs. The interval between the second LED and the first LED that are adjacent to each other is smaller than the interval between adjacent first LEDs.

In a preferred embodiment of the present invention, each of the second LEDs is placed at the intermediate position between adjacent first LEDs.

In a preferred embodiment of the present invention, the first LEDs are so arranged that a plurality first LED series connection portions, each consisting of a predetermined number of first LEDs connected in series, are connected in parallel with each other. The second LEDs are connected in series to form a second LED series connection portion. The first LED series connection portions and the second LED series connection portion are connected in parallel with each other.

In a preferred embodiment of the present invention, the number of the second LEDs constituting the second LED series connection portion is larger than the number of the first LEDs constituting the first LED series connection portion.

According to still another aspect of the present invention, there is provided an LED lamp including an LED element. The LED lamp includes a heat dissipation member for supporting the LED element, an insulating layer laid on the surface of the heat dissipation member, and a metal wiring layer laid on the surface of the insulating layer and electrically connected to the LED element.

In a preferred embodiment of the present invention, the insulating layer is made of SiO_2.

In a preferred embodiment of the present invention, the LED lamp includes an LED module including the LED element, a lead having an obverse surface on which the LED element is mounted, and a resin package covering the LED element and the lead. The reverse surface of the lead is bonded to the metal wiring layer.

According to still another aspect of the present invention, there is provided an LED lamp including an LED element. The LED lamp includes a heat dissipation member for supporting the LED element, and a substrate provided in contact with the heat dissipation member. The substrate includes at least an electrically insulating base film layer, and a metal wiring layer formed on the base film layer. The LED element is electrically connected to the metal wiring layer.

In a preferred embodiment of the present invention, the base film layer is made of polyimide.

In a preferred embodiment of the present invention, the LED lamp includes an LED module including the LED element, a lead having an obverse surface on which the LED element is mounted, and a resin package covering the LED element and the lead. The reverse surface of the lead is bonded to the metal wiring layer.

In a preferred embodiment of the present invention, the substrate is a flexible wiring substrate.

According to still another aspect of the present invention, there is provided a method for making an LED lamp including a plurality of LED elements, a heat dissipation member for supporting the LED elements, and a flexible wiring substrate provided in contact with the heat dissipation member and including at least an electrically insulating base film layer and a metal wiring layer formed on the base film layer. The method includes the steps of forming the heat dissipation member having a predetermined shape, mounting the LED elements on an elongated base material that is in advance formed with a metal wiring layer as a wiring pattern and that is to become the flexible wiring substrate, cutting the base material on which the LED elements are mounted into the length of the heat dissipation member, and bonding the flexible wiring substrate obtained by the cutting to the heat dissipation member.

An LED lamp provided according to still another aspect of the present invention includes a plurality of LEDs arranged in a light source region, a plurality of power supply parts arranged in a power supply region, a tubular case accommodating the LEDs and the power supply parts. The lamp further includes auxiliary light source means for emitting light to the outside from the area of the case that corresponds to the power supply region.

In a preferred embodiment of the present invention, the auxiliary light source means includes an additional LED arranged in the power supply region. Preferably, in this case, the auxiliary light source means includes a light guide. The light guide includes a light introducing portion for introducing the light from the additional LED to the inside, and a light emitting portion that is in the form of a part of a cylinder extending along the inner surface of the case and that allows the light from the light introducing portion to travel and to be emitted to the outside through a light emitting surface provided on the outer side.

In a preferred embodiment of the present invention, the auxiliary light source means includes a light guide. The light guide includes a light introducing portion for introducing the light from at least one of the LEDs to the inside, and a light emitting portion that is in the form of a part of a cylinder extending along the inner surface of the case and that allows the light from the light introducing portion to travel and to be emitted to the outside through a light emitting surface provided on the outer side.

In a preferred embodiment of the present invention, the inner side of the light emitting portion comprises a light

reflection surface for reflecting light introduced from the light introducing portion toward the light emitting surface.

In a preferred embodiment of the present invention, the LEDs are mounted on one of the surfaces of the first substrate, whereas the power supply parts are mounted on opposite surfaces of the second substrate.

In a preferred embodiment of the present invention, the case is in the form of a straight tube having a circular cross section. The first substrate and the second substrate are spaced from each other in the thickness direction of the substrate. The first substrate is located at a position deviated in the radial direction from the center axis of the case, and the second substrate is closer to the center axis than the first substrate is.

In a preferred embodiment of the present invention, the case is integrally formed with projections that project inward to make a pair within a plane parallel to the center axis of the case. Movement of the first substrate relative to the case in the radial direction is restricted by the projections.

In a preferred embodiment of the present invention, the case is integrally formed with projections that project inward to make a pair within a plane parallel to the center axis of the case. Movement of the light guide relative to the case is restricted by the projections. Preferably, in this case, movement of the substrate on which the LEDs are mounted and the light guide relative to the case is restricted by the projections.

Other features and advantages of the present invention will become more apparent from the detailed description given below with reference to the accompanying drawings.

BRIEF DESCRIPTION OF THE DRAWINGS

FIG. **1** is a plan view showing an LED lamp according to a first embodiment of the present invention;

FIG. **2** is a sectional view taken along lines II-II in FIG. **1**;

FIG. **3** is a plan view showing an LED lamp according to a second embodiment of the present invention;

FIG. **4** is a partially-cut-away perspective view of the LED lamp shown in FIG. **3**;

FIG. **5** is a sectional view showing an LED lamp according to a third embodiment of the present invention;

FIG. **6** is a sectional view showing an LED lamp according to a fourth embodiment of the present invention;

FIG. **7** is a perspective view showing an LED lamp according to a fifth embodiment of the present invention;

FIG. **8** is a sectional view of a principal portion, taken along lines VIII-VIII in FIG. **7**;

FIG. **9** is an enlarged sectional view taken along lines IX-IX in FIG. **8**;

FIG. **10** is a block diagram showing an LED lighting apparatus according to a sixth embodiment of the present invention;

FIG. **11** is a partially-cut-away perspective view of an LED lamp according to a seventh embodiment of the present invention;

FIG. **12** is a sectional view of the LED lamp shown in FIG. **11**;

FIG. **13** is a sectional view of an LED module provided in the LED lamp shown in FIG. **11**;

FIG. **14** is a sectional view showing an LED lamp according to an eighth embodiment of the present invention;

FIG. **15** is a sectional view showing an LED lamp according to a ninth embodiment of the present invention;

FIG. **16** is a plan view showing an LED lamp according to a tenth embodiment of the present invention;

FIG. **17** is a sectional view taken along lines XVII-XVII in FIG. **16**;

FIG. **18** is an enlarged sectional view of a principal portion showing the light emission state of the LED lamp of FIG. **16**;

FIG. **19** is a circuit diagram showing the electric structure of the LED lamp of FIG. **16**;

FIG. **20** is a perspective view showing an LED lamp according to an eleventh embodiment of the present invention;

FIG. **21** is a sectional view of a principal portion, taken along lines XXI-XXI in FIG. **20**;

FIG. **22** is a sectional view of a principal portion of an LED lamp according to a twelfth embodiment of the present invention;

FIG. **23** is a sectional view of a principal portion of an LED lamp according to a thirteenth embodiment of the present invention;

FIG. **24** is a perspective view for describing a method for manufacturing an LED lamp;

FIG. **25** is a perspective view for describing a method for manufacturing an LED lamp;

FIG. **26** is a perspective view for describing a method for manufacturing an LED lamp;

FIG. **27** is a perspective view for describing a method for manufacturing an LED lamp;

FIG. **28** is a perspective view for describing a method for manufacturing an LED lamp;

FIG. **29** is a perspective view showing an LED lamp according to a fourteenth embodiment of the present invention;

FIG. **30** is an enlarged sectional view taken along lines XXX-XXX in FIG. **29**;

FIG. **31** is an enlarged sectional view taken along lines XXXI-XXXI in FIG. **30**;

FIG. **32** is a sectional view showing an LED lamp according to a fifteenth embodiment of the present invention;

FIG. **33** is an enlarged sectional view taken along lines XXXIII-XXXIII in FIG. **32**;

FIG. **34** is a perspective view showing an LED lamp according to a sixteenth embodiment of the present invention;

FIG. **35** is a sectional view showing an example of conventional LED lamp; and

FIG. **36** is a block diagram of an LED lighting apparatus obtained by attaching an LED lamp to a conventional general-use fluorescent lighting fixture.

BEST MODE FOR CARRYING OUT THE INVENTION

Preferred embodiments of the present invention are described below with reference to the drawings.

FIGS. **1** and **2** show an LED lamp according to a first embodiment of the present invention. The LED lamp **A1** of this embodiment includes a plurality of LED modules **1** serving as a light source, a substrate **2**, a light guide **3**, a light-transmitting cover **8**, heat dissipation members **4** and bases **82**, and has an elongated cylindrical shape as a whole. For instance, the LED lamp **A1** is used as attached to a general-use fluorescent lighting fixture, as a substitute for e.g. a straight-tube fluorescent lamp.

The LED modules **1** are mounted on the substrate **2** at predetermined intervals in a row. As shown in FIG. **2**, each of the LED modules **1** is made up of an LED bare chip **11**, a resin package **12**, a bonding wire **14** and a base member **15**. For instance, the LED bare chip **11** is made of a GaN-based semiconductor and emits blue light. The resin package **12** is made of e.g. silicone resin that transmits light, and covers the LED bare chip **11**. The resin package **12** contains a fluorescent material that emits yellow light when excited by blue

light, for example. The bonding wire **14** electrically connects the LED bare chip **11** and the base member **15**. The base member **15** is bonded to the substrate **2** as electrically connected to a wiring pattern (not shown) of the substrate **2**.

The substrate **2** is made of e.g. Al and has an elongated rectangular shape. The mount surface **2***a* of the substrate **2**, on which the LED modules **1** are mounted, is covered by the light guide **3**. On the reverse surface **2***b* of the substrate **2**, which is opposite to the mount surface **2***a*, are provided the heat dissipation members **4**.

The light guide **3** is provided for efficiently diffusing light from the LED modules **1** to the outside. The light guide covers the LED modules **1** in close contact with the LED modules. The light guide **3** has a semicircular cross section and is made of e.g. the same material as the basic material of the resin package **12** of the LED module **1**. Thus, e.g. blue light emitted from the LED bare chip **11** of the LED module **1** passes through the resin package **12** of the LED module **1** and the light guide **3** for emission to the outside.

The light-transmitting cover **8** is provided for diffusing the light emitted from the LED module **1** and guided through the light guide **3**. The light-transmitting cover covers the light guide **3** in close contact with the light guide. The light-transmitting cover **8** is in the form of the arc of a semicircle in cross section and made of e.g. glass.

The light guide **3** is arranged so as not to define a gap between itself and the LED modules **1** or the light-transmitting cover **8**. This arrangement suppresses reflection of light at the boundary between the light guide **3** and the LED modules **1** or the light-transmitting cover **8**. Thus, the light from the LED modules **1** is efficiently guided to the outside.

The heat dissipation members **4** are made of e.g. Al similarly to the substrate **2** and extend vertically from the reverse surface **2***b* of the substrate **2**. The heat dissipation members **4** are arranged side by side at predetermined intervals in the width direction of the substrate **2** and exposed to the outside air. Thus, the heat dissipation members **4** efficiently dissipate the heat generated due to the lighting of the LED modules **1** to the outside air.

The bases **82** are the portions to be fitted into the inlet ports of a general-use fluorescent lighting fixture and have terminals **85** for electrical conduction. The bases **82** are attached to the ends of the substrate **2** spaced in the longitudinal direction. Each of the terminals **85** is connected to the wiring pattern (not shown) on the substrate **2**. By fitting each terminal **85** into an inlet port of the fluorescent lighting fixture, electric power is supplied to the LED modules **1**, whereby the LED bare chips **11** are turned on.

The advantages of the LED lamp A**1** are described below.

Part of the blue light emitted from the LED bare chips **11** becomes yellow light because of the fluorescent material contained in the resin package **12**. The yellow light and the remaining blue light are mixed to produce white light. The white light is emitted from the resin package **12** to the light guide **3** and diffused within the light guide **3**. The white light is then emitted from the outer surface of the light guide **3** to the outside through the light-transmitting cover **8**. To emit white light, the fluorescent material as described above may be contained in the light guide **3**, instead of in the resin package **12**. Alternatively, use may be made of an LED module **1** which includes red, green and blue LED bare chips **11** collectively sealed in the resin package **12**.

Since the resin package **12** and the light guide **3**, which are made of the same material, are arranged in close contact with each other, light passes from the resin package **12** to the light guide **3** with almost no refraction. Further, the difference in index of refraction between the light guide **3** made of silicone resin and the light-transmitting cover **8** made of glass is relatively small. Thus, light passes from the light guide **3** to the light-transmitting cover **8** with almost no refraction. Thus, light from the LED modules **1** is efficiently emitted to the outside with almost no diffusion at the inner surface side of the light-transmitting cover **8**. Thus, with the LED lamp A**1**, the number of the LED modules **1** can be reduced, so that the cost for the parts reduces. Further, current to be supplied to the LED modules **1** can be suppressed, which leads to low power consumption.

FIGS. **3**-**34** show other embodiments of the LED lamp according to the present invention. The elements which are identical or similar to those of the foregoing embodiment are designated by the same reference signs as those used for the foregoing embodiment, and the description is omitted.

FIGS. **3** and **4** illustrate an LED lamp according to a second embodiment of the present invention. The LED lamp A**2** of this embodiment has an annular shape as a whole and is attached to a general-use fluorescent lighting fixture as a substitute for e.g. a circular fluorescent lamp. The light-transmitting cover **8** is annular as a whole and in the form of an arc of a semicircle in cross section. A plurality of substrates **2** are curved to conform to the shape of the light-transmitting cover **8**. The substrates **2** are arranged along the light-transmitting cover **8**. The gap between adjacent substrates **2** or between the substrate **2** and the base **82** may be filled by a plate-like spacer. The heat dissipation members **4** are curved to conform to the shape of the light-transmitting cover **8**. Similarly to the foregoing embodiment, the light guide **3** is provided between the mount surfaces **2***a* of the substrates **2** and the light-transmitting cover **8** in close contact with these and the LED modules **1**.

In the LED lamp A**2** again, an air space having a considerably different index of refraction does not exist between the light guide **3** and the LED modules **1** or between the light guide **3** and the light-transmitting cover **8**. Thus, light from the LED modules **1** is efficiently guided to the outside through the light guide **3**. Thus, with the LED lamp A**2** again, the number of the LED modules **1** can be reduced, so that the cost for the parts reduces. Further, current to be supplied to the LED modules **1** can be suppressed, which leads to low power consumption.

FIG. **5** illustrates an LED lamp according to a third embodiment of the present invention. The LED lamp A**3** of this embodiment is different from the foregoing embodiments in that a light-transmitting cover is not provided and the LED modules **1** are covered only by the light guide **3**. This LED lamp A**3** allows further reduction of the number of the parts, which leads to further reduction of the cost.

FIG. **6** illustrates an LED lamp according to a fourth embodiment of the present invention. The LED lamp A**4** of this embodiment is different from the foregoing embodiments in that the light source comprises LED bare chips **11** directly mounted on the substrate **2**. The light guide **3** covers the LED bare chips **11** in close contact with the LED bare chips. In order for the LED lamp A**4** to emit white light, the LED chips **11** are designed to emit blue light, while the above-described fluorescent material is contained in the light guide **3**. Alternatively, LED bare chips **11** that emit red light, green light and blue light may be alternately arranged so that white light is emitted by additive mixing of the colors of light. This LED lamp A**4** also allows reduction of the number of the parts, which leads to further reduction of the cost. Moreover, light from the LED bare chips **11** is guided to the outside more efficiently.

The present invention is not limited to the foregoing embodiments.

The specific structure of each part of the LED lamp according to the present invention can be varied in design in many ways. For instance, the entirety or part of the substrate may be accommodated in the light-transmitting cover. The substrate and the heat dissipation members may be integrally formed.

FIGS. **7-9** illustrate an LED lamp according to a fifth embodiment of the present invention. The LED lamp A**5** of this embodiment includes a substrate **2**, a plurality of LED modules **1**, a heat dissipation member **4**, power supply substrates **5**, a plurality of power supply parts **6**, a case **8** and a pair of bases **82**. For instance, the LED lamp is used as attached to a general-use fluorescent lighting fixture, as a substitute for a straight-tube fluorescent lamp.

The substrate **2** is made of e.g. glass-fiber-reinforced epoxy resin and has an elongated rectangular shape. A wiring (not shown) is formed at appropriate portions on the surface of the substrate **2**. The substrate **2** is laid on the heat dissipation member **4**, which will be described later, and attached to the heat dissipation member **4** with e.g. screws.

The LED modules **1** are the light source of the LED lamp A**5** and mounted on the mount surface **2***a* of the substrate **2**. The LED modules **1** are arranged side by side at predetermined intervals in the longitudinal direction of the substrate **2** and connected in series by a wiring not shown, for example. As the LED module **1**, one packaged for surface mounting and including a white LED is suitably used.

The heat dissipation member **4** is made of e.g. Al and has a long, thin, block-like shape extending in the longitudinal direction of the substrate **2**. As shown in FIG. **9**, the surface of the heat dissipation member **4** is formed with a plurality of recesses **41** and hence irregular. The recesses **41** extend substantially along the entire length of the heat dissipation member **4** in the longitudinal direction of the substrate **2**. The recesses **41** can be formed by making the heat dissipation member **4** with a mold having projections.

Each of the power supply substrates **5** is made of e.g. glass-fiber-reinforced epoxy resin and has an elongated rectangular shape. A wiring (not shown) is formed at appropriate portions on the surface of the power supply substrate **5**. The power supply substrate **5** is attached to the substrate **2** by a plurality of leads **51** made of metal. The leads **51** are provided at ends of the power supply substrate **5** spaced in the longitudinal direction, with one end of each lead fixed to the power supply substrate **5** with solder while the other end of the lead soldered to a pad (not shown) provided on the mount surface **2***a* of the substrate **2**. With this arrangement, the power supply substrate **5** is held spaced from the substrate **2** and the heat dissipation member **4**. The wiring of the substrate **2** and the wiring of the power supply substrate **5** are electrically connected to each other via the leads **51**.

The power supply parts **6** function as a power supply circuit for lighting the LED modules **1** and are mounted on opposite surfaces (the upper surface **5***a* and the lower surface **5***b*) of the power supply substrate **5**. The power supply parts **6** include an AC/DC converter **61** and other functional parts **62** such as a capacitor or a resistor. The power supply parts are structured to convert alternating current supplied from a commercial power supply into a constant direct current and supply the direct current to the LED modules **1**. The AC/DC converter **61** is larger and occupies a larger area than other parts mounted on the power supply substrate **5**.

The case **8** accommodates the substrate **2**, the heat dissipation member **4** and the power supply substrates **5**. As shown in FIG. **9**, the case is in the form of a straight tube having a circular cross section. The inner surface of the case **8** is integrally formed with a pair of projections **81** that project inward. Each of the projections **81** is deviated downward (in the radial direction) from the center axis O**1** of the case **8**. Each projection projects within a plane parallel to the center axis O**1** and extends in the direction along the center axis O**1**. The case **8** having this structure is formed as a single-piece member by extrusion of a synthetic resin such as polycarbonate.

The widths of the substrate **2** and the heat dissipation member **4** and the dimension of the heat dissipation member **4** in the vertical direction are determined so that the substrate **2** and the heat dissipation member **4** can be accommodated in a space below the projections **81** in FIG. **9**. As shown in FIG. **9**, the movement of the substrate **2** relative to the case **8** in a direction perpendicular to the center axis O**1** (upward direction in FIG. **1**) is restricted by the contact of the mount surface **2***a* with the projections **81**. The bottom of the heat dissipation member **4** is held in contact with the inner surface of a lower portion of the case **8**.

The substrate **2** is located at a position deviated from the center axis O**1** of the case **8** in a direction opposite to the mount surface **2***a*, whereas each power supply substrate **5** is located adjacent to the center axis O**1** of the case **8**. Thus, the power supply substrate **5** is positioned closer to the center axis O**1** than the substrate **2** is. This allows the width of the power supply substrate **5** to be dimensioned larger than that of the substrate **2**. The accommodation of the substrate **2**, the heat dissipation member **4** and the power supply substrates **5** in the case **8** is performed by inserting the substrate **2** and the heat dissipation member **4** into the space below the projections **81** in the case **8** by sliding movement.

The paired bases **82** are the portions to be fitted to the sockets of a fluorescent lighting fixture for electric power supply from a commercial AC power supply. As shown in FIG. **8**, each base **82** includes a cover **83** in the form of a bottomed cylinder, a resin block **84** held in a hollow portion of the cover **83**, and two terminals **85**. The resin block **84** is formed with a recess **84***a*. One of the ends of the heat dissipation member **4** spaced in the longitudinal direction is fitted into the recess **84***a*, whereby the base **82** is attached to the heat dissipation member **4**. Thus, in the LED lamp A**5**, the heat dissipation member **4** is supported by the paired bases **82**.

Between the cover **83** and the resin block **84** is defined a gap in the form of part of a cylinder. One of the ends of the case **8** spaced in the longitudinal direction is received in this gap. As shown in FIG. **8**, a gap is defined between an end edge **8***a* of the case **8** in the longitudinal direction and an end edge **84***b* of the resin block **84**. The terminal **85** penetrates the cover **83** and the resin block **84**. An end (outer end) of the terminal **85** is to be inserted into an inlet port of the socket of a fluorescent lighting fixture, whereas the other end of the terminal **85** is electrically connected to the wiring of the substrate **2**.

The advantages of the LED lamp A**5** having the above-described structure are described below.

In use of the LED lamp A**5**, with the terminals **85** of the bases **82** fitted into the inlet ports of the sockets of a fluorescent lighting fixture, electric power is supplied, whereby the LED modules **1** are turned on.

According to this embodiment, the power supply parts **6** are mounted on opposite surfaces (the upper surface **5***a* and the lower surface **5***b*) of the power supply substrate **5**. Thus, as compared with the structure in which the power supply parts **6** are mounted only on e.g. the upper surface **5***a* of the power supply substrate **5**, the power supply parts **6** are mounted with a higher efficiency, so that the area of the power supply substrate **5** can be made smaller. Accordingly, the dimension of the power supply substrate **5** in the longitudinal direction

along the center axis O1 of the case **8** can be made smaller, which results in the reduction of the non-light-emitting area in the LED lamp A**5**.

The substrate **2** is located at a position deviated from the center axis O1 of the case **8** in a direction opposite to the mount surface **2***a* (the surface on which the LED modules **1** are mounted). Thus, when light from the LED modules **1** travels to the outside through the case **8**, the light is directed to a range of over 180° in the circumferential direction with respect to the center axis O1 of the case **8**. Thus, as compared with the structure in which the substrate **2** is arranged along the center axis O1 of the case **8**, the light exiting the case **8** is directed to a larger range, so that the illumination range of the LED lamp A**5** is substantially larger. This contributes to the reduction of the non-light-emitting area of the LED lamp A**5**.

The power supply substrate **5** is positioned closer to the center axis O1 of the case **8** than the substrate **2** is. This allows the dimension of the power supply substrate **5** in the width direction perpendicular to the center axis O1 of the case **8** to be made larger than that of the substrate **2**. Thus, the dimension of the power supply substrate **5** in the longitudinal direction along the center axis O1 of the case **8** can be made relatively small. This is suitable for reducing the non-light-emitting area in the LED lamp A**5**.

In this embodiment, the substrate **2** is laid on the heat dissipation member **4**. Thus, heat generated during the lighting of the LED modules **1** is effectively dissipated to the outside through the heat dissipation member **4**, whereby deterioration of the LED modules **1** is prevented. Moreover, since the heat dissipation member **4** extends substantially along the entire length of the case **8**, the heat dissipation member functions as a structural material of the LED lamp A**5**. Thus, the provision of the heat dissipation member **4** secures the rigidity of the LED lamp A**5**.

Since the heat dissipation member **4** is in contact with the inner surface of the case **8**, the substrate **2** and the heat dissipation member **4** are supported by the case **8** at three locations. This achieves proper positioning of the substrate **2** relative to the case **8**.

Since the case **8** is made of a synthetic resin in this embodiment, the breakage is less likely to occur as compared with a fluorescent lamp comprising a glass tube. Further, as described with reference to FIG. **8**, a gap is defined between the end edge **8***a* of the case **8** and the end edge **84***b* of the resin block **84** of the base **82**. Thus, even when the case **8** undergoes thermal expansion during the lighting of the LED modules **1**, the expansion of the case **8** in the longitudinal direction is absorbed, so that unfavorable deformation of the case **8** does not occur.

The power supply substrate **5** is supported by the heat dissipation member **4** via the substrate **2**. That is, the power supply substrate **5** is supported in a stable state by the heat dissipation member **4** that can function as a structural material, and is hence stably held at a desired position in the case **8**.

In this embodiment, the AC/DC converter **61** is included in the power supply parts **6** that function as the power supply circuit of the LED lamp A**5**. With this arrangement, a constant direct current for supply to the LED modules **1** is easily generated and hence the structure of the power supply circuit can be simplified. The AC/DC converter **61** is relatively large and occupies a large area. However, the power supply substrate **5** is arranged closer to the center axis O1 of the case **8** relative to the substrate **2**. This allows the AC/DC converter **61** mounted on the power supply substrate **5** to be accommodated in the case **8** without coming into contact with the case **8**.

A pair of projections **81** are formed on the inner side of the case **8**. The movement of the substrate **2** relative to the case **8** in a direction perpendicular to the center axis O1 of the case **8** (radial direction of the case **8**) is restricted by the contact of the projection **81** with the mount surface **2***a* at each end of the substrate **2** in the width direction. Thus, in assembling the LED lamp A**5**, positioning of the substrate **2** relative to the case **8** is achieved just by inserting the substrate **2** into the case **8**. Thus, assembling of the LED lamp A**5** is easy.

FIG. **10** is a block diagram showing an LED lighting apparatus according to a sixth embodiment of the present invention. The LED lighting apparatus B of this embodiment includes a general-use fluorescent lighting fixture C and an LED lamp A**6**.

The general-use fluorescent lighting fixture C may be a starter type, which includes a ballast C**1** for controlling the alternating current flowing to a fluorescent lamp, a glow starter (not shown) for lighting a fluorescent lamp, and four inlet ports (not shown) for connecting four terminals of a fluorescent lamp. Two of the inlet ports are provided for inputting alternating current into a fluorescent lamp, whereas other two are connected to the glow starter. Since the glow starter is not used in this embodiment, the illustration of the wiring corresponding to the inlet ports connected to the glow starter is omitted in FIG. **10**. In this embodiment, it can be considered that the general-use fluorescent lighting fixture C outputs alternating current, inputted from a commercial 100 V power supply D, to the LED lamp A**6** via the ballast C**1**.

The LED lamp A**6** is attached to the general-use fluorescent lighting fixture C, and alternating current is inputted from the ballast C**1** to the LED lamp. The LED lamp A**6** includes a rectifying circuit **63**, a protective part **64** and an LED lighting circuit **16**.

The rectifying circuit **63** is provided for converting an alternating current inputted from the ballast C**1** into a direct current and outputting the direct current. The rectifying circuit **63** comprises a diode bridge (not shown) for performing full-wave rectification. Because of the function of the ballast C**1** to stabilize the current, the direct current outputted from the rectifying circuit **63** is a smoothed current. The structure of the rectifying circuit **63** is not limited to this, and any other structures can be employed as long as they can convert alternating current into direct current.

The protective part **64** is provided for preventing a current exceeding a predetermined value from flowing into the LED lighting circuit **16**. In this embodiment, the protective part comprises a Zener diode **2**, which is energized when a voltage exceeding a predetermined value is applied, to prevent current from flowing to the LED lighting circuit **16**. It is only required for the protective part that it is capable of blocking current flowing to the LED lighting circuit **16**. Thus, a fuse, for example, can be employed instead. It is to be noted that these parts are provided for the safe use and do not necessarily need to be provided.

The LED lighting circuit **16** emits light when direct current is inputted from the rectifying circuit **63**. The LED lighting circuit **16** includes a plurality of LED rows **16***a* each including a plurality of white LEDs **11** connected in series. The LED rows **16***a* are connected in parallel with each other and grounded on the cathode side. Each, of the white LEDs **11** emits white light when direct current is inputted from the anode side.

The number of the white LEDs **11** in each LED row **16***a* (hereinafter referred to as "number of serial connections of the LEDs") and the number of the LED rows **16***a* (hereinafter referred to as "number of parallel connections of the LEDs") are determined in accordance with the specification of the

white LEDs **11** and the characteristics of the ballast C**1** of the general-use fluorescent lighting fixture C to which the lamp is to be attached. Power consumption changes depending on the number of serial connections of the LEDS, and the characteristics of the change in power consumption depend on the kind of the ballast C**1**. The number of serial connections of the LEDs is determined appropriately in accordance with the required power consumption. When the number of serial connections of the LEDs is determined, the output current of the ballast C**1** is determined. Thus, the number of parallel connections of the LEDs **11** is determined such that the current flowing to each LED **11** does not exceed the rated current.

The advantages of the LED lighting apparatus B are described below.

According to the present embodiment, in accordance with the characteristics of the ballast C**1** of the general-use fluorescent lighting fixture to which the lamp is to be attached, the numbers of serial connections and parallel connections of the LEDs are determined such that a predetermined current flows to each of the white LEDs **11**. This ensures that a predetermined current flows to the white LEDs **11**, without the need for providing a resistor or a constant current circuit in the LED lighting circuit **16**. Thus, the efficiency in the use of electric power is enhanced as compared with the structure including a resistor, and the dark area where the LED lighting circuit **16** does not emit light reduces as compared with the structure including a constant current circuit, which leads to reduction of the manufacturing cost.

The LED lighting apparatus according to the present invention is not limited to the foregoing embodiment. The specific structure of each part of the LED lighting apparatus according to the present invention can be varied in design in many ways.

Although the LED lamp A**6** is mounted to a starter type general-use fluorescent lighting fixture C in the foregoing embodiment, the present invention is not limited to this. Also with a rapid start type or an inverter type general-use fluorescent lighting fixture C, the present invention can be achieved by appropriately setting the numbers of serial connections and parallel connections of the LEDs in accordance with the characteristics of the ballast C**1**.

The shape of the LED lamp A**6** is not limited, but may be changed in accordance with the general-use fluorescent lighting fixture C to which the lamp is to be attached. For instance, when the LED lamp A**6** is to be attached to a general-use fluorescent lighting fixture B for a straight tube fluorescent lamp, the LED lamp is designed to have a shape similar to a straight-tube fluorescent lamp. When the LED lamp A**6** is to be attached to a general-use fluorescent lighting fixture C for a circular fluorescent lamp, the LED lamp is designed to have a shape similar to a circular fluorescent lamp. Further, the LED lighting circuit **16** may include red LEDs, green LEDs and blue LEDs, instead of white LEDs **11**, to emit white light. The LED lighting circuit may be designed to emit light other than white light.

FIGS. **11-13** illustrate an LED lamp according to a seventh embodiment of the present invention. The LED lamp A**7** of this embodiment includes a plurality of LED modules **1**, two substrates **2**, a light-transmitting cover **8**, a heat dissipation member **4** and bases **82** and has an elongated cylindrical shape as a whole. The LED lamp A**7** has an appearance similar to that of a straight-tube fluorescent lamp and is to be attached to a general-use fluorescent lighting fixture.

The LED modules **1** are mounted on the mount surface **2***a* of each substrate **2** at predetermined intervals in a row. As shown in FIG. **13**, each of the LED modules **1** is made up of an LED bare chip **11**, a resin package **12** protecting the bare chip, and a base member **15** supporting the LED bare chip **11** while being electrically connected to the LED bare chip by a bonding wire **14**. For instance, the LED bare chip **11** is made of a GaN-based semiconductor and emits blue light. The resin package **12** is made of e.g. silicone resin that transmits light. The resin package **12** contains a fluorescent material that emits yellow light when excited by blue light, for example. As the fluorescent material, a green fluorescent material and a red fluorescent material can be used to achieve a high color rendering index. The base member **15** is bonded to the substrate **2** as electrically connected to a wiring pattern (not shown) of the substrate **2**, for example.

The substrate **2** is made of e.g. Al and has an elongated rectangular shape that can be inserted into the light-transmitting cover **8** in the axial direction. As shown in FIG. **12**, the two substrate **2** are accommodated in such a manner as to define a cross section in the form of a sector together with an upper circumferential part of the light-transmitting cover **8** when the interior of the light-transmitting cover **8** is viewed in the axial direction (in the direction penetrating the sheet surface of the figure). The upper circumferential part of the light-transmitting cover **8** forms an arc of the sector, whereas the two substrates **2** form two sides of the sector. In this embodiment, the two substrates **2** forma substantially right angle. Provided that the internal space of the light-transmitting cover **8** is divided into an upper portion and a lower portion along the line of a diameter (the straight dashed line in FIG. **12**), the two substrates **2** are accommodated within the upper semicircular region S**1**. The mount surface **2***a* of each substrate **2** is substantially oriented toward the lower semicircular region S**2**. The light emitted from each substrate **2** travels in various directions and mostly travels from inside of the light-transmitting cover **8** downward through the circumference of the light-transmitting cover **8**. The heat dissipation member **4** is provided on the reverse surfaces of the substrates **2**. The heat dissipation member **4** is placed in the space that is in the form of a sector in cross section and enclosed by the upper circumferential part of the light-transmitting cover **8** and the two substrates **2**.

The light-transmitting cover **8** has an elongated cylindrical shape made by e.g. extrusion of polycarbonate resin. The light-transmitting cover **8** serves to protect the two substrates **2** and diffuse light traveling from each substrate **2**. Ribs **81** for positioning and fixing the substrates **2** are integrally formed on the inner surface of an upper portion of the light-transmitting cover **8**. The substrates **2** are bonded and fixed to the ribs **81**, thereby defining a sectoral cross section together with the upper circumferential part of the light-transmitting cover **8**.

The heat dissipation member **4** is made of e.g. Al similarly to the substrate **2** and made integral with the two substrates **2**. The heat dissipation member **4** is formed with a through-hole **41** and recesses **42**. The through-hole **41** extends in the axial direction of the light-transmitting cover **8**. The recesses **42** are in the form of folds formed on the outer surface close to the upper circumferential part of the light transmitting cover **8**. With this arrangement, the heat dissipation member **4** has a relatively large area for coming into contact with air, and hence efficiently dissipates the heat generated at the substrate **2**.

The base **82** is a portion to be fitted into an inlet port of a general-use fluorescent lighting fixture and includes terminals **85** for current supply. The base **82** is attached to each of the ends spaced in the longitudinal direction of the light-transmitting cover **8** (only one end is shown in FIG. **11**), and each terminal **85** is connected to a wiring pattern (not shown) on the substrate **2**. By fitting each terminal **85** into the inlet

port of a fluorescent lighting fixture, electric power is supplied to the LED modules **1** on the substrate **2**, whereby the LEDs are turned on.

The advantages of the LED lamp A**7** are described below.

In the LED lamp A**7**, most part of the light from the right substrate **2** in FIG. **12** travels from inside of the light-transmitting cover **8** to the lower right side and passes through the circumference of the light-transmitting cover **8** to be emitted toward the lower right side. On the other hand, most part of the light from the left substrate **2** in FIG. **12** travels from inside of the light-transmitting cover **8** to the lower left side and passes through the circumference of the light-transmitting cover **8** to be emitted toward the lower left side.

With this arrangement, when the LED lamp A**7** is attached to a ceiling with the upper semicircular region S**1** positioned on the ceiling side, only a small amount of light travels toward the ceiling, and light is efficiently diffused downward into the space in the room rather than toward the ceiling.

Thus, with the LED lamp A**7** of this embodiment, even when each LED modules **1** has a directivity of light, light is emitted in the downward direction in which each substrate **2** is oriented, whereby efficient and uniform illumination is achieved.

FIG. **14** illustrates an LED lamp according to an eighth embodiment of the present invention. The elements which are identical or similar to those of the foregoing embodiment are designated by the same reference signs as those used for the foregoing embodiment, and the description is omitted.

The LED lamp A**8** shown in FIG. **14** includes three substrates **2**. These substrates **2** are accommodated in such a manner as to define a cross section substantially in the form of a sector together with an upper circumferential part of the light-transmitting cover **8** when the interior of the light-transmitting cover **8** is viewed in the axial direction. The substrates **2** form two sides of the sector and a shorter side provided at a position corresponding to the apex angle of the sector. In this embodiment, the mount surfaces **2***a* of the substrates **2** on the two sides are oriented obliquely downward, whereas the mount surface **2***a* of the central substrate **2** is oriented vertically downward. These three substrates **2** are accommodated in the upper semicircular region S**1**. With this LED lamp A**8**, the substrates **2** allow emission of light in many directions, which leads to further uniform illumination.

FIG. **15** illustrates an LED lamp according to a ninth embodiment of the present invention. In the LED lamp A**9** of this embodiment, the two substrates **2** are arranged to form an obtuse angle. With this LED lamp A**9**, the mount surface **2***a* of each substrate **2** is oriented more downward, so that light is emitted downward more efficiently.

The present invention is not limited to the foregoing embodiments.

The specific structure of each part of the LED lamp according to the present invention can be varied in design in many ways. For instance, the light-transmitting cover may have an opening at a portion adjacent to the heat dissipation member, and part of the heat dissipation member may be exposed from the light-transmitting cover.

The LED module may have a simple structure in which an LED chip is electrically connected to a wiring pattern of an LED substrate by wire bonding.

The LED substrate and the heat dissipation member may be bonded to each other.

A light guide for diffusing light from the LED substrate to the outside may be provided in the internal space of the light-transmitting cover.

FIGS. **16-19** illustrate an LED lamp according to a tenth embodiment of the present invention. The LED lamp A**10** of this embodiment includes a substrate **2**, a plurality of LED modules **1**, a light-transmitting cover **8** and a pair of bases **82**. For instance, the lamp is used as attached to a general-use fluorescent lighting fixture as a substitute for a straight-tube fluorescent lamp for e.g. a FL40W type (tube length 1198 mm).

The substrate **2** is made of e.g. glass-fiber-reinforced epoxy resin and has an elongated rectangular shape. Preferably, in this embodiment, the substrate **2** is a multi-layer substrate comprising lamination of an insulating layer and wiring layers. The wiring layers are electrically connected to each other via a through hole formed in the insulating layer. A predetermined wiring pattern (not shown) is formed on the surface of the substrate **2** and on the wiring layer sandwiched between the insulating layers.

The LED modules **1** are the light source of the LED lamp A**10** and mounted on the obverse surface (upper surface **1***a*) of the substrate **2**. The LED modules **1** are aligned at predetermined intervals in the longitudinal direction of the substrate **2**. As the LED module **1**, one including e.g. a white LED and packaged for surface mounting is suitably used. A heat dissipation member (not shown) made of e.g. Al may be provided on the reverse surface of the substrate **2** (the surface opposite to the surface on which the LED modules **1** are mounted) to efficiently dissipate the heat generated during the lighting of the LED modules **1**.

In this embodiment, the LED modules **1** include a plurality of first LED modules **17**A and a plurality of second LED modules **17**B. The first LED modules **17**A have a larger size and a higher brightness than the second LED modules **17**B and serve as the main light source of the LED lamp A**10**. The second LED modules **17**B have lower power consumption than the first LED modules **17**A and serve as the auxiliary light source of the LED lamp A**10**.

As shown in FIGS. **16** and **17**, at least two first LED modules **17**A (generally four in this embodiment) are arranged between adjacent second LED modules **17**B. Each of the second LED modules **17**B is placed at the intermediate position between adjacent first LED modules **17**A. For instance, the interval P**1** between adjacent first LED modules **17**A is e.g. about 3.6 mm (see FIG. **18**). The interval P**2** between the second LED module **17**B and the first LED module **17**A is smaller than the interval P**1** and about 3.0 mm, for example.

The light-transmitting cover **8** accommodates the substrate **2** on which the LED modules **1** are mounted and is in the form of a straight cylinder. Projections or grooves (not shown) for engagement with the substrate **2** are formed on the inner surface of the light-transmitting cover **8**. Thus, the substrate is held at a predetermined position relative to the light-transmitting cover **8**. The light-transmitting cover **8** having this structure is formed as a single-piece member by extrusion of a light-transmitting synthetic resin such as polycarbonate.

The paired bases **82** are the portions to be fitted to the sockets of a fluorescent lighting fixture for electric power supply from a commercial AC power supply. The bases are attached to ends of the light-transmitting cover **8** spaced in the longitudinal direction. Each base **82** includes a cover **83** in the form of a bottomed cylinder and two terminals **85**. The terminals **85** penetrate the cover **83**. An end (outer end) of the terminal **85** is to be inserted into an inlet port of the socket of a fluorescent lighting fixture, whereas the other end of the terminal **85** is electrically connected to the wiring of the substrate **2**.

As will be understood from FIG. **19** showing the electrical connection, the first LED modules **17**A are so arranged that a plurality first LED series connection portions **18**A, each con-

sisting of a predetermined number of first LED modules **17**A connected in series, are connected in parallel with each other. In this embodiment, four first LED series connection portions **18**A are connected in parallel with each other, and each of the first LED series connection portions **18**A consists of **65** first LED modules **17**A.

As shown in FIG. **19**, the second LED modules **17**B are connected in series to form a second LED series connection portion **18**B. The second LED series connection portion **18**B and the first LED series connection portion **18**A are connected in parallel with each other.

The number of the second LED modules **17**B constituting the second LED series connection portion **18**B is larger than the number of the first LED modules **17**A constituting the first LED series connection portion **18**A (**65** in this embodiment) and may be **69**, for example. Four diodes D**1**-D**4** constituting a bridge rectifier circuit are connected to the first LED series connection portions **18**A and the second LED series connection portion **18**B.

The circuit structure shown in FIG. **19** is achieved by the wiring of a predetermined pattern on the substrate **2** structured as a multi-layer substrate.

In the use of the LED lamp A**10** having the above-described structure, when an AC voltage is applied to the circuit shown in FIG. **19**, a full-wave rectified current in the forward direction flows to all the LED modules **1** (the first LED modules **17**A and the second LED modules **17**B). Since the first LED modules **17**A are so arranged that a plurality of series connection portions consisting of the same number of first LED modules **17**A are connected in parallel with each other, their electrical conditions (drop voltage, current and power consumption) are the same, so that the LED modules emit light uniformly. When each first LED series connection portion **18**A consists of 65 first LED modules **17**A, the drop voltage, current and power consumption of each first LED module **17**A may be about 3 V, about 20 mA and about 60 mW, respectively. In this case, the drop voltage at the first LED series connection portion **18**A is about 195 V.

Since the second LED series connection portion **18**B is connected in parallel with the plurality of first LED series connection portion **18**A, the drop voltage at the second LED series connection portion **18**B is equal to that of the first LED series connection portion **18**A. When the second LED series connection portion **18**B consists of 69 second LED modules **17**B, the drop voltage, current and power consumption of each second LED module **17**B may be about 2.7 V, about 10 mA and about 27 mW, respectively.

According to this embodiment, to reduce the interval between adjacent LED modules **1** by increasing the total number of the LED modules, both the first LED modules **17**A and the second LED modules **17**B are increased. This suppresses the increase of power consumption of the entire LED lamp A**10**, as compared with the case where only the number of the first LED modules **17**A is increased.

Since the current consumption of the second LED modules **17**B is smaller than that of the first LED modules **17**A, the brightness of the second LED modules is also lower. However, as described above with reference to FIG. **18**, the interval P**2** between the second LED module **17**B and the first LED modules **17**A is smaller than the interval P**1** between adjacent two first LED modules **17**A. This arrangement efficiently reduces the non-uniformity of brightness as compared with the case where all the LED modules **1** (the first LED modules **17**A and the second LED modules **17**B) are arranged at equal intervals.

Further, as described above, all the first LED modules **17**A are under the same electrical conditions and hence emit light uniformly. This is suitable for reducing the non-uniformity of brightness of the LED lamp A**10**.

The LED lamp of the present invention is not limited to the foregoing embodiment. The specific structure of each part of the LED lamp according to the present invention can be varied in design in many ways.

Although the LED modules **1** are mounted on the substrate **2** in the foregoing embodiment, the substrate may be dispensed with. For instance, a heat dissipation member extending in the longitudinal direction of the LED lamp may be provided, and LED modules may be mounted on the heat dissipation member via an insulating film.

FIGS. **20** and **21** show an LED lamp according to an eleventh embodiment of the present invention. The LED lamp A**11** of this embodiment includes a heat dissipation member **4**, an insulating layer **44**, metal wiring layers **45**A-**45**B, LED modules **1** and bases **82**. The LED lamp A**11** of this embodiment is accommodated in a cylindrical case not shown, and is used as attached to a general-use fluorescent lighting fixture, e.g. as a substitute for a fluorescent lamp.

The heat dissipation member **4** supports the LED modules **1** mounted, on it and dissipates the heat generated at the LED modules **1**. The heat dissipation member **4** is made of e.g. Al and substantially in the form of a thin elongated plate extending in a predetermined direction. The heat dissipation member **4** has a flat upper surface **4***a*. A plurality of recesses **42** are formed on the side surfaces of the heat dissipation member **4**. The recesses **42** extend throughout the entire length of the heat dissipation member **4** in the longitudinal direction of the heat dissipation member **4**. The recesses **42** are provided for increasing the surface area of the heat dissipation member **4**. The recesses **42** can be formed by making the heat dissipation member **4** by using a mold having projections. The heat dissipation member **4** is further formed with a plurality of through-holes **41** penetrating the heat dissipation member **4** in the longitudinal direction. The through-holes **41** are also provided for increasing the surface area of the heat dissipation member **4**.

An insulating layer **44** is laid on the upper surface **4***a* of the heat dissipation member **4**. The insulating layer **44** electrically insulates the heat dissipation member **4** from the metal wiring layers **45**A, **45**B. The insulating layer **44** is made of e.g. SiO_2. The thickness of the insulating layer **44** is e.g. about 100 μm. The insulating layer **44** can be formed by CVD or PVD represented by sputtering.

The insulating layer **44** has a wiring pattern made of e.g. Cu on the upper surface **44***a*. The wiring pattern is made of metal wiring layers **45**A and **45**B spaced from each other. The metal wiring layers **45**A and **45**B are laid on the upper surface **44***a* of the insulating layer **44**. The metal wiring layers **45**A and **45**B are obtained by forming a film of Cu on the upper surface **44***a* of the insulating layer **44** and then etching the film. The metal wiring layers **45**A and **45**B are covered with a protective layer **46**. The metal wiring layers **45**A and **45**B are electrically insulated from the heat dissipation member **4** by the insulating layer **44**.

The LED modules **1** are supported by the heat dissipation member **4**. Each of the LED modules **1** includes an LED bare chip **11**, leads **13**A-**13**B made of metal and spaced from each other, a wire **14** and a resin package **12**. As shown in FIG. **20**, the LED modules **1** are arranged side by side in the longitudinal direction of the heat dissipation member **4**. Each of the LED modules **1** is placed such that the main light emission direction of the LED bare chip **11** is perpendicular to the upper surface **4***a* of the heat dissipation member **4**.

For instance, the LED bare chip **11** has a lamination structure made up of an n-type semiconductor, a p-type semicon-

ductor, and an active layer sandwiched between these (none of these are shown). When the LED bare chip **11** is made of a GaN-based semiconductor, it emits blue light.

The LED bare chip **11** is provided with two electrodes. These electrodes are formed on the lower surface and the upper surface of the LED bare chip **11**. The LED bare chip **11** is mounted on the obverse surface of the lead **13**A. The reverse surface of the lead **13**A is bonded to the metal wiring layer **45**A. Thus, the electrode on the lower surface of the LED bare chip **11** is electrically connected to the metal wiring layer **45**A. The electrode on the upper surface of the LED bare chip **11** is connected to the lead **13**B via the wire **14**. The lead **13**B is bonded to the metal wiring layer **45**B. Thus, the electrode on the upper surface of the LED bare chip **11** is electrically connected to the metal wiring layer **45**B.

The resin package **12** protects the LED bare chip **11** and the wire **14**. The resin package **12** is made of e.g. silicone resin that transmits light emitted from the LED bare chip **11**. In the case where the resin package **12** contains a fluorescent material that emits yellow light when excited by blue light, white light is emitted from the LED module **1**. Instead of the fluorescent material that emits yellow light, a fluorescent material that emits green light and a fluorescent material that emits red light may be mixed in the resin package.

The bases **82** are attached to the ends of the heat dissipation member **4** spaced in the longitudinal direction and include terminals **85**. Each of the terminals **85** is electrically connected to the metal wiring layer **45**A or **45**B. By fitting each terminal **85** into the inlet port of the fluorescent lighting fixture, electric power is supplied to the LED modules **1**, whereby the LED bare chips **11** are turned on.

The advantages of the LED lamp A**11** are described below.

According to this embodiment, when the LED lamp A**11** is turned on, heat is generated at the LED bare chip **11**. The heat generated at the LED bare chip **11** is transferred to the metal wiring layer **45**A through the lead **13**A. The heat transferred to the metal wiring layer **45**A is transferred to the heat dissipation member **4** through the insulating layer **44**. Since the heat dissipation member **4** has a large contact area with the outside due to the provision of recesses **42** and through-holes **41**, the heat transferred to the heat dissipation member is quickly dissipated to the outside.

Thus, with the structure of the LED lamp A**11**, the heat generated at the LED bare chips **11** is efficiently transferred to the heat dissipation member **4**, and the heat transferred to the heat dissipation member **4** is further dissipated efficiently to the outside air. Thus, the LED lamp A**11** prevents the temperature of the LED modules **1** from increasing excessively, so that the LED lamp is unlikely to break, and hence provides stable illumination.

Further, in the LED lamp A**11**, the heat dissipation member **4** serves also as a substrate for mounting the LED modules **1**. Thus, a substrate for mounting LED modules **1** does not need to be provided in addition to the heat dissipation member **4**, which leads to the reduction of the cost for the parts.

FIG. **22** illustrates an LED lamp according to a twelfth embodiment of the present invention. Unlike the LED lamp A**11** in which the LED bare chip **11** is electrically connected to the metal wiring layer **45**A via the lead **13**A, the LED lamp A**12** of this embodiment is structured such that the LED bare chip **11** is directly mounted on and electrically connected to the metal wiring layer **45**A.

In this embodiment, the LED bare chip **11** is directly bonded onto the metal wiring layer **45**A without the intervention of the lead **13**A. The wire **14** connected to the electrode on the upper surface of the LED bare chip **11** is directly bonded to the metal wiring layer **45**B. The LED bare chip **11** and the wire **14** are covered with e.g. potting resin **12** formed by potting a resin that transmits light such as an epoxy resin.

With the LED lamp A**12** of this embodiment, the heat generated at the LED bare chip **11** is quickly transferred to the metal wiring layer **45**A, and the heat transferred to the metal wiring layer **45**A is transferred to the heat dissipation member **4** through the insulating layer **44**. Thus, as compared with the LED lamp A**11** of the eleventh embodiment in which the heat generated at the LED bare chip **11** is transferred through the lead **13**A, heat is transferred to the heat dissipation member **4** more quickly and efficiently. Thus, the heat dissipation effect is enhanced.

FIG. **23** illustrates an LED lamp according to a thirteenth embodiment of the present invention. The LED lamp A**13** of this embodiment is different from the LED lamps A**11** and A**12** of the eleventh and the twelfth embodiments in that a flexible wiring substrate **24** is provided instead of the insulating layer **44** and the metal wiring layers **45**A, **45**B. In this embodiment, the flexible wiring substrate **24**, which is in the form of a film, is arranged on the upper surface **4***a* of the heat dissipation member **4**.

The flexible wiring substrate **24** is made up of a base film layer **25**, metal wiring layers **26** and **27** spaced from each other, and a cover coat layer **28**, which are integrally laminated into a film shape as a whole. The base film layer **25** is made of e.g. polyimide and functions as an electrical insulating layer. The metal wiring layers **26** and **27** are made of e.g. Cu and function as a wiring pattern. The cover coat layer **28** is made of an electrically insulating material and protects the metal wiring layers **26** and **27**.

The flexible wiring substrate **24** includes a predetermined region **29** where the cover coat layer **28** does not cover the metal wiring layers **26** and **27**. In this region **29**, the metal wiring layers **26** and **27** are exposed to the outside. The portion of the metal wiring layers **26** and **27** exposed to the outside in this region **29** may be used as an external terminal. Further, the LED module **1** is mounted on the metal wiring layers **26** and **27** at portions exposed in the region **29**. That is, as shown in FIG. **23**, the lead **13**A of the LED module **1** is connected to the metal wiring layer **26**, whereas the lead **13**B is connected to the metal wiring layer **27**.

With the LED lamp A**13** of this embodiment, when the LED lamp A**13** is turned on, heat is generated at each LED bare chip **11**. The heat generated at the LED bare chip **11** is transferred to the metal wiring layer **26** of the flexible wiring substrate **24** through the lead **13**A. The heat transferred to the metal wiring layer **26** is transferred to the heat dissipation member **4** through the base film layer **25**. The heat transferred to the heat dissipation member **4** is quickly dissipated to the outside.

Thus, similarly to the above-described LED lamp A**11**, the LED lamp A**13** efficiently transfers the heat generated at the LED bare chips **11** to the heat dissipation member **4** and efficiently dissipates the heat transferred to the heat dissipation member **4** to the outside air. Thus, the LED lamp A**13** has the same advantages as those of the LED lam A**11**. In the LED lamp A**13** again, the LED bare chip **11** may be directly mounted on the metal wiring layer **26**, similarly to the LED lamp A**12**.

A method for manufacturing the LED lamp A**13** is described below with reference to FIGS. **24**-**28**.

First, as shown in FIG. **24**, a heat dissipation member **4** is prepared. Specifically, for instance, a plate-shaped or bar-shaped member made of aluminum is cut into a predetermined size, and recesses **42** are formed by using a mold, whereby the heat dissipation member **4** having the shape illustrated in the figure is obtained.

Then, as shown in FIG. **25**, a base material **24**A as an elongated strip, which is to become a flexible wiring substrate **24**, is prepared. The base material **24**A is in the form of a film in which a plurality of portions to become the flexible wiring substrate **24** are continuously connected to each other. For instance, the base material is wound around a reel **24**B. The base material **24**A has a laminated structure made up of a base film layer **25**, metal wiring layers **26** and **27**, a cover coat layer **28** and is formed with a predetermined wiring pattern comprising the metal wiring layers **26** and **27**.

Then, as shown in FIG. **26**, LED modules **1** are mounted on the base material **24**A. Specifically, in each portion to become a flexible wiring substrate **24**, LED modules **1** are surface-mounted at a predetermined position on the exposed metal wiring layers and **27**. This surface mounting employs reflowing. Specifically, for instance, solder is printed at a predetermined position on the metal wiring layers **26** and **27**, the LED module **1** is then placed on the printed portion, and then the solder is melted by heating in a reflow furnace, whereby the LED module **1** is surface-mounted on the base material **24**A. The base material **24**A after the LED modules **1** are mounted may be wound into a reel.

Then, as shown in FIG. **27**, the base material **24**A is cut at cutting positions CL into the length of the heat dissipation member **4**. The cutting of the base material **24**A may be performed before mounting the LED modules **1** on the base material **24**A.

Then, as shown in FIG. **28**, the flexible wiring substrate **24** obtained by the cutting is bonded to the upper surface **4***a* of the heat dissipation member **4** with e.g. an adhesive. Then, a base **82** provided with terminals **85** is attached to each end of the heat dissipation member **4** in the longitudinal direction. By these process steps, the LED lamp A**13** shown in FIG. **23** is obtained.

In the above-described manufacturing process, the LED modules **1** can be mounted on the flexible wiring substrate **24** after the flexible wiring substrate **24** is bonded to the heat dissipation member **4**. However, since the heat dissipation member **4** is made of Al and is not suitable for reflowing which involves heating at a high temperature, the LED modules **1** are mounted on the flexible wiring substrate **24** before the flexible wiring substrate **24** is bonded to the heat dissipation member **4** in this manufacturing process.

According to the above-described manufacturing process, the use of the flexible wiring substrate **24** facilitates the manufacture of the LED lamp. That is, with the structure of the LED lamp A**11**, the works such as film formation or etching are necessary to form the insulating layer **44** and the metal wiring layers **45**A, **45**B, and the works to form the protective layer **46** is also necessary. In contrast, in the LED lamp A**13** of the thirteenth embodiment, the use of the flexible wiring substrate **24** allows these works to be eliminated, whereby the time and process steps of the manufacturing process are reduced.

The LED lamp according to the present invention is not limited to the foregoing embodiment. The specific structure of each part of the LED lamp according to the present invention can be varied in design in many ways. For instance, the shape of the heat dissipation member **4** is not limited to the above-described ones. The insulating layer **44** does not necessarily need to cover the entire upper surface **4***a* of the heat dissipation member **4**, and part of the upper surface **4***a* of the heat dissipation member **4** may be exposed.

FIGS. **29**-**31** show an LED lamp according to a fourteenth embodiment of the present invention. The LED lamp A**14** of this embodiment includes a substrate **2**, a plurality of LED modules **1**, a heat dissipation member **4**, power supply substrates **5**, a plurality of power supply parts **6**, a light-transmitting cover **8**, auxiliary light source means **7** and a pair of bases **82**. For instance, the LED lamp is used as attached to a general-use fluorescent lighting fixture, as a substitute for a straight-tube fluorescent lamp.

The substrate **2** is made of e.g. glass-fiber-reinforced epoxy resin and has an elongated rectangular shape. A wiring (not shown) is formed at appropriate portions on the surface of the substrate **2**. The substrate **2** is laid on the heat dissipation member **4**, which will be described later, and attached to the heat dissipation member **4** with e.g. screws.

The LED modules **1** are the light source of the LED lamp A**14** and mounted on the upper surface **2***a* of the substrate **2**. The LED modules **1** are arranged side by side at predetermined intervals in the longitudinal direction of the substrate **2** and connected in series by a wiring not shown. As shown in FIGS. **29** and **30**, the LED modules **1** are arranged in the light source region **21** which is a region excluding ends of the substrate **2** spaced in the longitudinal direction. As the LED module **1**, one including e.g. a white LED and packaged for surface mounting is suitably used.

The heat dissipation member **4** is made of e.g. Al and has a long, thin, block-like shape extending in the longitudinal direction of the substrate **2**. As shown in FIG. **31**, the surface of the heat dissipation member **4** is formed with a plurality of recesses **42**, and hence, irregular. The recesses **42** extend substantially along the entire length of the heat dissipation member **4** in the longitudinal direction of the substrate **2**. The recesses **42** can be formed by making the heat dissipation member **4** by using a mold having projections.

Each of the power supply substrates **5** is made of e.g. glass-fiber-reinforced epoxy resin and has an elongated rectangular shape. A wiring (not shown) is formed at appropriate portions on the surface of the power supply substrate **5**. The power supply substrate **5** is attached to the substrate **2** by a plurality of leads **51** made of metal. The leads **51** are provided at ends of the power supply substrate **5** spaced in the longitudinal direction, with one end of each lead fixed to the power supply substrate **5** with solder while the other end of the lead soldered to a pad (not shown) provided on the upper surface **2***a* of the substrate **2**. With this arrangement, the power supply substrate **5** is held spaced from the substrate **2** and the heat dissipation member **4**. The wiring of the substrate **2** and the wiring of the power supply substrate **5** are electrically connected to each other via the leads **51**.

The power supply parts **6** function as a power supply circuit for lighting the LED modules **1** and auxiliary LED modules **71**, which will be described later, and are mounted on opposite surfaces (the upper surface **5***a* and the lower surface **5***b*) of each power supply substrate **5**. The power supply parts **6** include an AC/DC converter **61**, and other functional parts **62** such as a capacitor and a resistor, and are structured such that alternating current supplied from a commercial power supply is converted into a constant direct current and supplied to the LED modules **1** and the auxiliary LED modules **71**, which will be described later. The AC/DC converter **61** is larger and occupies a larger area than other parts mounted on the power supply substrate **5**.

The power supply parts **6** and the power supply substrates **5** on which the power supply parts **6** are mounted are arranged at power supply regions **22** positioned at ends of the substrate **2** spaced in the longitudinal direction.

The light-transmitting cover **8** accommodates the substrate **2**, the heat dissipation member **4** and the power supply substrates **5**. As shown in FIG. **31**, the light-transmitting cover is in the form of a straight tube having a circular cross section. The inner surface of the light-transmitting cover **8** is inte-

grally formed with a pair of projections **81** that project inward. Each of the projections **81** is deviated downward (in the radial direction) from the center axis O**1** of the light-transmitting cover **8**, projects within a plane parallel to the center axis O**1**, and extends in the direction along the center axis O**1**. The light-transmitting cover **8** having this structure is formed as a single-piece member by extrusion of a synthetic resin such as polycarbonate.

The widths of the substrate **2** and the heat dissipation member **4** and the dimension of the heat dissipation member **4** in the vertical direction are determined so that the substrate **2** and the heat dissipation member **4** having the above-described structure are accommodated in a space below the projections **81** in FIG. **31**. In the accommodation state shown in FIG. **31**, the movement of the substrate **2** relative to the light-transmitting cover **8** in a direction perpendicular to the center axis O**1** (upward direction in the figure) is restricted by the contact of the upper surface **2***a* with the projections **81**. The bottom of the heat dissipation member **4** is held in contact with the inner surface of a lower portion of the light-transmitting cover **8**.

The substrate **2** is located at a position deviated from the center axis O**1** of the light-transmitting cover **8** in a direction opposite to the upper surface **2***a*, whereas the power supply substrate **5** is located adjacent to the center axis O**1** of the light-transmitting cover **8**. In this way, the power supply substrate **5** is located closer to the center axis O**1** than the substrate **2** is. This allows the width of the power supply substrate **5** to be dimensioned larger than that of the substrate **2**. The accommodation of the substrate **2**, the heat dissipation member **4** and the power supply substrates **5** in the light-transmitting cover **8** is performed by inserting the substrate **2** and the heat dissipation member **4** into the space below the projections **81** in the light-transmitting cover **8** by sliding movement.

The auxiliary light source means **7** is provided for emitting light to the outside from the area of the light-transmitting cover **8** that corresponds to the power supply region **22**, and includes a plurality of auxiliary LED modules **71** and a light guide **72**. Herein, "the area of the light-transmitting cover **8** that corresponds to the power supply region **22**" refers to the area, of the light-transmitting cover **8**, that is located above the substrate **2** and that substantially overlaps the power supply region **22** in the longitudinal direction of the light-transmitting cover **8**.

The plurality of auxiliary LED modules **71** are mounted on the upper surface **2***a* of the substrate **2**. Specifically, the auxiliary LED modules **71** are provided at the power supply region **22** of the substrate **2** and arranged at predetermined intervals in the longitudinal direction of the substrate **2** at a position close to edges of the substrate **2** spaced in the width direction. The auxiliary LED modules **71** have lower power consumption than the LED modules **1** and serve as the auxiliary light source of the LED lamp A**14**. As the auxiliary LED module **71**, one including e.g. a white LED and packaged for surface mounting is suitably used, similarly to the LED module **1**.

The light guide **72** is provided for efficiently guiding the light from the auxiliary LED modules **71** to the light-transmitting cover **8**. The light guide comprises a member with a high transparency made of an acrylic resin such as PMMA (polymethyl methacrylate). The light guide member **72** is generally cylindrical and arranged inside the light-transmitting cover **8** at a position corresponding to the power supply region **22**. The light guide member **72** is made by e.g. injection molding using a mold and includes light introducing portions **721** and a light emitting portion **722**, as shown in FIGS. **30** and **31**. The circumferential surfaces of the light introducing portions **721** and the light emitting portion **722** are a smooth mirror surface.

The light introducing portions **721** are provided for introducing the light from the auxiliary LED modules **71** into the light guide **72**. The end surfaces that face the auxiliary LED modules **71** are light incident surfaces **721***a*. In this embodiment, the light introducing portions **721** are appropriately curved and arranged to be connected to ends of the light emitting portion **722** spaced in the circumferential direction. The circumferential surface of the light introducing portions **721** except the light incident surfaces **721***a* is coated with e.g. a white paint so that light entering the light introducing portions **721** is prevented from leaking to the outside.

The light emitting portion **722** is in the form of a part of a cylinder that is uniform in the longitudinal direction along the center axis O**1** of the light-transmitting cover **8**. The light emitting portion includes alight reflection surface **722***a* formed on the inner side and a light emitting surface **722***b* formed on the outer side. The light reflection surface **722***a* reflects the light traveling through the light introducing portion **721** toward the light emitting surface **722***b* facing the light reflection surface **722***a*. The light reflection surface is e.g. coated with a white paint, thereby having a function to scatter and reflect light. The light emitting surface **722***b* emits the light reflected at the light reflection surface **722***a* toward the light-transmitting cover **8**. The light emitting surface is substantially held in close contact with the inner surface of the light-transmitting cover **8**. As the light reflection surface **722***a*, a rough surface with minute irregularities may be employed instead of a surface coated with a white paint. In this case, the rough surface with minute irregularities may be obtained by molding the light guide **72** using a mold that is partially grained or by performing blasting with respect to a predetermined portion after molding.

Each portion of the light guide **72** having the above-described structure is dimensioned such that the light guide can be accommodated in a space above the projections **81** in the light transmitting cover **8** shown in FIG. **31**. In the accommodation state shown in FIG. **31**, the movement of the light guide **72** relative to the light-transmitting cover **8** in a direction perpendicular to the center axis O**1** (downward direction in the figure) or in the circumferential direction of the light-transmitting cover **8** is restricted by the contact of the light introducing portions **721** with the projections **81**. The accommodation of the light guide **72** in the light-transmitting cover **8** is performed by inserting the light guide **72** into the space above the projections **81** in the light-transmitting cover **8** by sliding movement.

The paired bases **82** are the portions to be fitted to the sockets of a fluorescent lighting fixture for electric power supply from a commercial AC power supply. As shown in FIG. **30**, each base **82** includes a cover **83** in the form of a bottomed cylinder, a resin block **84** held in a hollow portion of the cover **83**, and two terminals **85**. The resin block **84** is formed with a recess **84***a*. An end of the heat dissipation member **4** in the longitudinal direction is fitted in the recess **84***a*, whereby the base **82** is attached to the heat dissipation member **4**. Thus, in the LED lamp A**14**, the heat dissipation member **4** is supported by the paired bases **82**.

Between the cover **83** and the resin block **84** is defined a gap in the form of part of a cylinder. In the state in which the base **82** is attached to the heat dissipation member **4**, one of the ends of the light-transmitting cover **8** spaced in the longitudinal direction is received in this gap. The terminal **85** penetrates the cover **83** and the resin block **84**. An end (outer end) of the terminal **85** is to be inserted into an inlet port of the

socket of a fluorescent lighting fixture, whereas the other end of the terminal **85** is electrically connected to the wiring of the substrate **2**.

The advantages of the LED lamp A**14** having the above-described structure are described below.

To use of the LED lamp A**14**, electric power is supplied, with the terminals **85** of the bases **82** fitted into the inlet ports of the sockets of a fluorescent lighting fixture, whereby the LED modules **1** and the auxiliary LED modules **71** are turned on.

As noted before, the LED lamp A**14** of the present embodiment includes auxiliary light source means **7** for emitting light to the outside from the area of the light-transmitting cover **8** that corresponds to each power supply region **22**. Thus, during the use of the LED lamp A**14**, light is emitted not only from the area corresponding to the light source region **21** of the light-transmitting cover **8** but also from the are corresponding to the power supply region **22** of the light-transmitting cover **8**. Thus, the LED lamp A**14** prevents degradation of illumination quality due to the presence of the power supply region **22**.

In the preset embodiment, the auxiliary light source means **7** includes a plurality of auxiliary LED modules **71** and the light guide **72**, and the auxiliary LED modules **71** are arranged in the power supply region **22** of the substrate **2**. This arrangement ensures that light efficiently reaches also the area of the light-transmitting cover **8** that corresponds to the power supply region **22**. Further, with the provision of the light guide **72**, light from the auxiliary LED modules **71** is uniformly emitted to the outside from the area of the light-transmitting cover **8** that corresponds to each power supply region **22** through the light guide **72**. This is suitable for preventing degradation of illumination quality of the LED lamp A**14**.

The light emitting portion **722** of the light guide **72** has the light reflection surface **722***a* that reflects the light from the auxiliary LED modules **71** introduced through the light introducing portions **721** toward the light emitting surface **722***b*. Thus, the light traveling within the light guide **72** is reflected by the light reflection surface **722***a* to efficiently travel to the light emitting surface **722***b*. Since the light reflection surface **722***a* has a function to scatter and reflect light, a uniform amount of light is emitted from each portion of the light emitting surface **722***b*. This is suitable for preventing degradation of illumination quality of the LED lamp A**14**.

In this embodiment, the power supply parts **6** are mounted on opposite surfaces (the upper surface **5***a* and the lower surface **5***b*) of the power supply substrate **5**. Thus, as compared with the structure in which the power supply parts **6** are mounted only on e.g. the upper surface **5***a* of the power supply substrate **5**, the power supply parts **6** are mounted with a higher efficiency, so that the area of the power supply substrate **5** can be made smaller. Accordingly, the dimension of the power supply substrate **5** in the longitudinal direction along the center axis O**1** of the light-transmitting cover **8** can be made smaller. This allows reduction of the area of the power supply region **22** in the substrate **2** and hence allows a large area to be secured as the light source region **21**. Thus, with the LED lamp A**14**, the illumination quality is enhanced.

The power supply substrate **5** is positioned closer to the center axis O**1** of the light-transmitting cover **8** than the substrate **2** is. This allows the dimension of the power supply substrate **5** in the width direction perpendicular to the center axis O**1** of the light-transmitting cover **8** to be made larger than that of the substrate **2**. Thus, a power supply substrate **5** having a predetermined area can be achieved with a reduced dimension in the longitudinal direction along the center axis O**1** of the light-transmitting cover **8**. Thus, the power supply region **22** can be further made smaller, which is suitable for enhancing the illumination quality of the LED lamp A**14**.

In this embodiment, the substrate **2** is laid on the heat dissipation member **4**. Thus, heat generated during the lighting of the LED modules **1** and the auxiliary LED modules **71** is effectively dissipated to the outside through the heat dissipation member **4**, whereby deterioration of the LED modules **1** and the auxiliary LED modules **71** is prevented. Moreover, since the heat dissipation member **4** extends substantially along the entire length of the light-transmitting cover **8**, the heat dissipation member functions as a structural material of the LED lamp A**14**. Thus, the provision of the heat dissipation member **4** secures the rigidity of the LED lamp A**14**.

A pair of projections **81** are formed on the inner side of the light-transmitting cover **8**. The movement of the substrate **2** in a direction perpendicular to the center axis O**1** of the light-transmitting cover **8** (radial direction of the light-transmitting cover **8**) is restricted by the contact of the projections **81** with the upper surface **2***a* at the ends of the substrate **2** spaced in the width direction. Further, the movement of the light guide **72** in a direction perpendicular to the center axis O**1** of the light-transmitting cover **8** (radial direction of the light-transmitting cover **8**) or in the circumferential direction of the light-transmitting cover **8** is restricted by the contact of the projections **81** with the light introducing portions **721** of the light guide **72**. Thus, in assembling the LED lamp A**14**, positioning of the substrate **2** and the light guide **72** relative to the light-transmitting cover **8** is achieved just by inserting the substrate **2** and the light guide **72** into the light-transmitting cover **8**. Thus, assembling of the LED lamp A**14** is easy.

FIGS. **32** and **33** illustrate an LED lamp according to a fifteenth embodiment of the present invention. The LED lamp A**15** of this embodiment is different from the LED lamp A**14** of the foregoing embodiment in structure of the auxiliary light source means **7**. The LED lamp A**15** does not include auxiliary LED modules **71**, and is structured to guide the light from the LED modules **1** to an area corresponding to the power supply region **22** of the light-transmitting cover **8** through the light guide **72**. The light guide **72** of this embodiment is made different from that of the foregoing embodiment in many points.

The light introducing portion **721** of the light guide **72** is provided for introducing the light from the LED module **1** located at one of the ends of the substrate **2** spaced in the longitudinal direction into the light guide **72**. The end surface that faces the LED module **71** is a light incident surface **721***a*. The light introducing portion **721** is appropriately curved and arranged to be connected to one of the ends of the light emitting portion **722** spaced in the longitudinal direction. As shown in FIG. **33**, the movement of the light guide **72** relative to the light-transmitting cover **8** in a direction perpendicular to the center axis O**1** (downward direction in the figure) or in the circumferential direction of the light-transmitting cover **8** is restricted by the contact of the end surfaces of the light emitting portion **722** spaced in the circumferential direction with the projections **81**.

According to the LED lamp A**15** of this embodiment, light from the existing LED modules **1** is uniformly emitted to the outside from the area of the light-transmitting cover **8** that corresponds to each power supply region **22** through the light guide **72**. This is suitable for preventing degradation of illumination quality of the LED lamp A**15**. Since the LED lamp A**15** does not require additional LEDs, the power supply circuit constituted of a plurality of power supply parts **6** can be simplified.

FIG. **34** illustrates an LED lamp according to a sixteenth embodiment of the present invention. The LED lamp A**16** of this embodiment is different from the LED lamp A**14** of the foregoing embodiment in structure of the auxiliary light source means **7**. Specifically, the LED lamp A**16** is different from the foregoing embodiment in arrangement of the auxiliary LED modules **71**, and further, does not include a light guide **72**. In this embodiment, the auxiliary LED modules **71** are mounted on the upper surface of the power supply substrate **5** and arranged at predetermined intervals in the longitudinal direction of the power supply substrate **5** at edges of the power supply substrate **5** spaced in the width direction.

In the LED lamp A**16** of this embodiment, light from the auxiliary LED modules **71** mounted on the power supply substrate can be emitted to the outside from an area of the light-transmitting cover **8** that corresponds to the power supply region **22**. Further, as compared with the substrate **2**, the power supply substrate **5** is deviated in the direction (upward in the figure) in which light from the auxiliary modules is mainly emitted to the outside of the light-transmitting cover **8**. Thus, the light emitted from the auxiliary LED modules **71** efficiently reaches also the area of the light-transmitting cover **8** that corresponds to the power supply region **22**.

The invention claimed is:

1. An LED lamp comprising:

a plurality of LED light sources;

a substrate on which the LED light sources are mounted in a row, the substrate including first and second ends spaced from each other in a longitudinal direction of the substrate;

a light guide provided on the substrate for covering the LED light sources;

a light-transmitting cover held in close contact with an entirety of an outer surface of the light guide; and

bases attached to the first and second ends of the substrate, respectively;

wherein the light guide is held in close contact with each of the LED light sources,

wherein the light guide is semicircular in cross section, and

wherein each of the bases includes a pair of terminals each configured to be fitted into an inlet port of a fluorescent lighting fixture.

2. The LED lamp according to claim **1**, further comprising a plurality of heat dissipation members attached to a surface of the substrate that is opposite to a mount surface on which the LED light sources are mounted, wherein the plurality of heat dissipation members are spaced apart from each other in a width direction of the substrate.

3. The LED lamp according to claim **1**, wherein the light guide contains a fluorescent material that emits light of a wavelength different from a wavelength of light from the LED light sources when excited by the light from the LED light sources.

4. The LED lamp according to claim **1**, wherein the LED light source comprises an LED module, the LED module including an LED bare chip and a resin package sealing the LED bare chip.

5. The LED lamp according to claim **1**, wherein the LED light source comprises an LED bare chip mounted on the substrate.

6. The LED lamp according to claim **2**, wherein some of the plurality of heat dissipation members are smaller in length than the rest of the plurality of heat dissipation members.

7. The LED lamp according to claim **6**, wherein the plurality of heat dissipation members are greater in length with nearness to a center of the substrate in the width direction.

* * * * *