US 20160219672A1

(19) United States

(12) Patent Application Publication

(10) Pub. No.: US 2016/0219672 A1

(43) Pub. Date: Jul. 28, 2016

Liu

(54) **LED TUBE LAMP**

(71) Applicant: **JIAXING SUPER LIGHTING ELECTRIC APPLIANCE CO., LTD**, Jiaxing (CN)

(72) Inventor: **Xintong Liu**, Jiaxing (CN)

(21) Appl. No.: **15/066,645**

(22) Filed: **Mar. 10, 2016**

Related U.S. Application Data

(63) Continuation-in-part of application No. 14/865,387, filed on Sep. 25, 2015.

(30) **Foreign Application Priority Data**

Sep. 28, 2014	(CN)	201410507660.9
Sep. 28, 2014	(CN)	201410508899.8
Nov. 6, 2014	(CN)	201410623355.6
Dec. 5, 2014	(CN)	201410734425.5
Feb. 12, 2015	(CN)	201510075925.7
Mar. 10, 2015	(CN)	201510104823.3
Mar. 25, 2015	(CN)	201510133689.X
Mar. 26, 2015	(CN)	201510134586.5
Mar. 27, 2015	(CN)	201510136796.8
Apr. 3, 2015	(CN)	201510155807.7
Apr. 14, 2015	(CN)	201510173861.4
Apr. 22, 2015	(CN)	201510193980.6
May 19, 2015	(CN)	201510259151.3
May 22, 2015	(CN)	201510268927.8
May 29, 2015	(CN)	201510284720.X
Jun. 10, 2015	(CN)	201510315636.X
Jun. 17, 2015	(CN)	201510338027.6
Jun. 26, 2015	(CN)	201510364735.7
Jun. 26, 2015	(CN)	201510372375.5
Jun. 26, 2015	(CN)	201510373492.3
Jun. 29, 2015	(CN)	201510378322.4
Jul. 2, 2015	(CN)	201510391910.1
Jul. 10, 2015	(CN)	201510406595.5
Jul. 20, 2015	(CN)	201510428680.1
Jul. 27, 2015	(CN)	201510448220.5
Aug. 7, 2015	(CN)	201510482944.1
Aug. 8, 2015	(CN)	201510483475.5
Aug. 8, 2015	(CN)	201510486115.0
Aug. 14, 2015	(CN)	201510499512.1
Aug. 26, 2015	(CN)	201510530110.3
Sep. 2, 2015	(CN)	201510555543.4
Sep. 6, 2015	(CN)	201510557717.0
Sep. 18, 2015	(CN)	201510595173.7
Oct. 8, 2015	(CN)	201510645134.3
Oct. 20, 2015	(CN)	201510680883.X

Publication Classification

(51) **Int. Cl.**

H05B 33/08	(2006.01)
F21V 23/00	(2006.01)
F21K 99/00	(2006.01)

(52) **U.S. Cl.**

CPC ***H05B 33/0884*** (2013.01); ***F21K 9/17*** (2013.01); ***F21V 23/009*** (2013.01); ***H05B 33/0809*** (2013.01); *F21Y 2103/003* (2013.01)

(57) **ABSTRACT**

An LED tube lamp is provided herein, which implements the safety function for protecting the user from electric shock since it conducts only when both ends thereof have been correctly installed into a lamp socket. The LED tube lamp includes a lamp tube; two end caps having pin(s) respectively and coupled to both ends of the lamp tube correspondingly for receiving an external driving signal; two rectifying circuits rectifying the external driving signal to produce a rectified signal; a filtering circuit filtering the rectified signal to produce a filtered signal; an LED lighting module receiving the filtered signal to produce a driving signal for the LED tube lamp to emit light; and an installation detection module determining whether cutting off the external driving signal passing through the LED tube lamp, wherein the installation detection module includes a first installation detection terminal and a second installation detection terminal, further, when a current passing through the first and the second installation detection terminals is bigger than or equal to a set current value, the installation detection module conducts; when the current passing through the first and the second installation detection terminals is smaller than the set current value, the installation detection module cuts off.

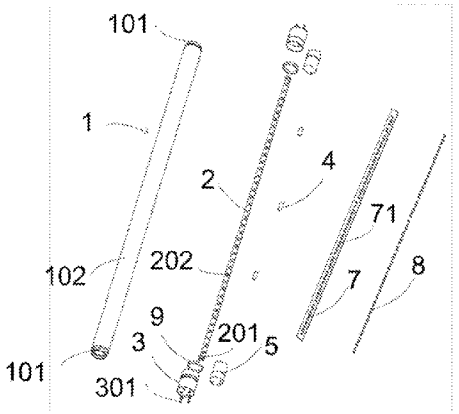

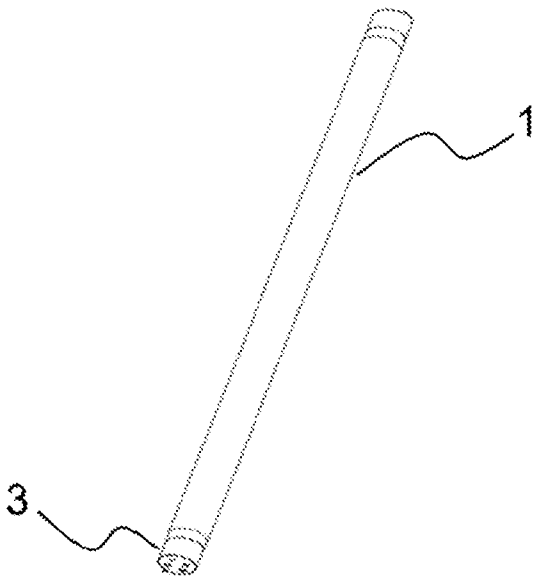

Fig. 1

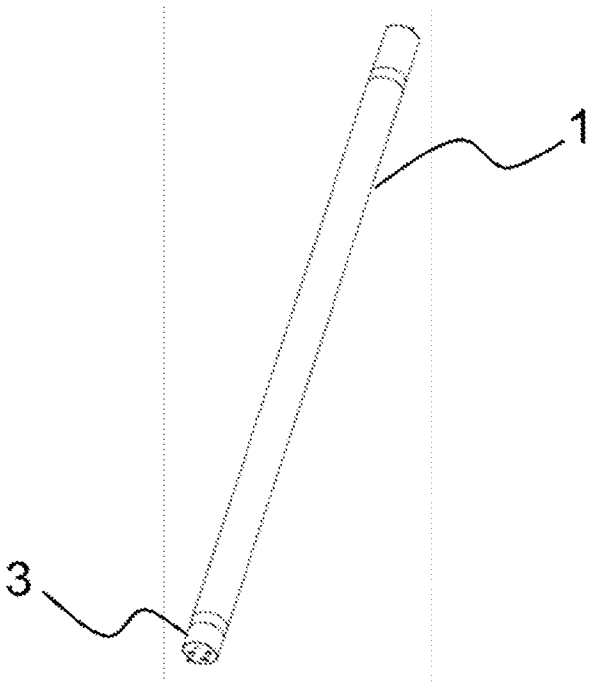

Fig. 1A

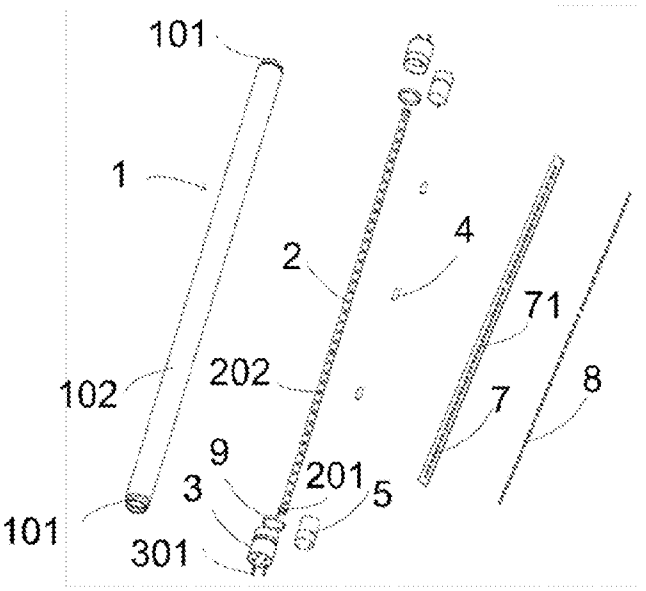

Fig. 2

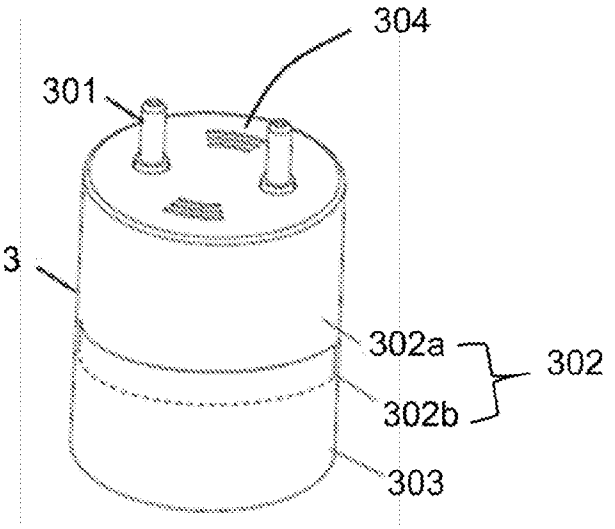

Fig. 3

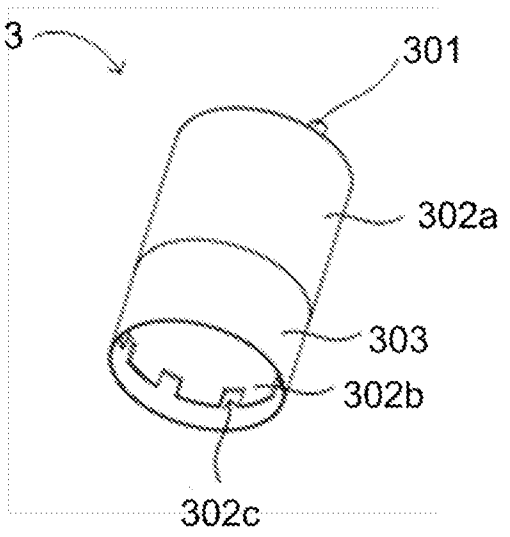

Fig. 4

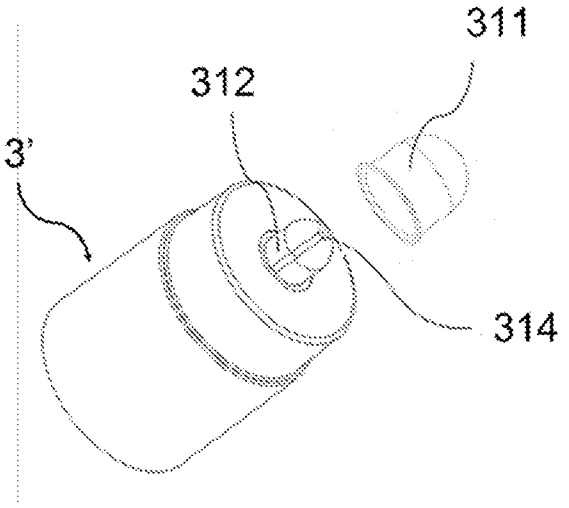

Fig. 5

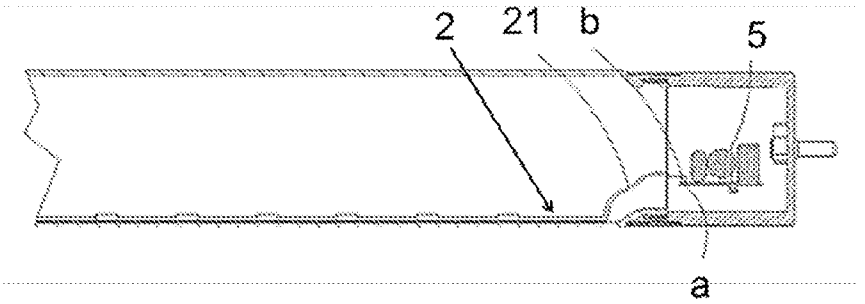

Fig. 6

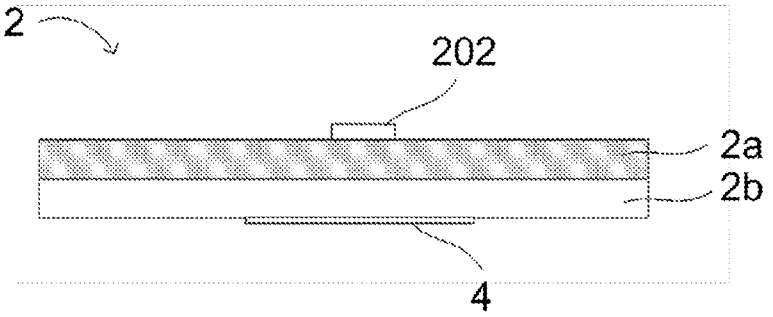

Fig. 7

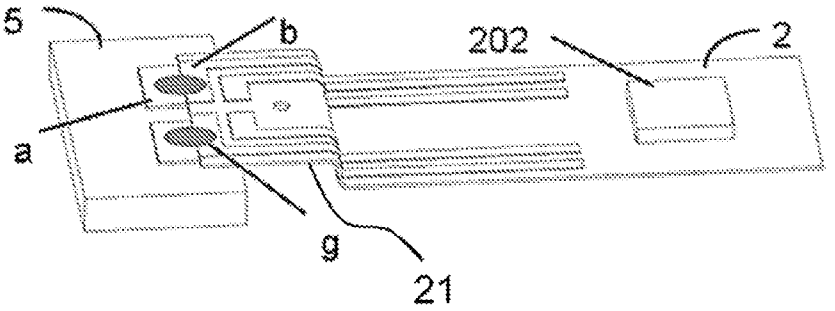

Fig. 8

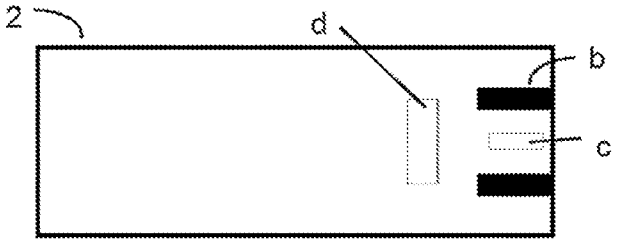

Fig. 9

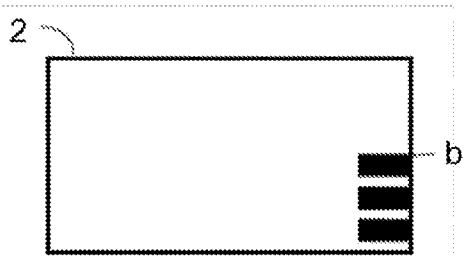

Fig. 10

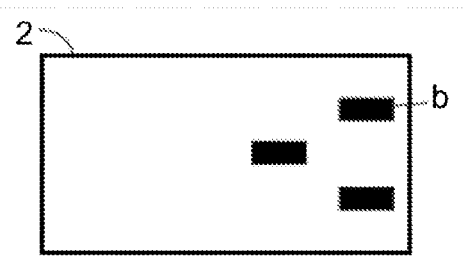

Fig. 11

Fig. 12

Fig. 13

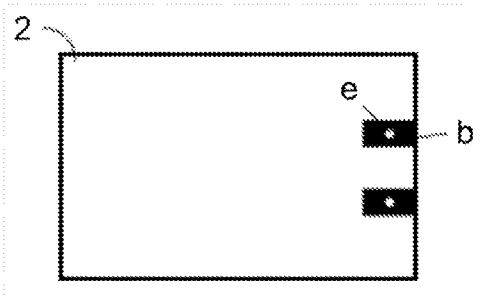

Fig. 14

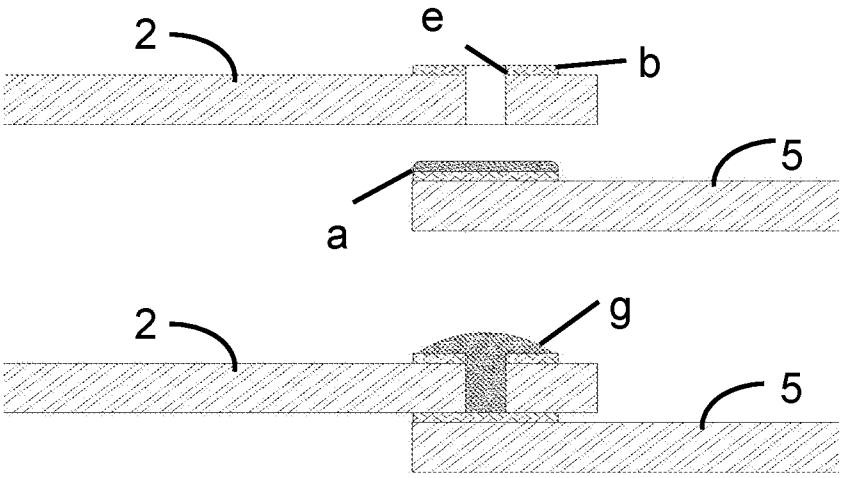

Fig. 15

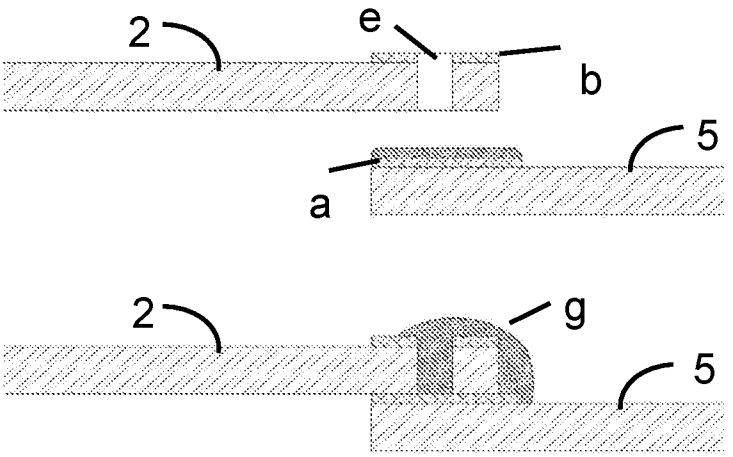

Fig. 16

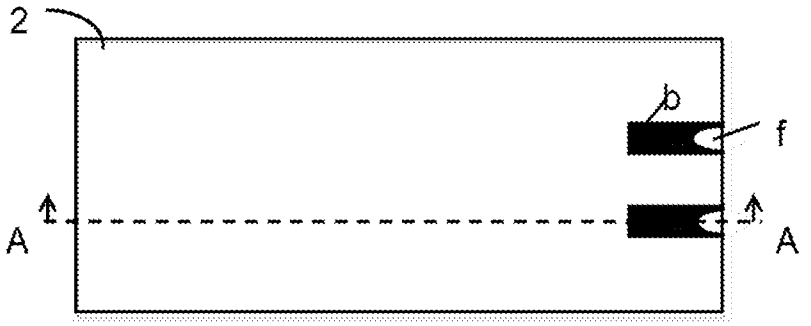

Fig. 17

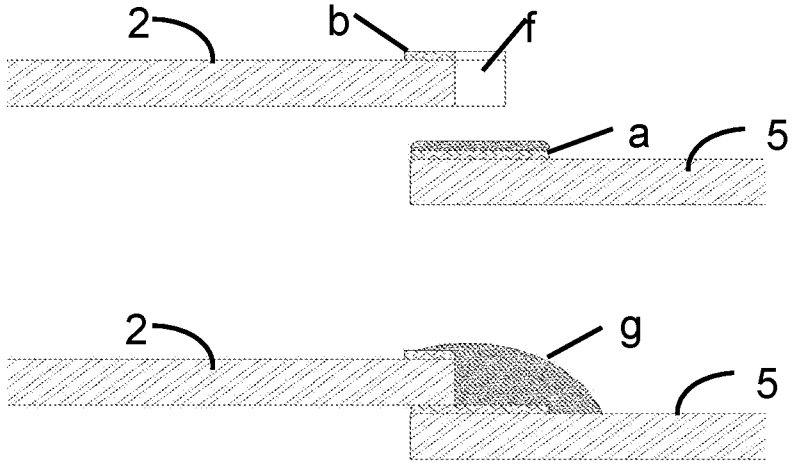

Fig. 18

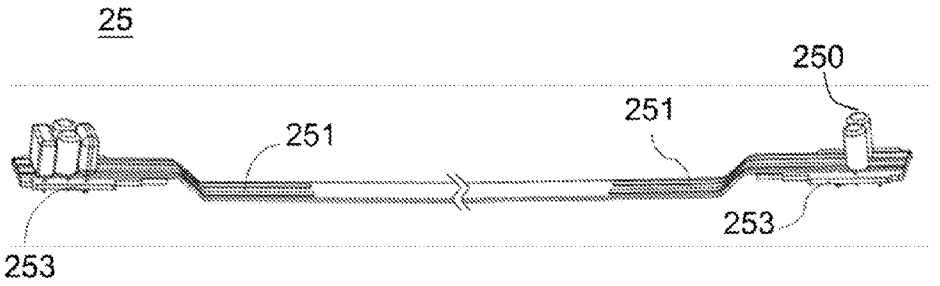

Fig. 19

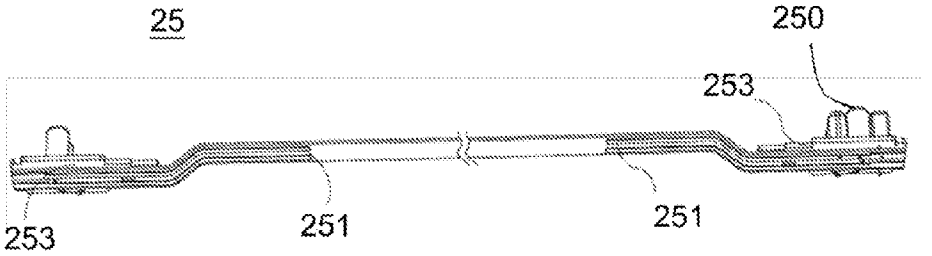

Fig. 20

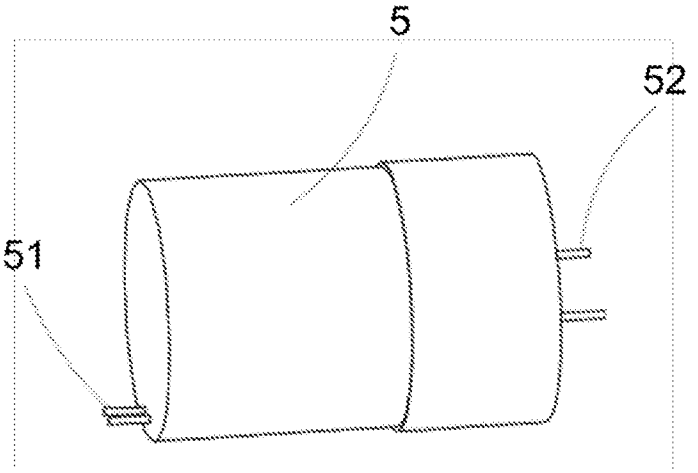

Fig. 21

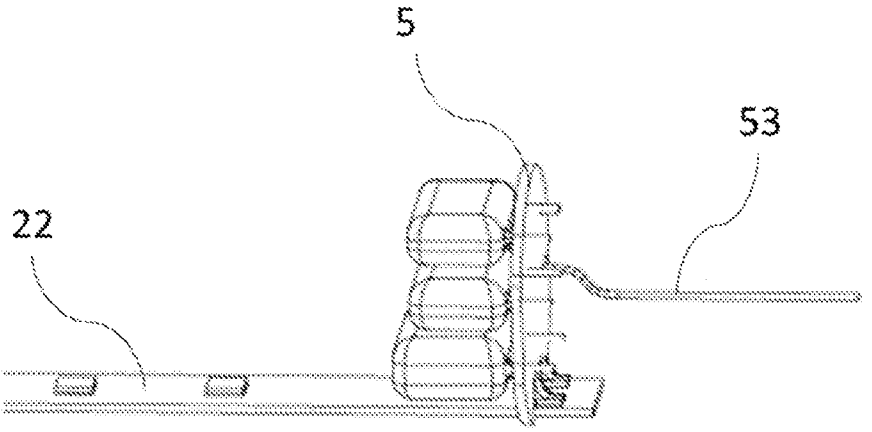

Fig. 22

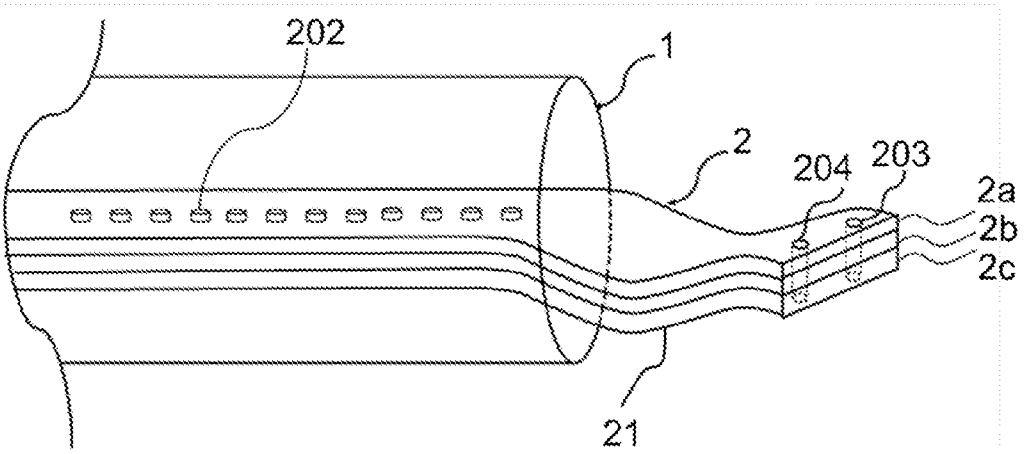

Fig. 23

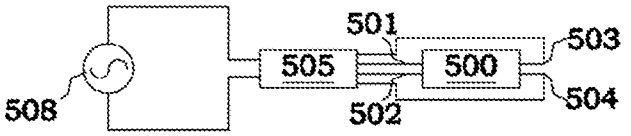

Fig. 24A

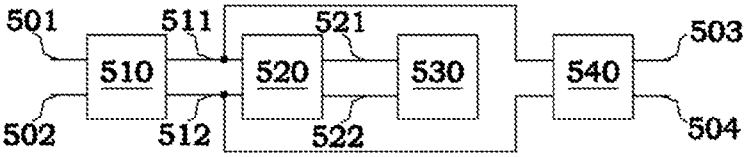

Fig. 24B

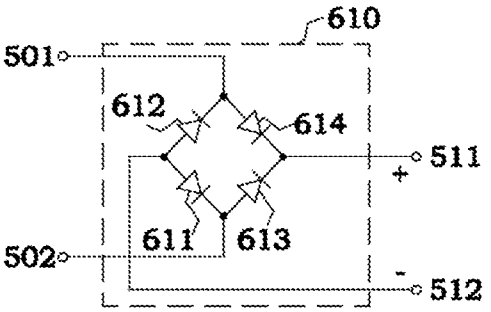

Fig. 25A

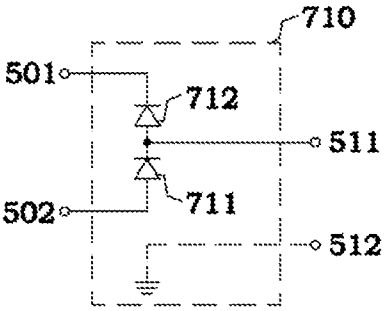

Fig. 25B

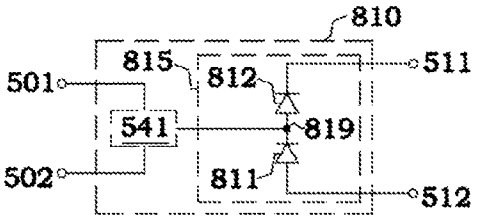

Fig. 25C

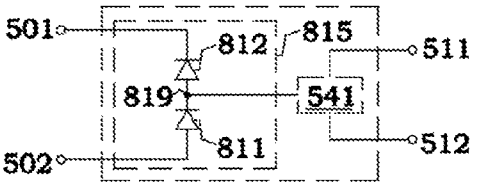

Fig. 25D

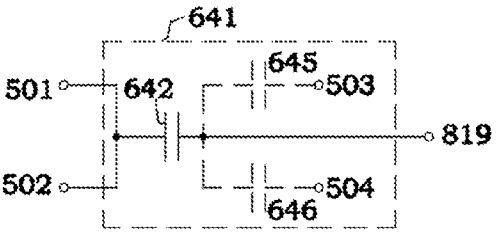

Fig. 26A

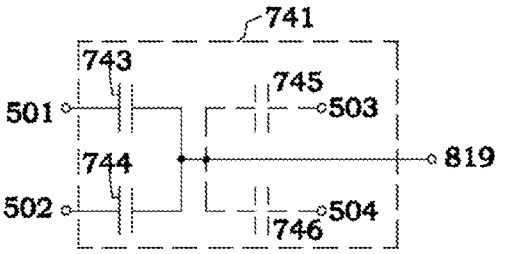

Fig. 26B

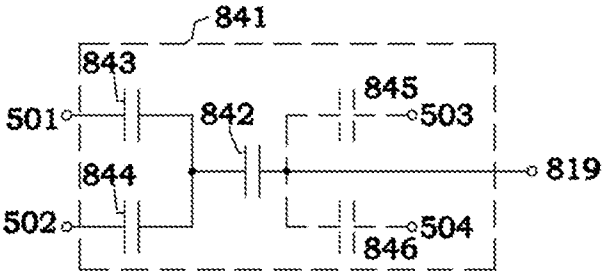

Fig. 26C

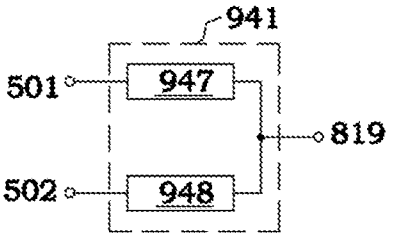

Fig. 26D

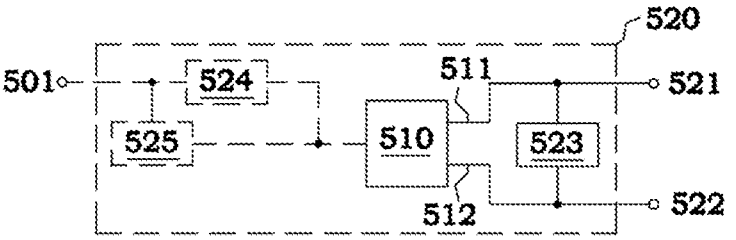

Fig. 27A

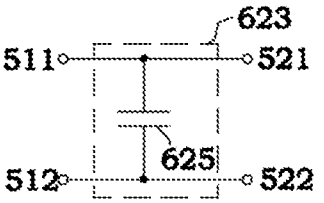

Fig. 27B

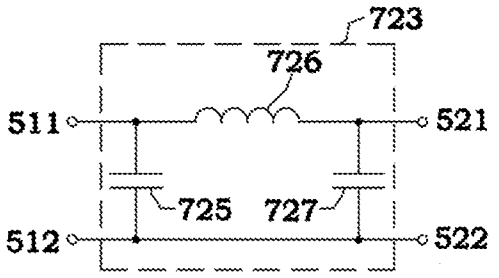

Fig. 27C

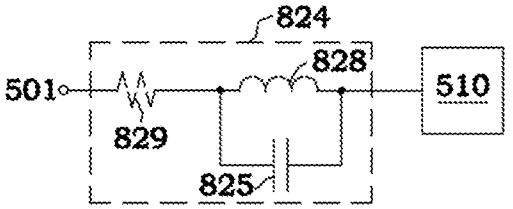

Fig. 27D

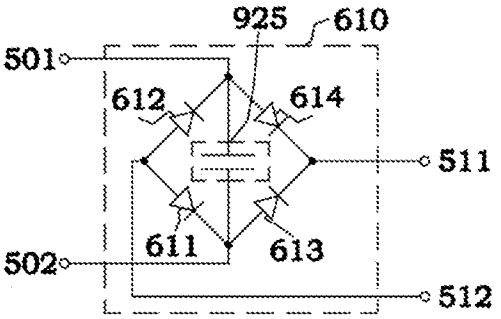

Fig. 27E

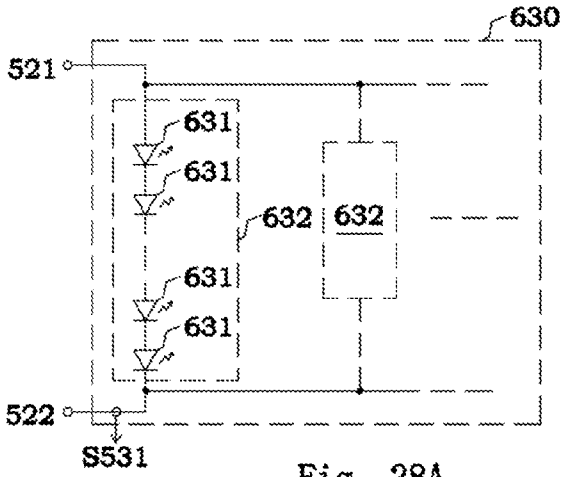

Fig. 28A

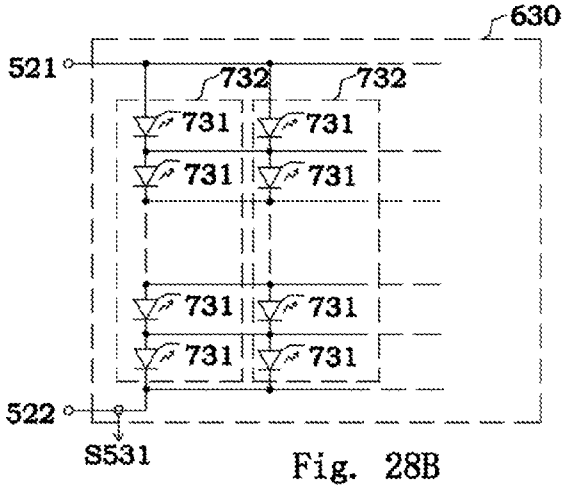

Fig. 28B

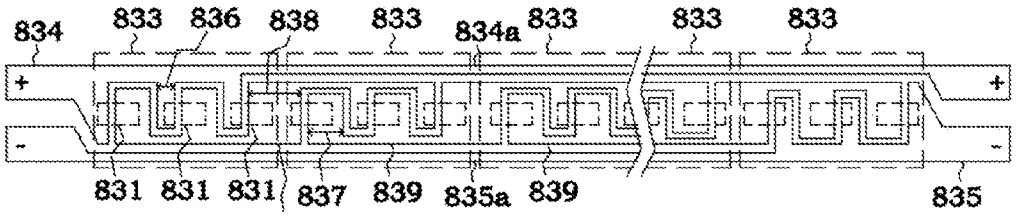

Fig. 28C

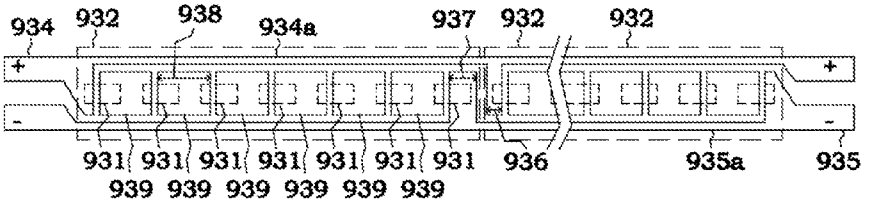

Fig. 28D

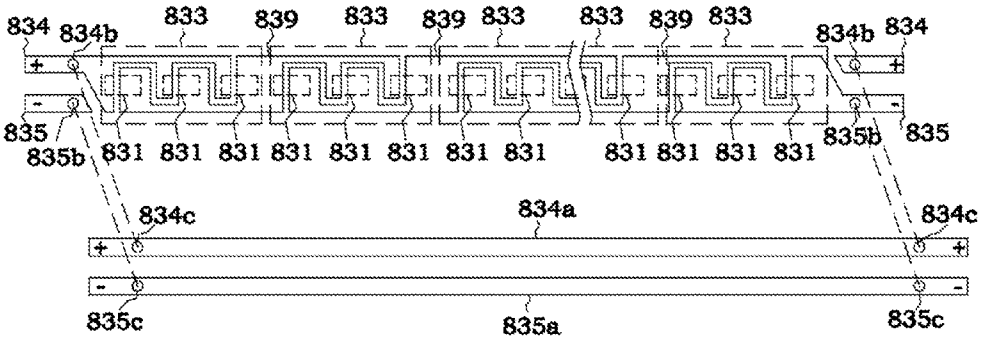

Fig. 28E

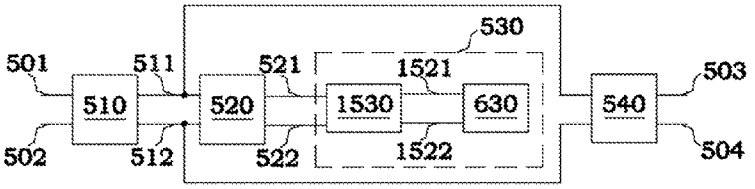

Fig. 29A

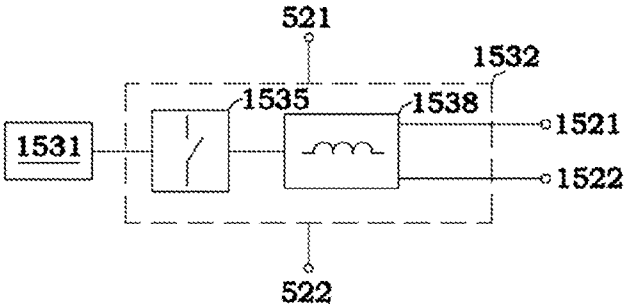

Fig. 29B

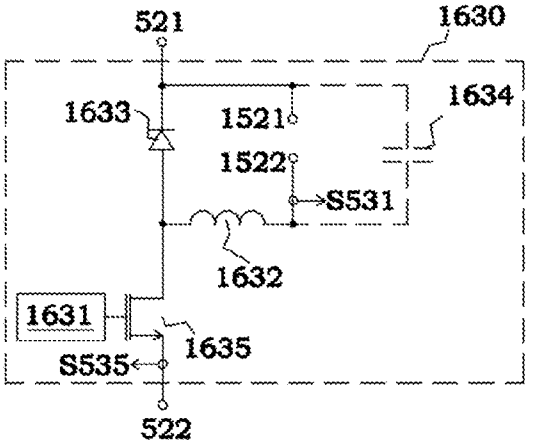

Fig. 29C

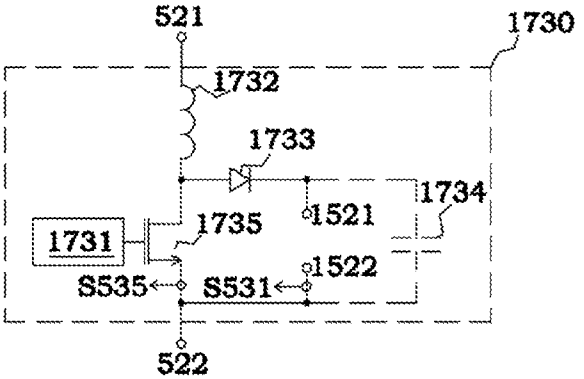

Fig. 29D

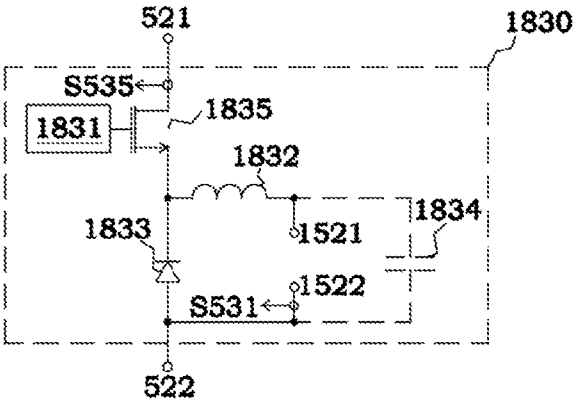

Fig. 29E

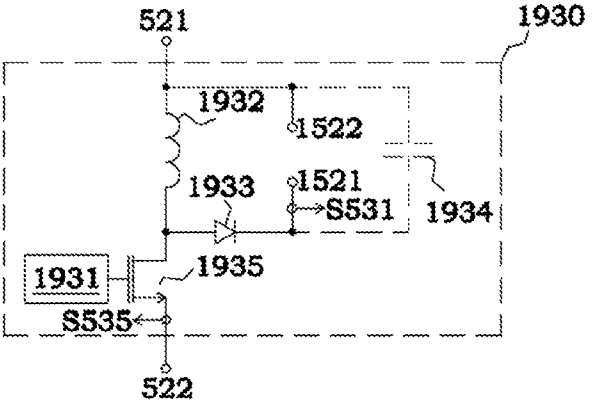

Fig. 29F

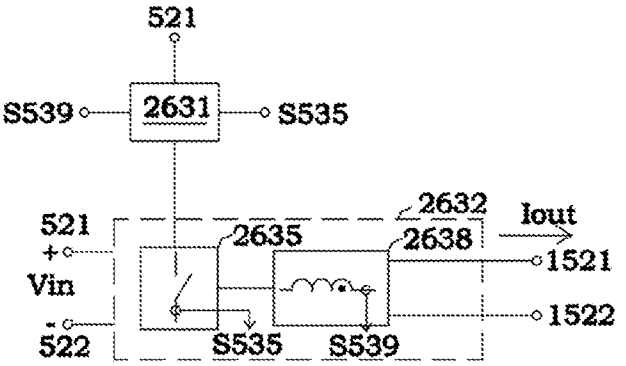

Fig. 29G

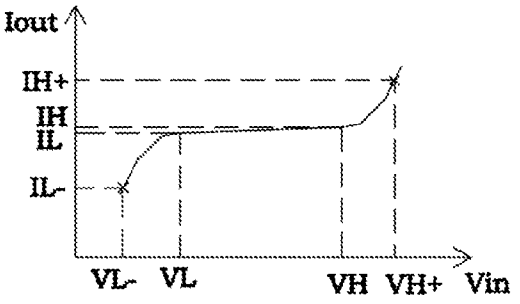

Fig. 29H

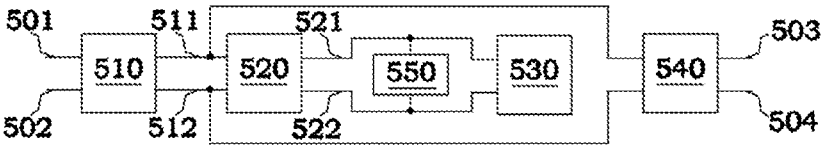

Fig. 30A

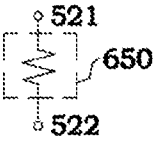

Fig. 30B

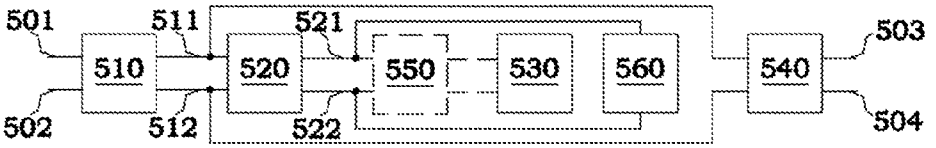

Fig. 31A

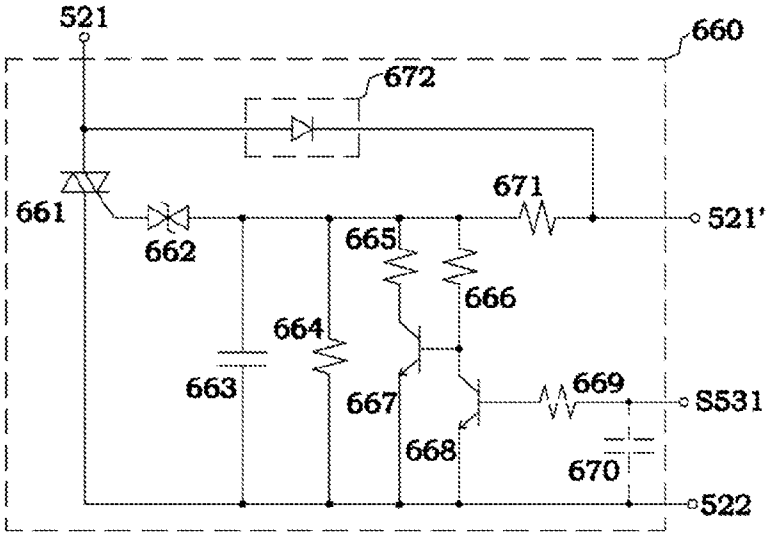

Fig. 31B

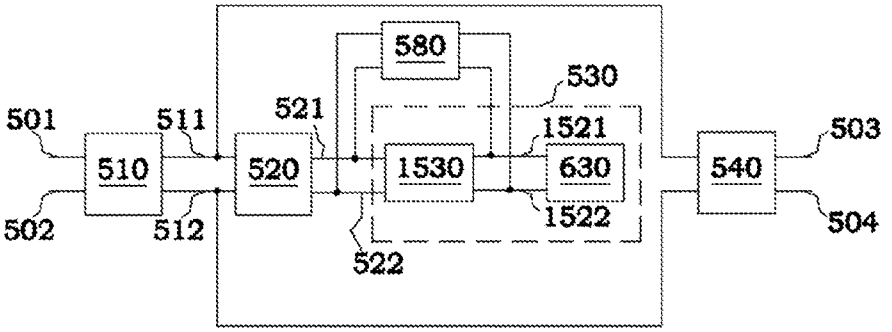

Fig. 32A

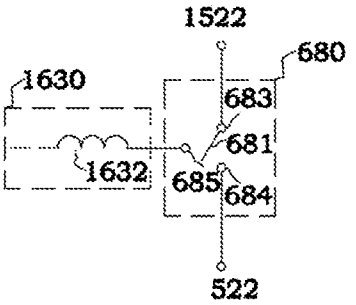

Fig. 32B

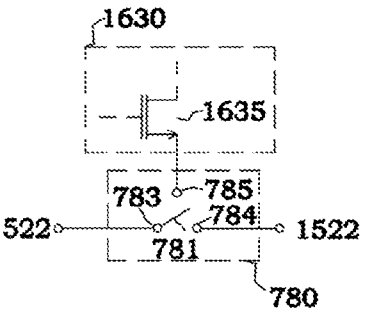

Fig. 32C

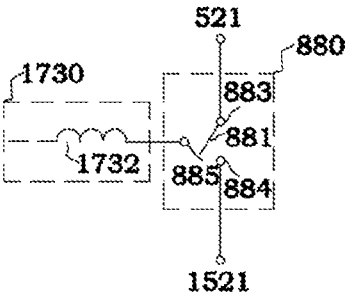

Fig. 32D

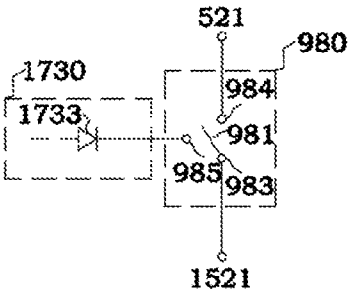

Fig. 32E

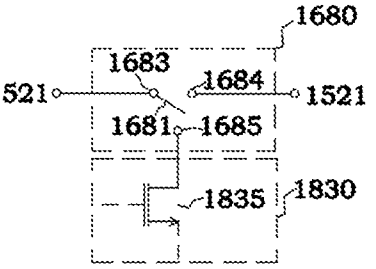

Fig. 32F

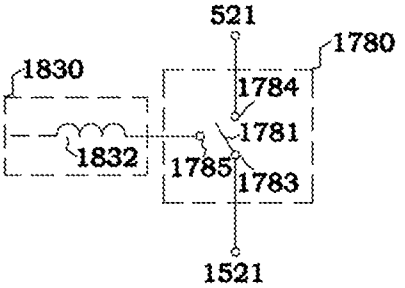

Fig. 32G

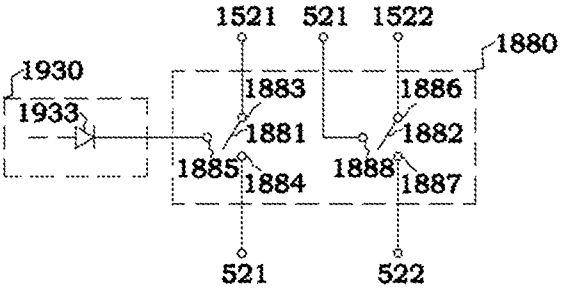

Fig. 32H

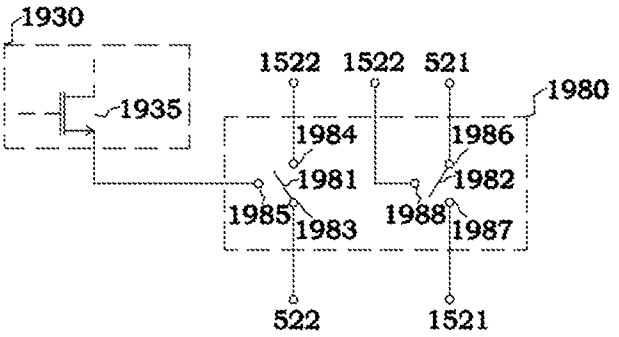

Fig. 32I

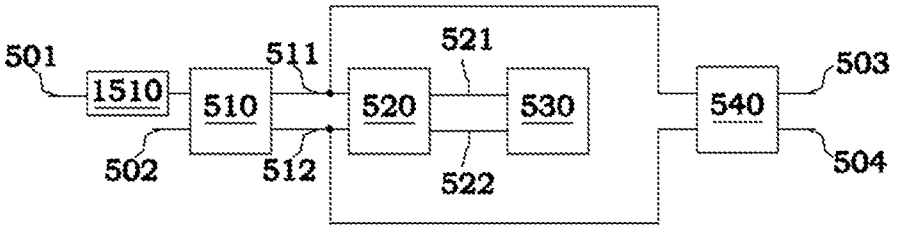

Fig. 33A

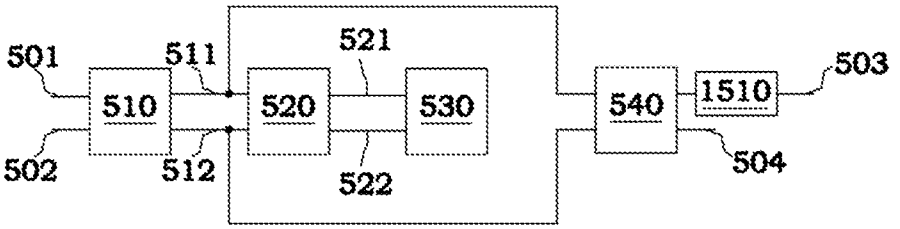

Fig. 33B

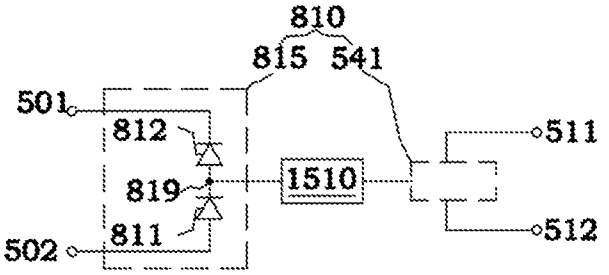

Fig. 33C

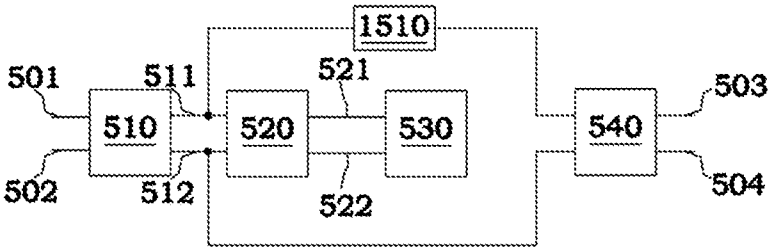

Fig. 33D

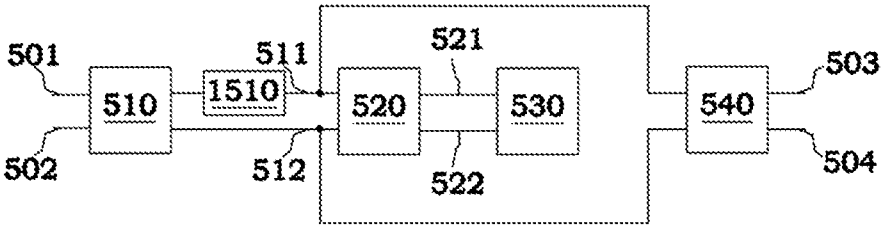

Fig. 33E

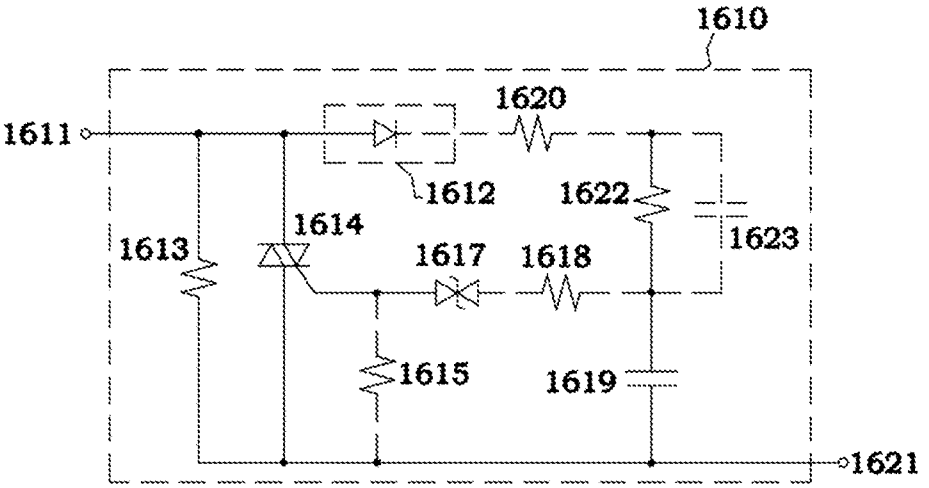

Fig. 33F

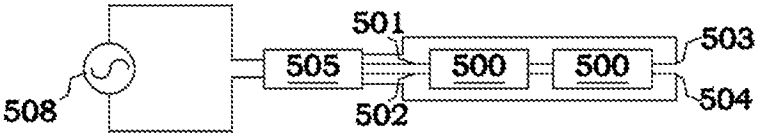

Fig. 33G

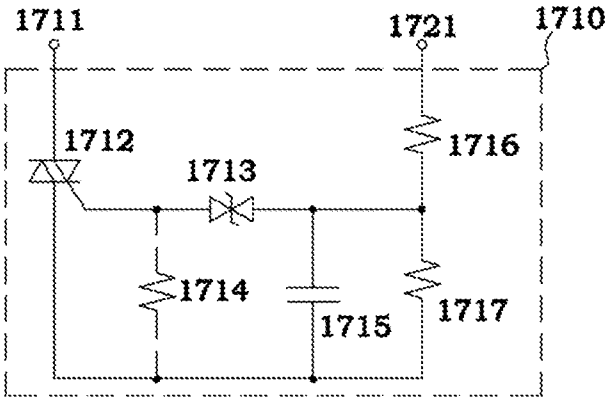

Fig. 33H

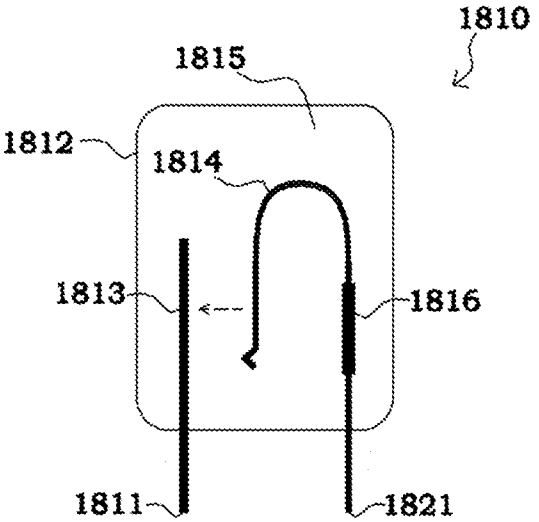

Fig. 33I

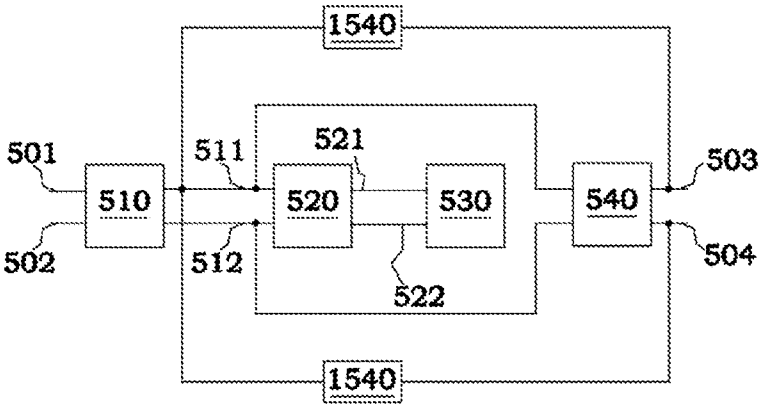

Fig. 34A

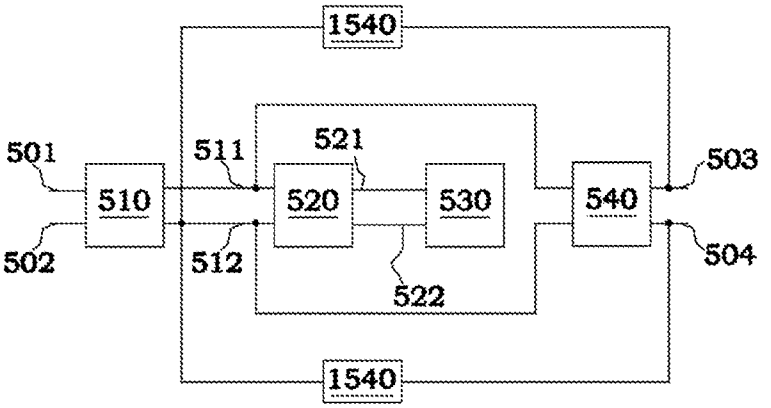

Fig. 34B

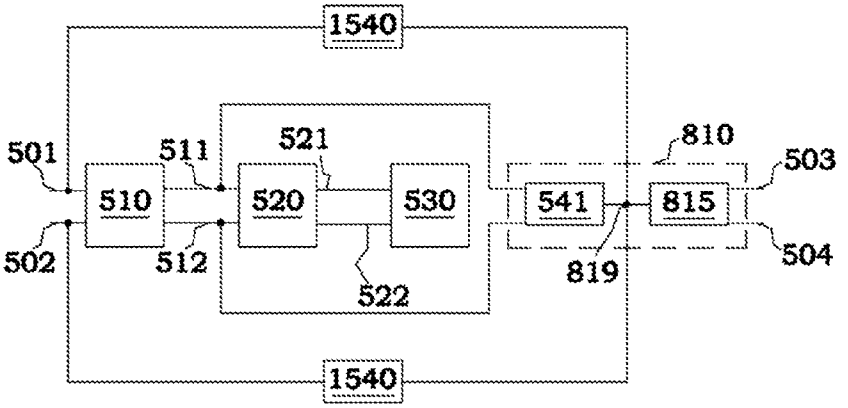

Fig. 34C

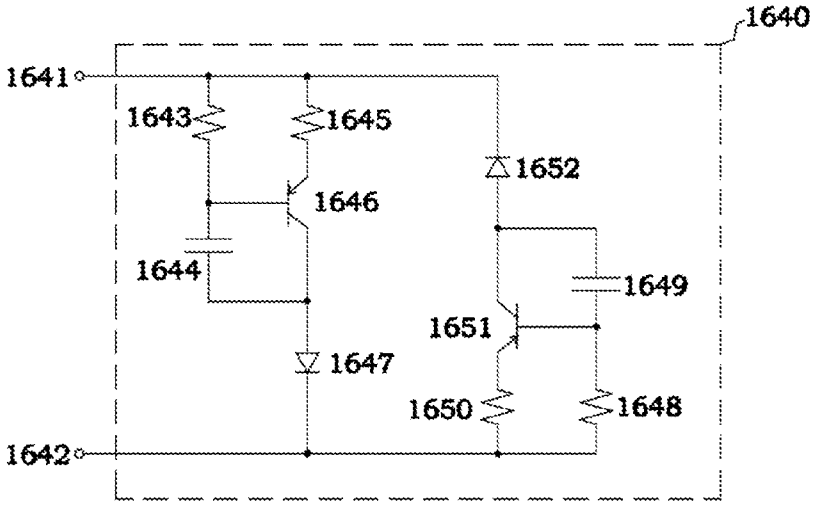

Fig. 34D

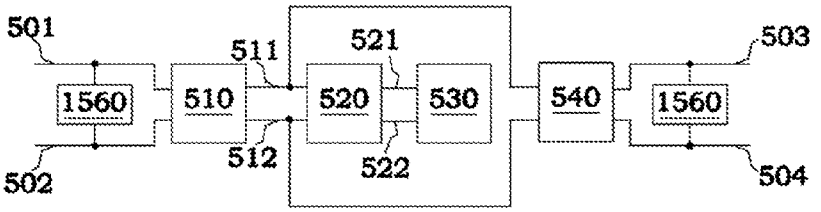

Fig. 35A

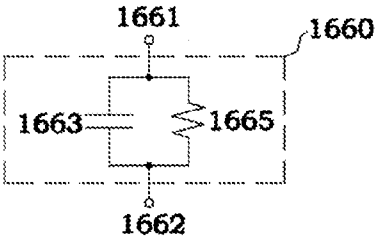

Fig. 35B

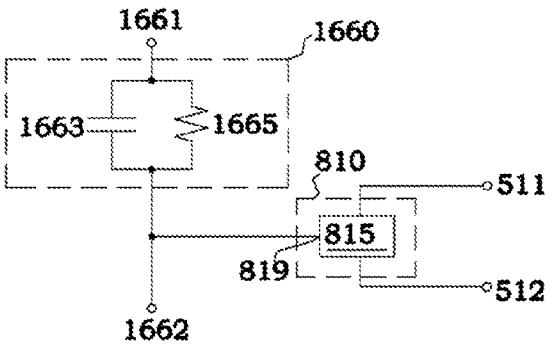

Fig. 35C

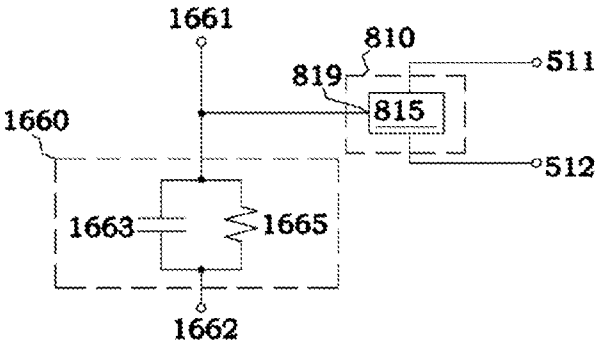

Fig. 35D

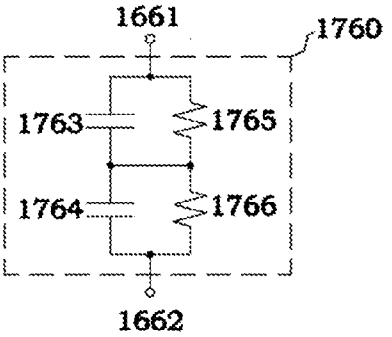

Fig. 35E

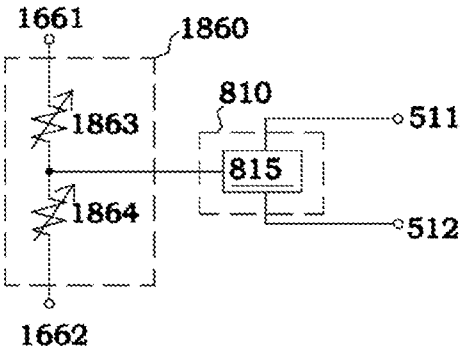

Fig. 35F

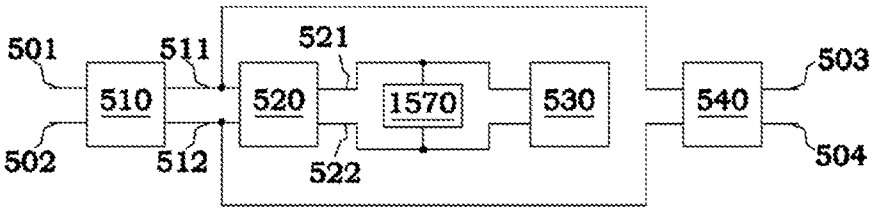

Fig. 36A

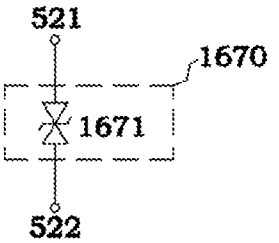

Fig. 36B

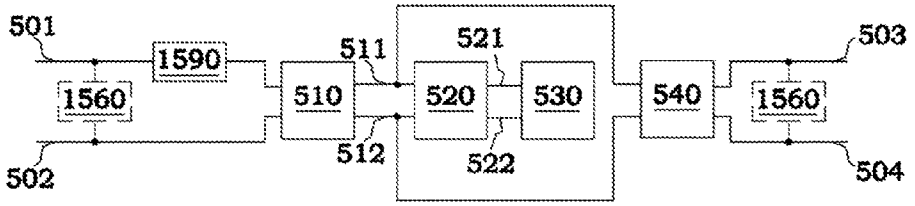

Fig. 37A

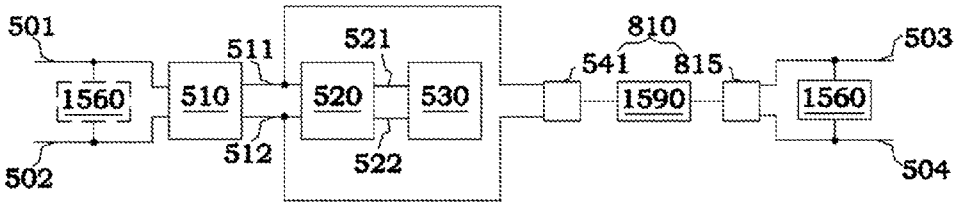

Fig. 37B

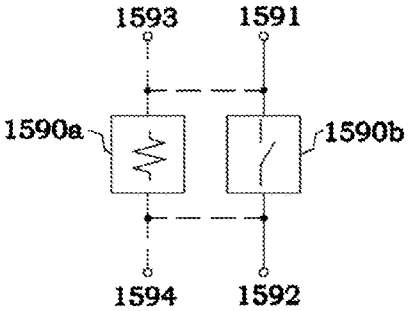

Fig. 37C

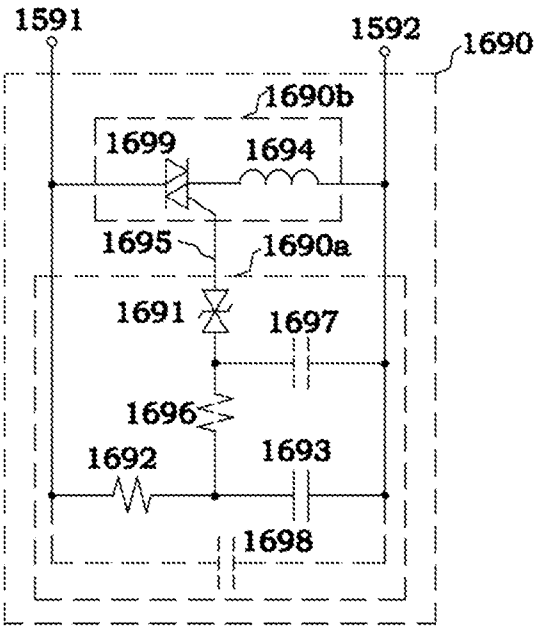

Fig. 37D

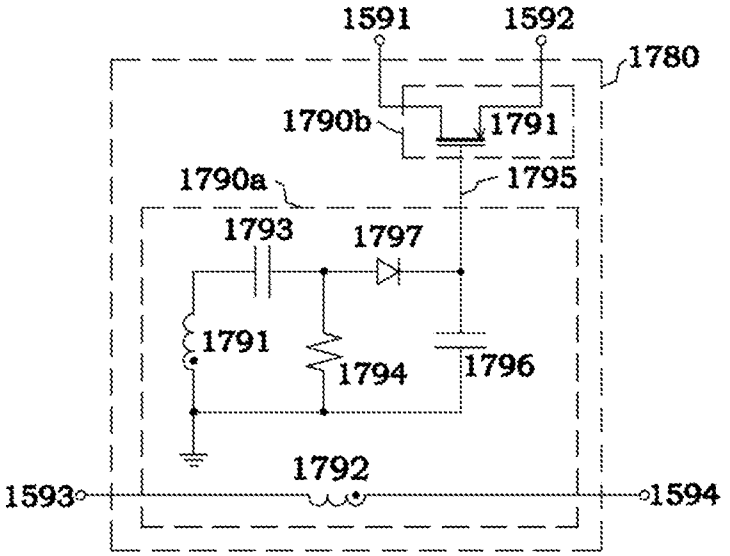

Fig. 37E

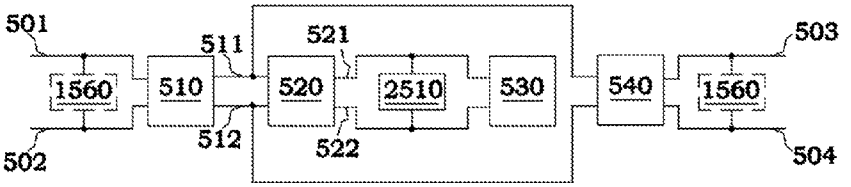

Fig. 38A

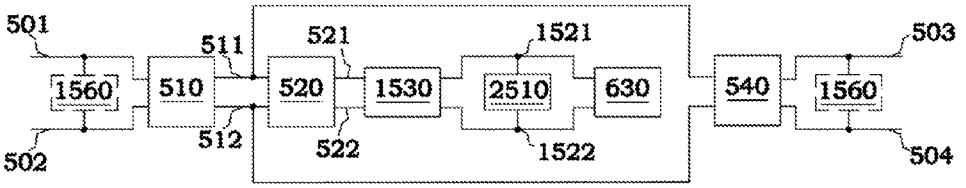

Fig. 38B

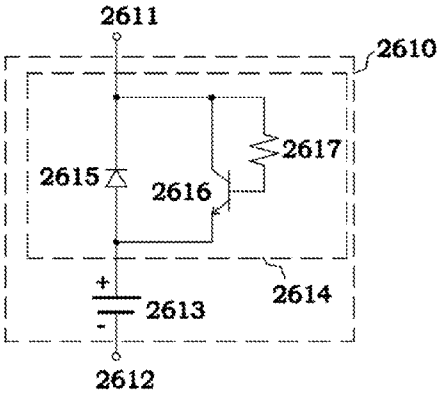

Fig. 38C

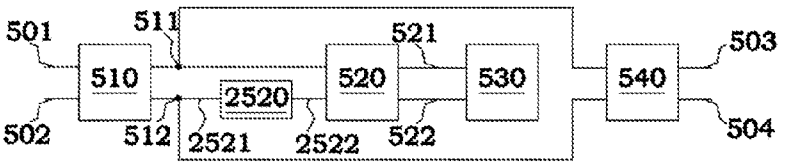

Fig. 39A

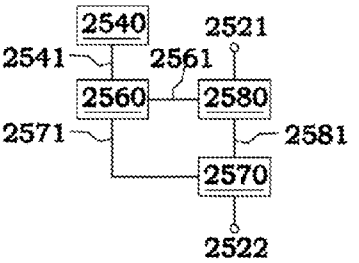

Fig. 39B

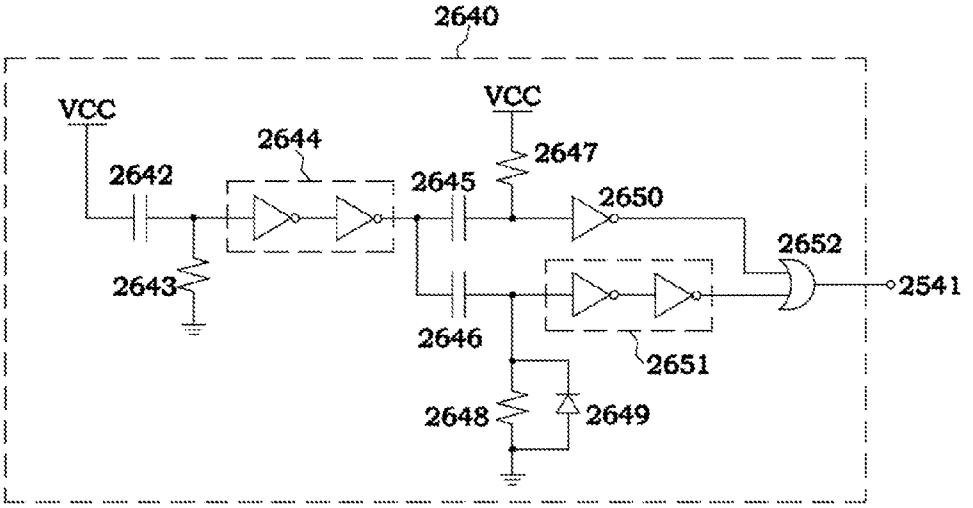

Fig. 39C

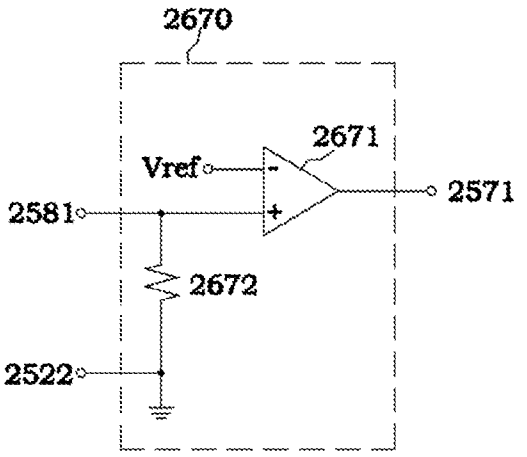

Fig. 39D

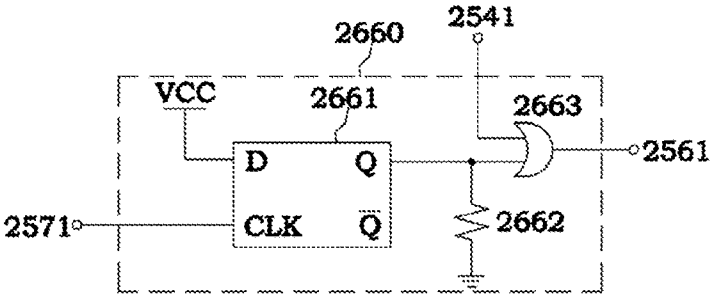

Fig. 39E

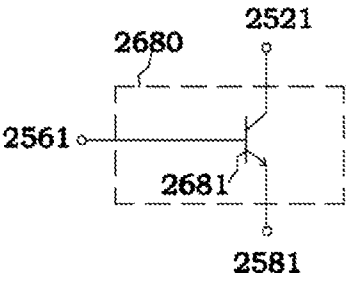

Fig. 39F

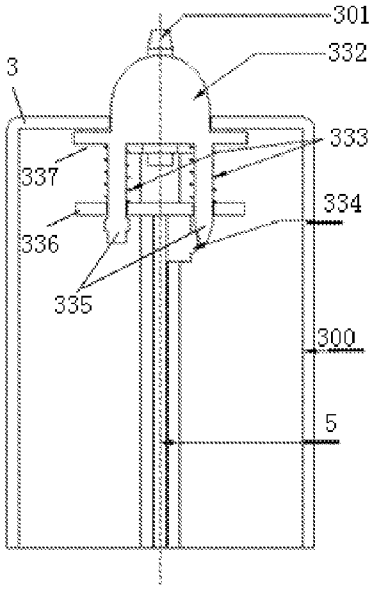

Fig. 40A

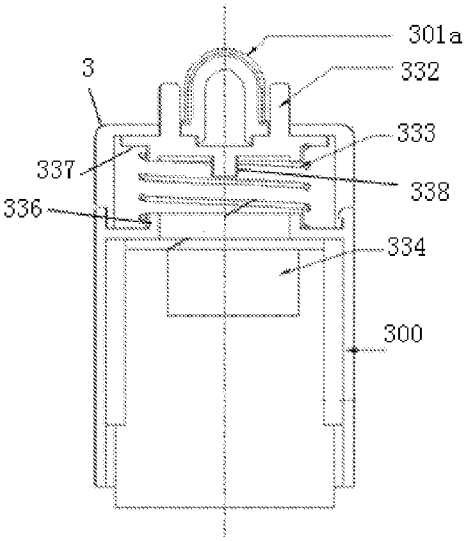

Fig. 40B

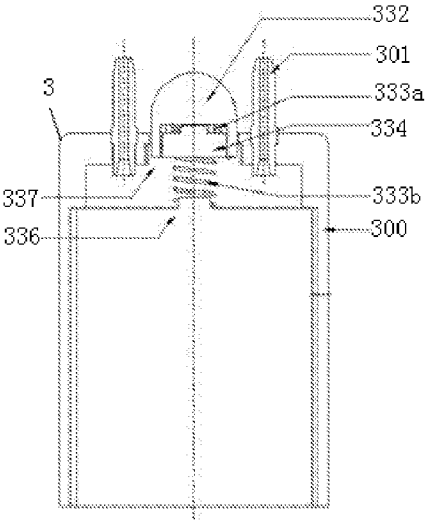

Fig. 40C

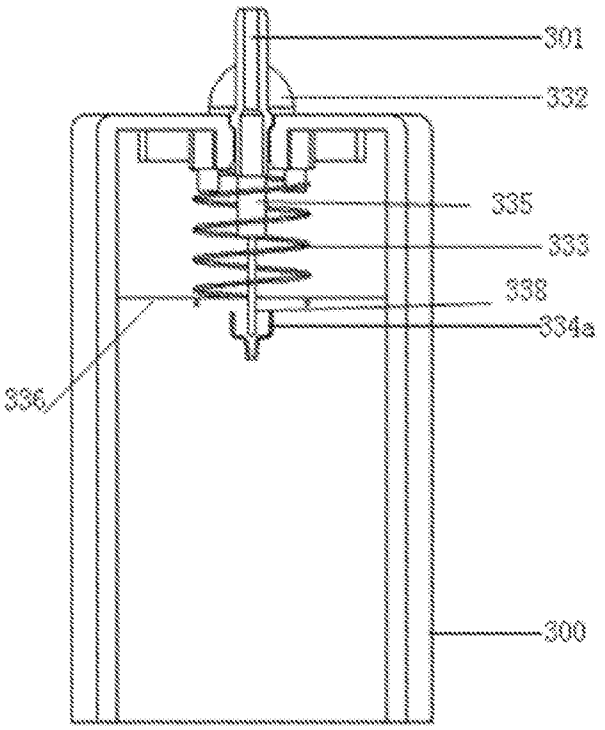

Fig. 40D

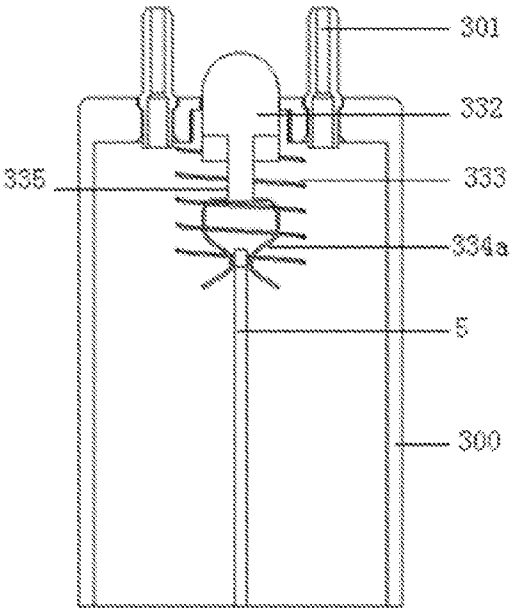

Fig. 40E

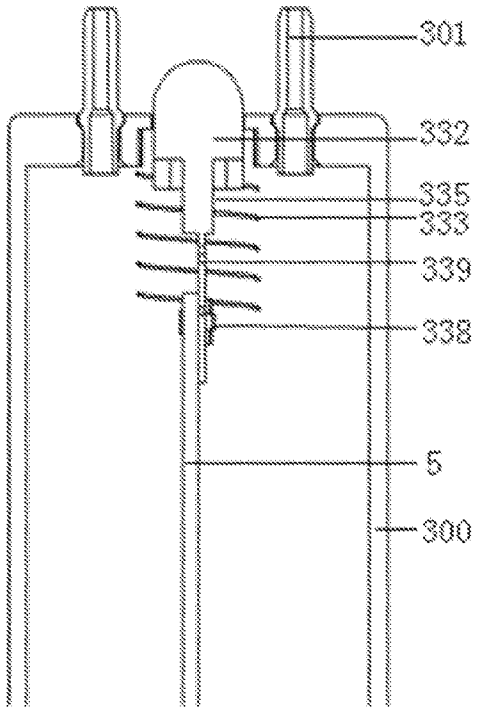

Fig. 40F

Fig. 41

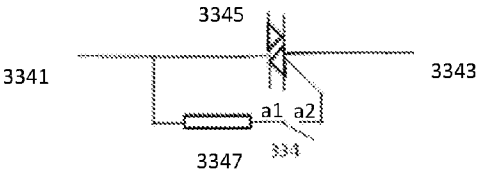

Fig. 42

LED TUBE LAMP

CROSS-REFERENCE TO RELATED APPLICATIONS

[0001] This application is a Continuation-In-Part application of U.S. patent application Ser. No. 14/865,387, filed Sep. 25, 2015 and the disclosure of which is incorporated in its entirety herein, which claims priority under 35 U.S.C. 119(e) to Chinese Patent Applications No. CN 201410507660.9 filed on 2014 Sep. 28; CN 201410508899.8 filed on 2014 Sep. 28; CN 201410623355.6 filed on 2014 Nov. 6; CN 201410734425.5 filed on 2014 Dec. 5; CN 201510075925.7 filed on 2015 Feb. 12; No. CN 201510104823.3 filed on 2015 Mar. 10; CN 201510134586.5 filed on 2015 Mar. 26; CN 201510133689.x filed on 2015 Mar. 25; CN 201510136796.8 filed on 2015 Mar. 27; CN 201510155807.7 filed on 2015 Apr. 3; CN 201510173861.4 filed on 2015 Apr. 14; CN 201510193980.6 filed on 2015 Apr. 22; CN 201510372375.5 filed on 2015 Jun. 26; CN 201510259151.3 filed on 2015 May 19; CN 201510268927.8 filed on 2015 May 22; CN 201510284720.x filed on 2015 May 29; CN 201510338027.6 filed on 2015 Jun. 17; CN 201510315636.x filed on 2015 Jun. 10; CN 201510373492.3 filed on 2015 Jun. 26; CN 201510364735.7 filed on 2015 Jun. 26; CN 201510378322.4 filed on 2015 Jun. 29; CN 201510391910.1 filed on 2015 Jul. 2; CN 201510406595.5 filed on 2015 Jul. 10; CN 201510482944.1 filed on 2015 Aug. 7; CN 201510486115.0 filed on 2015 Aug. 8; CN 201510428680.1 filed on 2015 Jul. 20; CN 201510483475.5 filed on 2015 Aug. 8; CN 201510555543.4 filed on 2015 Sep. 2; CN 201510557717.0 filed on 2015 Sep. 6; CN 201510595173.7 filed on 2015 Sep. 18, the disclosures of which are incorporated herein in their entirety by reference. This application also claims priority under U.S.C. 119(e) to Chinese Patent Applications no.: CN 201510530110.3 filed on 2015 Aug. 26; CN 201510499512.1 filed on 2015 Aug. 14; CN 201510448220.5 filed on 2015 Jul. 27; CN 201510645134.3 filed on 2015 Oct. 8; and CN 201510680883.x filed on 2015 Oct. 20, the disclosures of which are incorporated herein in their entirety by reference.

FIELD OF THE INVENTION

[0002] The present disclosure relates to illumination devices, and more particularly to an LED tube lamp and its components including the light sources, electronic components, and end caps.

BACKGROUND

[0003] LED lighting technology is rapidly developing to replace traditional incandescent and fluorescent lightings. LED tube lamps are mercury-free in comparison with fluorescent tube lamps that need to be filled with inert gas and mercury. Thus, it is not surprising that LED tube lamps are becoming a highly desired illumination option among different available lighting systems used in homes and workplaces, which used to be dominated by traditional lighting options such as compact fluorescent light bulbs (CFLs) and fluorescent tube lamps. Benefits of LED tube lamps include improved durability and longevity and far less energy consumption; therefore, when taking into account all factors, they would typically be considered as a cost effective lighting option.

[0004] Typical LED tube lamps have a lamp tube, a circuit board disposed inside the lamp tube with light sources being mounted on the circuit board, and end caps accompanying a power supply provided at two ends of the lamp tube with the electricity from the power supply transmitting to the light sources through the circuit board. However, existing LED tube lamps have certain drawbacks. For example, the typical circuit board is rigid and allows the entire lamp tube to maintain a straight tube configuration when the lamp tube is partially ruptured or broken, and this gives the user a false impression that the LED tube lamp remains usable and is likely to cause the user to be electrically shocked upon handling or installation of the LED tube lamp.

[0005] Further, circuit design of current LED tube lamps mostly doesn't provide suitable solutions for complying with relevant certification standards and for better compatibility with the driving structure using an electronic ballast originally for a fluorescent lamp. For example, since there are usually no electronic components in a fluorescent lamp, it's fairly easy for a fluorescent lamp to be certified under EMI (electromagnetic interference) standards and safety standards for lighting equipment as provided by Underwriters Laboratories (UL). However, there are a considerable number of electronic components in an LED tube lamp, and therefore consideration of the impacts caused by the layout (structure) of the electronic components is important, resulting in difficulties in complying with such standards.

[0006] Common main types of electronic ballast include instant-start ballast and program-start ballast. Electronic ballast typically includes a resonant circuit and is designed to match the loading characteristics of a fluorescent lamp in driving the fluorescent lamp. For example, for properly starting a fluorescent lamp, the electronic ballast provides driving methods respectively corresponding to the fluorescent lamp working as a capacitive device before emitting light, and working as a resistive device upon emitting light. But an LED is a nonlinear component with significantly different characteristics from a fluorescent lamp. Therefore, using an LED tube lamp with an electronic ballast impacts the resonant circuit design of the electronic ballast, which may cause a compatibility problem. Generally, a program-start ballast will detect the presence of a filament in a fluorescent lamp, but traditional LED driving circuits cannot support the detection and may cause a failure of the filament detection and thus failure of the starting of the LED tube lamp. Further, electronic ballast is in effect a current source, and when it acts as a power supply of a DC-to-DC converter circuit in an LED tube lamp, problems of overvoltage and overcurrent or undervoltage and undercurrent are likely to occur, resulting in damaging of electronic components in the LED tube lamp or unstable provision of lighting by the LED tube lamp.

[0007] Further, the driving of an LED uses a DC driving signal, but the driving signal for a fluorescent lamp is a low-frequency, low-voltage AC signal as provided by an AC powerline, a high-frequency, high-voltage AC signal provided by a ballast, or even a DC signal provided by a battery for emergency lighting applications. Since the voltages and frequency spectrums of these types of signals differ significantly, simply performing a rectification to produce the required DC driving signal in an LED tube lamp may not achieve the LED tube lamp's compatibility with traditional driving systems of a fluorescent lamp.

[0008] Moreover, when an LED tube lamp has an architecture with dual-end power supply and one end cap thereof is inserted into a lamp socket but the other is not, an electric

shock situation could take place for the user touching the metal or conductive part of the end cap which has been not inserted into the lamp socket.

[0009] Nowadays, LED tube lamps used to replace traditional fluorescent lighting devices can be primarily categorized into two types. One is for ballast-compatible LED tube lamps, e.g., T-LED lamp, which directly replaces fluorescent tube lamps without changing any circuit on the lighting device; and the other one is for ballast by-pass LED tube lamps, which omit traditional ballast on their circuit and directly connect the commercial electricity to the LED tube lamp. The latter LED tube lamp is suitable for the new surroundings in fixtures with new driving circuits and LED tube lamps.

SUMMARY OF THE INVENTION

[0010] It's specially noted that the present disclosure may actually include one or more inventions claimed currently or not yet claimed, and for avoiding confusion due to unnecessarily distinguishing between those possible inventions at the stage of preparing the specification, the possible plurality of inventions herein may be collectively referred to as "the (present) invention" herein.

[0011] Various embodiments are summarized in this section, and are described with respect to the "present invention," which terminology is used to describe certain presently disclosed embodiments, whether claimed or not, and is not necessarily an exhaustive description of all possible embodiments, but rather is merely a summary of certain embodiments. Certain of the embodiments described below as various aspects of the "present invention" can be combined in different manners to form an LED tube lamp or a portion thereof.

[0012] The present disclosure provides a novel LED tube lamp, and aspects thereof.

[0013] According to certain embodiments, a light-emitting diode (LED) tube lamp includes: a lamp tube; two end caps, each having at least one pin and each coupled to a respective end of the lamp tube, the pins of the two end caps for receiving an external driving signal; a first rectifying circuit, coupled to a pin of one of the two end caps, for rectifying the external driving signal to produce a rectified signal; a second rectifying circuit, coupled to a pin of the other of the two end caps, for simultaneously rectifying the external driving signal with the first rectifier; a filtering circuit, coupled to the first and the second rectifying circuits, for filtering the rectified signal to produce a filtered signal; an LED lighting module, coupled to the filtering circuit, and configured to receive the filtered signal to produce a driving signal, wherein the LED lighting module includes an LED module configured to receive the driving signal and emit light; and an installation detection module, configured to determine whether to cut off the external driving signal passing through the LED tube lamp, wherein the installation detection module includes a first installation detection terminal and a second installation detection terminal, the first installation detection terminal is coupled to the first and/or the second rectifying circuits, the second installation detection terminal is coupled to the filtering circuit, wherein, the installation detection module is configured such that when a current passing through the first and the second installation detection terminals is bigger than or equal to a specific current value, the installation detection module conducts to make the LED tube lamp operate in a conductive state; and when the current passing through the first and the second installation detection terminals is smaller than the specific current value, the installation detection module cuts off to make the LED tube lamp enter in a non-conducting state.

[0014] In some embodiments, the installation detection module includes a switch circuit, a detection pulse generating module, a detection result latching circuit, and a detection determining circuit, wherein the detection determining circuit is coupled to the detection result latching circuit, the first and the second installation detection terminals, and is configured to detect a signal between the first and the second installation detection terminals to transmit a detection result signal to the detection result latching circuit, wherein the detection pulse generating module is coupled to the detection result latching circuit, and is configured to inform the detection result latching circuit of a time point for latching the detection result, wherein the detection result latching circuit is coupled to the switch circuit and latches a detection result according to the detection result signal, and further transmits the detection result to the switch circuit, wherein the switch circuit controls the state between conducting or cutt off between the first and the second installation detection terminals according to the detection result.

[0015] In some embodiments, the detection pulse generating module includes a first capacitor, a second capacitor, a first resistor, a second resistor, a first buffer, an inverter, a diode, and an OR gate, wherein one end of the first resistor is coupled to an input terminal of the inverter, one end of the second resistor is coupled to an input terminal of the first buffer, a cathode of the diode is coupled to the input terminal of the first buffer and the diode is coupled with the second resistor in parallel, one ends of the first and the second capacitors are jointly coupled, the other ends of the first and the second capacitors are correspondingly coupled to the input terminal of the inverter and the input terminal of the first buffer, an output terminal of the inverter and an output terminal of the first buffer are coupled to two input terminals of the OR gate, respectively, an output terminal of the OR gate is coupled to the detection result latching circuit.

[0016] In some embodiments, when the one end cap of the LED tube lamp inserts a lamp socket and the other end cap thereof is electrically coupled to a human body or both the end caps insert the lamp socket, and the another end of the first resistor is coupled to a driving voltage, the another end of the second resistor is coupled to a reference voltage, and a joint connection node of the first and the second capacitors is coupled to the driving voltage, the driving voltage at the joint connection node of the first and the second capacitors is processed to produce an input pulse signal on the joint connection node, wherein during a high logic level of the input pulse signal inputting the joint connection node, the OR gate outputs a first pulse signal at the output terminal thereof for the detection result latching circuit latching a detection result based on the detection result signal and the first pulse signal, further, when the input terminal of the first buffer receives a low logic level of the input pulse signal from the output terminal of the OR gate, the first pulse signal on the output terminal thereof transferring into a low logic level signal.

[0017] In some embodiments, a width of the input pulse signal received by the joint connection node is equal to one time period, and the input pulse signal keeps a low logic level after the time period is over, wherein from the time period is over and the joint connection node receiving the high logic level of the input pulse signal and then transferring into the

low logic level signal, the output terminal of the inverter has a high logic level signal to make the OR gate output a high logic level of a second pulse signal for the detection result latching circuit latching the detection result based on the detection result signal and the second pulse signal.

[0018] In some embodiments, the pulse width of the first or the second pulse signal is from 10 us to 1 ms.

[0019] In some embodiments, from the output terminal of the inverter transferring into the high logic level and when the voltage on the input terminal of the inverter rises and is equal to the driving voltage or a high logic level, the output terminal of the inverter transfers from the high logic level into a low logic level to make the OR gate stop outputting the second pulse signal or become to output a low logic level.

[0020] In some embodiments, the pulse width of the second pulse signal is determined based on the capacitance of the first capacitor and the resistance of the first resistor.

[0021] In some embodiments, a time difference between productions of the first and second pulse signals or an interval with a defined time between both of them includes as following: the interval=(X+Y)(T/2), wherein T represents a cycle of the external driving signal, X is a natural number, and $0<Y<1$. In some embodiments, a range for Y is from about 0.05-0.95. And further, in some embodiments, a range for Y is from about 0.15-0.85.

[0022] In some embodiments, the pulse width of the first pulse signal output by the OR gate is decided by the capacitance of the second capacitor and the resistance of the second resistor.

[0023] In some embodiments, the time difference between the productions of the first and the second pulse signals is not equal to multiple times of half one cycle of the external driving signal, and not corresponding to a multiple of 180 degrees phase difference of the external driving signal.

[0024] In some embodiments, the detection pulse generating module further includes a third capacitor, a third resistor, and a second buffer, wherein a connection node of the third capacitor and the third resistor is coupled to an input terminal of the second buffer, an output terminal of the second buffer is coupled to the joint connection node of the first and the second capacitors, the third capacitor and the third resistor are coupled in serial between a driving voltage and a reference voltage, wherein the third capacitor, the third resistor, and the second buffer are configured to process the driving voltage to generate an input pulse signal at the joint connection node, wherein a width of the input pulse signal is equal to one time period and a low logic level on the joint connection node is output after the time period being over.

[0025] In some embodiments, the time period is determined by the capacitance of the third capacitor and the resistance of the third resistor.

[0026] In some embodiments, the detection determining circuit is coupled to the first installation detection terminal through a switch circuit coupling terminal and the switch circuit and is coupled to the detection result latching circuit via a detection result terminal, wherein the detection determining circuit includes a comparator, and a resistor, wherein a negative input terminal of the comparator receives a reference voltage, a positive input terminal thereof is coupled to the switch circuit coupling terminal and is coupled to the second installation detection terminal through the resistor, an output terminal of the comparator includes the detection result terminal. In some embodiments, when a current of the signal between the first and the second installation detection terminals passes through the resistor and makes a voltage on the positive input terminal higher than the reference voltage, the comparator produces a high logic level of the detection result signal and outputs to the detection result terminal, wherein the comparator generates a low logic level of the detection result signal and outputs to the detection result terminal when a current between the first and the second installation detection terminals passing through the resistor is insufficient to make the voltage on the positive input terminal higher than the reference voltage.

[0027] In some embodiments, the signal between the first and the second installation detection terminals inputs form the first installation detection terminal and passes through the switch circuit, the switch circuit coupling terminal, and the detection determining circuit.

[0028] In some embodiments, the detection result latching circuit is coupled to the detection determining circuit via a detection result terminal, to the switch circuit via a detection result latching terminal, and to the detection pulse generating module via a pulse signal output terminal, wherein the detection result latching circuit includes a D flip-flop, a resistor, and an OR gate, wherein the D flip-flop has a CLK input terminal coupled to the detection result terminal, and a D input terminal coupled to a driving voltage, one end of the resistor is coupled to a Q output terminal of the D flip-flop and the other end thereof is coupled to a reference voltage, the OR gate has two input terminals respectively coupled to the pulse signal output terminal and the Q output terminal of the D flip-flop, and has an output terminal coupled to the detection result latching terminal. In some embodiments, when the D input terminal of the D flip-flop is coupled to a driving voltage and the another end of the resistor is coupled to a reference voltage, and further when the detection result terminal outputs a low logic level of the detection result signal to the CLK input terminal, the D flip-flop outputs a low logic level signal at the Q output terminal thereof, but the D flip-flop outputs a high logic level signal at the Q output terminal thereof when the detection result terminal outputs a high logic level of the detection result signal to the CLK input terminal, wherein when the OR gate receives a pulse signal from the pulse signal output terminal or receives a high logic level signal from the Q output terminal of the D flip-flop, the OR gate outputs a high logic level of the detection result latching signal at the detection result latching terminal.

[0029] In some embodiments, the switch circuit is coupled to the first installation detection terminal, to the detection result latching circuit via a detection result latching terminal, and to the detection determining circuit via a switch circuit coupling terminal, the switch circuit includes a transistor coupled to the first installation detection terminal, to the detection result latching terminal, and to the switch circuit coupling terminal.

[0030] In some embodiments, when the detection pulse generating module produces a pulse signal, the transistor conducts to allow the detection determining circuit to perform detection for determining the detection result latching signal output by the detection result latching circuit at the detection result latching terminal to be high logic level or low logic level, and when the detection result latching signal is high logic level, the transistor conducts to make the first and the second installation detection terminals conducting, and when the detection result latching signal is low logic level, the transistor cuts off to make the first and the second installation detection terminals cutting off.

[0031] In some embodiments, the transistor includes a bipolar junction transistor being a power transistor, the bipolar junction transistor has a collector coupled to the first installation detection terminal, a base coupled to the detection result latching terminal, and an emitter coupled to the switch circuit coupling terminal.

[0032] In some embodiments, when the one end cap of the LED tube lamp is inserted into the lamp socket and the another floats or electrically couples to a human body, the detection determining circuit outputs a low logic level of the detection result signal to the detection result latching circuit, and then the detection pulse generating module outputs a low logic level signal to the detection result latching circuit to make the detection result latching circuit output a low logic level of a detection result latching signal to make the switch circuit cutting off, wherein the switch circuit cutting off makes the first and the second installation detection terminals blocking so as to make the LED tube lamp be in a non-conducting state.

[0033] In some embodiments, when the two end caps of the LED tube lamp are correctly inserted into the lamp socket, the detection determining circuit outputs a high logic level of the detection result signal to the detection result latching circuit to make the detection result latching circuit output a high logic level of the detection result latching signal to make the switch circuit conducting, wherein the switch circuit conducting makes the first and the second installation detection terminals conducting so as to make the LED tube lamp operate in a conducting state.

[0034] According to some embodiments of the LED tube lamp described herein, the end cap assembly will not conduct before being correctly inserted into the lamp socket so as to provide a safety protection for the user from electric shock.

[0035] According to some embodiments, a light-emitting diode (LED) tube lamp includes a lamp tube; two end caps, each having at least one pin, and each coupled to a respective end of the lamp tube, the pins of the two end caps for receiving a driving signal; an LED module coupled to the two end caps, and configured to emit light in response to the driving signal; and an installation detection circuit configured to determine whether to cut off a current generated from the driving signal from reaching the LED module, the installation detection circuit having an input terminal and output terminal. The installation detection circuit may be configured such that when a current passing through the input terminal and the output terminal is bigger than or equal to a specific current value, the installation detection circuit conducts to make the LED module operate in a conductive state, and when the current passing through the input terminal and output terminal is smaller than the specific current value, the installation detection circuit cuts off to make the LED module enter in a non-conducting state.

[0036] In some embodiments, the installation detection circuit further comprises: a first circuit configured to output two pulse signals, the first pulse signal output at a first time and the second pulse signal output at a second time after the first time; and a switch configured to receive the driving signal and to receive the two pulse signals. In some embodiments, the two pulse signals control turning on and off of the switch to control whether the LED module operates in a conductive state or in a non-conducting state.

[0037] According to some embodiments, the driving signal is an alternating current (AC) signal having a period; and the amount of time between the first time and the second time is not a multiple of half of the period of the driving signal. For example, the first time may be at the beginning of the first pulse signal; and the second time may be at the beginning of the second pulse signal. In some embodiments, a time difference between productions of the first and second pulse signals or an interval with a defined time between both of them is the following: the interval=(X+Y)(T/2), wherein T represents the period of the driving signal, X is a natural number, and $0.05<Y<0.95$.

[0038] According to some embodiments, the LED tube lamp further includes a first rectifying circuit connected between the input terminal of the installation detection circuit and a first pin of one end cap of the two end caps; and a filtering circuit connected between the output terminal of the installation detection circuit and the lighting module.

[0039] The LED tube lamp may further include a second rectifying circuit, coupled to a first pin of the other of the two end caps and coupled to the installation detection circuit.

[0040] In some embodiments, the LED tube lamp includes a driving circuit coupled between the LED module and the installation detection circuit.

[0041] According to certain embodiments, an LED tube lamp includes an installation detection circuit. The installation detection circuit includes a first circuit configured to output a plurality of pulse signals including a first pulse signal and a second pulse signal, the first pulse signal output at a first time and the second pulse signal output at a second time after the first time; and a switch configured to receive an LED driving signal and to receive the plurality of pulse signals, wherein the plurality of pulse signals control turning on and off of the switch. The installation detection circuit is configured to: during a detection stage, detect during each of the plurality of pulse signals whether the LED tube lamp is properly connected to a lamp socket; when it is not detected during any of the plurality of pulse signals that the LED tube lamp is properly connected to the lamp socket, control the switch to remain in an off state after the detection stage; and when it is detected during at least one of the plurality of pulse signals that the LED tube lamp is properly connected to the lamp socket, control the switch to remain in an on state after the detection stage.

[0042] In some embodiments, the LED tube lamp further includes a latch circuit connected to the switch and configured to control turning on and off of the switch.

[0043] In some embodiments, the LED driving signal is an AC signal having a period; and the amount of time between the first time and the second time is not a multiple of half of the period of the LED driving signal. For example, the first time may be at the beginning of the first pulse signal; and the second time may be at the beginning of the second pulse signal.

BRIEF DESCRIPTION OF THE DRAWINGS

[0044] FIG. **1** is a perspective view schematically illustrating an LED tube lamp according to one embodiment of the present invention;

[0045] FIG. **1**A is a perspective view schematically illustrating the different sized end caps of an LED tube lamp according to another embodiment of the present invention to illustrate;

[0046] FIG. **2** is an exemplary exploded view schematically illustrating the LED tube lamp shown in FIG. **1**;

[0047] FIG. **3** is a perspective view schematically illustrating front and top of an end cap of the LED tube lamp according to one embodiment of the present invention;

[0048] FIG. **4** is an exemplary perspective view schematically illustrating bottom of the end cap as shown in FIG. **3**;

[0049] FIG. **5** is a perspective view schematically illustrating still another end cap of an LED tube lamp according to still another embodiment of the present invention;

[0050] FIG. **6** is a plane cross-sectional view schematically illustrating the LED light strip is a bendable circuit sheet with ends thereof passing across the transition region of the lamp tube of the LED tube lamp to be soldering bonded to the output terminals of the power supply according to one embodiment of the present invention;

[0051] FIG. **7** is a plane cross-sectional view schematically illustrating a bi-layered structure of the bendable circuit sheet of the LED light strip of the LED tube lamp according to an embodiment of the present invention;

[0052] FIG. **8** is a perspective view schematically illustrating the soldering pad of the bendable circuit sheet of the LED light strip for soldering connection with the printed circuit board of the power supply of the LED tube lamp according to one embodiment of the present invention;

[0053] FIG. **9** is a plane view schematically illustrating the arrangement of the soldering pads of the bendable circuit sheet of the LED light strip of the LED tube lamp according to one embodiment of the present invention;

[0054] FIG. **10** is a plane view schematically illustrating a row of three soldering pads of the bendable circuit sheet of the LED light strip of the LED tube lamp according to another embodiment of the present invention;

[0055] FIG. **11** is a plane view schematically illustrating two rows of soldering pads of the bendable circuit sheet of the LED light strip of the LED tube lamp according to still another embodiment of the present invention;

[0056] FIG. **12** is a plane view schematically illustrating a row of four soldering pads of the bendable circuit sheet of the LED light strip of the LED tube lamp according to yet another embodiment of the present invention;

[0057] FIG. **13** is a plane view schematically illustrating two rows of two soldering pads of the bendable circuit sheet of the LED light strip of the LED tube lamp according to yet still another embodiment of the present invention;

[0058] FIG. **14** is a plane view schematically illustrating through holes are formed on the soldering pads of the bendable circuit sheet of the LED light strip of the LED tube lamp according to one embodiment of the present invention;

[0059] FIG. **15** is a plane cross-sectional view schematically illustrating soldering bonding process utilizing the soldering pads of the bendable circuit sheet of the LED light strip of FIG. **14** taken from side view and the printed circuit board of the power supply according to one embodiment of the present invention;

[0060] FIG. **16** is a plane cross-sectional view schematically illustrating soldering bonding process utilizing the soldering pads of the bendable circuit sheet of the LED light strip of FIG. **14** taken from side view and the printed circuit board of the power supply according to another embodiment of the present invention, wherein the through hole of the soldering pads is near the edge of the bendable circuit sheet;

[0061] FIG. **17** is a plane view schematically illustrating notches formed on the soldering pads of the bendable circuit sheet of the LED light strip of the LED tube lamp according to one embodiment of the present invention;

[0062] FIG. **18** is an exemplary plane cross-sectional view of FIG. **17** taken along a line A-A';

[0063] FIG. **19** is a perspective view schematically illustrating a circuit board assembly composed of the bendable circuit sheet of the LED light strip and the printed circuit board of the power supply according to another embodiment of the present invention;

[0064] FIG. **20** is a perspective view schematically illustrating another arrangement of the circuit board assembly of FIG. **19**;

[0065] FIG. **21** is a perspective view schematically illustrating a power supply of the LED tube lamp according to one embodiment of the present invention;

[0066] FIG. **22** is a perspective view schematically illustrating the printed circuit board of the power supply, which is perpendicularly adhered to a hard circuit board made of aluminum via soldering according to another embodiment of the present invention;

[0067] FIG. **23** is a perspective view schematically illustrating the bendable circuit sheet of the LED light strip is formed with two conductive wiring layers according to another embodiment of the present invention;

[0068] FIG. **24**A is a block diagram of an exemplary power supply module in an LED tube lamp according to some embodiments of the present invention;

[0069] FIG. **24**B is a circuit block diagram of an LED lamp according to some embodiments of the present invention;

[0070] FIG. **25**A is a schematic diagram of a rectifying circuit according to some embodiments of the present invention;

[0071] FIG. **25**B is a schematic diagram of a rectifying circuit according to some embodiments of the present invention;

[0072] FIG. **25**C is a schematic diagram of a rectifying circuit according to some embodiments of the present invention;

[0073] FIG. **25**D is a schematic diagram of a rectifying circuit according to some embodiments of the present invention;

[0074] FIG. **26**A is a schematic diagram of a terminal adapter circuit according to some embodiments of the present invention;

[0075] FIG. **26**B is a schematic diagram of a terminal adapter circuit according to some embodiments of the present invention;

[0076] FIG. **26**C is a schematic diagram of a terminal adapter circuit according to some embodiments of the present invention;

[0077] FIG. **26**D is a schematic diagram of a terminal adapter circuit according to some embodiments of the present invention;

[0078] FIG. **27**A is a block diagram of a filtering circuit according to some embodiments of the present invention;

[0079] FIG. **27**B is a schematic diagram of a filtering unit according to some embodiments of the present invention;

[0080] FIG. **27**C is a schematic diagram of a filtering unit according to some embodiments of the present invention;

[0081] FIG. **27**D is a schematic diagram of a filtering unit according to some embodiments of the present invention;

[0082] FIG. **27**E is a schematic diagram of a filtering unit according to some embodiments of the present invention;

[0083] FIG. **28**A is a schematic diagram of an LED module according to some embodiments of the present invention;

[0084] FIG. **28**B is a schematic diagram of an LED module according to some embodiments of the present invention;

[0085] FIG. **28**C is a plan view of a circuit layout of the LED module according to some embodiments of the present invention;

[0086] FIG. **28**D is a plan view of a circuit layout of the LED module according to some embodiments of the present invention;

[0087] FIG. **28**E is a plan view of a circuit layout of the LED module according to some embodiments of the present invention;

[0088] FIG. **29**A is a block diagram of an exemplary power supply module in an LED lamp according to some embodiments of the present invention;

[0089] FIG. **29**B is a block diagram of a driving circuit according to some embodiments of the present invention;

[0090] FIG. **29**C is a schematic diagram of a driving circuit according to some embodiments of the present invention;

[0091] FIG. **29**D is a schematic diagram of a driving circuit according to some embodiments of the present invention;

[0092] FIG. **29**E is a schematic diagram of a driving circuit according to some embodiments of the present invention;

[0093] FIG. **29**F is a schematic diagram of a driving circuit according to some embodiments of the present invention;

[0094] FIG. **29**G is a block diagram of a driving circuit according to some embodiments of the present invention;

[0095] FIG. **29**H is a graph illustrating the relationship between the voltage Vin and the objective current Iout according to certain embodiments of the present invention;

[0096] FIG. **30**A is a block diagram of an exemplary power supply module in an LED lamp according to some embodiments of the present invention;

[0097] FIG. **30**B is a schematic diagram of an anti-flickering circuit according to some embodiments of the present invention;

[0098] FIG. **31**A is a block diagram of an exemplary power supply module in an LED lamp according to some embodiments of the present invention;

[0099] FIG. **31**B is a schematic diagram of a protection circuit according to some embodiments of the present invention;

[0100] FIG. **32**A is a block diagram of an exemplary power supply module in an LED lamp according to some embodiments of the present invention;

[0101] FIG. **32**B is a schematic diagram of a mode switching circuit in an LED lamp according to some embodiments of the present invention;

[0102] FIG. **32**C is a schematic diagram of a mode switching circuit in an LED lamp according to some embodiments of the present invention;

[0103] FIG. **32**D is a schematic diagram of a mode switching circuit in an LED lamp according to some embodiments of the present invention;

[0104] FIG. **32**E is a schematic diagram of a mode switching circuit in an LED lamp according to some embodiments of the present invention;

[0105] FIG. **32**F is a schematic diagram of a mode switching circuit in an LED lamp according to some embodiments of the present invention;

[0106] FIG. **32**G is a schematic diagram of a mode switching circuit in an LED lamp according to some embodiments of the present invention;

[0107] FIG. **32**H is a schematic diagram of a mode switching circuit in an LED lamp according to some embodiments of the present invention;

[0108] FIG. **32**I is a schematic diagram of a mode switching circuit in an LED lamp according to some embodiment of the present invention;

[0109] FIG. **33**A is a block diagram of an exemplary power supply module in an LED lamp according to some embodiments of the present invention;

[0110] FIG. **33**B is a block diagram of an exemplary power supply module in an LED lamp according to some embodiments of the present invention;

[0111] FIG. **33**C illustrates an arrangement with a ballast-compatible circuit in an LED lamp according to some embodiments of the present invention;

[0112] FIG. **33**D is a block diagram of an exemplary power supply module in an LED lamp according to some embodiments of the present invention;

[0113] FIG. **33**E is a block diagram of an exemplary power supply module in an LED lamp according to some embodiments of the present invention;

[0114] FIG. **33**F is a schematic diagram of a ballast-compatible circuit according to some embodiments of the present invention;

[0115] FIG. **33**G is a block diagram of an exemplary power supply module in an LED lamp according to some embodiments of the present invention;

[0116] FIG. **33**H is a schematic diagram of a ballast-compatible circuit according to some embodiments of the present invention;

[0117] FIG. **33**I illustrates a ballast-compatible circuit according to some embodiments of the present invention;

[0118] FIG. **34**A is a block diagram of an exemplary power supply module in an LED tube lamp according to some embodiments of the present invention;

[0119] FIG. **34**B is a block diagram of an exemplary power supply module in an LED tube lamp according to some embodiments of the present invention;

[0120] FIG. **34**C is a block diagram of an exemplary power supply module in an LED tube lamp according to some embodiments of the present invention;

[0121] FIG. **34**D is a schematic diagram of a ballast-compatible circuit according to some embodiments of the present invention;

[0122] FIG. **35**A is a block diagram of an exemplary power supply module in an LED tube lamp according to some embodiments of the present invention;

[0123] FIG. **35**B is a schematic diagram of a filament-simulating circuit according to some embodiments of the present invention;

[0124] FIG. **35**C is a schematic block diagram including a filament-simulating circuit according to some embodiments of the present invention;

[0125] FIG. **35**D is a schematic block diagram including a filament-simulating circuit according to some embodiments of the present invention;

[0126] FIG. **35**E is a schematic diagram of a filament-simulating circuit according to some embodiments of the present invention;

[0127] FIG. **35**F is a schematic block diagram including a filament-simulating circuit according to some embodiments of the present invention;

[0128] FIG. **36**A is a block diagram of an exemplary power supply module in an LED tube lamp according to some embodiments of the present invention;

[0129] FIG. **36**B is a schematic diagram of an OVP circuit according to an embodiment of the present invention;

[0130] FIG. **37**A is a block diagram of an exemplary power supply module in an LED tube lamp according to some embodiments of the present invention;

[0131] FIG. **37**B is a block diagram of an exemplary power supply module in an LED tube lamp according to some embodiments of the present invention;

[0132] FIG. **37**C is a block diagram of a ballast detection circuit according to some embodiments of the present invention;

[0133] FIG. **37**D is a schematic diagram of a ballast detection circuit according to some embodiments of the present invention;

[0134] FIG. **37**E is a schematic diagram of a ballast detection circuit according to some embodiments of the present invention;

[0135] FIG. **38**A is a block diagram of an exemplary power supply module in an LED tube lamp according to some embodiments of the present invention;

[0136] FIG. **38**B is a block diagram of an exemplary power supply module in an LED tube lamp according to some embodiments of the present invention;

[0137] FIG. **38**C is a schematic diagram of an auxiliary power module according to an embodiment of the present invention;

[0138] FIG. **39**A is a block diagram of an exemplary power supply module in an LED tube lamp according to some embodiments of the present invention;

[0139] FIG. **39**B is a block diagram of an installation detection module according to some embodiments of the present invention;

[0140] FIG. **39**C is a schematic detection pulse generating module according to some embodiments of the present invention;

[0141] FIG. **39**D is a schematic detection determining circuit according to some embodiments of the present invention;

[0142] FIG. **39**E is a schematic detection result latching circuit according to some embodiments of the present invention;

[0143] FIG. **39**F is a schematic switch circuit according to some embodiments of the present invention;

[0144] FIGS. **40**A-F are several structures of end caps according to some embodiments of the present invention;

[0145] FIG. **41** is a schematic structure of an LED tube lamp according to some embodiments of the present invention; and

[0146] FIG. **42** is an alternative micro switch embodiment of FIG. **41**.

DETAILED DESCRIPTION

[0147] The present disclosure provides a novel LED tube lamp. The present disclosure will now be described in the following embodiments with reference to the drawings. The following descriptions of various embodiments of this invention are presented herein for purpose of illustration and giving examples only. It is not intended to be exhaustive or to be limited to the precise form disclosed. These example embodiments are just that—examples—and many implementations and variations are possible that do not require the details provided herein. It should also be emphasized that the disclosure provides details of alternative examples, but such listing of alternatives is not exhaustive. Furthermore, any consistency of detail between various examples should not be interpreted as requiring such detail—it is impracticable to list every possible variation for every feature described herein. The language of the claims should be referenced in determining the requirements of the invention.

[0148] In the drawings, the size and relative sizes of components may be exaggerated for clarity. Like numbers refer to like elements throughout.

[0149] The terminology used herein is for the purpose of describing particular embodiments only and is not intended to be limiting of the invention. As used herein, the singular forms "a", "an" and "the" are intended to include the plural forms as well, unless the context clearly indicates otherwise. As used herein, the term "and/or" includes any and all combinations of one or more of the associated listed items and may be abbreviated as "/".

[0150] It will be understood that, although the terms first, second, third etc. may be used herein to describe various elements, components, regions, layers, or steps, these elements, components, regions, layers, and/or steps should not be limited by these terms. Unless the context indicates otherwise, these terms are only used to distinguish one element, component, region, layer, or step from another element, component, region, or step, for example as a naming convention. Thus, a first element, component, region, layer, or step discussed below in one section of the specification could be termed a second element, component, region, layer, or step in another section of the specification or in the claims without departing from the teachings of the present invention. In addition, in certain cases, even if a term is not described using "first," "second," etc., in the specification, it may still be referred to as "first" or "second" in a claim in order to distinguish different claimed elements from each other.

[0151] It will be further understood that the terms "comprises" and/or "comprising," or "includes" and/or "including" when used in this specification, specify the presence of stated features, regions, integers, steps, operations, elements, and/or components, but do not preclude the presence or addition of one or more other features, regions, integers, steps, operations, elements, components, and/or groups thereof.

[0152] It will be understood that when an element is referred to as being "connected" or "coupled" to or "on" another element, it can be directly connected or coupled to or on the other element or intervening elements may be present. In contrast, when an element is referred to as being "directly connected" or "directly coupled" to another element, there are no intervening elements present. Other words used to describe the relationship between elements should be interpreted in a like fashion (e.g., "between" versus "directly between," "adjacent" versus "directly adjacent," etc.). However, the term "contact," as used herein refers to direct contact (i.e., touching) unless the context indicates otherwise.

[0153] Embodiments described herein will be described referring to plane views and/or cross-sectional views by way of ideal schematic views. Accordingly, the exemplary views may be modified depending on manufacturing technologies and/or tolerances. Therefore, the disclosed embodiments are not limited to those shown in the views, but include modifications in configuration formed on the basis of manufacturing processes. Therefore, regions exemplified in figures may have schematic properties, and shapes of regions shown in figures

may exemplify specific shapes of regions of elements to which aspects of the invention are not limited.

[0154] Spatially relative terms, such as "beneath," "below," "lower," "above," "upper" and the like, may be used herein for ease of description to describe one element's or feature's relationship to another element(s) or feature(s) as illustrated in the figures. It will be understood that the spatially relative terms are intended to encompass different orientations of the device in use or operation in addition to the orientation depicted in the figures. For example, if the device in the figures is turned over, elements described as "below" or "beneath" other elements or features would then be oriented "above" the other elements or features. Thus, the term "below" can encompass both an orientation of above and below. The device may be otherwise oriented (rotated 90 degrees or at other orientations) and the spatially relative descriptors used herein interpreted accordingly.

[0155] Terms such as "same," "equal," "planar," or "coplanar," as used herein when referring to orientation, layout, location, shapes, sizes, amounts, or other measures do not necessarily mean an exactly identical orientation, layout, location, shape, size, amount, or other measure, but are intended to encompass nearly identical orientation, layout, location, shapes, sizes, amounts, or other measures within acceptable variations that may occur, for example, due to manufacturing processes. The term "substantially" may be used herein to reflect this meaning.

[0156] Terms such as "about" or "approximately" may reflect sizes, orientations, or layouts that vary only in a small relative manner, and/or in a way that does not significantly alter the operation, functionality, or structure of certain elements. For example, a range from "about 0.1 to about 1" may encompass a range such as a 0%-5% deviation around 0.1 and a 0% to 5% deviation around 1, especially if such deviation maintains the same effect as the listed range.

[0157] Unless otherwise defined, all terms (including technical and scientific terms) used herein have the same meaning as commonly understood by one of ordinary skill in the art to which this disclosure belongs. It will be further understood that terms, such as those defined in commonly used dictionaries, should be interpreted as having a meaning that is consistent with their meaning in the context of the relevant art and/or the present application, and will not be interpreted in an idealized or overly formal sense unless expressly so defined herein.

[0158] As used herein, items described as being "electrically connected" are configured such that an electrical signal can be passed from one item to the other. Therefore, a passive electrically conductive component (e.g., a wire, pad, internal electrical line, etc.) physically connected to a passive electrically insulative component (e.g., a prepreg layer of a printed circuit board, an electrically insulative adhesive connecting two devices, an electrically insulative underfill or mold layer, etc.) is not electrically connected to that component. Moreover, items that are "directly electrically connected," to each other are electrically connected through one or more passive elements, such as, for example, wires, pads, internal electrical lines, resistors, etc. As such, directly electrically connected components do not include components electrically connected through active elements, such as transistors or diodes.

[0159] Components described as thermally connected or in thermal communication are arranged such that heat will follow a path between the components to allow the heat to transfer from the first component to the second component. Simply because two components are part of the same device or board does not make them thermally connected. In general, components which are heat-conductive and directly connected to other heat-conductive or heat-generating components (or connected to those components through intermediate heat-conductive components or in such close proximity as to permit a substantial transfer of heat) will be described as thermally connected to those components, or in thermal communication with those components. On the contrary, two components with heat-insulative materials therebetween, which materials significantly prevent heat transfer between the two components, or only allow for incidental heat transfer, are not described as thermally connected or in thermal communication with each other. The terms "heat-conductive" or "thermally-conductive" do not apply to any material that provides incidental heat conduction, but are intended to refer to materials that are typically known as good heat conductors or known to have utility for transferring heat, or components having similar heat conducting properties as those materials.

[0160] Referring to FIGS. **1** and **2**, an LED tube lamp of one embodiment of the present invention includes a lamp tube **1**, an LED light strip **2** disposed inside the lamp tube **1**, and two end caps **3** respectively disposed at two ends of the lamp tube **1**. The lamp tube **1** may be made of plastic or glass. The sizes of the two end caps **3** may be same or different. Referring to FIG. **1**A, the size of one end cap may in some embodiments be about 30% to about 80% times the size of the other end cap.

[0161] In one embodiment, the lamp tube **1** is made of glass with strengthened or tempered structure to avoid being easily broken and incurring electric shock occurred to conventional glass made tube lamps, and to avoid the fast aging process that often occurs in plastic made tube lamps. The glass made lamp tube **1** may be additionally strengthened or tempered by a chemical tempering method or a physical tempering method in various embodiments of the present invention.

[0162] Referring to FIGS. **3** and **4**, in one embodiment of the invention, each end cap **3** includes an electrically insulating tube **302**, a thermal conductive member **303** sleeved over the electrically insulating tube **302**, and two hollow conductive pins **301** disposed on the electrically insulating tube **302**. The thermal conductive member **303** can be a metal ring that is tubular in shape.

[0163] During fabrication of the LED tube lamp, the rear end region **101** of the lamp tube **1** is inserted into one of the end caps **3**. In some embodiments, the axial length of the inserted portion of the rear end region **101** of the lamp tube **1** accounts for approximately one-third (⅓) to two-thirds (⅔) of the total axial length of the thermal conductive member **303**. One benefit is that, there will be sufficient creepage distance between the hollow conductive pins **301** and the thermal conductive member **303**, and thus it is not easy to form a short circuit leading to dangerous electric shock to individuals. On the other hand, the creepage distance between the hollow conductive pin **301** and the thermal conductive member **303** is increased due to the electrically insulating effect of the electrically insulating tube **302**, and thus a high voltage is applied to the LED tube lamp without causing electric shocks to people.

[0164] Referring to FIGS. **5** and **22**, in one embodiment, an end cap **3'** has a pillar **312** at one end, the top end of the pillar **312** is provided with an opening having a groove **314** of, for example 0.1±1% mm depth at the periphery thereof for positioning a conductive lead **53** as shown in FIG. **22**. The conductive lead **53** passes through the opening on top of the pillar

312 and has its end bent to be disposed in the groove **314**. After that, a conductive metallic cap **311** covers the pillar **312** such that the conductive lead **53** is fixed between the pillar **312** and the conductive metallic cap **311**. In some embodiments, the inner diameter of the conductive metallic cap **311** is 7.56±5% mm, the outer diameter of the pillar **312** is 7.23±5% mm, and the outer diameter of the conductive lead **53** is 0.5±1% mm. Nevertheless, the mentioned sizes are not limited here once that the conductive metallic cap **311** closely covers the pillar **312** without using extra adhesives and therefore completes the electrical connection between the power supply **5** and the conductive metallic cap **311**.

[0165] Referring to FIGS. **2** and **3**, in one embodiment, the end cap **3** may have openings **304** to dissipate heat generated by the power supply modules inside the end cap **3** so as to prevent a high temperature condition inside the end cap **3** that might reduce reliability. In some embodiments, the openings are in a shape of an arc; especially in a shape of three arcs with different size. In one embodiment, the openings are in a shape of three arcs with gradually varying size. The openings on the end cap **3** can be in any one of the above-mentioned shape or any combination thereof.

[0166] In other embodiments, the end cap **3** is provided with a socket (not shown) for installing the power supply module.

[0167] In other embodiments, the width of the LED light strip **2** (along the circumferential direction of the lamp tube) can be widened to occupy a circumference area of the inner circumferential surface of the lamp tube **1**. Since the LED light strip **2** has on its surface a circuit protective layer made of an ink which can reflect lights, the widen part of the LED light strip **2** functions like the reflective film. In some embodiments, a ratio of the length of the LED light strip **2** along the circumferential direction to the circumferential length of the lamp tube **1** is about 0.3 to 0.5. The light emitted from the light sources could be concentrated by the reflection of the widen part of the LED light strip **2**.

[0168] Furthermore, the LED light strip **2** may be an elongated aluminum plate, FR 4 board, or a bendable circuit sheet. When the lamp tube **1** is made of glass, adopting a rigid aluminum plate or FR4 board would make a broken lamp tube, e.g., broken into two parts, remain a straight shape so that a user may be under a false impression that the LED tube lamp is still usable and fully functional, and it is easy for him to incur electric shock upon handling or installation of the LED tube lamp. Because of added flexibility and bendability of the flexible substrate for the LED light strip **2**, the problem faced by the aluminum plate, FR4 board, or conventional **3**-layered flexible board having inadequate flexibility and bendability, are thereby addressed. In certain embodiments, a bendable circuit sheet is adopted as the LED light strip **2** for that such a LED light strip **2** would not allow a ruptured or broken lamp tube to maintain a straight shape and therefore instantly inform the user of the disability of the LED tube lamp and avoid possibly incurred electric shock. The following are further descriptions of the bendable circuit sheet used as the LED light strip **2**.

[0169] Referring to FIG. **7**, as being the LED light strip **2**, a bendable circuit sheet includes a wiring layer **2***a* with conductive effect. The LED light source **202** is configured on the wiring layer **2***a* and electrically connect to the power through the wiring layer **2***a*. The wiring layer with conductive effect, in this specification, is also called conductive layer. Referring to FIG. **7** again, in one embodiment, the LED light strip **2** includes a bendable circuit sheet having a conductive wiring layer **2***a* and a dielectric layer **2***b* that are arranged in a stacked manner, wherein the wiring layer **2***a* and the dielectric layer **2***b* have same areas. The LED light source **202** is disposed on one surface of the wiring layer **2***a*, the dielectric layer **2***b* is disposed on the other surface of the wiring layer **2***a* that is away from the LED light sources **202**. The wiring layer **2***a* is electrically connected to the power supply **5** to carry direct current (DC) signals. Meanwhile, the surface of the dielectric layer **2***b* away from the wiring layer **2***a* is fixed to the inner circumferential surface of the lamp tube **1** by means of the adhesive sheet **4**. The wiring layer **2***a* can be a metal layer or a power supply layer including wires such as copper wires.

[0170] In another embodiment, the outer surface of the wiring layer **2***a* or the dielectric layer **2***b* may be covered with a circuit protective layer made of an ink with function of resisting soldering and increasing reflectivity. Alternatively, the dielectric layer can be omitted and the wiring layer can be directly bonded to the inner circumferential surface of the lamp tube, and the outer surface of the wiring layer **2***a* is coated with the circuit protective layer. Whether the wiring layer **2***a* has a one-layered, or two-layered structure, the circuit protective layer can be adopted. In some embodiments, the circuit protective layer is disposed only on one side/surface of the LED light strip **2**, such as the surface having the LED light source **202**. In some embodiments, the bendable circuit sheet is a one-layered structure made of just one wiring layer **2***a*, or a two-layered structure made of one wiring layer **2***a* and one dielectric layer **2***b*, and thus is more bendable or flexible to curl when compared with the conventional three-layered flexible substrate (one dielectric layer sandwiched with two wiring layers). As a result, the bendable circuit sheet of the LED light strip **2** can be installed in a lamp tube with a customized shape or non-tubular shape, and fitly mounted to the inner surface of the lamp tube. The bendable circuit sheet closely mounted to the inner surface of the lamp tube is preferable in some cases. In addition, using fewer layers of the bendable circuit sheet improves the heat dissipation, lowering the material cost, being more environmental friendly, and has the change to increase the flexible effect.

[0171] Nevertheless, the bendable circuit sheet is not limited to being one-layered or two-layered; in other embodiments, the bendable circuit sheet may include multiple layers of the wiring layers **2***a* and multiple layers of the dielectric layers **2***b*, in which the dielectric layers **2***b* and the wiring layers **2***a* are sequentially stacked in a staggered manner, respectively. These stacked layers are away from the surface of the outermost wiring layer **2***a* which has the LED light source **202** disposed thereon and is electrically connected to the power supply **5**. Moreover, the length of the bendable circuit sheet is greater than the length of the lamp tube.

[0172] Referring to FIG. **23**, in one embodiment, the LED light strip **2** includes a bendable circuit sheet having in sequence a first wiring layer **2***a*, a dielectric layer **2***b*, and a second wiring layer **2***c*. The thickness of the second wiring layer **2***c* is greater than that of the first wiring layer **2***a*, and the length of the LED light strip **2** is greater than that of the lamp tube **1**. The end region of the LED light strip **2** extending beyond the end portion of the lamp tube **1** without disposition of the light source **202** is formed with two separate through holes **203** and **204** to respectively electrically communicate the first wiring layer **2***a* and the second wiring layer **2***c*. The through holes **203** and **204** are not communicated to each other to avoid short.

[0173] In this way, the greater thickness of the second wiring layer **2***c* allows the second wiring layer **2***c* to support the first wiring layer **2***a* and the dielectric layer **2***b*, and meanwhile allow the LED light strip **2** to be mounted onto the inner circumferential surface without being liable to shift or deform, and thus the yield rate of product can be improved. In addition, the first wiring layer **2***a* and the second wiring layer **2***c* are in electrical communication such that the circuit layout of the first wiring layer **2***a* can be extended downward to the second wiring layer **2***c* to reach the circuit layout of the entire LED light strip **2**. Moreover, since the land for the circuit layout becomes two-layered, the area of each single layer and therefore the width of the LED light strip **2** can be reduced such that more LED light strips **2** can be put on a production line to increase productivity.

[0174] Furthermore, the first wiring layer **2***a* and the second wiring layer **2***c* of the end region of the LED light strip **2** that extends beyond the end portion of the lamp tube **1** without disposition of the light source **202** can be used to accomplish the circuit layout of a power supply module so that the power supply module can be directly disposed on the bendable circuit sheet of the LED light strip **2**.

[0175] Referring to FIG. **2**, in one embodiment, the LED light strip **2** has a plurality of LED light sources **202** mounted thereon, and the end cap **3** has a power supply **5** installed therein. The LED light sources **202** and the power supply **5** are electrically connected by the LED light strip **2**. The power supply **5** may be a single integrated unit (i.e., all of the power supply components are integrated into one module unit) installed in one end cap **3**. Alternatively, the power supply **5** may be divided into two separate units (i.e. the power supply components are divided into two parts) installed in two end caps **3**, respectively. When only one end of the lamp tube **1** is strengthened by a glass tempering process, it may be preferable that the power supply **5** is a single integrated unit and installed in the end cap **3** corresponding to the strengthened end **101** of the lamp tube **1**.

[0176] The power supply **5** can be fabricated by various ways. For example, the power supply **5** may be an encapsulation body formed by injection molding a silica gel with high thermal conductivity such as being greater than 0.7 w/m·k. This kind of power supply has advantages of high electrical insulation, high heat dissipation, and regular shape to match other components in an assembly. Alternatively, the power supply **5** in the end caps **3** may be a printed circuit board having components that are directly exposed or packaged by a conventional heat shrink sleeve. The power supply **5** according to some embodiments of the present invention can be a single printed circuit board provided with a power supply module as shown in FIG. **7** or a single integrated unit as shown in FIG. **21**.

[0177] Referring to FIGS. **2** and **21**, in one embodiment of the present invention, the power supply **5** is provided with a male plug **51** at one end and a metal pin **52** at the other end, one end of the LED light strip **2** is correspondingly provided with a female plug **201**, and the end cap **3** is provided with a hollow conductive pin **301** to be connected with an outer electrical power source. Specifically, the male plug **51** is fittingly inserted into the female plug **201** of the LED light strip **2**, while the metal pins **52** are fittingly inserted into the hollow conductive pins **301** of the end cap **3**. The male plug **51** and the female plug **201** function as a connector between the power supply **5** and the LED light strip **2**. Upon insertion of the metal pin **52**, the hollow conductive pin **301** is punched with an external punching tool to slightly deform such that the metal pin **52** of the power supply **5** is secured and electrically connected to the hollow conductive pin **301**. Upon turning on the electrical power, the electrical current passes in sequence through the hollow conductive pin **301**, the metal pin **52**, the male plug **51**, and the female plug **201** to reach the LED light strip **2** and go to the LED light sources **202**. However, the power supply **5** of the present invention is not limited to the modular type as shown in FIG. **21**. The power supply **5** may be a printed circuit board provided with a power supply module and electrically connected to the LED light strip **2** via the abovementioned the male plug **51** and female plug **201** combination.

[0178] In another embodiment, a traditional wire bonding technique can be used instead of the male plug **51** and the female plug **201** for connecting any kind of the power supply **5** and the light strip **2**. That is, a traditional metal wire can be applied to, and one end of the metal wire electrically connects to the power supply and the other end electrically connects to the LED light strip **2**. Furthermore, the wires may be wrapped with an electrically insulating tube to protect a user from being electrically shocked. However, the bonded wires tend to be easily broken during transportation and can therefore cause quality issues.

[0179] In still another embodiment, the connection between the power supply **5** and the LED light strip **2** may be accomplished via tin soldering, rivet bonding, or welding. One way to secure the LED light strip **2** is to provide the adhesive sheet **4** at one side thereof and adhere the LED light strip **2** to the inner surface of the lamp tube **1** via the adhesive sheet **4**. Two ends of the LED light strip **2** can be either fixed to or detached from the inner surface of the lamp tube **1**.

[0180] In case that two ends of the LED light strip **2** are fixed to the inner surface of the lamp tube **1**, it may be preferable that the bendable circuit sheet of the LED light strip **2** is provided with the female plug **201** and the power supply is provided with the male plug **51** to accomplish the connection between the LED light strip **2** and the power supply **5**. In this case, the male plug **51** of the power supply **5** is inserted into the female plug **201** to establish electrical connection.

[0181] In case that two ends of the LED light strip **2** are detached from the inner surface of the lamp tube **1** and that the LED light strip **2** is connected to the power supply **5** via wire-bonding, any movement in subsequent transportation is likely to cause the bonded wires to break. Therefore, a desirable option for the connection between the LED light strip **2** and the power supply **5** could be soldering. Specifically, referring to FIG. **6**, the ends of the LED light strip **2** including the bendable circuit sheet are arranged to pass over the strengthened transition region **103** and directly soldering bonded to an output terminal of the power supply **5** such that the product quality is improved without using wires. In this way, the female plug **201** and the male plug **51** respectively provided for the LED light strip **2** and the power supply **5** are no longer needed.

[0182] Referring to FIG. **8**, an output terminal of the printed circuit board of the power supply **5** may have soldering pads "a" provided with an amount of tin solder with a thickness sufficient to later form a solder joint. Correspondingly, the ends of the LED light strip **2** may have soldering pads "b". The soldering pads "a" on the output terminal of the printed circuit board of the power supply **5** are soldered to the soldering pads "b" on the LED light strip **2** via the tin solder on

the soldering pads "a". The soldering pads "a" and the soldering pads "b" may be face to face during soldering such that the connection between the LED light strip **2** and the printed circuit board of the power supply **5** is the most firm. However, this kind of soldering typically includes that a thermo-compression head presses on the rear surface of the LED light strip **2** and heats the tine solder, i.e. the LED light strip **2** intervenes between the thermo-compression head and the tin solder, and therefore may easily cause reliability problems. Referring to FIG. **14**, a through hole may be formed in each of the soldering pads "b" on the LED light strip **2** to allow the soldering pads "b" overlay the soldering pads "b" without face-to-face and the thermo-compression head directly presses tin solders on the soldering pads "a" on surface of the printed circuit board of the power supply **5** when the soldering pads "a" and the soldering pads "b" are vertically aligned. This is an easy way to accomplish in practice.

[0183] Referring again to FIG. **8**, two ends of the LED light strip **2** detached from the inner surface of the lamp tube **1** are formed as freely extending portions **21**, while most of the LED light strip **2** is attached and secured to the inner surface of the lamp tube **1**. One of the freely extending portions **21** has the soldering pads "b" as mentioned above. Upon assembling of the LED tube lamp, the freely extending end portions **21** along with the soldered connection of the printed circuit board of the power supply **5** and the LED light strip **2** would be coiled, curled up or deformed to be fittingly accommodated inside the lamp tube **1**. When the bendable circuit sheet of the LED light strip **2** includes in sequence the first wiring layer **2***a*, the dielectric layer **2***b*, and the second wiring layer **2***c* as shown in FIG. **23**, the freely extending end portions **21**, which are the end regions of the LED light strip **2** extending beyond the lamp tube **1** without disposition of the light sources **202**, can be used to accomplish the connection between the first wiring layer **2***a* and the second wiring layer **2***c* and arrange the circuit layout of the power supply **5**.

[0184] In this embodiment, during the connection of the LED light strip **2** and the power supply **5**, the soldering pads "b" and the soldering pads "a" and the LED light sources **202** are on surfaces facing toward the same direction and the soldering pads "b" on the LED light strip **2** are each formed with a through hole "e" as shown in FIG. **14** such that the soldering pads "b" and the soldering pads "a" communicate with each other via the through holes "e". When the freely extending end portions **21** are deformed due to contraction or curling up, the soldered connection of the printed circuit board of the power supply **5** and the LED light strip **2** exerts a lateral tension on the power supply **5**. Furthermore, the soldered connection of the printed circuit board of the power supply **5** and the LED light strip **2** also exerts a downward tension on the power supply **5** when compared with the situation where the soldering pads "a" of the power supply **5** and the soldering pads "b" of the LED light strip **2** are face to face. This downward tension on the power supply **5** comes from the tin solders inside the through holes "e" and forms a stronger and more secure electrical connection between the LED light strip **2** and the power supply **5**.

[0185] Referring to FIG. **9**, in one embodiment, the soldering pads "b" of the LED light strip **2** are two separate pads to electrically connect the positive and negative electrodes of the bendable circuit sheet of the LED light strip **2**, respectively. The size of the soldering pads "b" may be, for example, about 3.5×2 mm^2. The printed circuit board of the power supply **5** is correspondingly provided with soldering pads "a" having reserved tin solders, and the height of the tin solders suitable for subsequent automatic soldering bonding process is generally, for example, about 0.1 to 0.7 mm, in some embodiments about 0.3 to about 0.5 mm, and in some additional embodiments about 0.4 mm. An electrically insulating through hole "c" may be formed between the two soldering pads "b" to isolate and prevent the two soldering pads from electrically short during soldering. Furthermore, an extra positioning opening "d" may also be provided behind the electrically insulating through hole "c" to allow an automatic soldering machine to quickly recognize the position of the soldering pads "b".

[0186] For the sake of achieving scalability and compatibility, the amount of the soldering pads "b" on each end of the LED light strip **2** may be more than one such as two, three, four, or more than four. When there is only one soldering pad "b" provided at each end of the LED light strip **2**, the two ends of the LED light strip **2** are electrically connected to the power supply **5** to form a loop, and various electrical components can be used. For example, a capacitance may be replaced by an inductance to perform current regulation. In this specification, the meaning of "inductance" includes "inductor", the meaning of "capacitance" includes "capacitor", and the meaning of "resistance" includes "resistor". Referring to FIGS. **10** to **13**, when each end of the LED light strip **2** has three soldering pads, the third soldering pad can be grounded; when each end of the LED light strip **2** has four soldering pads, the fourth soldering pad can be used as a signal input terminal. Correspondingly, in some embodiments, the power supply **5** should have same amount of soldering pads "a" as that of the soldering pads "b" on the LED light strip **2**. In some embodiments, as long as electrical short between the soldering pads "b" can be prevented, the soldering pads "b" should be arranged according to the dimension of the actual area for disposition, for example, three soldering pads can be arranged in a row or two rows. In other embodiments, the amount of the soldering pads "b" on the bendable circuit sheet of the LED light strip **2** may be reduced by rearranging the circuits on the bendable circuit sheet of the LED light strip **2**. The lesser the amount of the soldering pads, the easier the fabrication process becomes. On the other hand, a greater number of soldering pads may improve and secure the electrical connection between the LED light strip **2** and the output terminal of the power supply **5**.

[0187] Referring to FIG. **14**, in another embodiment, the soldering pads "b" each is formed with a through hole "e" having a diameter generally of about 1 to 2 mm, in some preferred embodiments of about 1.2 to 1.8 mm, and in yet further preferred embodiments of about 1.5 mm. The through hole "e" communicates the soldering pad "a" with the soldering pad "b" so that the tin solder on the soldering pads "a" passes through the through holes "e" and finally reach the soldering pads "b". A smaller through hole "e" would make it difficult for the tin solder to pass. The tin solder accumulates around the through holes "e" upon exiting the through holes "e" and condense to form a solder ball "g" with a larger diameter than that of the through holes "e" upon condensing. Such a solder ball "g" functions as a rivet to further increase the stability of the electrical connection between the soldering pads "a" on the power supply **5** and the soldering pads "b" on the LED light strip **2**.

[0188] Referring to FIGS. **15** to **16**, in other embodiments, when a distance from the through hole "e" to the side edge of the LED light strip **2** is less than 1 mm, the tin solder may pass

through the through hole "e" to accumulate on the periphery of the through hole "e", and extra tin solder may spill over the soldering pads "b" to reflow along the side edge of the LED light strip **2** and join the tin solder on the soldering pads "a" of the power supply **5**. The tin solder then condenses to form a structure like a rivet to firmly secure the LED light strip **2** onto the printed circuit board of the power supply **5** such that reliable electrical connection is achieved. Referring to FIGS. **17** and **18**, in another embodiment, the through hole "e" can be replaced by a notch "f" formed at the side edge of the soldering pads "b" for the tin solder to easily pass through the notch "f" and accumulate on the periphery of the notch "f" and to form a solder ball with a larger diameter than that of the notch "e" upon condensing. Such a solder ball may be formed like a C-shape rivet to enhance the secure capability of the electrically connecting structure.

[0189] The abovementioned through hole "e" or notch "f" might be formed in advance of soldering or formed by direct punching with a thermo-compression head during soldering. The portion of the thermo-compression head for touching the tin solder may be flat, concave, or convex, or any combination thereof. The portion of the thermo-compression head for restraining the object to be soldered such as the LED light strip **2** may be strip-like or grid-like. The portion of the thermo-compression head for touching the tin solder does not completely cover the through hole "e" or the notch "f" to make sure that the tin solder is able to pass through the through hole "e" or the notch "f". The portion of the thermo-compression head being concave may function as a room to receive the solder ball. In other embodiments, the bendable circuit sheet of the LED light strip **2** has a position hole to provide a precisely position recognition for the soldering pads "a" of the power supply **5** to weld the soldering pads "b" on the LED light strip **2** during welding.

[0190] Referring to FIGS. **19** and **20**, in another embodiment, the LED light strip **2** and the power supply **5** may be connected by utilizing a circuit board assembly **25** configured a power supply module **250** instead of soldering bonding. The circuit board assembly **25** has a long circuit sheet **251** and a short circuit board **253** that are adhered to each other with the short circuit board **253** being adjacent to the side edge of the long circuit sheet **251**. The short circuit board **253** may be provided with the power supply module **250** to form the power supply **5**. The short circuit board **253** is stiffer or more rigid than the long circuit sheet **251** to be able to support the power supply module **250**.

[0191] The long circuit sheet **251** may be the bendable circuit sheet of the LED light strip **2** including a wiring layer **2***a* as shown in FIG. **7**. The wiring layer **2***a* of the LED light strip **2** and the power supply module **250** may be electrically connected in various manners depending on the demand in practice. As shown in FIG. **19**, the power supply module **250** and the long circuit sheet **251** having the wiring layer **2***a* on surface are on the same side of the short circuit board **253** such that the power supply module **250** is directly connected to the long circuit sheet **251**. As shown in FIG. **20**, alternatively, the power supply module **250** and the long circuit sheet **251** including the wiring layer **2***a* on surface are on opposite sides of the short circuit board **253** such that the power supply module **250** is directly connected to the short circuit board **253** and indirectly connected to the wiring layer **2***a* of the LED light strip **2** by way of the short circuit board **253**.

[0192] FIG. **24**A is a block diagram of a system including an LED tube lamp including a power supply module according to certain embodiments. Referring to FIG. **24**A, an AC power supply **508** is used to supply an AC supply signal. A lamp driving circuit **505** receives the AC supply signal from the AC power supply **508** and then converts it into an AC driving signal. An LED tube lamp **500** receives the AC driving signal from the lamp driving circuit **505** and is thus driven to emit light. In this embodiment, the LED tube lamp **500** is power-supplied at its both end caps respectively having two pins **501** and **502** and two pins **503** and **504**, which are coupled to the lamp driving circuit **505** to concurrently receive the AC driving signal to drive an LED unit (not shown) in the LED tube lamp **500** to emit light. However, in other embodiments, each end cap of the LED tube lamp could have only at least one pin for receiving the AC driving signal. That is, it is unnecessary to have two pins used in each end cap for the purpose of passing electricity through the both ends of the LED tube lamp **500**. In the present embodiment, the AC power supply **508** could be commercial electricity with 100-277 voltages in frequency of 50 Hz or 60 Hz. The lamp driving circuit **505** receives the AC supply signal from the AC power supply **508** and then converts it into the AC driving signal as an external driving signal. The lamp driving circuit **505** could be an electronic ballast and is used to convert the signal of commercial electricity into high-frequency and high-voltage AC driving signal. The common types of electronic ballast, such as instant-start electronic ballast, program-start electronic ballast, and rapid-start electronic ballast, can be applied to the LED tube lamp of the present invention. In some embodiments, the voltage of the AC driving signal is bigger than 300V and prefers 400-700V with frequency being higher than 10 kHz and preferring 20-50 kHz. FIG. **24**B is a block diagram of an LED lamp according to certain embodiments. Referring to FIG. **24**B, the power supply module of the LED lamp summarily includes a rectifying circuit **510**, a filtering circuit **520**, and a rectifying circuit **540**, and may comprise a portion of an LED lighting module **530**. The power supply module of the LED lamp could be used in the LED tube lamp **500** with a dual-end power supply in FIG. **24**A. The rectifying circuit **510** is coupled to pins **501** and **502** to receive and then rectify an external driving signal conducted by pins **501** and **502**. The rectifying circuit **540** is coupled to pins **503** and **504** to receive and then rectify an external driving signal conducted by pins **503** and **504**. Therefore, the power supply module of the LED lamp may include two rectifying circuits **510** and **540** configured to output a rectified signal at output terminals **511** and **512**. The filtering circuit **520** is coupled to the output terminals **511** and **512** to receive and then filter the rectified signal, so as to output a filtered signal to filtering output terminals **521** and **522**. The LED lighting module **530** is coupled to the filtering output terminals **521** and **522** to receive the filtered signal and thereby to drive an LED unit (not shown) in the LED lighting module **530** to emit light.

[0193] FIG. **25**A is a schematic diagram of a rectifying circuit according to an embodiment of the present invention. Referring to FIG. **25**A, a rectifying circuit **610**, i.e. a bridge rectifier, includes four rectifying diodes **611**, **612**, **613**, and **614**, configured to full-wave rectify a received signal. The diode **611** has an anode connected to the output terminal **512**, and a cathode connected to the pin **502**. The diode **612** has an anode connected to the output terminal **512**, and a cathode connected to the pin **501**. The diode **613** has an anode connected to the pin **502**, and a cathode connected to the output

terminal **511**. The diode **614** has an anode connected to the pin **501**, and a cathode connected to the output terminal **511**.

[0194] When the pins **501** and **502** receive an AC signal, the rectifying circuit **610** operates as follows. During the connected AC signal's positive half cycle, the AC signal is input through the pin **501**, the diode **614**, and the output terminal **511** in sequence, and later output through the output terminal **512**, the diode **611**, and the pin **502** in sequence. During the connected AC signal's negative half cycle, the AC signal is input through the pin **502**, the diode **613**, and the output terminal **511** in sequence, and later output through the output terminal **512**, the diode **612**, and the pin **501** in sequence. Therefore, during the connected AC signal's full cycle, the positive pole of the rectified signal produced by the rectifying circuit **610** keeps at the output terminal **511**, and the negative pole of the rectified signal remains at the output terminal **512**. Accordingly, the rectified signal produced or output by the rectifying circuit **610** is a full-wave rectified signal.

[0195] When the pins **501** and **502** are coupled to a DC power supply to receive a DC signal, the rectifying circuit **610** operates as follows. When the pin **501** is coupled to the positive end of the DC power supply and the pin **502** to the negative end of the DC power supply, the DC signal is input through the pin **501**, the diode **614**, and the output terminal **511** in sequence, and later output through the output terminal **512**, the diode **611**, and the pin **502** in sequence. When the pin **501** is coupled to the negative end of the DC power supply and the pin **502** to the positive end of the DC power supply, the DC signal is input through the pin **502**, the diode **613**, and the output terminal **511** in sequence, and later output through the output terminal **512**, the diode **612**, and the pin **501** in sequence. Therefore, no matter what the electrical polarity of the DC signal is between the pins **501** and **502**, the positive pole of the rectified signal produced by the rectifying circuit **610** keeps at the output terminal **511**, and the negative pole of the rectified signal remains at the output terminal **512**.

[0196] Therefore, the rectifying circuit **610** in this embodiment can output or produce a proper rectified signal regardless of whether the received input signal is an AC or DC signal.

[0197] FIG. **25**B is a schematic diagram of a rectifying circuit according to an embodiment of the present invention. Referring to FIG. **25**B, a rectifying circuit **710** includes two rectifying diodes **711** and **712** configured to half-wave rectify a received signal. The diode **711** has an anode connected to the pin **502**, and a cathode connected to the output terminal **511**. The diode **712** has an anode connected to the output terminal **511**, and a cathode connected to the pin **501**. The output terminal **512** may be omitted or grounded depending on applications in practice.

[0198] Next, exemplary operation(s) of the rectifying circuit **710** is described as follows.

[0199] In one embodiment, during a received AC signal's positive half cycle, the electrical potential at the pin **501** is higher than that at the pin **502**, so the diodes **711** and **712** are both in a cutoff state as being reverse-biased and make the rectifying circuit **710** stop outputting a rectified signal. During a received AC signal's negative half cycle, the electrical potential at the pin **501** is lower than that at the pin **502**, so the diodes **711** and **712** are both in a conducting state as being forward-biased and allow the AC signal to be input through the diode **711** and the output terminal **511**, and later to be output through the output terminal **512**, a ground terminal, or another end of the LED lamp which is not directly connected to the rectifying circuit **710**. Accordingly, the rectified signal produced or output by the rectifying circuit **710** is a half-wave rectified signal.

[0200] FIG. **25**C is a schematic diagram of a rectifying circuit according to an embodiment of the present invention. Referring to FIG. **25**C, a rectifying circuit **810** includes a rectifying unit **815** and a terminal adapter circuit **541**. In this embodiment, the rectifying unit **815** comprises a half-wave rectifier circuit including two diodes **811** and **812**, and is configured to half-wave rectification. The diode **811** has an anode connected to an output terminal **512**, and a cathode connected to a half-wave node **819**. The diode **812** has an anode connected to the half-wave node **819**, and a cathode connected to an output terminal **511**. The terminal adapter circuit **541** is coupled to the half-wave node **819** and the pins **501** and **502** to transmit a signal received at the pin **501** and/or the pin **502** to the half-wave node **819**. By means of the terminal adapting function of the terminal adapter circuit **541**, the rectifying circuit **810** allows of two input terminals (connected to the pins **501** and **502**) and two output terminals **511** and **512**.

[0201] Next, in certain embodiments, the rectifying circuit **810** operates as follows.

[0202] During a received AC signal's positive half cycle, the AC signal may be input through the pin **501** or **502**, the terminal adapter circuit **541**, the half-wave node **819**, the diode **812**, and the output terminal **511** in sequence, and later output through another end or circuit of the LED tube lamp. During a received AC signal's negative half cycle, the AC signal may be input through another end or circuit of the LED tube lamp, and later output through the output terminal **512**, the diode **811**, the half-wave node **819**, the terminal adapter circuit **541**, and the pin **501** or **502** in sequence.

[0203] It's worth noting that the terminal adapter circuit **541** may include resistor(s), capacitor(s), inductor(s), or any combination thereof, for performing at least one of functions of current/voltage limiting, types of protection, current/voltage regulation, and so forth. Descriptions of these functions are presented below.

[0204] In practice, the rectifying unit **815** and terminal adapter circuit **541** may be interchanged in position (as shown in FIG. **25**D) without altering the function of half-wave rectification. FIG. **25**D is a schematic diagram of a rectifying circuit according to an embodiment of the present invention. Referring to FIG. **25**D, the diode **811** has an anode connected to the pin **502** and the diode **812** has a cathode connected to the pin **501**. The cathode of diode **811** and the anode of diode **812** are connected to the half-wave node **819**. The terminal adapter circuit **541** is coupled to the half-wave node **819** and the output terminals **511** and **512**. During a received AC signal's positive half cycle, the AC signal may be input through another end or circuit of the LED tube lamp, and later output through the output terminal **512** or **511**, the terminal adapter circuit **541**, the half-wave node **819**, the diode **812**, and the pin **501** in sequence. During a received AC signal's negative half cycle, the AC signal may be input through the pin **502**, the diode **811**, the half-wave node **819**, the terminal adapter circuit **541**, and the output terminal **511** or **512** in sequence, and later output through another end or circuit of the LED tube lamp.

[0205] It is noticeable that the terminal adapter circuit **541** in embodiments shown in FIGS. **25**C and **25**D may be omitted and is therefore depicted by a dotted line. If the terminal adapter circuit **541** of FIG. **25**C is omitted, the pins **501** and

502 will be coupled to the half-wave node **819**. If the terminal adapter circuit **541** of FIG. **25**D is omitted, the output terminals **511** and **512** will be coupled to the half-wave node **819**.

[0206] The rectifying circuit as shown and explained in FIGS. **25**A-D can constitute or be the rectifying circuit **540** shown in FIG. **24**B, as having the pins **503** and **504** for conducting instead of the pins **501** and **502**.

[0207] Next, an explanation follows as to choosing embodiments and their combinations of the rectifying circuits **510** and **540**, with reference to FIG. **24**B.

[0208] The rectifying circuits **510** and **540** in embodiments shown in FIG. **24**B may each comprise any one of the rectifying circuits in FIGS. **25**A-D, and the terminal adapter circuit **541** in FIGS. **25**C-D may be omitted without altering the rectification function used by an LED tube lamp. When the rectifying circuits **510** and **540** each comprise a half-wave rectifier circuit described in FIGS. **25**B-D, during a received AC signal's positive or negative half cycle, the AC signal may be input to either the rectifying circuit **510** or the rectifying circuit **540**, and later output from another. Further, when the rectifying circuits **510** and **540** each comprise the rectifying circuit described in FIG. **25**C or **25**D, or when they comprise the rectifying circuits in FIGS. **25**C and **25**D individually, only one terminal adapter circuit **541** may be needed for functions of current/voltage limiting, types of protection, current/voltage regulation, etc. within the rectifying circuits **510** and **540**, and another terminal adapter circuit **541** within the rectifying circuit **510** or **540** can be ignored.

[0209] FIG. **26**A is a schematic diagram of the terminal adapter circuit according to an embodiment of the present invention. Referring to FIG. **26**A, a terminal adapter circuit **641** includes a capacitor **642** having an end connected to the pins **501** and **502**, and the other end thereof connected to the half-wave node **819**. The capacitor **642** has an equivalent impedance to an AC signal. This impedance increases as the frequency of the AC signal decreases, and decreases as the frequency increases. Therefore, the capacitor **642** in the terminal adapter circuit **641** in this embodiment works as a high-pass filter. Further, the terminal adapter circuit **641** is connected in series to an LED unit in the LED tube lamp, producing an equivalent impedance of the terminal adapter circuit **641** to perform a current/voltage limiting function on the LED unit, thereby preventing damaging of the LED unit from an excessive voltage across and/or current in the LED unit. In addition, selecting the capacitance value of the capacitor **642** according to the frequency of the AC signal can further enhance current/voltage regulation to the LED assembly.

[0210] It's worth noting that the terminal adapter circuit **641** may further include a capacitor **645** and/or capacitor **646**. The capacitor **645** has an end connected to the half-wave node **819**, and the other end connected to the pin **503**. The capacitor **646** has an end connected to the half-wave node **819**, and the other end connected to the pin **504**. For example, the half-wave node **819** may be a common connection node between the capacitors **645** and **646**. And the capacitor **642** acting as a current regulating capacitor is coupled to the common connection node and the pins **501** and **502**. In such a structure, the series-connected capacitors **642** and **645** exist between one of the pins **501** and **502** and the pin **503**, and/or the series-connected capacitors **642** and **646** exist between one of the pins **501** and **502** and the pin **504**. Through equivalent impedances of series-connected capacitors, voltages from the AC signal are divided. The divided voltage on the capacitors **645** and **646** prefers 100-500V, and 300-400V would be a preferred range. Referring to FIGS. **24**B and **26**A, according to the ratios between equivalent impedances of the series-connected capacitors, the voltages respectively across the capacitor **642** in the rectifying circuit **510**, the filtering circuit **520**, and the LED lighting module **530** can be controlled to make the current flowing through an LED module in the LED lighting module **530** being limited within a current rating, and then to protect/prevent the filtering circuit **520** and the LED lighting module **530** from being damaged by excessive voltages.

[0211] FIG. **26**B is a schematic diagram of the terminal adapter circuit according to an embodiment of the present invention. Referring to FIG. **26**B, a terminal adapter circuit **741** includes two capacitors **743** and **744**. The capacitor **743** has an end connected to the pin **501**, and the other end connected to the half-wave node **819**. The capacitor **744** has an end connected to the pin **502**, and the other end connected to the half-wave node **819**. Compared to the terminal adapter circuit **641** in FIG. **26**A, the terminal adapter circuit **741** has the capacitors **743** and **744** in place of the capacitor **642**. The capacitance values of the capacitors **743** and **744** may be the same as each other, or may differ from each other depending on the magnitudes of signals received by the pins **501** and **502**.

[0212] Also, the terminal adapter circuit **741** may further comprise a capacitor **745** and/or a capacitor **746**, and two of them are respectively connected to the pins **503** and **504**. Thus, each of the pins **501** and **502** and each of the pins **503** and **504** may be connected to a capacitor in series to achieve the functions of voltage division and other protections.

[0213] FIG. **26**C is a schematic diagram of the terminal adapter circuit according to an embodiment of the present invention. Referring to FIG. **26**C, a terminal adapter circuit **841** includes three capacitors **842**, **843**, and **844**. The capacitors **842** and **843** are connected in series between the pin **501** and the half-wave node **819**. The capacitors **842** and **844** are connected in series between the pin **502** and the half-wave node **819**. In such a circuit structure, if any one of the capacitors **842**, **843**, and **844** is shorted, there is still at least one capacitor (of the other two capacitors) between the pin **501** and the half-wave node **819** and between the pin **502** and the half-wave node **819**, which performs a current-limiting function. Therefore, in the event that a user accidentally gets an electric shock, this circuit structure will prevent an excessive current from flowing through and then seriously hurting the body of the user.

[0214] Likewise, the terminal adapter circuit **841** may further include a capacitor **845** and/or a capacitor **846**, and two of them are respectively connected to the pins **503** and **504**. Thus, each of the pins **501** and **502** and each of the pins **503** and **504** may be connected to a capacitor in series to achieve the functions of voltage division and other protections.

[0215] FIG. **26**D is a schematic diagram of the terminal adapter circuit according to an embodiment of the present invention. Referring to FIG. **26**D, a terminal adapter circuit **941** includes two fuses **947** and **948**. The fuse **947** has an end connected to the pin **501**, and the other end connected to the half-wave node **819**. The fuse **948** has an end connected to the pin **502**, and the other end connected to the half-wave node **819**. With the fuses **947** and **948**, when the current passing through each of the pins **501** and **502** exceeds the current threshold corresponding to the fuse **947** or **948**, the corre-

sponding fuse **947** or **948** will accordingly melt and then break the circuit to achieve overcurrent protection.

[0216] Each of the embodiments for the terminal adapter circuits coupled to the pins **501** and **502** mentioned above can be used or included in the rectifying circuit **540** when the pins **503** and **504** and the pins **501** and **502** are interchanged in position.

[0217] Capacitance values of the capacitors in the embodiments of the terminal adapter circuits shown and described above, in some embodiments for example, are desirable to be in the range of about 100 pF-100 nF. Also, a capacitor used in the embodiments may be equivalently replaced by two or more capacitors connected in series or parallel. For example, each of the capacitors **642** and **842** may be replaced by two series-connected capacitors, one having a capacitance value chosen from the range of, for example, about 1.0 nF to 2.5 nF and being 1.5 nF in some embodiments, and another having a capacitance value chosen from the range of, such as about 1.5 nF to 3.0 nF and being 2.2 nF in some embodiments.

[0218] FIG. **27**A is a block diagram of the filtering circuit according to an embodiment of the present invention. A rectifying circuit **510** is shown in FIG. **27**A for illustrating its connection with other components, without intending a filtering circuit **520** to include the rectifying circuit **510**. Referring to FIG. **27**A, the filtering circuit **520** includes a filtering unit **523** coupled to two rectifying output terminals **511** and **512** to receive and to filter out ripples of a rectified signal from the rectifying circuit **510**. Accordingly, the waveform of a filtered signal is smoother than that of the rectified signal. The filtering circuit **520** may further include another filtering unit **524** coupled between a rectifying circuit and a pin correspondingly, for example, between the rectifying circuit **510** and the pin **501**, the rectifying circuit **510** and the pin **502**, the rectifying circuit **540** and the pin **503**, and/or the rectifying circuit **540** and the pin **504**. The filtering unit **524** is used to filter a specific frequency, for example, to filter out a specific frequency of an external driving signal. In this embodiment, the filtering unit **524** is coupled between the rectifying circuit **510** and the pin **501**. The filtering circuit **520** may further include another filtering unit **525** coupled between one of the pins **501** and **502** and one of the diodes of the rectifying circuit **510**, or between one of the pins **503** and **504** and one of the diodes of the rectifying circuit **540** to reduce or filter out electromagnetic interference (EMI). In this embodiment, the filtering unit **525** is coupled between the pin **501** and one of diodes of the rectifying circuit **510** (not shown in FIG. **27**A). Since the filtering units **524** and **525** may be present or omitted depending on actual circumstances of their uses, they are depicted by a dotted line in FIG. **27**A.

[0219] FIG. **27**B is a schematic diagram of the filtering unit according to an embodiment of the present invention. Referring to FIG. **27**B, a filtering unit **623** includes a capacitor **625** having an end coupled to the output terminal **511** and a filtering output terminal **521** and the other end thereof coupled to the output terminal **512** and a filtering output terminal **522**, and is configured to low-pass filter a rectified signal from the output terminals **511** and **512**, so as to filter out high-frequency components of the rectified signal and thereby output a filtered signal at the filtering output terminals **521** and **522**.

[0220] FIG. **27**C is a schematic diagram of the filtering unit according to an embodiment of the present invention. Referring to FIG. **27**C, a filtering unit **723** includes a pi filter circuit including a capacitor **725**, an inductor **726**, and a capacitor **727**. As is well known, a pi filter circuit looks like the symbol π in its shape or structure. The capacitor **725** has an end connected to the output terminal **511** and coupled to the filtering output terminal **521** through the inductor **726**, and has another end connected to the output terminal **512** and the filtering output terminal **522**. The inductor **726** is coupled between output terminal **511** and the filtering output terminal **521**. The capacitor **727** has an end connected to the filtering output terminal **521** and coupled to the output terminal **511** through the inductor **726**, and has another end connected to the output terminal **512** and the filtering output terminal **522**.

[0221] As seen between the output terminals **511** and **512** and the filtering output terminals **521** and **522**, the filtering unit **723** compared to the filtering unit **623** in FIG. **27**B additionally has an inductor **726** and a capacitor **727**, which perform the function of low-pass filtering like the capacitor **725** does. Therefore, the filtering unit **723** in this embodiment compared to the filtering unit **623** in FIG. **27**B has a better ability to filter out high-frequency components to output a filtered signal with a smoother waveform.

[0222] The inductance values of the inductor **726** in the embodiments mentioned above are chosen in the range of, for example in some embodiments, about 10 nH to 10 mH. And the capacitance values of the capacitors **625**, **725**, and **727** in the embodiments stated above are chosen in the range of, for example in some embodiments, about 100 pF to 1 uF.

[0223] FIG. **27**D is a schematic diagram of the filtering unit according to an embodiment of the present invention. Referring to FIG. **27**D, a filtering unit **824** includes a capacitor **825** and an inductor **828** connected in parallel. The capacitor **825** has an end coupled to the pin **501**, and the other end coupled to the output terminal **511**, and is configured to high-pass filter an external driving signal input at the pin **501** so as to filter out low-frequency components of the external driving signal. The inductor **828** has an end coupled to the pin **501** and the other end coupled to the output terminal **511**, and is configured to low-pass filter an external driving signal input at the pin **501** so as to filter out high-frequency components of the external driving signal. Therefore, the combination of the capacitor **825** and the inductor **828** works to present high impedance to one or more specific frequencies in an external driving signal. That is, the parallel-connected capacitor and inductor work to present a biggest equivalent impedance to a specific frequency in the external driving signal.

[0224] Through appropriately choosing a capacitance value for the capacitor **825** and an inductance value for the inductor **828**, a center frequency f on the high-impedance band may be set at a specific value given by

$$f = \frac{1}{2\pi\sqrt{LC}},$$

where L denotes inductance of the inductor **828** and C denotes capacitance of the capacitor **825**. The center frequency in some embodiments is in the range of about 20-30 kHz, and may be in some cases about 25 kHz. And an LED lamp with filtering unit **824** is able to be certified under safety standards, for a specific center frequency, as provided by Underwriters Laboratories (UL).

[0225] It's worth noting that the filtering unit **824** may further include a resistor **829** coupled between the pin **501** and the filtering output terminal **511**. In FIG. **27**D, the resistor **829** is connected in series to the parallel-connected capacitor **825**

and inductor **828**. For example, the resistor **829** may be coupled between the pin **501** and the parallel-connected capacitor **825** and inductor **828**, or may be coupled between the output terminal **511** and the parallel-connected capacitor **825** and inductor **828**. In this embodiment, the resistor **829** is coupled between the pin **501** and the parallel-connected capacitor **825** and inductor **828**. Further, the resistor **829** is configured to adjust the quality factor (Q) of the LC circuit comprising the capacitor **825** and the inductor **828** to make the filtering unit **824** adapting to application environments with different quality factor requirements. Since the resistor **829** is an optional component, it is depicted in a dotted line in FIG. **27**D.

[0226] The capacitance values of the capacitor **825**, in some embodiments, are in the range of about 10 nF-2 uF. The inductance values of the inductor **828** are smaller than 2 mH in some embodiments, and may be in some cases smaller than 1 mH. The resistance values of the resistor **829** are bigger than 50 ohms in some embodiments, and may be in some cases bigger than 500 ohms.

[0227] In addition to the filtering circuits shown and described in the above embodiments, the traditional low-pass or band-pass filters can also be used as the filtering unit in the filtering circuit for the present invention.

[0228] FIG. **27**E is a schematic diagram of the filtering unit according to an embodiment of the present invention. Referring to FIG. **27**E, in this embodiment, a filtering unit **925** is disposed in the rectifying circuit **610** as shown in FIG. **25**A, and is configured for reducing the EMI (Electromagnetic interference) caused by the rectifying circuit **610** and/or other circuits. In this embodiment, the filtering unit **925** includes an EMI-reducing capacitor coupled between the pin **501** and the anode of the rectifying diode **614**, and also between the pin **502** and the anode of the rectifying diode **613** to reduce the EMI associated with the positive half cycle of the AC driving signal received at the pins **501** and **502**. The EMI-reducing capacitor of the filtering unit **925** is also coupled between the pin **501** and the cathode of the rectifying diode **612**, and between the pin **502** and the cathode of the rectifying diode **611** to reduce the EMI associated with the negative half cycle of the AC driving signal received at the pins **501** and **502**. In some embodiments, the rectifying circuit **610** includes a full-wave bridge rectifier circuit including four rectifying diodes **611**, **612**, **613**, and **614**. The full-wave bridge rectifier circuit has a first filtering node connecting the anode of the diode **613** and the cathode of the diode **611**, and a second filtering node connecting the anode of the diode **614** and the cathode of the diode **612**. And the EMI-reducing capacitor of the filtering unit **925** is coupled between the first filtering node and the second filtering node.

[0229] Similarly, with reference to FIGS. **25**C and **26**A-C, any capacitor in each of the circuits in FIGS. **26**A-C is coupled between the pins **501** and **502** (or the pins **503** and **504**) and any diode in FIG. **25**C, so any or each capacitor in FIGS. **26**A-C can work as an EMI-reducing capacitor to achieve the function of reducing EMI. For example, the rectifying circuit **510** in FIG. **24**B may include a half-wave rectifier circuit including two rectifying diodes and having a half-wave node respectively connecting an anode and a cathode of the two rectifying diodes, and any or each capacitor in FIGS. **26**A-C may be coupled between the half-wave node and at least one of the pins **501** and **502**. And the rectifying circuit **540** in FIG. **24**B may include a half-wave rectifier circuit including two rectifying diodes and having a half-wave node respectively connecting an anode and a cathode of the two rectifying diodes, and any or each capacitor in FIGS. **26**A-C may be coupled between the half-wave node and at least one of the pins **503** and **504**.

[0230] However, the filtering unit **925** coupled between the pins **501** and **502** is equal to make them short. Referring to FIGS. **26**A-C with the state of the filtering unit **925** making the pins **501** and **502** short, one of the capacitors **645**, **646**, **745**, **746**, **845**, and **846** in each corresponding embodiment can be ignored. In spite of the external AC signal being output from the pin **501** or **502**, the voltage-divided function still can be achieved after omitting one of the capacitors **645**, **646**, **745**, **746**, **845**, and **846** in each corresponding embodiment.

[0231] It's worth noting that the EMI-reducing capacitor in the embodiment of FIG. **27**E may also act as the capacitor **825** in the filtering unit **824** shown in FIG. **27**D, in combination with the inductor **828**, to achieve the functions of reducing EMI and presenting high impedance to an external driving signal at specific frequencies simultaneously. For example, when the rectifying circuit includes a full-wave bridge rectifier circuit, the capacitor **825** of the filtering unit **824** may be coupled between the first filtering node and the second filtering node of the full-wave bridge rectifier circuit. When the rectifying circuit includes a half-wave rectifier circuit, the capacitor **825** of the filtering unit **824** may be coupled between the half-wave node of the half-wave rectifier circuit and at least one of the pins **501** and **502**.

[0232] FIG. **28**A is a schematic diagram of an LED module according to an embodiment of the present invention. Referring to FIG. **28**A, an LED module **630** has an anode connected to a filtering output terminal **521**, a cathode connected to a filtering output terminal **522**, and includes at least one LED unit **632**, such as the light source mentioned above. When two or more LED units are included, they are connected in parallel. The anode of each LED unit **632** is connected to the anode of LED module **630** to couple with the filtering output terminal **521**, and the cathode of each LED unit **632** is connected to the cathode of LED module **630** to couple to the filtering output terminal **522**. Each LED unit **632** includes at least one LED **631**. When multiple LEDs **631** are included in an LED unit **632**, they are connected in series with the anode of the first LED **631** connected to the anode of this LED unit **632** and the cathode of the first LED **631** connected to the next or second LED **631**. And the anode of the last LED **631** in this LED unit **632** is connected to the cathode of a previous LED **631** and the cathode of the last LED **631** connected to the cathode of this LED unit **632**.

[0233] It's noticeable that the LED module **630** may produce a current detection signal S**531** reflecting the magnitude of current through the LED module **630** and being used for controlling or detecting the LED module **630**.

[0234] FIG. **28**B is a schematic diagram of an LED module according to an embodiment of the present invention. Referring to FIG. **28**B, an LED module **630** has an anode connected to a filtering output terminal **521**, a cathode connected to a filtering output terminal **522**, and includes at least two LED units **732** with the anode of each LED unit **732** connected to the anode of LED module **630** and the cathode of each LED unit **732** connected to the cathode of LED module **630**. Each LED unit **732** includes at least two LEDs **731** connected in the same way as those described in FIG. **28**A. For example, the anode of the first LED **731** in an LED unit **732** is connected to the anode of this LED unit **732**, the cathode of the first LED **731** is connected to the anode of the next or second LED **731**,

and the cathode of the last LED **731** is connected to the cathode of this LED unit **732**. Further, LED units **732** in an LED module **630** are connected to each other in this embodiment. All of the n-th LEDs **731** in the related LED units **732** thereof are connected by their anodes and cathodes, such as those shown in FIG. **28**B but not limit to, where n is a positive integer. In this way, the LEDs in the LED module **630** of this embodiment are connected in the form of a mesh.

[0235] Compared to the embodiments of FIGS. **29**A-G, the LED lighting module **530** in the above embodiments includes the LED module **630**, but doesn't include a driving circuit for the LED module **630**.

[0236] Also, the LED module **630** in this embodiment may produce a current detection signal S**531** reflecting the magnitude of current through the LED module **630** and being used for controlling or detecting the LED module **630**.

[0237] Besides, in fact, the number of LEDs **731** included by an LED unit **732** in some embodiments is in the range of 15-25, and may be in some embodiments in the range of 18-22.

[0238] FIG. **28**C is a plan view of a circuit layout of the LED module according to an embodiment of the present invention. Referring to FIG. **28**C, in this embodiment, multiple LEDs **831** are connected in the same way as described in FIG. **28**B, and three LED units are assumed in the LED module **630** and described as follows for illustration. A positive conductive line **834** and a negative conductive line **835** are to receive a driving signal for supplying power to the LEDs **831**. For example, the positive conductive line **834** may be coupled to the filtering output terminal **521** of the filtering circuit **520** described above, and the negative conductive line **835** coupled to the filtering output terminal **522** of the filtering circuit **520** to receive a filtered signal. For the convenience of illustration, all three of the n-th LEDs **831** in the three related LED units thereof are grouped as an LED set **833** in FIG. **28**C.

[0239] The positive conductive line **834** connects the three first LEDs **831** of the leftmost three related LED units thereof, that is, connects the anodes on the left sides of the three first LEDs **831** as shown in the leftmost LED set **833** of FIG. **28**C. The negative conductive line **835** connects the three last LEDs **831** of the rightmost three corresponding LED units thereof, that is, connects the cathodes on the right sides of the three last LEDs **831** as shown in the rightmost LED set **833** of FIG. **28**C. The cathodes of the three first LEDs **831**, the anodes of the three last LEDs **831**, and the anodes and cathodes of all the remaining LEDs **831** are connected by conductive lines or parts **839**.

[0240] For example, the anodes of the three LEDs **831** in the leftmost LED set **833** may be connected together by the positive conductive line **834**, and their cathodes may be connected together by a leftmost conductive part **839**. The anodes of the three LEDs **831** in the second leftmost LED set **833** are also connected together by the leftmost conductive part **839**, whereas their cathodes are connected together by a second leftmost conductive part **839**. Since the cathodes of the three LEDs **831** in the leftmost LED set **833** and the anodes of the three LEDs **831** in the second leftmost LED set **833** are connected together by the same leftmost conductive part **839**, the cathode of the first LED **831** in each of the three LED units is connected to the anode of the next or second LED **831**. As for the remaining LEDs **831** are also connected in the same way. Accordingly, all the LEDs **831** of the three LED units are connected to form the mesh as shown in FIG. **28**B.

[0241] It's worth noting that, in this embodiment, the length **836** of a portion of each conductive part **839** that connects to the anode of an LED **831** is smaller than the length **837** of another portion of each conductive part **839** that connects to the cathode of an LED **831**. This makes the area of the latter portion connecting to the cathode larger than that of the former portion connecting to the anode. Moreover, the length **837** may be smaller than a length **838** of a portion of each conductive part **839** that connects the cathode of an LED **831** and the anode of the next LED **831** in two adjacent LED sets **833**. This makes the area of the portion of each conductive part **839** that connects a cathode and an anode larger than the area of any other portion of each conductive part **839** that connects to only a cathode or an anode of an LED **831**. Due to the length differences and area differences, this layout structure improves heat dissipation of the LEDs **831**.

[0242] In some embodiments, the positive conductive line **834** includes a lengthwise portion **834***a*, and the negative conductive line **835** includes a lengthwise portion **835***a*, which are conducive to make the LED module have a positive "+" connective portion and a negative "−" connective portion at each of the two ends of the LED module, as shown in FIG. **28**C. Such a layout structure allows for coupling any of other circuits of the power supply module of the LED lamp, including e.g. the filtering circuit **520** and the rectifying circuits **510** and **540**, to the LED module through the positive connective portion and/or the negative connective portion at each or both ends of the LED lamp. Thus the layout structure increases the flexibility in arranging actual circuits in the LED lamp.

[0243] FIG. **28**D is a plan view of a circuit layout of the LED module according to another embodiment of the present invention. Referring to FIG. **28**D, in this embodiment, multiple LEDs **931** are connected in the same way as described in FIG. **28**A, and three LED units each including 7 LEDs **931** are assumed in the LED module **630** and described as follows for illustration. A positive conductive line **934** and a negative conductive line **935** are to receive a driving signal for supplying power to the LEDs **931**. For example, the positive conductive line **934** may be coupled to the filtering output terminal **521** of the filtering circuit **520** described above, and the negative conductive line **935** is coupled to the filtering output terminal **522** of the filtering circuit **520**, so as to receive a filtered signal. For the convenience of illustration, all seven LEDs **931** of each of the three LED units are grouped as an LED set **932** in FIG. **28**D. Thus there are three LED sets **932** corresponding to the three LED units.

[0244] The positive conductive line **934** connects the anode on the left side of the first or leftmost LED **931** of each of the three LED sets **932**. The negative conductive line **935** connects the cathode on the right side of the last or rightmost LED **931** of each of the three LED sets **932**. In each LED set **932** of each two adjacent LEDs **931**, the LED **931** on the left has a cathode connected by a conductive part **939** to an anode of the LED **931** on the right. By such a layout, the LEDs **931** of each LED set **932** are connected in series.

[0245] It's also worth noting that the conductive part **939** may be used to connect an anode and a cathode of two consecutive LEDs **931** respectively. The negative conductive line **935** connects the cathode of the last or rightmost LED **931** of each of the three LED sets **932**. And the positive conductive line **934** connects the anode of the first or leftmost LED **931** of each of the three LED sets **932**. Therefore, as shown in FIG. **28**D, the length of the conductive part **939** is larger than that of the portion of negative conductive line **935** connecting to a

cathode, which length is then larger than that of the portion of positive conductive line **934** connecting to an anode. For example, the length **938** of the conductive part **939** may be larger than the length **937** of the portion of negative conductive line **935** connecting a cathode of an LED **931**, which length **937** is then larger than the length **936** of the portion of the positive conductive line **934** connecting an anode of an LED **931**. Such a layout structure improves heat dissipation of the LEDs **931** in LED module **630**.

[0246] The positive conductive line **934** may include a lengthwise portion **934***a*, and the negative conductive line **935** may include a lengthwise portion **935***a*, which are conducive to make the LED module have a positive "+" connective portion and a negative "−" connective portion at each of the two ends of the LED module, as shown in FIG. **28**D. Such a layout structure allows for coupling any of other circuits of the power supply module of the LED lamp, including e.g. the filtering circuit **520** and the rectifying circuits **510** and **540**, to the LED module through the positive connective portion **934***a* and/or the negative connective portion **935***a* at each or both ends of the LED lamp. Thus the layout structure increases the flexibility in arranging actual circuits in the LED lamp.

[0247] Further, the circuit layouts as shown in FIGS. **28**C and **28**D may be implemented with a bendable circuit sheet or substrate, which may even be called flexible circuit board depending on its specific definition used. For example, the bendable circuit sheet may comprise one conductive layer where the positive conductive line **834**, the positive lengthwise portion **834***a*, the negative conductive line **835**, the negative lengthwise portion **835***a*, and the conductive parts **839** shown in FIG. **28**C, and the positive conductive line **934**, the positive lengthwise portion **934***a*, the negative conductive line **935**, the negative lengthwise portion **935***a*, and the conductive parts **939** shown in FIG. **28**D are formed by the method of etching.

[0248] FIG. **28**E is a plan view of a circuit layout of the LED module according to another embodiment of the present invention. The layout structures of the LED module in FIGS. **28**E and **28**C correspond to the same way of connecting the LEDs **831** as those shown in FIG. **28**B, but the layout structure in FIG. **28**E comprises two conductive layers instead of only one conductive layer for forming the circuit layout as shown in FIG. **28**C. Referring to FIG. **28**E, the main difference from the layout in FIG. **28**C is that the positive conductive line **834** and the negative conductive line **835** have a lengthwise portion **834***a* and a lengthwise portion **835***a*, respectively, that are formed in a second conductive layer instead. The difference is elaborated as follows.

[0249] Referring to FIGS. **28**E and **23**, the bendable circuit sheet of the LED module comprises a first conductive layer **2***a* and a second conductive layer **2***c* electrically insulated from each other by a dielectric layer **2***b* (not shown). Of the two conductive layers, the positive conductive line **834**, the negative conductive line **835**, and the conductive parts **839** in FIG. **28**E are formed in first conductive layer **2***a* by the method of etching for electrically connecting the plurality of LED components **831** e.g. in a form of a mesh, whereas the positive lengthwise portion **834***a* and the negative lengthwise portion **835***a* are formed in second conductive layer **2***c* by etching for electrically connecting (the filtering output terminal of) the filtering circuit. Further, the positive conductive line **834** and the negative conductive line **835** in the first conductive layer **2***a* have via points **834***b* and via points **835***b*, respectively, for connecting to second conductive layer **2***c*. And the positive lengthwise portion **834***a* and the negative lengthwise portion **835***a* in second conductive layer **2***c* have via points **834***c* and via points **835***c*, respectively. The via points **834***b* are positioned corresponding to the via points **834***c*, for connecting the positive conductive line **834** and the positive lengthwise portion **834***a*. The via points **835***b* are positioned corresponding to the via points **835***c*, for connecting the negative conductive line **835** and the negative lengthwise portion **835***a*. An exemplary desirable way of connecting the two conductive layers is to form a hole connecting each via point **834***b* and a corresponding via point **834***c*, and to form a hole connecting each via point **835***b* and a corresponding via point **835***c*, with the holes extending through the two conductive layers and the dielectric layer in-between. And the positive conductive line **834** and the positive lengthwise portion **834***a* can be electrically connected by welding metallic part(s) through the connecting hole(s), and the negative conductive line **835** and the negative lengthwise portion **835***a* can be electrically connected by welding metallic part(s) through the connecting hole(s).

[0250] Similarly, the layout structure of the LED module in FIG. **28**D may alternatively have the positive lengthwise portion **934***a* and the negative lengthwise portion **935***a* disposed in a second conductive layer to constitute a two-layered layout structure.

[0251] It's worth noting that the thickness of the second conductive layer of a two-layered bendable circuit sheet is, in some embodiments, larger than that of the first conductive layer in order to reduce the voltage drop or loss along each of the positive lengthwise portion and the negative lengthwise portion disposed in the second conductive layer. Compared to a one-layered bendable circuit sheet, since a positive lengthwise portion and a negative lengthwise portion are disposed in a second conductive layer in a two-layer bendable circuit sheet, the width (between two lengthwise sides) of the two-layered bendable circuit sheet is or can be reduced. On the same fixture or plate in a production process, the number of bendable circuit sheets each with a shorter width that can be laid together at most is larger than the number of bendable circuit sheets each with a longer width that can be laid together at most. Thus adopting a bendable circuit sheet with a shorter width can increase the efficiency of production of the LED module. And reliability in the production process, such as the accuracy of welding position when welding (materials on) the LED components, can also be improved, because a two-layer bendable circuit sheet can better maintain its shape.

[0252] As a variant of the above embodiments, a type of LED tube lamp is provided that has at least some of the electronic components of its power supply module disposed on a light strip of the LED tube lamp. For example, the technique of printed electronic circuit (PEC) can be used to print, insert, or embed at least some of the electronic components onto the light strip.

[0253] In one embodiment, all electronic components of the power supply module are disposed on the light strip. The production process may include or proceed with the following steps: preparation of the circuit substrate (e.g. preparation of a flexible printed circuit board); ink jet printing of metallic nano-ink; ink jet printing of active and passive components (as of the power supply module); drying/sintering; ink jet printing of interlayer bumps; spraying of insulating ink; ink jet printing of metallic nano-ink; ink jet printing of active and passive components (to sequentially form the included lay-

ers); spraying of surface bond pad(s); and spraying of solder resist against LED components.

[0254] In certain embodiments, if all electronic components of the power supply module are disposed on the LED light strip, electrical connection between the terminal pins of the LED tube lamp and the light strip may be achieved by connecting the pins to conductive lines which are welded with ends of the light strip. In this case, another substrate for supporting the power supply module is not required, thereby allowing of an improved design or arrangement in the end cap(s) of the LED tube lamp. In some embodiments, (components of) the power supply module are disposed at two ends of the light strip, in order to significantly reduce the impact of heat generated from the power supply module's operations on the LED components. Since no substrate other than the light strip is used to support the power supply module in this case, the total amount of welding or soldering can be significantly reduced, improving the general reliability of the power supply module.

[0255] Another case is that some of all electronic components of the power supply module, such as some resistors and/or smaller size capacitors, are printed onto the light strip, and some bigger size components, such as some inductors and/or electrolytic capacitors, are disposed in the end cap(s). The production process of the light strip in this case may be the same as that described above. And in this case disposing some of all electronic components on the light strip is conducive to achieving a reasonable layout of the power supply module in the LED tube lamp, which may allow of an improved design in the end cap(s).

[0256] As a variant embodiment of the above, electronic components of the power supply module may be disposed on the LED light strip by a method of embedding or inserting, e.g. by embedding the components onto a bendable or flexible light strip. In some embodiments, this embedding may be realized by a method using copper-clad laminates (CCL) for forming a resistor or capacitor; a method using ink related to silkscreen printing; or a method of ink jet printing to embed passive components, wherein an ink jet printer is used to directly print inks to constitute passive components and related functionalities to intended positions on the light strip. Then through treatment by ultraviolet (UV) light or drying/sintering, the light strip is formed where passive components are embedded. The electronic components embedded onto the light strip include for example resistors, capacitors, and inductors. In other embodiments, active components also may be embedded. Through embedding some components onto the light strip, a reasonable layout of the power supply module can be achieved to allow of an improved design in the end cap(s), because the surface area on a printed circuit board used for carrying components of the power supply module is reduced or smaller, and as a result the size, weight, and thickness of the resulting printed circuit board for carrying components of the power supply module is also smaller or reduced. Also in this situation since welding points on the printed circuit board for welding resistors and/or capacitors if they were not to be disposed on the light strip are no longer used, the reliability of the power supply module is improved, in view of the fact that these welding points are most liable to (cause or incur) faults, malfunctions, or failures. Further, the length of conductive lines needed for connecting components on the printed circuit board is therefore also reduced, which allows of a more compact layout of components on the printed circuit board and thus improving the functionalities of these components.

[0257] Next, methods to produce embedded capacitors and resistors are explained as follows.

[0258] Usually, methods for manufacturing embedded capacitors employ or involve a concept called distributed or planar capacitance. The manufacturing process may include the following step(s). On a substrate of a copper layer a very thin insulation layer is applied or pressed, which is then generally disposed between a pair of layers including a power conductive layer and a ground layer. The very thin insulation layer makes the distance between the power conductive layer and the ground layer very short. A capacitance resulting from this structure can also be realized by a conventional technique of a plated-through hole. Basically, this step is used to create this structure comprising a big parallel-plate capacitor on a circuit substrate.

[0259] Of products of high electrical capacity, certain types of products employ distributed capacitances, and other types of products employ separate embedded capacitances. Through putting or adding a high dielectric-constant material, such as barium titanate, into the insulation layer, the high electrical capacity is achieved.

[0260] A usual method for manufacturing embedded resistors employ conductive or resistive adhesive. This may include, for example, a resin to which conductive carbon or graphite is added, which may be used as an additive or filler. The additive resin is silkscreen printed to an object location, and is then after treatment laminated inside the circuit board. The resulting resistor is connected to other electronic components through plated-through holes or microvias. Another method is called Ohmega-Ply, by which a two metallic layer structure of a copper layer and a thin nickel alloy layer constitutes a layer resistor relative to a substrate. Then through etching the copper layer and nickel alloy layer, different types of nickel alloy resistors with copper terminals can be formed. These types of resistor are each laminated inside the circuit board.

[0261] In an embodiment, conductive wires/lines are directly printed in a linear layout on an inner surface of the LED glass lamp tube, with LED components directly attached on the inner surface and electrically connected by the conductive wires. In some embodiments, the LED components in the form of chips are directly attached over the conductive wires on the inner surface, and connective points are at terminals of the wires for connecting the LED components and the power supply module. After being attached, the LED chips may have fluorescent powder applied or dropped thereon, for producing white light or light of other color by the operating LED tube lamp.

[0262] In some embodiments, luminous efficacy of the LED or LED component is 80 lm/W or above, and in some embodiments, it may be 120 lm/W or above. Certain more optimal embodiments may include a luminous efficacy of the LED or LED component of 160 lm/W or above. White light emitted by an LED component in the invention may be produced by mixing fluorescent powder with the monochromatic light emitted by a monochromatic LED chip. The white light in its spectrum has major wavelength ranges of 430-460 nm and 550-560 nm, or major wavelength ranges of 430-460 nm, 540-560 nm, and 620-640 nm.

[0263] FIG. **29**A is a block diagram of a power supply module in an LED lamp according to an embodiment of the

present invention. As shown in FIG. **29**A, the power supply module of the LED lamp includes two rectifying circuits **510** and **540**, a filtering circuit **520**, and a driving circuit **1530**. In this embodiment, a driving circuit **1530** and an LED module **630** compose the LED lighting module **530**. The driving circuit **1530** comprises a DC-to-DC converter circuit, and is coupled to the filtering output terminals **521** and **522** to receive a filtered signal and then perform power conversion for converting the filtered signal into a driving signal at the driving output terminals **1521** and **1522**. The LED module **630** is coupled to the driving output terminals **1521** and **1522** to receive the driving signal for emitting light. In some embodiments, the current of LED module **630** is stabilized at an objective current value. Descriptions of this LED module **630** are the same as those provided above with reference to FIGS. **28**A-D.

[0264] FIG. **29**B is a block diagram of the driving circuit according to an embodiment of the present invention. Referring to FIG. **29**B, a driving circuit includes a controller **1531**, and a conversion circuit **1532** for power conversion based on a current source, for driving the LED module to emit light. The conversion circuit **1532** includes a switching circuit **1535** and an energy storage circuit **1538**. And the conversion circuit **1532** is coupled to the filtering output terminals **521** and **522** to receive and then convert a filtered signal, under the control by the controller **1531**, into a driving signal at the driving output terminals **1521** and **1522** for driving the LED module. Under the control by the controller **1531**, the driving signal output by the conversion circuit **1532** comprises a steady current, making the LED module emitting steady light.

[0265] FIG. **29**C is a schematic diagram of the driving circuit according to an embodiment of the present invention. Referring to FIG. **29**C, a driving circuit **1630** in this embodiment comprises a buck DC-to-DC converter circuit having a controller **1631** and a converter circuit. The converter circuit includes an inductor **1632**, a diode **1633** for "freewheeling" of current, a capacitor **1634**, and a switch **1635**. The driving circuit **1630** is coupled to the filtering output terminals **521** and **522** to receive and then convert a filtered signal into a driving signal for driving an LED module connected between the driving output terminals **1521** and **1522**.

[0266] In this embodiment, the switch **1635** comprises a metal-oxide-semiconductor field-effect transistor (MOSFET) and has a first terminal coupled to the anode of freewheeling diode **1633**, a second terminal coupled to the filtering output terminal **522**, and a control terminal coupled to the controller **1631** used for controlling current conduction or cutoff between the first and second terminals of switch **1635**. The driving output terminal **1521** is connected to the filtering output terminal **521**, and the driving output terminal **1522** is connected to an end of the inductor **1632**, which has another end connected to the first terminal of switch **1635**. The capacitor **1634** is coupled between the driving output terminals **1521** and **1522** to stabilize the voltage between the driving output terminals **1521** and **1522**. The freewheeling diode **1633** has a cathode connected to the driving output terminal **1521**.

[0267] Next, a description follows as to an exemplary operation of the driving circuit **1630**.

[0268] The controller **1631** is configured for determining when to turn the switch **1635** on (in a conducting state) or off (in a cutoff state) according to a current detection signal S**535** and/or a current detection signal S**531**. For example, in some embodiments, the controller **1631** is configured to control the duty cycle of switch **1635** being on and switch **1635** being off in order to adjust the size or magnitude of the driving signal. The current detection signal S**535** represents the magnitude of current through the switch **1635**. The current detection signal S**531** represents the magnitude of current through the LED module coupled between the driving output terminals **1521** and **1522**. According to any of current detection signal S**535** and current detection signal S**531**, the controller **1631** can obtain information on the magnitude of power converted by the converter circuit. When the switch **1635** is switched on, a current of a filtered signal is input through the filtering output terminal **521**, and then flows through the capacitor **1634**, the driving output terminal **1521**, the LED module, the inductor **1632**, and the switch **1635**, and then flows out from the filtering output terminal **522**. During this flowing of current, the capacitor **1634** and the inductor **1632** are performing storing of energy. On the other hand, when the switch **1635** is switched off, the capacitor **1634** and the inductor **1632** perform releasing of stored energy by a current flowing from the freewheeling diode **1633** to the driving output terminal **1521** to make the LED module continuing to emit light.

[0269] It's worth noting that the capacitor **1634** is an optional element, so it can be omitted and is thus depicted in a dotted line in FIG. **29**C. In some application environments, the natural characteristic of an inductor to oppose instantaneous change in electric current passing through the inductor may be used to achieve the effect of stabilizing the current through the LED module, thus omitting the capacitor **1634**.

[0270] FIG. **29**D is a schematic diagram of the driving circuit according to an embodiment of the present invention. Referring to FIG. **29**D, a driving circuit **1730** in this embodiment comprises a boost DC-to-DC converter circuit having a controller **1731** and a converter circuit. The converter circuit includes an inductor **1732**, a diode **1733** for "freewheeling" of current, a capacitor **1734**, and a switch **1735**. The driving circuit **1730** is configured to receive and then convert a filtered signal from the filtering output terminals **521** and **522** into a driving signal for driving an LED module coupled between the driving output terminals **1521** and **1522**.

[0271] The inductor **1732** has an end connected to the filtering output terminal **521**, and another end connected to the anode of freewheeling diode **1733** and a first terminal of the switch **1735**, which has a second terminal connected to the filtering output terminal **522** and the driving output terminal **1522**. The freewheeling diode **1733** has a cathode connected to the driving output terminal **1521**. And the capacitor **1734** is coupled between the driving output terminals **1521** and **1522**.

[0272] The controller **1731** is coupled to a control terminal of switch **1735**, and is configured for determining when to turn the switch **1735** on (in a conducting state) or off (in a cutoff state), according to a current detection signal S**535** and/or a current detection signal S**531**. When the switch **1735** is switched on, a current of a filtered signal is input through the filtering output terminal **521**, and then flows through the inductor **1732** and the switch **1735**, and then flows out from the filtering output terminal **522**. During this flowing of current, the current through the inductor **1732** increases with time, with the inductor **1732** being in a state of storing energy, while the capacitor **1734** enters a state of releasing energy, making the LED module continuing to emit light. On the other hand, when the switch **1735** is switched off, the inductor **1732** enters a state of releasing energy as the current through the inductor **1732** decreases with time. In this state, the current through the inductor **1732** then flows through the free-

wheeling diode **1733**, the capacitor **1734**, and the LED module, while the capacitor **1734** enters a state of storing energy.

[0273] It's worth noting that the capacitor **1734** is an optional element, so it can be omitted and is thus depicted in a dotted line in FIG. **29**D. When the capacitor **1734** is omitted and the switch **1735** is switched on, the current of inductor **1732** does not flow through the LED module, making the LED module not emit light; but when the switch **1735** is switched off, the current of inductor **1732** flows through the freewheeling diode **1733** to reach the LED module, making the LED module emit light. Therefore, by controlling the time that the LED module emits light, and the magnitude of current through the LED module, the average luminance of the LED module can be stabilized to be above a defined value, thus also achieving the effect of emitting a steady light.

[0274] FIG. **29**E is a schematic diagram of the driving circuit according to an embodiment of the present invention. Referring to FIG. **29**E, a driving circuit **1830** in this embodiment comprises a buck DC-to-DC converter circuit having a controller **1831** and a converter circuit. The converter circuit includes an inductor **1832**, a diode **1833** for "freewheeling" of current, a capacitor **1834**, and a switch **1835**. The driving circuit **1830** is coupled to the filtering output terminals **521** and **522** to receive and then convert a filtered signal into a driving signal for driving an LED module connected between the driving output terminals **1521** and **1522**.

[0275] The switch **1835** has a first terminal coupled to the filtering output terminal **521**, a second terminal coupled to the cathode of freewheeling diode **1833**, and a control terminal coupled to the controller **1831** to receive a control signal from the controller **1831** for controlling current conduction or cutoff between the first and second terminals of the switch **1835**. The anode of freewheeling diode **1833** is connected to the filtering output terminal **522** and the driving output terminal **1522**. The inductor **1832** has an end connected to the second terminal of switch **1835**, and another end connected to the driving output terminal **1521**. The capacitor **1834** is coupled between the driving output terminals **1521** and **1522** to stabilize the voltage between the driving output terminals **1521** and **1522**.

[0276] The controller **1831** is configured for controlling when to turn the switch **1835** on (in a conducting state) or off (in a cutoff state) according to a current detection signal S**535** and/or a current detection signal S**531**. When the switch **1835** is switched on, a current of a filtered signal is input through the filtering output terminal **521**, and then flows through the switch **1835**, the inductor **1832**, and the driving output terminals **1521** and **1522**, and then flows out from the filtering output terminal **522**. During this flowing of current, the current through the inductor **1832** and the voltage of the capacitor **1834** both increase with time, so the inductor **1832** and the capacitor **1834** are in a state of storing energy. On the other hand, when the switch **1835** is switched off, the inductor **1832** is in a state of releasing energy and thus the current through it decreases with time. In this case, the current through the inductor **1832** circulates through the driving output terminals **1521** and **1522**, the freewheeling diode **1833**, and back to the inductor **1832**.

[0277] It's worth noting that the capacitor **1834** is an optional element, so it can be omitted and is thus depicted in a dotted line in FIG. **29**E. When the capacitor **1834** is omitted, no matter whether the switch **1835** is turned on or off, the current through the inductor **1832** will flow through the driving output terminals **1521** and **1522** to drive the LED module to continue emitting light.

[0278] FIG. **29**F is a schematic diagram of the driving circuit according to an embodiment of the present invention. Referring to FIG. **29**F, a driving circuit **1930** in this embodiment comprises a buck DC-to-DC converter circuit having a controller **1931** and a converter circuit. The converter circuit includes an inductor **1932**, a diode **1933** for "freewheeling" of current, a capacitor **1934**, and a switch **1935**. The driving circuit **1930** is coupled to the filtering output terminals **521** and **522** to receive and then convert a filtered signal into a driving signal for driving an LED module connected between the driving output terminals **1521** and **1522**.

[0279] The inductor **1932** has an end connected to the filtering output terminal **521** and the driving output terminal **1522**, and another end connected to a first end of the switch **1935**. The switch **1935** has a second end connected to the filtering output terminal **522**, and a control terminal connected to controller **1931** to receive a control signal from controller **1931** for controlling current conduction or cutoff of the switch **1935**. The freewheeling diode **1933** has an anode coupled to a node connecting the inductor **1932** and the switch **1935**, and a cathode coupled to the driving output terminal **1521**. The capacitor **1934** is coupled to the driving output terminals **1521** and **1522** to stabilize the driving of the LED module coupled between the driving output terminals **1521** and **1522**.

[0280] The controller **1931** is configured for controlling when to turn the switch **1935** on (in a conducting state) or off (in a cutoff state) according to a current detection signal S**531** and/or a current detection signal S**535**. When the switch **1935** is turned on, a current is input through the filtering output terminal **521**, and then flows through the inductor **1932** and the switch **1935**, and then flows out from the filtering output terminal **522**. During this flowing of current, the current through the inductor **1932** increases with time, so the inductor **1932** is in a state of storing energy; but the voltage of the capacitor **1934** decreases with time, so the capacitor **1934** is in a state of releasing energy to keep the LED module continuing to emit light. On the other hand, when the switch **1935** is turned off, the inductor **1932** is in a state of releasing energy and its current decreases with time. In this case, the current through the inductor **1932** circulates through the freewheeling diode **1933**, the driving output terminals **1521** and **1522**, and back to the inductor **1932**. During this circulation, the capacitor **1934** is in a state of storing energy and its voltage increases with time.

[0281] It's worth noting that the capacitor **1934** is an optional element, so it can be omitted and is thus depicted in a dotted line in FIG. **29**F. When the capacitor **1934** is omitted and the switch **1935** is turned on, the current through the inductor **1932** doesn't flow through the driving output terminals **1521** and **1522**, thereby making the LED module not emit light. On the other hand, when the switch **1935** is turned off, the current through the inductor **1932** flows through the freewheeling diode **1933** and then the LED module to make the LED module emit light. Therefore, by controlling the time that the LED module emits light, and the magnitude of current through the LED module, the average luminance of the LED module can be stabilized to be above a defined value, thus also achieving the effect of emitting a steady light.

[0282] FIG. **29**G is a block diagram of the driving circuit according to an embodiment of the present invention. Refer-

ring to FIG. **29**G, the driving circuit includes a controller **2631**, and a conversion circuit **2632** for power conversion based on an adjustable current source, for driving the LED module to emit light. The conversion circuit **2632** includes a switching circuit **2635** and an energy storage circuit **2638**. And the conversion circuit **2632** is coupled to the filtering output terminals **521** and **522** to receive and then convert a filtered signal, under the control by the controller **2631**, into a driving signal at the driving output terminals **1521** and **1522** for driving the LED module. The controller **2631** is configured to receive a current detection signal S**535** and/or a current detection signal S**539** for controlling or stabilizing the driving signal output by the conversion circuit **2632** to be above an objective current value. The current detection signal S**535** represents the magnitude of current through the switching circuit **2635**. The current detection signal S**539** represents the magnitude of current through energy storage circuit **2638**, which current may be e.g. an inductor current in energy storage circuit **2638** or a current output at the driving output terminal **1521**. Any of current detection signal S**535** and current detection signal S**539** can represent the magnitude of current Iout provided by the driving circuit from the driving output terminals **1521** and **1522** to the LED module. The controller **2631** is coupled to the filtering output terminal **521** for setting the objective current value according to the voltage Vin at the filtering output terminal **521**. Therefore, the current Iout provided by the driving circuit or the objective current value can be adjusted corresponding to the magnitude of the voltage Vin of a filtered signal output by a filtering circuit.

[0283] It's worth noting that current detection signals S**535** and S**539** can be generated by measuring current through a resistor or induced by an inductor. For example, a current can be measured according to a voltage drop across a resistor in the conversion circuit **2632** the current flows through, or which arises from a mutual induction between an inductor in the conversion circuit **2632** and another inductor in its energy storage circuit **2638**.

[0284] The above driving circuit structures are especially suitable for an application environment in which the external driving circuit for the LED tube lamp includes electronic ballast. An electronic ballast is equivalent to a current source whose output power is not constant. In an internal driving circuit as shown in each of FIGS. **29**C-F, power consumed by the internal driving circuit relates to or depends on the number of LEDs in the LED module, and could be regarded as constant. When the output power of the electronic ballast is higher than power consumed by the LED module driven by the driving circuit, the output voltage of the ballast will increase continually, causing the logic level of an AC driving signal received by the power supply module of the LED lamp to continually increase, so as to risk damaging the ballast and/or components of the power supply module due to their voltage ratings being exceeded. On the other hand, when the output power of the electronic ballast is lower than power consumed by the LED module driven by the driving circuit, the output voltage of the ballast and the logic level of the AC driving signal will decrease continually so that the LED tube lamp fail to normally operate.

[0285] It's worth noting that the power needed for an LED lamp to work is already lower than that needed for a fluorescent lamp to work. If a conventional control mechanism of e.g. using a backlight module to control the LED luminance is used with a conventional driving system of e.g. a ballast, a problem will probably arise of mismatch or incompatibility between the output power of the external driving system and the power needed by the LED lamp. This problem may even cause damaging of the driving system and/or the LED lamp. To prevent or reduce this problem, using e.g. the power/current adjustment method described above in FIG. **29**G enables the LED (tube) lamp to be better compatible with traditional fluorescent lighting system.

[0286] FIG. **29**H is a graph illustrating the relationship between the voltage Vin and the objective current value Iout according to an embodiment of the present invention. In FIG. **29**H, the variable Vin is on the horizontal axis, and the variable Iout is on the vertical axis. In some cases, when the logic level of the voltage Vin of a filtered signal is between the upper voltage limit VH and the lower voltage limit VL, the objective current value Iout will be about an initial objective current value. The upper voltage limit VH is higher than the lower voltage limit VL. When the voltage Vin increases to be higher than the upper voltage limit VH, the objective current value Iout will increase with the increasing of the voltage Vin. During this stage, a situation that may be preferable is that the slope of the relationship curve increase with the increasing of the voltage Vin. When the voltage Vin of a filtered signal decreases to be below the lower voltage limit VL, the objective current value Iout will decrease with the decreasing of the voltage Vin. During this stage, a situation that may be preferable is that the slope of the relationship curve decrease with the decreasing of the voltage Vin. For example, during the stage when the voltage Vin is higher than the upper voltage limit VH or lower than the lower voltage limit VL, the objective current value Iout is in some embodiments a function of the voltage Vin to the power of 2 or above, in order to make the rate of increase/decrease of the consumed power higher than the rate of increase/decrease of the output power of the external driving system. Thus, adjustment of the objective current value Iout is in some embodiments a function of the filtered voltage Vin to the power of 2 or above.

[0287] In another case, when the voltage Vin of a filtered signal is between the upper voltage limit VH and the lower voltage limit VL, the objective current value Iout of the LED lamp will vary, increase or decrease, linearly with the voltage Vin. During this stage, when the voltage Vin is at the upper voltage limit VH, the objective current value Iout will be at the upper current limit IH. When the voltage Vin is at the lower voltage limit VL, the objective current value Iout will be at the lower current limit IL. The upper current limit IH is larger than the lower current limit IL. And when the voltage Vin is between the upper voltage limit VH and the lower voltage limit VL, the objective current value Iout will be a function of the voltage Vin to the power of 1.

[0288] With the designed relationship in FIG. **29**H, when the output power of the ballast is higher than the power consumed by the LED module driven by the driving circuit, the voltage Vin will increase with time to exceed the upper voltage limit VH. When the voltage Vin is higher than the upper voltage limit VH, the rate of increase of the consumed power of the LED module is higher than that of the output power of the electronic ballast, and the output power and the consumed power will be balanced or equal when the voltage Vin is at a high balance voltage value VH+ and the current Iout is at a high balance current value IH+. In this case, the high balance voltage value VH+ is larger than the upper voltage limit VH, and the high balance current value IH+ is larger than the upper current limit IH. On the other hand, when the output power of the ballast is lower than the power

consumed by the LED module driven by the driving circuit, the voltage Vin will be below the lower voltage limit VL. When the voltage Vin is lower than the lower voltage limit VL, the rate of decrease of the consumed power of the LED module is higher than that of the output power of the electronic ballast, and the output power and the consumed power will be balanced or equal when the voltage Vin is at a low balance voltage value VL- and the objective current value Iout is at a low balance current value IL-. In this case, the low balance voltage value VL− is smaller than the lower voltage limit VL, and the low balance current value IL− is smaller than the lower current limit IL.

[0289] In some embodiments, the lower voltage limit VL is defined to be around 90% of the lowest output power of the electronic ballast, and the upper voltage limit VH is defined to be around 110% of its highest output power. Taking a common AC powerline with a voltage range of 100-277 volts and a frequency of 60 Hz as an example, the lower voltage limit VL may be set at 90 volts (=100*90%), and the upper voltage limit VH may be set at 305 volts (=277*110%).

[0290] With reference to FIGS. **19** and **20**, a short circuit board **253** includes a first short circuit substrate and a second short circuit substrate respectively connected to two terminal portions of a long circuit sheet **251**, and electronic components of the power supply module are respectively disposed on the first short circuit substrate and the second short circuit substrate. The first short circuit substrate and the second short circuit substrate may have roughly the same length, or different lengths. In general, the first short circuit substrate (i.e. the right circuit substrate of short circuit board **253** in FIG. **19** and the left circuit substrate of short circuit board **253** in FIG. **20**) has a length that is about 30%-80% of the length of the second short circuit substrate (i.e. the left circuit substrate of short circuit board **253** in FIG. **19** and the right circuit substrate of short circuit board **253** in FIG. **20**). In some embodiments the length of the first short circuit substrate is about ⅓ ~⅔ of the length of the second short circuit substrate. For example, in one embodiment, the length of the first short circuit substrate may be about half the length of the second short circuit substrate. The length of the second short circuit substrate may be, for example in the range of about 15 mm to about 65 mm, depending on actual application occasions. In certain embodiments, the first short circuit substrate is disposed in an end cap at an end of the LED tube lamp, and the second short circuit substrate is disposed in another end cap at the opposite end of the LED tube lamp.

[0291] For example, capacitors of the driving circuit, such as the capacitors **1634**, **1734**, **1834**, and **1934** in FIGS. **29**C-**29**F, in practical use may include two or more capacitors connected in parallel. Some or all capacitors of the driving circuit in the power supply module may be arranged on the first short circuit substrate of short circuit board **253**, while other components such as the rectifying circuit, filtering circuit, inductor(s) of the driving circuit, controller(s), switch (es), diodes, etc. are arranged on the second short circuit substrate of short circuit board **253**. Since the inductors, controllers, switches, etc. are electronic components with higher temperature, arranging some or all capacitors on a circuit substrate separate or away from the circuit substrate(s) of high-temperature components helps prevent the working life of capacitors (especially electrolytic capacitors) from being negatively affected by the high-temperature components, thus improving the reliability of the capacitors. Further, the physical separation between the capacitors and both the rectifying circuit and filtering circuit also contributes to reducing the problem of EMI.

[0292] In some embodiments, the driving circuit has power conversion efficiency of 80% or above, which may be 90% or above, and may even be 92% or above. Therefore, without the driving circuit, luminous efficacy of the LED lamp according to some embodiments may be 120 lm/W or above, and may even be 160 lm/W or above. On the other hand, with the driving circuit in combination with the LED component(s), luminous efficacy of the LED lamp in the invention may be, in some embodiments, 120 lm/W*90%=108 lm/W or above, and may even be, in some embodiments 160 lm/W*92%=147.2 lm/W or above.

[0293] In view of the fact that the diffusion film or layer in an LED tube lamp has light transmittance of 85% or above, luminous efficacy of the LED tube lamp of the invention is in some embodiments 108 lm/W*85%=91.8 lm/W or above, and may be, in some more effective embodiments, 147.2 lm/W*85%=125.12 lm/W.

[0294] FIG. **30**A is a block diagram of using a power supply module in an LED lamp according to an embodiment of the present invention. Compared to FIG. **24**B, the embodiment of FIG. **30**A includes two rectifying circuits **510** and **540**, a filtering circuit **520**, and a driving circuit **1530**, and further includes an anti-flickering circuit **550** coupled between the filtering circuit **520** and the LED lighting module **530**. In this embodiment, a driving circuit **1530** and an LED module **630** compose the LED lighting module **530**.

[0295] The anti-flickering circuit **550** is coupled to the filtering output terminals **521** and **522** to receive a filtered signal, and under specific circumstances to consume partial energy of the filtered signal so as to reduce (the incidence of) ripples of the filtered signal disrupting or interrupting the light emission of the LED lighting module **530**. In general, the filtering circuit **520** has such filtering components as capacitor(s) and/or inductor(s), and/or parasitic capacitors and inductors, which may form resonant circuits. Upon breakoff or stop of an AC power signal, as when the power supply of the LED lamp is turned off by a user, the amplitude(s) of resonant signals in the resonant circuits will decrease with time. But LEDs in the LED module of the LED lamp are unidirectional conduction devices and generally require a minimum conduction voltage for the LED module. When a resonant signal's trough value is lower than the minimum conduction voltage of the LED module, but its peak value is still higher than the minimum conduction voltage, the flickering phenomenon will occur in light emission of the LED module. In this case the anti-flickering circuit **550** works by allowing a current matching a defined flickering current value of the LED component to flow through, consuming partial energy of the filtered signal which should be higher than the energy difference of the resonant signal between its peak and trough values, so as to reduce the flickering phenomenon. In certain embodiments, a preferred occasion for the anti-flickering circuit **550** to work is when the filtered signal's voltage approaches (and is still higher than) the minimum conduction voltage, and thus the partial energy of the filtered signal consumed by the anti-flickering circuit **550** is higher than the energy difference of the resonant signal between its peak and trough values.

[0296] It's worth noting that the anti-flickering circuit **550** may be more suitable for the situation in which the LED lighting module **530** doesn't include the driving circuit **1530**,

for example, when the LED module **630** of LED lighting module **530** is (directly) driven to emit light by a filtered signal from a filtering circuit. In this case, the light emission of LED module **630** will directly reflect variation in the filtered signal due to its ripples. In this situation, the introduction of anti-flickering circuit **550** will prevent the flickering phenomenon from occurring in the LED lamp upon the breakoff of power supply to the LED lamp.

[0297] FIG. **30**B is a schematic diagram of the anti-flickering circuit according to an embodiment of the present invention. Referring to FIG. **30**B, an anti-flickering circuit **650** includes at least a resistor, such as two resistors connected in series between the filtering output terminals **521** and **522**. In this embodiment, the anti-flickering circuit **650** in use consumes partial energy of a filtered signal continually. When in normal operation of the LED lamp, this partial energy is far lower than the energy consumed by LED lighting module **530**. But upon a breakoff or stop of the power supply, when the voltage logic level of the filtered signal decreases to approach the minimum conduction voltage of LED module **630**, this partial energy is still consumed by the anti-flickering circuit **650** in order to offset the impact of the resonant signals which may cause the flickering of light emission of LED module **630**. In some embodiments, a current equal to or larger than an anti-flickering current logic level may be set to flow through the anti-flickering circuit **650** when the LED module **630** is supplied by the minimum conduction voltage, and then an equivalent anti-flickering resistance of anti-flickering circuit **650** can be determined based on the set current.

[0298] FIG. **31**A is a block diagram of using a power supply module in an LED lamp according to an embodiment of the present invention. Compared to FIG. **30**A, the embodiment of FIG. **31**A includes two rectifying circuits **510** and **540**, a filtering circuit **520**, a driving circuit **1530**, and an anti-flickering circuit **550**, and further includes a protection circuit **560**. In this embodiment, a driving circuit **1530** and an LED module **630** compose the LED lighting module **530**. The protection circuit **560** is coupled to the filtering output terminals **521** and **522** to detect the filtered signal from the filtering circuit **520** for determining whether to enter a protection state. Upon entering a protection state, the protection circuit **560** works to limit, restrain, or clamp down on the logic level of the filtered signal, preventing damaging of components in the LED lighting module **530**. And the anti-flickering circuit **550** may be omitted and are thus depicted in a dotted line in FIG. **31**A.

[0299] FIG. **31**B is a schematic diagram of the protection circuit according to an embodiment of the present invention. Referring to FIG. **31**B, a protection circuit **660** includes a voltage clamping circuit, a voltage division circuit, two capacitors **663** and **670**, a resistor **669**, and a diode **672**, for entering a protection state when a current and/or voltage of the LED module is/are or might be excessively high, thus preventing damaging of the LED module. The voltage clamping circuit includes a bidirectional triode thyristor (TRIAC) **661** and a DIAC or symmetrical trigger diode **662**. The voltage division circuit includes two bipolar junction transistors (BJT) **667** and **668** and multiple resistors **664**, **665**, **666**, and **671**.

[0300] The bidirectional triode thyristor **661** has a first terminal connected to the filtering output terminal **521**, a second terminal connected to the filtering output terminal **522**, and a control terminal connected to a first terminal of symmetrical trigger diode **662**, which has a second terminal connected to an end of the capacitor **663**, which has another end connected to the filtering output terminal **522**. The resistor **664** is in parallel to the capacitor **663**, and has an end connected to the second terminal of symmetrical trigger diode **662** and another end connected to the filtering output terminal **522**. The resistor **665** has an end connected to the second terminal of symmetrical trigger diode **662** and another end connected to the collector terminal of BJT **667**, whose emitter terminal is connected to the filtering output terminal **522**. The resistor **666** has an end connected to the second terminal of symmetrical trigger diode **662** and another end connected to the collector terminal of BJT **668** and the base terminal of BJT **667**. The emitter terminal of BJT **668** is connected to the filtering output terminal **522**. The resistor **669** has an end connected to the base terminal of BJT **668** and another end connected to an end of the capacitor **670**, which has another end connected to the filtering output terminal **522**. The resistor **671** has an end connected to the second terminal of symmetrical trigger diode **662** and another end connected to the cathode of diode **672**, whose anode is connected to the filtering output terminal **521**.

[0301] It's worth noting that according to some embodiments, the resistance of resistor **665** should be smaller than that of resistor **666**.

[0302] Next, an exemplary operation of the protection circuit **660** in overcurrent protection is described as follows.

[0303] The node connecting the resistor **669** and the capacitor **670** is to receive a current detection signal S**531**, which represents the magnitude of current through the LED module. The other end of the resistor **671** is a voltage terminal **521'**. In this embodiment concerning overcurrent protection, the voltage terminal **521'** may be coupled to a biasing voltage source, or be connected through the diode **672** to the filtering output terminal **521**, as shown in FIG. **31**B, to take a filtered signal as a biasing voltage source. If the voltage terminal **521'** is coupled to an external biasing voltage source, the diode **672** may be omitted, so it is depicted in a dotted line in FIG. **31**B. The combination of the resistor **669** and the capacitor **670** can work to filter out high frequency components of the current detection signal S**531**, and then input the filtered current detection signal S**531** to the base terminal of BJT **668** for controlling current conduction and cutoff of the BJT **668**. The filtering function of the resistor **669** and the capacitor **670** can prevent misoperation of the BJT **668** due to noises. In practical use, the resistor **669** and the capacitor **670** may be omitted, so they are each depicted in a dotted line in FIG. **31**B. When they are omitted, the current detection signal S**531** is input directly to the base terminal of the BJT **668**.

[0304] When the LED lamp is operating normally and the current of the LED module is within a normal range, the BJT **668** is in a cutoff state, and the resistor **666** works to pull up the base voltage of the BJT **667**, which therefore enters a conducting state. In this state, the electric potential at the second terminal of the symmetrical trigger diode **662** is determined based on the voltage at the voltage terminal **521'** of the biasing voltage source and voltage division ratios between the resistor **671** and the parallel-connected resistors **664** and **665**. Since the resistance of resistor **665** is relatively small, voltage share for the resistor **665** is smaller and the electric potential at the second terminal of the symmetrical trigger diode **662** is therefore pulled down. Then, the electric potential at the control terminal of the bidirectional triode thyristor **661** is in turn pulled down by the symmetrical trigger diode **662**, caus-

ing the bidirectional triode thyristor **661** to enter a cutoff state, which cutoff state makes the protection circuit **660** not being in a protection state.

[0305] When the current of the LED module exceeds an overcurrent value, the logic level of current detection signal S**531** will increase significantly to cause the BJT **668** to enter a conducting state and then pull down the base voltage of the BJT **667**, which thereby enters a cutoff state. In this case, the electric potential at the second terminal of the symmetrical trigger diode **662** is determined based on the voltage at the voltage terminal **521'** of the biasing voltage source and voltage division ratios between the resistor **671** and the parallel-connected resistors **664** and **666**. Since the resistance of resistor **666** is relatively high, voltage share for the resistor **666** is larger and the electric potential at the second terminal of symmetrical trigger diode **662** is therefore higher. Then the electric potential at the control terminal of bidirectional triode thyristor **661** is in turn pulled up by the symmetrical trigger diode **662**, causing the bidirectional triode thyristor **661** to enter a conducting state, which conducting state works to restrain or clamp down on the voltage between the filtering output terminals **521** and **522** and thus makes the protection circuit **660** being in a protection state.

[0306] In this embodiment, the voltage at the voltage terminal **521'** of the biasing voltage source is determined based on the trigger voltage of the bidirectional triode thyristor **661**, and voltage division ratio between the resistor **671** and the parallel-connected resistors **664** and **665**, or voltage division ratio between the resistor **671** and the parallel-connected resistors **664** and **666**. Through voltage division between the resistor **671** and the parallel-connected resistors **664** and **665**, the voltage from the voltage terminal **521'** at the symmetrical trigger diode **662** will be lower than the trigger voltage of the bidirectional triode thyristor **661**. Otherwise, through voltage division between the resistor **671** and the parallel-connected resistors **664** and **666**, the voltage from the voltage terminal **521'** at the symmetrical trigger diode **662** will be higher than the trigger voltage of the bidirectional triode thyristor **661**. For example, in some embodiments, when the current of the LED module exceeds an overcurrent value, the voltage division circuit is adjusted to the voltage division ratio between the resistor **671** and the parallel-connected resistors **664** and **666**, causing a higher portion of the voltage at the voltage terminal **521'** to result at the symmetrical trigger diode **662**, achieving a hysteresis function. Specifically, the BJTs **667** and **668** as switches are respectively connected in series to the resistors **665** and **666** which determine the voltage division ratios. The voltage division circuit is configured to control turning on which one of the BJTs **667** and **668** and leaving the other off for determining the relevant voltage division ratio, according to whether the current of the LED module exceeds an overcurrent value. And the clamping circuit determines whether to restrain or clamp down on the voltage of the LED module according to the applying voltage division ratio.

[0307] Next, an exemplary operation of the protection circuit **660** in overvoltage protection is described as follows.

[0308] The node connecting the resistor **669** and the capacitor **670** is to receive a current detection signal S**531**, which represents the magnitude of current through the LED module. As described above, the protection circuit **660** still works to provide overcurrent protection. The other end of resistor **671** is a voltage terminal **521'**. In this embodiment concerning overvoltage protection, the voltage terminal **521'** is coupled to the positive terminal of the LED module to detect the voltage of the LED module. Taking previously described embodiments for example, in embodiments of FIGS. **28**A and **28**B, the LED lighting module **530** doesn't include the driving circuit **1530**, and the voltage terminal **521'** would be coupled to the filtering output terminal **521**. Whereas in embodiments of FIGS. **29**A-**29**G, the LED lighting module **530** includes the driving circuit **1530**, and the voltage terminal **521'** would be coupled to the driving output terminal **1521**. In this embodiment, voltage division ratios between the resistor **671** and the parallel-connected resistors **664** and **665**, and voltage division ratios between the resistor **671** and the parallel-connected resistors **664** and **666** will be adjusted according to the voltage at the voltage terminal **521'**, for example, the voltage at the driving output terminal **1521** or the filtering output terminal **521**. Therefore, normal overcurrent protection can still be provided by the protection circuit **660**.

[0309] In some embodiments, when the LED lamp is operating normally, assuming overcurrent condition doesn't occur, the electric potential at the second terminal of the symmetrical trigger diode **662** is determined based on the voltage at the voltage terminal **521'** and voltage division ratios between the resistor **671** and the parallel-connected resistors **664** and **665**, and is insufficient to trigger the bidirectional triode thyristor **661**. Then the bidirectional triode thyristor **661** is in a cutoff state, making the protection circuit **660** not being in a protection state. On the other hand, when the LED module is operating abnormally with the voltage at the positive terminal of the LED module exceeding an overvoltage value, the electric potential at the second terminal of symmetrical trigger diode **662** is sufficiently high to trigger the bidirectional triode thyristor **661** when the voltage at the first terminal of the symmetrical trigger diode **662** is larger than the trigger voltage of the bidirectional triode thyristor **661**. Then the bidirectional triode thyristor **661** enters a conducting state, making the protection circuit **660** being in a protection state to restrain or clamp down on the logic level of the filtered signal.

[0310] As described above, the protection circuit **660** provides one or two of the functions of overcurrent protection and overvoltage protection.

[0311] In some embodiments, the protection circuit **660** may further include a zener diode connected to the resistor **664** in parallel, which zener diode is used to limit or restrain the voltage across the resistor **664**. The breakdown voltage of the zener diode is in some embodiments in the range of about 25-50 volts, and in some embodiments may be about 36 volts.

[0312] Further, a silicon controlled rectifier may be substituted for the bidirectional triode thyristor **661**, without negatively affecting the protection functions. Using a silicon controlled rectifier instead of a bidirectional triode thyristor **661** has a lower voltage drop across itself in conduction than that across the bidirectional triode thyristor **661** in conduction.

[0313] In one embodiment, values of the parameters of the protection circuit **660** may be set as follows. The resistance of resistor **669** may be about 10 ohms. The capacitance of capacitor **670** may be about 1 nF. The capacitance of capacitor **633** may be about 10 nF. The (breakover) voltage of symmetrical trigger diode **662** may be in the range of about 26-36 volts. The resistance of resistor **671** may be in the range of about 300 k-600 k ohms, and may be, in some embodiments, about 540 k ohms. The resistance of resistor **666** is in some embodiments in the range of about 100 k-300 k ohms, and may be, in some embodiments, about 220 k ohms. The resistance of resistor **665** is in some embodiments in the range of

about 30 k-100 k ohms, and may be, in some embodiments about 40 k ohms. The resistance of resistor **664** is in some embodiments in the range of about 100 k-300 k ohms, and may be, in some embodiments about 220 k ohms.

[0314] FIG. **32**A is a block diagram of a power supply module in an LED lamp according to an embodiment of the present invention. Compared to FIG. **29**A, the embodiment of FIG. **32**A includes two rectifying circuits **510** and **540**, a filtering circuit **520**, and a driving circuit **1530**, and further includes a mode switching circuit **580**. In this embodiment, a driving circuit **1530** and an LED module **630** compose the LED lighting module **530**. The mode switching circuit **580** is coupled to at least one of the filtering output terminals **521** and **522** and at least one of the driving output terminals **1521** and **1522**, for determining whether to perform a first driving mode or a second driving mode, as according to a frequency of the external driving signal. In the first driving mode, a filtered signal from the filtering circuit **520** is input into the driving circuit **1530**, while in the second driving mode the filtered signal bypasses at least a component of the driving circuit **1530**, making the driving circuit **1530** stop working in conducting the filtered signal, allowing the filtered signal to (directly) reach and drive the LED module **630**. The bypassed component(s) of the driving circuit **1530** may include an inductor or a switch, which when bypassed makes the driving circuit **1530** unable to transfer and/or convert power, and then stop working in conducting the filtered signal. If the driving circuit **1530** includes a capacitor, the capacitor can still be used to filter out ripples of the filtered signal in order to stabilize the voltage across the LED module. When the mode switching circuit **580** determines on performing the first driving mode, allowing the filtered signal to be input to the driving circuit **1530**, the driving circuit **1530** then transforms the filtered signal into a driving signal for driving the LED module **630** to emit light. On the other hand, when the mode switching circuit **580** determines on performing the second driving mode, allowing the filtered signal to bypass the driving circuit **1530** to reach the LED module **630**, the filtering circuit **520** becomes in effect a driving circuit for LED module **630**. Then the filtering circuit **520** provides the filtered signal as a driving signal for the LED module for driving the LED module to emit light.

[0315] It's worth noting that the mode switching circuit **580** can determine whether to perform the first driving mode or the second driving mode based on a user's instruction or a detected signal received by the LED lamp through the pins **501**, **502**, **503**, and **504**. With the mode switching circuit, the power supply module of the LED lamp can adapt to or perform one of appropriate driving modes corresponding to different application environments or driving systems, thus improving the compatibility of the LED lamp.

[0316] FIG. **32**B is a schematic diagram of the mode switching circuit in an LED lamp according to an embodiment of the present invention. Referring to FIG. **32**B, a mode switching circuit **680** includes a mode switch **681** suitable for use with the driving circuit **1630** in FIG. **29**C. Referring to FIGS. **32**B and **29**C, the mode switch **681** has three terminals **683**, **684**, and **685**, wherein the terminal **683** is coupled to the driving output terminal **1522**, the terminal **684** is coupled to the filtering output terminal **522**, and the terminal **685** is coupled to the inductor **1632** in the driving circuit **1630**.

[0317] When the mode switching circuit **680** determines on performing a first driving mode, the mode switch **681** conducts current in a first conductive path through the terminals **683** and **685** and a second conductive path through the terminals **683** and **684** is in a cutoff state. In this case, the driving output terminal **1522** is coupled to the inductor **1632**, and therefore the driving circuit **1630** is working normally, which working includes receiving a filtered signal from the filtering output terminals **521** and **522** and then transforming the filtered signal into a driving signal, output at the driving output terminals **1521** and **1522** for driving the LED module.

[0318] When the mode switching circuit **680** determines on performing a second driving mode, the mode switch **681** conducts current in the second conductive path through the terminals **683** and **684** and the first conductive path through the terminals **683** and **685** is in a cutoff state. In this case, the driving output terminal **1522** is coupled to the filtering output terminal **522**, and therefore the driving circuit **1630** stops working, and a filtered signal is input through the filtering output terminals **521** and **522** to the driving output terminals **1521** and **1522** for driving the LED module, while bypassing the inductor **1632** and the switch **1635** in the driving circuit **1630**.

[0319] FIG. **32**C is a schematic diagram of the mode switching circuit in an LED lamp according to an embodiment of the present invention. Referring to FIG. **32**C, a mode switching circuit **780** includes a mode switch **781** being suitable for use with the driving circuit **1630** in FIG. **29**C. Referring to FIGS. **32**C and **29**C, the mode switch **781** has three terminals **783**, **784**, and **785**, wherein the terminal **783** is coupled to the filtering output terminal **522**, the terminal **784** is coupled to the driving output terminal **1522**, and the terminal **785** is coupled to switch **1635** in the driving circuit **1630**.

[0320] When the mode switching circuit **780** determines on performing a first driving mode, the mode switch **781** conducts current in a first conductive path through the terminals **783** and **785** and a second conductive path through the terminals **783** and **784** is in a cutoff state. In this case, the filtering output terminal **522** is coupled to the switch **1635**, and therefore the driving circuit **1630** is working normally, which working includes receiving a filtered signal from the filtering output terminals **521** and **522** and then transforming the filtered signal into a driving signal, output at the driving output terminals **1521** and **1522** for driving the LED module.

[0321] When the mode switching circuit **780** determines on performing a second driving mode, the mode switch **781** conducts current in the second conductive path through the terminals **783** and **784** and the first conductive path through the terminals **783** and **785** is in a cutoff state. In this case, the driving output terminal **1522** is coupled to the filtering output terminal **522**, and therefore the driving circuit **1630** stops working, and a filtered signal is input through the filtering output terminals **521** and **522** to the driving output terminals **1521** and **1522** for driving the LED module, while bypassing the inductor **1632** and the switch **1635** in the driving circuit **1630**.

[0322] FIG. **32**D is a schematic diagram of the mode switching circuit in an LED lamp according to an embodiment of the present invention. Referring to FIG. **32**D, a mode switching circuit **880** includes a mode switch **881** being suitable for use with the driving circuit **1730** in FIG. **29**D. Referring to FIGS. **32**D and **29**D, the mode switch **881** has three terminals **883**, **884**, and **885**, wherein the terminal **883** is coupled to the filtering output terminal **521**, the terminal **884** is coupled to the driving output terminal **1521**, and the terminal **885** is coupled to the inductor **1732** in the driving circuit **1730**.

[0323] When the mode switching circuit **880** determines on performing a first driving mode, the mode switch **881** conducts current in a first conductive path through the terminals **883** and **885** and a second conductive path through the terminals **883** and **884** is in a cutoff state. In this case, the filtering output terminal **521** is coupled to the inductor **1732**, and therefore the driving circuit **1730** is working normally, which working includes receiving a filtered signal from the filtering output terminals **521** and **522** and then transforming the filtered signal into a driving signal, output at the driving output terminals **1521** and **1522** for driving the LED module.

[0324] When the mode switching circuit **880** determines on performing a second driving mode, the mode switch **881** conducts current in the second conductive path through the terminals **883** and **884** and the first conductive path through the terminals **883** and **885** is in a cutoff state. In this case, the driving output terminal **1521** is coupled to the filtering output terminal **521**, and therefore the driving circuit **1730** stops working, and a filtered signal is input through the filtering output terminals **521** and **522** to the driving output terminals **1521** and **1522** for driving the LED module, while bypassing the inductor **1732** and the freewheeling diode **1733** in the driving circuit **1730**.

[0325] FIG. **32**E is a schematic diagram of the mode switching circuit in an LED lamp according to an embodiment of the present invention. Referring to FIG. **32**E, a mode switching circuit **980** includes a mode switch **981** being suitable for use with the driving circuit **1730** in FIG. **29**D. Referring to FIGS. **32**E and **29**D, the mode switch **981** has three terminals **983**, **984**, and **985**, wherein the terminal **983** is coupled to the driving output terminal **1521**, the terminal **984** is coupled to the filtering output terminal **521**, and the terminal **985** is coupled to the cathode of diode **1733** in the driving circuit **1730**.

[0326] When the mode switching circuit **980** determines on performing a first driving mode, the mode switch **981** conducts current in a first conductive path through the terminals **983** and **985**, and a second conductive path through the terminals **983** and **984** is in a cutoff state. In this case, the filtering output terminal **521** is coupled to the cathode of diode **1733**, and therefore the driving circuit **1730** is working normally, which working includes receiving a filtered signal from the filtering output terminals **521** and **522** and then transforming the filtered signal into a driving signal, output at the driving output terminals **1521** and **1522** for driving the LED module.

[0327] When the mode switching circuit **980** determines on performing a second driving mode, the mode switch **981** conducts current in the second conductive path through the terminals **983** and **984** and the first conductive path through the terminals **983** and **985** is in a cutoff state. In this case, the driving output terminal **1521** is coupled to the filtering output terminal **521**, and therefore the driving circuit **1730** stops working, and a filtered signal is input through the filtering output terminals **521** and **522** to the driving output terminals **1521** and **1522** for driving the LED module, while bypassing the inductor **1732** and the freewheeling diode **1733** in the driving circuit **1730**.

[0328] FIG. **32**F is a schematic diagram of the mode switching circuit in an LED lamp according to an embodiment of the present invention. Referring to FIG. **32**F, a mode switching circuit **1680** includes a mode switch **1681** being suitable for use with the driving circuit **1830** in FIG. **29**E. Referring to FIGS. **32**F and **29**E, the mode switch **1681** has three terminals **1683**, **1684**, and **1685**, wherein the terminal **1683** is coupled to the filtering output terminal **521**, the terminal **1684** is coupled to the driving output terminal **1521**, and the terminal **1685** is coupled to switch **1835** in the driving circuit **1830**.

[0329] When the mode switching circuit **1680** determines on performing a first driving mode, the mode switch **1681** conducts current in a first conductive path through the terminals **1683** and **1685**, and a second conductive path through the terminals **1683** and **1684** is in a cutoff state. In this case, the filtering output terminal **521** is coupled to the switch **1835**, and therefore the driving circuit **1830** is working normally, which working includes receiving a filtered signal from the filtering output terminals **521** and **522** and then transforming the filtered signal into a driving signal, output at the driving output terminals **1521** and **1522** for driving the LED module.

[0330] When the mode switching circuit **1680** determines on performing a second driving mode, the mode switch **1681** conducts current in the second conductive path through the terminals **1683** and **1684** and the first conductive path through the terminals **1683** and **1685** is in a cutoff state. In this case, the driving output terminal **1521** is coupled to the filtering output terminal **521**, and therefore the driving circuit **1830** stops working, and a filtered signal is input through the filtering output terminals **521** and **522** to the driving output terminals **1521** and **1522** for driving the LED module, while bypassing the inductor **1832** and the switch **1835** in the driving circuit **1830**.

[0331] FIG. **32**G is a schematic diagram of the mode switching circuit in an LED lamp according to an embodiment of the present invention. Referring to FIG. **32**G, a mode switching circuit **1780** includes a mode switch **1781** being suitable for use with the driving circuit **1830** in FIG. **29**E. Referring to FIGS. **32**G and **29**E, the mode switch **1781** has three terminals **1783**, **1784**, and **1785**, wherein the terminal **1783** is coupled to the filtering output terminal **521**, the terminal **1784** is coupled to the driving output terminal **1521**, and the terminal **1785** is coupled to inductor **1832** in the driving circuit **1830**.

[0332] When the mode switching circuit **1780** determines on performing a first driving mode, the mode switch **1781** conducts current in a first conductive path through the terminals **1783** and **1785**, and a second conductive path through the terminals **1783** and **1784** is in a cutoff state. In this case, the filtering output terminal **521** is coupled to the inductor **1832**, and therefore the driving circuit **1830** is working normally, which working includes receiving a filtered signal from the filtering output terminals **521** and **522** and then transforming the filtered signal into a driving signal, output at the driving output terminals **1521** and **1522** for driving the LED module.

[0333] When the mode switching circuit **1780** determines on performing a second driving mode, the mode switch **1781** conducts current in the second conductive path through the terminals **1783** and **1784** and the first conductive path through the terminals **1783** and **1785** is in a cutoff state. In this case, the driving output terminal **1521** is coupled to the filtering output terminal **521**, and therefore the driving circuit **1830** stops working, and a filtered signal is input through the filtering output terminals **521** and **522** to the driving output terminals **1521** and **1522** for driving the LED module, while bypassing the inductor **1832** and the switch **1835** in the driving circuit **1830**.

[0334] FIG. **32**H is a schematic diagram of the mode switching circuit in an LED lamp according to an embodi-

ment of the present invention. Referring to FIG. **32**H, a mode switching circuit **1880** includes two mode switches **1881** and **1882** being suitable for use with the driving circuit **1930** in FIG. **29**F. Referring to FIGS. **32**H and **29**F, the mode switch **1881** has three terminals **1883**, **1884**, and **1885**, wherein the terminal **1883** is coupled to the driving output terminal **1521**, the terminal **1884** is coupled to the filtering output terminal **521**, and the terminal **1885** is coupled to the freewheeling diode **1933** in the driving circuit **1930**. And the mode switch **1882** has three terminals **1886**, **1887**, and **1888**, wherein the terminal **1886** is coupled to the driving output terminal **1522**, the terminal **1887** is coupled to the filtering output terminal **522**, and the terminal **1888** is coupled to the filtering output terminal **521**.

[0335] When the mode switching circuit **1880** determines on performing a first driving mode, the mode switch **1881** conducts current in a first conductive path through the terminals **1883** and **1885**, and a second conductive path through the terminals **1883** and **1884** is in a cutoff state, and the mode switch **1882** conducts current in a third conductive path through the terminals **1886** and **1888**, and a fourth conductive path through the terminals **1886** and **1887** is in a cutoff state. In this case, the driving output terminal **1521** is coupled to the freewheeling diode **1933**, and the filtering output terminal **521** is coupled to the driving output terminal **1522**. Therefore the driving circuit **1930** is working normally, which working includes receiving a filtered signal from the filtering output terminals **521** and **522** and then transforming the filtered signal into a driving signal, output at the driving output terminals **1521** and **1522** for driving the LED module.

[0336] When the mode switching circuit **1880** determines on performing a second driving mode, the mode switch **1881** conducts current in the second conductive path through the terminals **1883** and **1884**, and the first conductive path through the terminals **1883** and **1885** is in a cutoff state, and the mode switch **1882** conducts current in the fourth conductive path through the terminals **1886** and **1887**, and the third conductive path through the terminals **1886** and **1888** is in a cutoff state. In this case, the driving output terminal **1521** is coupled to the filtering output terminal **521**, and the filtering output terminal **522** is coupled to the driving output terminal **1522**. Therefore the driving circuit **1930** stops working, and a filtered signal is input through the filtering output terminals **521** and **522** to the driving output terminals **1521** and **1522** for driving the LED module, while bypassing the freewheeling diode **1933** and the switch **1935** in the driving circuit **1930**.

[0337] FIG. **32**I is a schematic diagram of the mode switching circuit in an LED lamp according to an embodiment of the present invention. Referring to FIG. **32**I, a mode switching circuit **1980** includes two mode switches **1981** and **1982** being suitable for use with the driving circuit **1930** in FIG. **29**F. Referring to FIGS. **32**I and **29**F, the mode switch **1981** has three terminals **1983**, **1984**, and **1985**, wherein the terminal **1983** is coupled to the filtering output terminal **522**, the terminal **1984** is coupled to the driving output terminal **1522**, and the terminal **1985** is coupled to switch **1935** in the driving circuit **1930**. And the mode switch **1982** has three terminals **1986**, **1987**, and **1988**, wherein the terminal **1986** is coupled to the filtering output terminal **521**, the terminal **1987** is coupled to the driving output terminal **1521**, and the terminal **1988** is coupled to the driving output terminal **1522**.

[0338] When the mode switching circuit **1980** determines on performing a first driving mode, the mode switch **1981** conducts current in a first conductive path through the terminals **1983** and **1985**, and a second conductive path through the terminals **1983** and **1984** is in a cutoff state, and the mode switch **1982** conducts current in a third conductive path through the terminals **1986** and **1988**, and a fourth conductive path through the terminals **1986** and **1987** is in a cutoff state. In this case, driving output terminal **1522** is coupled to the filtering output terminal **521**, and the filtering output terminal **522** is coupled to the switch **1935**. Therefore the driving circuit **1930** is working normally, which working includes receiving a filtered signal from the filtering output terminals **521** and **522** and then transforming the filtered signal into a driving signal, output at the driving output terminals **1521** and **1522** for driving the LED module.

[0339] When the mode switching circuit **1980** determines on performing a second driving mode, the mode switch **1981** conducts current in the second conductive path through the terminals **1983** and **1984**, and the first conductive path through the terminals **1983** and **1985** is in a cutoff state, and the mode switch **1982** conducts current in the fourth conductive path through the terminals **1986** and **1987**, and the third conductive path through the terminals **1986** and **1988** is in a cutoff state. In this case, the driving output terminal **1521** is coupled to the filtering output terminal **521**, and the filtering output terminal **522** is coupled to the driving output terminal **1522**. Therefore the driving circuit **1930** stops working, and a filtered signal is input through the filtering output terminals **521** and **522** to the driving output terminals **1521** and **1522** for driving the LED module, while bypassing the freewheeling diode **1933** and the switch **1935** in the driving circuit **1930**.

[0340] It's worth noting that the mode switches in the above embodiments may each comprise, for example, a single-pole double-throw switch, or comprise two semiconductor switches (such as metal oxide semiconductor transistors), for switching a conductive path on to conduct current while leaving the other conductive path cutoff. Each of the two conductive paths provides a path for conducting the filtered signal, allowing the current of the filtered signal to flow through one of the two paths, thereby achieving the function of mode switching or selection. For example, with reference to FIG. **24**A, when the lamp driving circuit **505** is not present and the LED tube lamp **500** is directly supplied by the AC power supply **508**, the mode switching circuit may determine on performing a first driving mode in which the driving circuit transforms the filtered signal into a driving signal with a logic level meeting a required logic level to properly drive the LED module to emit light. On the other hand, when the lamp driving circuit **505** is present, the mode switching circuit may determine on performing a second driving mode in which the filtered signal is (almost) directly used to drive the LED module to emit light; or alternatively the mode switching circuit may determine on performing the first driving mode to drive the LED module to emit light.

[0341] FIG. **33**A is a block diagram of a power supply module in an LED lamp according to an embodiment of the present invention. Compared to FIG. **24**B, the embodiment of FIG. **33**A includes two rectifying circuits **510** and **540**, a filtering circuit **520**, and a driving circuit **1530**, and further includes a ballast-compatible circuit **1510**. In this embodiment, a driving circuit **1530** and an LED module **630** compose the LED lighting module **530**. The ballast-compatible circuit **1510** may be coupled between the pin **501** and/or pin **502** and the rectifying circuit **510**. This embodiment is explained assuming the ballast-compatible circuit **1510** to be coupled between the pin **501** and the rectifying circuit **510**.

[0342] In an initial stage upon the activation of the driving system of the lamp driving circuit **505**, the lamp driving circuit **505**'s ability to output relevant signal(s) has not risen to a standard state. However, in the initial stage the power supply module of the LED lamp instantly or rapidly receives or conducts the AC driving signal provided by the lamp driving circuit **505**, which initial conduction is likely to fail the starting of the LED lamp by the lamp driving circuit **505** as the lamp driving circuit **505** is initially loaded by the LED lamp in this stage. For example, the internal components of the lamp driving circuit **505** may need to retrieve power from a transformed output in the lamp driving circuit **505** in order to maintain their operation upon the activation. In this case, the activation of the lamp driving circuit **505** may end up failing as its output voltage could not normally rise to a required logic level in this initial stage; or the quality factor (Q) of a resonant circuit in the lamp driving circuit **505** may vary as a result of the initial loading from the LED lamp, so as to cause the failure of the activation.

[0343] In this embodiment, in the initial stage upon activation, the ballast-compatible circuit **1510** will be in an open-circuit state, preventing the energy of the AC driving signal from reaching the LED module. After a defined delay upon the AC driving signal as an external driving signal being input to the LED tube lamp, the ballast-compatible circuit **1510** switches from a cutoff state during the delay to a conducting state, allowing the energy of the AC driving signal to start to reach the LED module. By means of the delayed conduction of the ballast-compatible circuit **1510**, operation of the LED lamp simulates the lamp-starting characteristics of a fluorescent lamp, that is, internal gases of the fluorescent lamp will normally discharge for light emission after a delay upon activation of a driving power supply. Therefore, the ballast-compatible circuit **1510** further improves the compatibility of the LED lamp with the lamp driving circuits **505** such as an electronic ballast.

[0344] FIG. **33**B is a block diagram of a power supply module in an LED lamp according to an embodiment of the present invention. Compared to FIG. **33**A, a ballast-compatible circuit **1510** in the embodiment of FIG. **33**B is coupled between the pin **503** and/or pin **504** and the rectifying circuit **540**. As explained regarding the ballast-compatible circuit **1510** in FIG. **33**A, the ballast-compatible circuit **1510** in FIG. **33**B performs the function of delaying the starting of the LED lamp, or causing the input of the AC driving signal to be delayed for a predefined time, in order to prevent the failure of starting by the lamp driving circuits **505** such as an electronic ballast.

[0345] Apart from coupling the ballast-compatible circuit **1510** between the terminal pin(s) and the rectifying circuit in the above embodiments, the ballast-compatible circuit **1510** may alternatively be included within a rectifying circuit with a different structure. FIG. **33**C illustrates an arrangement with a ballast-compatible circuit in an LED lamp according to a preferred embodiment of the present invention. Referring to FIG. **33**C, the rectifying circuit assumes the circuit structure of the rectifying circuit **810** in FIG. **25**C. The rectifying circuit **810** includes a rectifying unit **815** and a terminal adapter circuit **541**. The rectifying unit **815** is coupled to the pins **501** and **502**, the terminal adapter circuit **541** is coupled to the output terminals **511** and **512**, and the ballast-compatible circuit **1510** in FIG. **33**C is coupled between the rectifying unit **815** and the terminal adapter circuit **541**. In this case, in the initial stage upon activation of the ballast, an AC driving signal as an external driving signal is input to the LED tube lamp, where the AC driving signal can only reach the rectifying unit **815**, but cannot reach other circuits such as the terminal adapter circuit **541**, other internal filter circuitry, and the LED lighting module. Moreover, the parasitic capacitors associated with the rectifying diodes **811** and **812** within the rectifying unit **815** are quite small in capacitance and thus can be ignored. Accordingly, the lamp driving circuit **505** in the initial stage isn't loaded with or effectively connected to the equivalent capacitor or inductor of the power supply module of the LED lamp, and the quality factor (Q) of the lamp driving circuit **505** is therefore not adversely affected in this stage, resulting in a successful starting of the LED lamp by the lamp driving circuit **505**.

[0346] It's worth noting that under the condition that the terminal adapter circuit **541** doesn't include components such as capacitors or inductors, interchanging the rectifying unit **815** and the terminal adapter circuit **541** in position, meaning the rectifying unit **815** is connected to the output terminals **511** and **512** and the terminal adapter circuit **541** is connected to the pins **501** and **502**, doesn't affect or alter the function of the ballast-compatible circuit **1510**.

[0347] Further, as explained in FIGS. **25**A-**25**D, when a rectifying circuit is connected to the pins **503** and **504** instead of the pins **501** and **502**, this rectifying circuit may constitute the rectifying circuit **540**. That is, the circuit arrangement with a ballast-compatible circuit **1510** in FIG. **33**C may be alternatively included in the rectifying circuit **540** instead of the rectifying circuit **810**, without affecting the function of the ballast-compatible circuit **1510**.

[0348] In some embodiments, as described above the terminal adapter circuit **541** doesn't include components such as capacitors or inductors. Or when the rectifying circuit **610** in FIG. **25**A constitutes the rectifying circuit **510** or **540**, the parasitic capacitances in the rectifying circuit **510** or **540** are quite small and thus can be ignored. These conditions contribute to not affecting the quality factor of the lamp driving circuit **505**.

[0349] FIG. **33**D is a block diagram of a power supply module in an LED lamp according to an embodiment of the present invention. Compared to the embodiment of FIG. **33**A, a ballast-compatible circuit **1510** in the embodiment of FIG. **33**D is coupled between the rectifying circuit **540** and the filtering circuit **520**. Since the rectifying circuit **540** also doesn't include components such as capacitors or inductors, the function of the ballast-compatible circuit **1510** in the embodiment of FIG. **33**D will not be affected.

[0350] FIG. **33**E is a block diagram of a power supply module in an LED lamp according to an embodiment of the present invention. Compared to the embodiment of FIG. **33**A, a ballast-compatible circuit **1510** in the embodiment of FIG. **33**E is coupled between the rectifying circuit **510** and the filtering circuit **520**. Similarly, since the rectifying circuit **510** doesn't include components such as capacitors or inductors, the function of the ballast-compatible circuit **1510** in the embodiment of FIG. **33**E will not be affected.

[0351] FIG. **33**F is a schematic diagram of the ballast-compatible circuit according to an embodiment of the present invention. Referring to FIG. **33**F, a ballast-compatible circuit **1610** has an initial state in which an equivalent open-circuit is obtained at the ballast-compatible circuit input and output terminals **1611** and **1621**. Upon receiving an input signal at the ballast-compatible circuit input terminal **1611**, a delay will pass until a current conduction occurs through and

between the ballast-compatible circuit input and output terminals **1611** and **1621**, transmitting the input signal to the ballast-compatible circuit output terminal **1621**.

[0352] The Ballast-compatible circuit **1610** includes a diode **1612**, multiple resistors **1613**, **1615**, **1618**, **1620**, and **1622**, a bidirectional triode thyristor (TRIAC) **1614**, a DIAC or symmetrical trigger diode **1617**, a capacitor **1619**, and ballast-compatible circuit input and output terminals **1611** and **1621**. It's noted that the resistance of resistor **1613** should be quite large so that when the bidirectional triode thyristor **1614** is cutoff in an open-circuit state, an equivalent open-circuit is obtained at ballast-compatible circuit input and output terminals **1611** and **1621**.

[0353] The bidirectional triode thyristor **1614** is coupled between the ballast-compatible circuit input and output terminals **1611** and **1621**, and the resistor **1613** is also coupled between the ballast-compatible circuit input and output terminals **1611** and **1621** and in parallel to the bidirectional triode thyristor **1614**. The diode **1612**, the resistors **1620** and **1622**, and the capacitor **1619** are series-connected in sequence between the ballast-compatible circuit input and output terminals **1611** and **1621**, and are connected in parallel to the bidirectional triode thyristor **1614**. The diode **1612** has an anode connected to the bidirectional triode thyristor **1614**, and has a cathode connected to an end of the resistor **1620**. The bidirectional triode thyristor **1614** has a control terminal connected to a terminal of the symmetrical trigger diode **1617**, which has another terminal connected to an end of the resistor **1618**, which has another end connected to a node connecting the capacitor **1619** and the resistor **1622**. The resistor **1615** is connected between the control terminal of the bidirectional triode thyristor **1614** and a node connecting the resistor **1613** and the capacitor **1619**. In some embodiments, the resistors **1615**, **1618**, and **1620** could be omitted, and hence they are depicted in dotted line. When the resistor **1618** is omitted, another terminal of the symmetrical trigger diode **1617** mentioned above is directly connected to the node connecting the capacitor **1619** and the resistor **1622**. And the cathode of the diode **1612** is connected to the resistor **1622** directly when the resistor **1620** is omitted.

[0354] When an AC driving signal (such as a high-frequency high-voltage AC signal output by an electronic ballast) is initially input to the ballast-compatible circuit input terminal **1611**, the bidirectional triode thyristor **1614** will be in an open-circuit state, not allowing the AC driving signal to pass through and the LED lamp is therefore also in an open-circuit state. In this state, the AC driving signal is charging the capacitor **1619** through the diode **1612** and the resistors **1620** and **1622**, gradually increasing the voltage of the capacitor **1619**. Upon continually charging for a period of time, the voltage of the capacitor **1619** increases to be above the trigger voltage value of the symmetrical trigger diode **1617** so that the symmetrical trigger diode **1617** is turned on in a conducting state. Then the conducting symmetrical trigger diode **1617** will in turn trigger the bidirectional triode thyristor **1614** on in a conducting state. In this situation, the conducting bidirectional triode thyristor **1614** electrically connects the ballast-compatible circuit input and output terminals **1611** and **1621**, allowing the AC driving signal to flow through the ballast-compatible circuit input and output terminals **1611** and **1621**, thus starting the operation of the power supply module of the LED lamp. In this case the energy stored by the capacitor **1619** will maintain the conducting state of the bidirectional triode thyristor **1614**, to prevent the AC variation of the AC driving signal from causing the bidirectional triode thyristor **1614** and therefore the ballast-compatible circuit **1610** to be cutoff again, or to prevent or reduce the bidirectional triode thyristor **1614** alternating or switching between its conducting and cutoff states.

[0355] When the ballast-compatible circuit **1610** for the present embodiment is applied to the application circuits shown in FIGS. **33**C-**33**D, the diode **1612** could be omitted because the ballast-compatible circuit **1610** receives the signal that has rectified by the rectifying unit/circuit. In some cases, the bidirectional triode thyristor **1614** could be replaced with a silicon controlled rectifier (SCR), and the symmetrical trigger diode **1617** could be replaced with a thyristor surge suppresser. This kind of replacement does not affect the protection for the circuit. Further, using a silicon controlled rectifier instead of a bidirectional triode thyristor has a lower voltage drop across itself in conduction than that across the bidirectional triode thyristor in conduction.

[0356] In general, in hundreds of milliseconds upon activation of a lamp driving circuit **505** such as an electronic ballast, the output voltage of the ballast has risen above a certain voltage value as the output voltage hasn't been adversely affected by the sudden initial loading from the LED lamp. In some cases, the AC voltage output from some instant-start ballasts will be firstly kept at a fixed value for a short period, such as 0.01 second, and in the meanwhile, the AC voltage at the fixed value is under 300V and rises or increases with time. However, any loading added at the output of the instant-start ballast in this short period would cause the instant-start ballast failing to pull up the AC voltage for outputting, in particularly, this situation will be quite often when the input voltage of the instant-start ballast is 120V or bellow. Besides, a detection mechanism to detect whether lighting of a fluorescent lamp is achieved may be disposed in lamp driving circuits **505** such as an electronic ballast. In this detection mechanism, if a fluorescent lamp fails to be lit up for a defined period of time, an abnormal state of the fluorescent lamp is detected, causing the fluorescent lamp to enter a protection state. In view of these facts, in certain embodiments, the delay provided by the ballast-compatible circuit **1610** until conduction of the ballast-compatible circuit **1610** and then the LED lamp should be bigger than 0.01 second and may be in the range of about 0.1-3 seconds.

[0357] It's worth noting that an additional capacitor **1623** may be coupled in parallel to the resistor **1622**. The capacitor **1623** works to reflect or support instantaneous change in the voltage between the ballast-compatible circuit input and output terminals **1611** and **1621**, and will not affect the function of delayed conduction performed by the ballast-compatible circuit **1610**.

[0358] FIG. **33**G is a block diagram of a power supply module in an LED lamp according to an embodiment of the present invention. Compared to the embodiment of FIG. **24**A, the lamp driving circuit **505** in the embodiment of FIG. **33**G drives a plurality of LED tube lamps **500** connected in series, wherein a ballast-compatible circuit **1610** is disposed in each of the LED tube lamps **500**. For the convenience of illustration, two series-connected LED tube lamps **500** are assumed for example and explained as follows.

[0359] Because the two ballast-compatible circuits **1610** respectively of the two LED tube lamps **500** can actually have different delays until conduction of the LED tube lamps **500**, due to various factors such as errors occurring in production processes of some components, the actual timing of conduc-

tion of each of the ballast-compatible circuits **1610** is different. Upon activation of a lamp driving circuit **505**, the voltage of the AC driving signal provided by the lamp driving circuit **505** will be shared out by the two LED tube lamps **500** roughly equally. Subsequently when only one of the two LED tube lamps **500** first enters a conducting state, the voltage of the AC driving signal then will be borne mostly or entirely by the other LED tube lamp **500**. This situation will cause the voltage across the ballast-compatible circuits **1610** in the other LED tube lamp **500** that's not conducting to suddenly increase or be doubled, meaning the voltage between the ballast-compatible circuit input and output terminals **1611** and **1621** might even be suddenly doubled. In view of this, if the capacitor **1623** is included, the voltage division effect between the capacitors **1619** and **1623** will instantaneously increase the voltage of the capacitor **1619**, making the symmetrical trigger diode **1617** triggering the bidirectional triode thyristor **1614** into a conducting state, thus causing the two ballast-compatible circuits **1610** respectively of the two LED tube lamps **500** to become conducting almost at the same time. Therefore, by introducing the capacitor **1623**, the situation, where one of the two ballast-compatible circuits **1610** respectively of the two series-connected LED tube lamps **500** that is first conducting has its bidirectional triode thyristor **1614** then suddenly cutoff as having insufficient current passing through due to the discrepancy between the delays provided by the two ballast-compatible circuits **1610** until their respective conductions, can be avoided. Therefore, using each ballast-compatible circuit **1610** with the capacitor **1623** further improves the compatibility of the series-connected LED tube lamps with each of the lamp driving circuits **505** such as an electronic ballast.

[0360] In practical use, a suggested range for the capacitance of the capacitor **1623** is about 10 pF to about 1 nF, which may in some cases be in the range of about 10 pF to about 100 pF, and may be about 47 pF in certain embodiments.

[0361] It's worth noting that the diode **1612** is used or configured to rectify the signal for charging the capacitor **1619**. Therefore, with reference to FIGS. **33**C, **33**D, and **33**E, in the case when the ballast-compatible circuit **1610** is arranged following a rectifying unit or circuit, the diode **1612** may be omitted. Thus the diode **1612** is depicted in a dotted line in FIG. **33**F.

[0362] FIG. **33**H is a schematic diagram of the ballast-compatible circuit according to another embodiment of the present invention. Referring to FIG. **33**H, a ballast-compatible circuit **1710** has an initial state in which an equivalent open-circuit is obtained at the ballast-compatible circuit input and output terminals **1711** and **1721**. Upon receiving an input signal at the ballast-compatible circuit input terminal **1711**, the ballast-compatible circuit **1710** will be in a cutoff state when the logic level of the input external driving signal is below a defined value corresponding to a conduction delay of the ballast-compatible circuit **1710**; and the ballast-compatible circuit **1710** will enter a conducting state upon the logic level of the input external driving signal reaching the defined value, thus transmitting the input signal to the ballast-compatible circuit output terminal **1721**. In some cases, the defined value is equal to or bigger than 400V.

[0363] The ballast-compatible circuit **1710** includes a bidirectional triode thyristor (TRIAC) **1712**, a DIAC or symmetrical trigger diode **1713**, multiple resistors **1714**, **1716**, and **1717**, and a capacitor **1715**. The bidirectional triode thyristor **1712** has a first terminal connected to the ballast-compatible circuit input terminal **1711**; a control terminal connected to a terminal of the symmetrical trigger diode **1713** and an end of the resistor **1714**; and a second terminal connected to another end of the resistor **1714**. The capacitor **1715** has an end connected to another terminal of the symmetrical trigger diode **1713**, and has another end connected to the second terminal of the bidirectional triode thyristor **1712**. The resistor **1717** is in parallel connection with the capacitor **1715**, and is therefore also connected to another terminal of the symmetrical trigger diode **1713** and the second terminal of the bidirectional triode thyristor **1712** mentioned above. And the resistor **1716** has an end connected to the node connecting the capacitor **1715** and the symmetrical trigger diode **1713**, and has another end connected to the ballast-compatible circuit output terminal **1721**.

[0364] When an AC driving signal (such as a high-frequency high-voltage AC signal output by an electronic ballast) is initially input to the ballast-compatible circuit input terminal **1711**, the bidirectional triode thyristor **1712** will be in an open-circuit state, not allowing the AC driving signal to pass through and the LED lamp is therefore also in an open-circuit state. The input of the AC driving signal causes a potential difference between the ballast-compatible circuit input terminal **1711** and the ballast-compatible circuit output terminal **1721**. When the AC driving signal increases with time to eventually reach a sufficient amplitude (which is a defined logic level after the delay) after a period of time, the signal logic level at the ballast-compatible circuit output terminal **1721** has a reflected voltage at the control terminal of the bidirectional triode thyristor **1712** after passing through the resistor **1716**, the parallel-connected capacitor **1715** and the resistor **1717**, and the resistor **1714**, wherein the reflected voltage then triggers the bidirectional triode thyristor **1712** into a conducting state. This conducting state makes the ballast-compatible circuit **1710** entering a conducting state which causes the LED lamp to operate normally. Upon the bidirectional triode thyristor **1712** conducting, a current flows through the resistor **1716** and then charges the capacitor **1715** to store a specific voltage on the capacitor **1715**. In this case, the energy stored by the capacitor **1715** will maintain the conducting state of the bidirectional triode thyristor **1712**, to prevent the AC variation of the AC driving signal from causing the bidirectional triode thyristor **1712** (or the ballast-compatible circuit **1710**) to be cutoff again, or to prevent the situation of the bidirectional triode thyristor **1712** alternating or switching between its conducting and cutoff states.

[0365] FIG. **33**I illustrates the ballast-compatible circuit according to an embodiment of the present invention. Referring to FIG. **33**I, a ballast-compatible circuit **1810** includes a housing **1812**, a metallic electrode **1813**, a bimetallic strip **1814**, and a heating filament **1816**. The metallic electrode **1813** and the heating filament **1816** protrude from the housing **1812**, so that they each have a portion inside the housing **1812** and a portion outside of the housing **1812**. The metallic electrode **1813**'s outside portion has a ballast-compatible circuit input terminal **1811**, and the heating filament **1816**'s outside portion has a ballast-compatible circuit output terminal **1821**. The housing **1812** is hermetic or tightly sealed and contains inertial gas **1815** such as helium gas. The bimetallic strip **1814** is inside the housing **1812** and is physically and electrically connected to the portion of heating filament **1816** that is inside the housing **1812**. And there is a spacing between the bimetallic strip **1814** and the metallic electrode **1813**, so that the ballast-compatible circuit input terminal **1811** and the

ballast-compatible circuit output terminal **1821** are not electrically connected in the initial state of the ballast-compatible circuit **1810**. The bimetallic strip **1814** may include two metallic strips with different temperature coefficients, wherein the metallic strip closer to the metallic electrode **1813** has a smaller temperature coefficient, and the metallic strip more away from the metallic electrode **1813** has a larger temperature coefficient.

[0366] When an AC driving signal (such as a high-frequency high-voltage AC signal output by an electronic ballast) is initially input at the ballast-compatible circuit input terminal **1811** and the ballast-compatible circuit output terminal **1821**, a potential difference between the metallic electrode **1813** and the heating filament **1816** is formed. When the potential difference increases enough to cause electric arc or arc discharge through the inertial gas **1815**, meaning when the AC driving signal increases with time to eventually reach the defined logic level after a delay, then the inertial gas **1815** is then heated to cause the bimetallic strip **1814** to swell toward the metallic electrode **1813** (as in the direction of the broken-line arrow in FIG. **33**I), with this swelling eventually causing the bimetallic strip **1814** to bear against or close to the metallic electrode **1813**, forming the physical and electrical connections between them. In this situation, there is electrical conduction between the ballast-compatible circuit input terminal **1811** and the ballast-compatible circuit output terminal **1821**. Then the AC driving signal flows through and thus heats the heating filament **1816**. In this heating process, the heating filament **1816** allows a current to flow through when electrical conduction exists between the metallic electrode **1813** and the bimetallic strip **1814**, causing the temperature of the bimetallic strip **1814** to be above a defined conduction temperature. As a result, since the respective temperature of the two metallic strips of the bimetallic strip **1814** with different temperature coefficients are maintained above the defined conduction temperature, the bimetallic strip **1814** will bend against or toward the metallic electrode **1813**, thus maintaining or supporting the physical joining or connection between the bimetallic strip **1814** and the metallic electrode **1813**. Therefore, upon receiving an input signal at the ballast-compatible circuit input and output terminals **1811** and **1821**, a delay will pass until an electrical/current conduction occurs through and between the ballast-compatible circuit input and output terminals **1811** and **1821**.

[0367] Therefore, an exemplary ballast-compatible circuit such as described herein may be coupled between any pin and any rectifying circuit described above in the invention, wherein the ballast-compatible circuit will be in a cutoff state in a defined delay upon an external driving signal being input to the LED tube lamp, and will enter a conducting state after the delay. Otherwise, the ballast-compatible circuit will be in a cutoff state when the logic level of the input external driving signal is below a defined value corresponding to a conduction delay of the ballast-compatible circuit; and the ballast-compatible circuit will enter a conducting state upon the logic level of the input external driving signal reaching the defined value. Accordingly, the compatibility of the LED tube lamp described herein with the lamp driving circuits **505** such as an electronic ballast is further improved by using such a ballast-compatible circuit.

[0368] FIG. **34**A is a block diagram of a power supply module in an LED tube lamp according to an embodiment of the present invention. Compared to that shown in FIG. **24**B, the present embodiment comprises two rectifying circuits **510** and **540**, a filtering circuit **520**, and a driving circuit **1530**, and further comprises two ballast-compatible circuits **1540**. In this embodiment, a driving circuit **1530** and an LED module **630** compose the LED lighting module **530**. The two ballast-compatible circuits **1540** are coupled respectively between the pin **503** and the rectifying output terminal **511** and between the pin **504** and the rectifying output terminal **511**. Referring to FIG. **24**A, the lamp driving circuit **505** is an electronic ballast for supplying an AC driving signal to drive the LED lamp of the present invention.

[0369] Two ballast-compatible circuits **1540** are initially in conducting states, and then enter into cutoff states in a delay. Therefore, in an initial stage upon activation of the lamp driving circuit **505**, the AC driving signal is transmitted through the pin **503**, the corresponding ballast-compatible circuit **1540**, the rectifying output terminal **511** and the rectifying circuit **510**, or through the pin **504**, the corresponding ballast-compatible circuit **1540**, the rectifying output terminal **511** and the rectifying circuit **510** of the LED lamp, and the filtering circuit **520** and the LED lighting module **530** of the LED lamp are bypassed. Thereby, the LED lamp presents almost no load and does not affect the quality factor of the lamp driving circuit **505** at the beginning, and so the lamp driving circuit can be activated successfully. The two ballast-compatible circuits **1540** are cut off after a time period while the lamp driving circuit **505** has been activated successfully. After that, the lamp driving circuit **505** has a sufficient drive capability for driving the LED lamp to emit light.

[0370] FIG. **34**B is a block diagram of a power supply module in an LED tube lamp according to an embodiment of the present invention. Compared to that shown in FIG. **34**A, two ballast-compatible circuits **1540** are changed to be coupled respectively between the pin **503** and the rectifying output terminal **512** and between the pin **504** and the rectifying output terminal **512**. Similarly, two ballast-compatible circuits **1540** are initially in conducting states, and then changed to cutoff states after an objective delay. Thereby, the lamp driving circuit **505** drives the LED lamp to emit light after the lamp driving circuit **505** has activated.

[0371] It is worth noting that the arrangement of the two ballast-compatible circuits **1540** may be changed to be coupled between the pin **501** and the rectifying terminal **511** and between the pin **502** and the rectifying terminal **511**, or between the pin **501** and the rectifying terminal **512** and between the pin **502** and the rectifying terminal **512**, for having the lamp driving circuit **505** drive the LED lamp to emit light after being activated.

[0372] FIG. **34**C is a block diagram of a power supply module in an LED tube lamp according to an embodiment of the present invention. Compared to that shown in FIGS. **34**A and **34**B, the rectifying circuit **810** shown in FIG. **25**C replaces the rectifying circuit **540**, and the rectifying unit **815** of the rectifying circuit **810** is coupled to the pins **503** and **504** and the terminal adapter circuit **541** thereof is coupled to the rectifying output terminals **511** and **512**. The arrangement of the two ballast-compatible circuits **1540** is also changed to be coupled respectively between the pin **501** and the half-wave node **819** and between the pin **502** and the half-wave node **819**.

[0373] In an initial stage upon activation of the lamp driving circuit **505**, two ballast-compatible circuits **1540** are initially in conducting states. At this moment, the AC driving signal is transmitted through the pin **501**, the corresponding ballast-compatible circuit **1540**, the half-wave node **819** and the

rectifying unit **815**, or the pin **502**, the corresponding ballast-compatible circuit **1540**, the half-wave node **819** and the rectifying unit **815** of the LED lamp, and the terminal adapter circuit **541**, the filtering circuit **520** and the LED lighting module **530** of the LED lamp are bypassed. Thereby, the LED lamp presents almost no load and does not affect the quality factor of the lamp driving circuit **505** at the beginning, and so the lamp driving circuit can be activated successfully. The two ballast-compatible circuits **1540** are cut off after a time period while the lamp driving circuit **505** has been activated successfully. After that, the lamp driving circuit **505** has a sufficient drive capability for driving the LED lamp to emit light.

[0374] It is worth noting that the rectifying circuit **810** shown in FIG. **25**C may replace the rectifying circuit **510** of the present embodiment shown in FIG. **34**C. Wherein, the rectifying unit **815** of the rectifying circuit **810** is coupled to the pins **501** and **502** and the terminal adapter circuit **541** thereof is coupled to the rectifying output terminals **511** and **512**. The arrangement of the two ballast-compatible circuits **1540** is also changed to be coupled respectively between the pin **503** and the half-wave node **819** and between the pin **504** and the half-wave node **819**. Accordingly, the ballast-compatible circuit **1540** can still make the lamp driving circuit **505** drive the LED lamp to emit light after being activated.

[0375] FIG. **34**D is a schematic diagram of a ballast-compatible circuit according to an embodiment of the present invention, which is applicable to the embodiments shown in FIGS. **34**A and **34**C and the described modification thereof.

[0376] A ballast-compatible circuit **1640** comprises multiple resistors **1643**, **1645**, **1648** and **1650**, two capacitors **1644** and **1649**, two diodes **1647** and **1652**, two bipolar junction transistors (BJT) **1646** and **1651**, a ballast-compatible circuit terminal **1641** and a ballast-compatible circuit terminal **1642**. One end of the resistor **1645** is coupled to the ballast-compatible circuit terminal **1641**, and the other end is coupled to an emitter of the BJT **1646**. A collector of the BJT **1646** is coupled to a positive end of the diode **1647**, and a negative end thereof is coupled to the ballast-compatible circuit terminal **1642**. The resistor **1643** and the capacitor **1644** are connected in series with each other and coupled between the emitter and the collector of the BJT **1646**, and the connection node of the resistor **1643** and the capacitor **1644** is coupled to a base of the BJT **1646**. One end of the resistor **1650** is coupled to the ballast-compatible circuit terminal **1642**, and the other end is coupled to an emitter of the BJT **1651**. A collector of the BJT **1651** is coupled to a positive end of the diode **1652**, and a negative end thereof is coupled to the ballast-compatible circuit terminal **1641**. The resistor **1648** and the capacitor **1649** are connected in series with each other and coupled between the emitter and the collector of the BJT **1651**, and the connection node of the resistor **1648** and the capacitor **1649** is coupled to a base of the BJT **1651**.

[0377] In an initial stage upon the lamp driving circuit **505**, e.g. electronic ballast, being activated, voltages across the capacitors **1644** and **1649** are about zero. At this time, the BJTs **1646** and **1651** are in conducting state and the bases thereof allow currents to flow through. Therefore, in an initial stage upon activation of the lamp driving circuit **505**, the ballast-compatible circuits **1640** are in conducting state. The AC driving signal charges the capacitor **1644** through the resistor **1643** and the diode **1647**, and charges the capacitor **1649** through the resistor **1648** and the diode **1652**. After a time period, the voltages across the capacitors **1644** and **1649** reach certain voltages so as to reduce the voltages of the resistors **1643** and **1648**, thereby cutting off the BJTs **1646** and **1651**, i.e., the states of the BJTs **1646** and **1651** are cutoff states. At this time, the state of the ballast-compatible circuit **1640** is changed to the cutoff state. Thereby, the internal capacitor(s) and inductor(s) do not affect in Q-factor of the lamp driving circuit **505** at the beginning for ensuring the lamp driving circuit activating. Hence, the ballast-compatible circuit **1640** improves the compatibility of LED lamp with the electronic ballast.

[0378] In summary, the two ballast-compatible circuits of the present invention are respectively coupled between a connection node of the rectifying circuit and the filtering circuit (i.e., the rectifying output terminal **511** or **512**) and the pin **501** and between the connection node and the pin **502**, or coupled between the connection node and the pin **503** and the connection node and the pin **504**. The two ballast-compatible circuits conduct for an objective delay upon the external driving signal being input into the LED tube lamp, and then are cut off after the objective delay for enhancing the compatibility of the LED lamp with the electronic ballast.

[0379] FIG. **35**A is a block diagram of a power supply module in an LED tube lamp according to an embodiment of the present invention. Compared to that shown in FIG. **24**B, the ED tube lamp comprises two rectifying circuits **510** and **540**, a filtering circuit **520**, and an LED lighting module **530**, and further comprises two filament-simulating circuits **1560**. The filament-simulating circuits **1560** are respectively coupled between the pins **501** and **502** and coupled between the pins **503** and **504**, for improving a compatibility with a lamp driving circuit having filament detection function, e.g.: program-start ballast.

[0380] In an initial stage upon the lamp driving circuit having filament detection function being activated, the lamp driving circuit will determine whether the filaments of the lamp operate normally or are in an abnormal condition of short-circuit or open-circuit. Once determining the abnormal condition of the filaments, the lamp driving circuit stops operating and enters a protection state. In order to avoid that the lamp driving circuit erroneously determines the LED tube lamp to be abnormal due to the LED tube lamp having no filament, the two filament-simulating circuits **1560** simulate the operation of actual filaments of a fluorescent tube to have the lamp driving circuit enter into a normal state to start the LED lamp normally.

[0381] FIG. **35**B is a schematic diagram of a filament-simulating circuit according to an embodiment of the present invention. The filament-simulating circuit comprises a capacitor **1663** and a resistor **1665** connected in parallel, and two ends of the capacitor **1663** and two ends of the resistor **1665** are re respectively coupled to the filament simulating terminals **1661** and **1662**. Referring to FIG. **35**A, the filament simulating terminals **1661** and **1662** of the two filament simulating circuits **1660** are respectively coupled to the pins **501** and **502** and the pins **503** and **504**. During the filament detection process, the lamp driving circuit outputs a detection signal to detect the state of the filaments. The detection signal passes the capacitor **1663** and the resistor **1665** and so the lamp driving circuit determines that the filaments of the LED lamp are normal.

[0382] In addition, a capacitance value of the capacitor **1663** is low and so a capacitive reactance (equivalent impedance) of the capacitor **1663** is far lower than an impedance of the resistor **1665** due to the lamp driving circuit outputting a high-frequency alternative current (AC) signal to drive LED

lamp. Therefore, the filament-simulating circuit **1660** consumes fairly low power when the LED lamp operates normally, and so it almost does not affect the luminous efficiency of the LED lamp.

[0383] FIG. **35**C is a schematic block diagram including a filament-simulating circuit according to an embodiment of the present invention. In the present embodiment, the filament-simulating circuit **1660** replaces the terminal adapter circuit **541** of the rectifying circuit **810** shown in FIG. **25**C, which is adopted as the rectifying circuit(s) **510** or/and **540** in the LED lamp. For example, the filament-simulating circuit **1660** of the present embodiment has both of filament simulating and terminal adapting functions. Referring to FIG. **35**A, the filament simulating terminals **1661** and **1662** of the filament-simulating circuit **1660** are respectively coupled to the pins **501** and **502** or/and pins **503** and **504**. The half-wave node **819** of the rectifying unit **815** in the rectifying circuit **810** is coupled to the filament simulating terminal **1662**.

[0384] FIG. **35**D is a schematic block diagram including a filament-simulating circuit according to another embodiment of the present invention. Compared to that shown in FIG. **35**C, the half-wave node is changed to be coupled to the filament simulating terminal **1661**, and the filament-simulating circuit **1660** in the present embodiment still has both of filament simulating and terminal adapting functions.

[0385] FIG. **35**E is a schematic diagram of a filament-simulating circuit according to another embodiment of the present invention. A filament-simulating circuit **1760** comprises two capacitors **1763** and **1764**, and two resistors **1765** and **1766**. The capacitors **1763** and **1764** are connected in series and coupled between the filament simulating terminals **1661** and **1662**. The resistors **1765** and **1766** are connected in series and coupled between the filament simulating terminals **1661** and **1662**. Furthermore, the connection node of the capacitors **1763** and **1764** is coupled to that of the resistors **1765** and **1766**. Referring to FIG. **35**A, the filament simulating terminals **1661** and **1662** of the filament-simulating circuit **1760** are respectively coupled to the pins **501** and **502** and the pins **503** and **504**. When the lamp driving circuit outputs the detection signal for detecting the state of the filament, the detection signal passes the capacitors **1763** and **1764** and the resistors **1765** and **1766** so that the lamp driving circuit determines that the filaments of the LED lamp are normal.

[0386] It is worth noting that in some embodiments, capacitance values of the capacitors **1763** and **1764** are low and so a capacitive reactance of the serially connected capacitors **1763** and **1764** is far lower than an impedance of the serially connected resistors **1765** and **1766** due to the lamp driving circuit outputting the high-frequency AC signal to drive LED lamp. Therefore, the filament-simulating circuit **1760** consumes fairly low power when the LED lamp operates normally, and so it almost does not affect the luminous efficiency of the LED lamp. Moreover, any one of the capacitor **1763** and the resistor **1765** is short circuited or is an open circuit, or any one of the capacitor **1764** and the resistor **1766** is short circuited or is an open circuit, the detection signal still passes through the filament-simulating circuit **1760** between the filament simulating terminals **1661** and **1662**. Therefore, the filament-simulating circuit **1760** still operates normally when any one of the capacitor **1763** and the resistor **1765** is short circuited or is an open circuit or any one of the capacitor **1764** and the resistor **1766** is short circuited or is an open circuit, and so it has quite high fault tolerance.

[0387] The embodiment of filament-simulating circuit mentioned above could use ceramic capacitor or metallized polypropylene film capacitor, such as the ceramic capacitor in class 2, the metallized polypropylene film capacitor(X2). When the metallized polypropylene film capacitor(X2) is adopted, since its capacitance is smaller than 100 nF and it has a small inherent impedance, it can make the current of the filament-simulating circuit down to tens mA to reduce power consumption. Also, the heating caused by the inherent impedance is smaller, the temperature could be above 70 degrees Celsius or even in the range of 50-60 degrees Celsius.

[0388] In some cases, the circuit design adopts the flexible sheet to make all of or some of the LED components and the active/passive parts of the AC power module being able to be disposed on the same flexible sheet or different flexible sheets to simplify the structure design in the LED lamp. The capacitor(s) may be preferable to, for example, X7R multi-layer ceramic capacitor and the capacitance thereof can in some embodiments be bigger than 100 nF.

[0389] FIG. **35**F is a schematic block diagram including a filament-simulating circuit according to an embodiment of the present invention. In the present embodiment, the filament-simulating circuit **1860** replaces the terminal adapter circuit **541** of the rectifying circuit **810** shown in FIG. **25**C, which is adopted as the rectifying circuit **510** or/and **540** in the LED lamp. For example, the filament-simulating circuit **1860** of the present embodiment has both of filament simulating and terminal adapting functions. An impedance of the filament-simulating circuit **1860** has a negative temperature coefficient (NTC), i.e., the impedance at a higher temperature is lower than that at a lower temperature. In the present embodiment, the filament-simulating circuit **1860** comprises two NTC resistors **1863** and **1864** connected in series and coupled to the filament simulating terminals **1661** and **1662**. Referring to FIG. **35**A, the filament simulating terminals **1661** and **1662** are respectively coupled to the pins **501** and **502** or/and the pins **503** and **504**. The half-wave node **819** of the rectifying unit **815** in the rectifying circuit **810** is coupled to a connection node of the NTC resistors **1863** and **1864**.

[0390] When the lamp driving circuit outputs the detection signal for detecting the state of the filament, the detection signal passes the NTC resistors **1863** and **1864** so that the lamp driving circuit determines that the filaments of the LED lamp are normal. The impedance of the serially connected NTC resistors **1863** and **1864** is gradually decreased with the gradually increasing of temperature due to the detection signal or a preheat process. When the lamp driving circuit enters into the normal state to start the LED lamp normally, the impedance of the serially connected NTC resistors **1863** and **1864** is decreased to a relative low value and so the power consumption of the filament simulation circuit **1860** is lower.

[0391] An exemplary impedance of the filament-simulating circuit **1860** can be 10 ohms or more at room temperature (25 degrees Celsius) and may be decreased to a range of about 2-10 ohms when the lamp driving circuit enters into the normal state. It may be preferred that the impedance of the filament-simulating circuit **1860** is decreased to a range of about 3-6 ohms when the lamp driving circuit enters into the normal state.

[0392] FIG. **36**A is a block diagram of a power supply module in an LED tube lamp according to an embodiment of the present invention. Compared to that shown in FIG. **24**B, the present embodiment comprises two rectifying circuits **510** and **540**, a filtering circuit **520**, and an LED lighting

module **530**, and further comprises an over voltage protection (OVP) circuit **1570**. The OVP circuit **1570** is coupled to the filtering output terminals **521** and **522** for detecting the filtered signal. The OVP circuit **1570** clamps the logic level of the filtered signal when determining the logic level thereof higher than a defined OVP value. Hence, the OVP circuit **1570** protects the LED lighting module **530** from damage due to an OVP condition.

[0393] FIG. **36**B is a schematic diagram of an overvoltage protection (OVP) circuit according to an embodiment of the present invention. An OVP circuit **1670** comprises a voltage clamping diode **1671**, such as zener diode, coupled to the filtering output terminals **521** and **522**. The voltage clamping diode **1671** is conducted to clamp a voltage difference at a breakdown voltage when the voltage difference of the filtering output terminals **521** and **522** (i.e., the logic level of the filtered signal) reaches the breakdown voltage. The breakdown voltage may be preferred in a range of about 40 V to about 100 V, and more preferred in a range of about 55 V to about 75V.

[0394] FIG. **37**A is a block diagram of a power supply module in an LED tube lamp according to an embodiment of the present invention. Compared to that shown in FIG. **35**A, the present embodiment comprises two rectifying circuits **510** and **540**, a filtering circuit **520**, an LED lighting module **530** and two filament-simulating circuits **1560**, and further comprises a ballast detection circuit **1590**. The ballast detection circuit **1590** may be coupled to any one of the pins **501**, **502**, **503** and **504** and a corresponding rectifying circuit of the rectifying circuits **510** and **540**. In the present embodiment, the ballast detection circuit **1590** is coupled between the pin **501** and the rectifying circuit **510**.

[0395] The ballast detection circuit **1590** detects the AC driving signal or a signal input through the pins **501**, **502**, **503** and **504**, and determines whether the input signal is provided by an electric ballast based on the detected result.

[0396] FIG. **37**B is a block diagram of a power supply module in an LED tube lamp according to an embodiment of the present invention. Compared to that shown in FIG. **37**A, the rectifying circuit **810** shown in FIG. **25**C replaces the rectifying circuit **540** in the present embodiment. The ballast detection circuit **1590** is coupled between the rectifying unit **815** and the terminal adapter circuit **541**. One of the rectifying unit **815** and the terminal adapter circuit **541** is coupled to the pins **503** and **504**, and the other one is coupled to the rectifying output terminals **511** and **512**. In the present embodiment, the rectifying unit **815** is coupled to the pins **503** and **504**, and the terminal adapter circuit **541** is coupled to the rectifying output terminals **511** and **512**. Similarly, the ballast detection circuit **1590** detects the signal input through the pins **503** and **504** for determining the input signal whether provided by an electric ballast according to the frequency of the input signal.

[0397] In addition, the rectifying circuit **810** may replace the rectifying circuit **510** instead of the rectifying circuit **540**, and the ballast detection circuit **1590** is coupled between the rectifying unit **815** and the terminal adapter circuit **541** in the rectifying circuit **510**.

[0398] FIG. **37**C is a block diagram of a ballast detection circuit according to an embodiment of the present invention. A ballast detection circuit **1590** comprises a detection circuit **1590***a* and a switch circuit **1590***b*. The switch circuit **1590***b* is coupled to two switch terminals **1591** and **1592**. The detection circuit **1590***a* is coupled to two detection terminals **1593** and **1594** for detecting a signal transmitted through the detection terminals **1593** and **1594**. Alternatively, the switch terminals **1591** and **1592** serves as the detection terminals and the detection terminals **1593** and **1594** are omitted. For example, in certain embodiments, the switch circuit **1590***b* and the detection circuit **1590***a* are commonly coupled to the switch terminals **1591** and **1592**, and the detection circuit **1590***a* detects a signal transmitted through the switch terminals **1591** and **1592**. Hence, the detection terminals **1593** and **1594** are depicted by dotted lines.

[0399] FIG. **37**D is a schematic diagram of a ballast detection circuit according to an embodiment of the present invention. A ballast detection circuit **1690** comprises a detection circuit **1690***a* and a switch circuit **1690***b*, and is coupled between the switch terminals **1591** and **1592**. The detection circuit **1690***a* comprises a symmetrical trigger diode **1691**, two resistors **1692** and **1696** and multiple capacitors **1693**, **1697** and **1698**. The switch circuit **1690***b* comprises a TRIAC **1699** and an inductor **1694**.

[0400] The capacitor **1698** is coupled between the switch terminals **1591** and **1592** for generating a detection voltage in response to a signal transmitted through the switch terminals **1591** and **1592**. When the signal is a high frequency signal, the capacitive reactance of the capacitor **1698** is fairly low and so the detection voltage generated thereby is quite small. Whereas the signal is a low frequency signal or a DC signal, the capacitive reactance of the capacitor **1698** is quite high and so the detection voltage generated thereby is quite high. The resistor **1692** and the capacitor **1693** are connected in series and coupled between two ends of the capacitor **1698**. The serially connected resistor **1692** and the capacitor **1693** is used to filter the detection signal generated by the capacitor **1698** and generates a filtered detection signal at a connection node thereof. The filter function of the resistor **1692** and the capacitor **1693** is used to filter high frequency noise in the detection signal for preventing the switch circuit **1690***b* from misoperation due to the high frequency noise. The resistor **1696** and the capacitor **1697** are connected in series and coupled between two ends of the capacitor **1693**, and transmit the filtered detection signal to one end of the symmetrical trigger diode **1691**. The serially connected resistor **1696** and capacitor **1697** performs second filtering of the filtered detection signal to enhance the filter effect of the detection circuit **1690***a*. Based on requirement for filtering logic levels of different applications, the capacitor **1697** may be omitted and the end of the symmetrical trigger diode **1691** is coupled to the connection node of the resistor **1692** and the capacitor **1693** through the resistor **1696**. Alternatively, both of the resistor **1696** and the capacitor **1697** are omitted and the end of the symmetrical trigger diode **1691** is directly coupled to the connection node of the resistor **1692** and the capacitor **1693**. Therefore, the resistor **1696** and the capacitor **1697** are depicted by dotted lines. The other end of the symmetrical trigger diode **1691** is coupled to a control end of the TRIAC **1699** of the switch circuit **1690***b*. The symmetrical trigger diode **1691** determines whether to generate a control signal **1695** to trigger the TRIAC **1699** on according to a logic level of a received signal. A first end of the TRIAC **1699** is coupled to the switch terminal **1591** and a second end thereof is coupled to the switch terminal **1592** through the inductor **1694**. The inductor **1694** is used to protect the TRIAC **1699** from damage due to a situation where the signal transmitted into the switch terminals **1591** and **1592** is over a maximum

rate of rise of commutation voltage or switching voltage, a repetitive peak voltage in off-state or a maximum rate of change of current.

[0401] When the switch terminals **1591** and **1592** receive a low frequency signal or a DC signal, the detection signal generated by the capacitor **1698** is high enough to make the symmetrical trigger diode **1691** generate the control signal **1695** to trigger the TRIAC **1699** on. At this time, the switch terminals **1591** and **1592** are shorted to bypass the circuit(s) connected in parallel with the switch circuit **1690***b*, such as a circuit coupled between the switch terminals **1591** and **1592**, the detection circuit **1690***a* and the capacitor **1698**.

[0402] In some embodiments, when the switch terminals **1591** and **1592** receive a high frequency AC signal, the detection signal generated by the capacitor **1698** is not high enough to make the symmetrical trigger diode **1691** generate the control signal **1695** to trigger the TRIAC **1699** on. At this time, the TRIAC **1699** is cut off and so the high frequency AC signal is mainly transmitted through an external circuit or the detection circuit **1690***a*.

[0403] Hence, the ballast detection circuit **1690** can determine whether the input signal is a high frequency AC signal provided by an electric ballast. If yes, the high frequency AC signal is transmitted through the external circuit or the detection circuit **1690***a*; if no, the input signal is transmitted through the switch circuit **1690***b*, bypassing the external circuit and the detection circuit **1690***a*.

[0404] It is worth noting that the capacitor **1698** may be replaced by external capacitor(s), such as at least one capacitor in the terminal adapter circuits shown in FIG. **26**A-C. Therefore, the capacitor **1698** may be omitted and be therefore depicted by a dotted line.

[0405] FIG. **37**E is a schematic diagram of a ballast detection circuit according to an embodiment of the present invention. A ballast detection circuit **1790** comprises a detection circuit **1790***a* and a switch circuit **1790***b*. The switch circuit **1790***b* is coupled between the switch terminals **1591** and **1592**. The detection circuit **1790***a* is coupled between the detection terminals **1593** and **1594**. The detection circuit **1790***a* comprises two inductors **1791** and **1792** with mutual induction, two capacitors **1793** and **1796**, a resistor **1794** and a diode **1797**. The switch circuit **1790***b* comprises a switch **1799**. In the present embodiment, the switch **1799** is a p-type depletion mode MOSFET, which is cut off when the gate voltage is higher than a threshold voltage and is conducted when the gate voltage is lower than the threshold voltage.

[0406] The inductor **1792** is coupled between the detection terminals **1593** and **1594** and induces a detection voltage in the inductor **1791** based on a current signal flowing through the detection terminals **1593** and **1594**. The logic level of the detection voltage is varied with the frequency of the current signal, and may be increased with the increasing of that frequency and reduced with the decreasing of that frequency.

[0407] In some embodiments, when the signal is a high frequency signal, the inductive reactance of the inductor **1792** is quite high and so the inductor **1791** induces the detection voltage with a quite high logic level. When the signal is a low frequency signal or a DC signal, the inductive reactance of the inductor **1792** is quite low and so the inductor **1791** induces the detection voltage with a quite low logic level. One end of the inductor **1791** is grounded. The serially connected capacitor **1793** and resistor **1794** is connected in parallel with the inductor **1791** to receive the detection voltage generated by the inductor **1791** and to filter a high frequency component of the detection voltage to generate a filtered detection voltage. The filtered detection voltage charges the capacitor **1796** through the diode **1797** to generate a control signal **1795**. Due to the diode **1797** providing a one-way charge for the capacitor **1796**, the logic level of control signal **1795** generated by the capacitor **1796** is the maximum value of the detection voltage. The capacitor **1796** is coupled to the control end of the switch **1799**. First and second ends of the switch **1799** are respectively coupled to the switch terminals **1591** and **1592**.

[0408] When the signal received by the detection terminals **1593** and **1594** is a low frequency signal or a DC signal, the control signal **1795** generated by the capacitor **1796** is lower than the threshold voltage of the switch **1799** and so the switch **1799** are conducted. At this time, the switch terminals **1591** and **1592** are shorted to bypass the external circuit(s) connected in parallel with the switch circuit **1790***b*, such as at least one capacitor in the terminal adapter circuits those show in FIGS. **26**A-C.

[0409] When the signal received by the detection terminal **1593** and **1594** is a high frequency signal, the control signal **1795** generated by the capacitor **1796** is higher than the threshold voltage of the switch **1799** and so the switch **1799** are cut off. At this time, the high frequency signal is transmitted by the external circuit(s).

[0410] Hence, the ballast detection circuit **1790** can determine whether the input signal is a high frequency AC signal provided by an electric ballast. If yes, the high frequency AC signal is transmitted through the external circuit(s); if no, the input signal is transmitted through the switch circuit **1790***b*, bypassing the external circuit(s).

[0411] Next, exemplary embodiments of the conduction (bypass) and cut off (not bypass) operations of the switch circuit in the ballast detection circuit of an LED lamp will be illustrated. For example, the switch terminals **1591** and **1592** are coupled to a capacitor connected in series with the LED lamp, e.g., a signal for driving the LED lamp also flows through the capacitor. The capacitor may be disposed inside the LED lamp to be connected in series with internal circuit(s) or outside the LED lamp to be connected in series with the LED lamp. When the lamp driving circuit **505** exists, the lamp driving circuit **505** provides a high voltage and high frequency AC driving signal as an external driving signal to drive the LED tube lamp **500**. At this moment, the switch circuit of the ballast detection circuit is cut off, and so the capacitor is connected in series with an equivalent capacitor of the internal circuit(s) of the LED tube lamp for forming a capacitive voltage divider network. Thereby, a division voltage applied in the internal circuit(s) of the LED tube lamp is lower than the high voltage and high frequency AC driving signal, e.g.: the division voltage is in a range of 100-270V, and so no over voltage causes the internal circuit(s) damage. Alternatively, the switch terminals **1591** and **1592** is coupled to the capacitor (s) of the terminal adapter circuit shown in FIGS. **26**A-C to have the signal flowing through the half-wave node as well as the capacitor(s), e.g., the capacitor **642** in FIG. **26**A, or the capacitor **842** in FIG. **26**C. When the high voltage and high frequency AC signal generated by the lamp driving circuit **505** is input, the switch circuit is cut off and so the capacitive voltage divider is performed; and when the low frequency AC signal of the commercial power or the direct current of battery is input, the switch circuit bypasses the capacitor(s).

[0412] It is worth noting that the switch circuit may have plural switch units to have two or more switch terminals connecting in parallel with plural parallel-connected capaci-

tors (e.g., the capacitors **645** and **646** in FIG. **26**A, the capacitors **643**, **645** and **646** in FIG. **26**A, the capacitors **743** and **744** or/and the capacitors **745** and **746** in FIG. **26**B, the capacitors **843** and **844** in FIG. **26**C, the capacitors **845** and **846** in FIG. **26**C, the capacitors **842**, **843** and **844** in FIG. **26**C, the capacitors **842**, **845** and **846** in FIG. **26**C, and the capacitors **842**, **843**, **844**, **845** and **846** in FIG. **26**C) to achieve the effect of bypassing the plural capacitors equivalently serial-connected with the LED tube lamp.

[0413] In addition, the ballast detection circuit of the present invention can be used in conjunction with the mode switching circuits shown in FIGS. **32**A-**32**I. The switch circuit of the ballast detection circuit is replaced with the mode switching circuit. The detection circuit of the ballast detection circuit is coupled to one of the pins **501**, **502**, **503** and **504** for detecting the signal input into the LED lamp through the pins **501**, **502**, **503** and **504**. The detection circuit generates a control signal to control the mode switching circuit being at the first mode or the second mode according to whether the signal is a high frequency, low frequency or DC signal, i.e., the frequency of the signal.

[0414] For example, when the signal is a high frequency signal and higher than a defined mode switch frequency, such as the signal provided by the lamp driving circuit **505**, the control signal generated by the detection circuit makes the mode switching circuit be at the second mode for directly inputting the filtered signal into the LED module. When the signal is a low frequency signal or a direct signal and lower than the defined mode switch frequency, such as the signal provided by the commercial power or the battery, the control signal generated by the detection circuit makes the mode switching circuit be at the first mode for directly inputting the filtered signal into the driving circuit.

[0415] FIG. **38**A is a block diagram of a power supply module in an LED tube lamp according to an embodiment of the present invention. Compared to that shown in FIG. **35**A, the present embodiment comprises two rectifying circuits **510** and **540**, a filtering circuit **520**, an LED lighting module **530**, two filament-simulating circuits **1560**, and further comprises an auxiliary power module **2510**. The auxiliary power module **2510** is coupled between the filtering output terminals **521** and **522**. The auxiliary power module **2510** detects the filtered signal in the filtering output terminals **521** and **522**, and determines whether providing an auxiliary power to the filtering output terminals **521** and **522** based on the detected result. When the supply of the filtered signal is stopped or a logic level thereof is insufficient, i.e., when a drive voltage for the LED module is below a defined voltage, the auxiliary power module provides auxiliary power to keep the LED lighting module **530** continuing to emit light. The defined voltage is determined according to an auxiliary power voltage of the auxiliary power module **2510**. The filament-simulating circuits **1560** may be omitted and are therefore depicted by dotted lines.

[0416] FIG. **38**B is a block diagram of a power supply module in an LED tube lamp according to an embodiment of the present invention. Compared to that shown in FIG. **38**A, the present embodiment comprises two rectifying circuits **510** and **540**, a filtering circuit **520**, an LED lighting module **530**, two filament-simulating circuits **1560**, and an auxiliary power module **2510**, and the LED lighting module **530** further comprises a driving circuit **1530** and an LED module **630**. The auxiliary power module **2510** is coupled between the driving output terminals **1521** and **1522**. The auxiliary power module **2510** detects the driving signal in the driving output terminals **1521** and **1522**, and determines whether to provide an auxiliary power to the driving output terminals **1521** and **1522** based on the detected result. When the driving signal is no longer being supplied or a logic level thereof is insufficient, the auxiliary power module **2510** provides the auxiliary power to keep the LED module **630** continuously light. The filament-simulating circuits **1560** may be omitted and are therefore depicted by dotted lines.

[0417] FIG. **38**C is a schematic diagram of an auxiliary power module according to an embodiment of the present invention. The auxiliary power module **2610** comprises an energy storage unit **2613** and a voltage detection circuit **2614**. The auxiliary power module further comprises an auxiliary power positive terminal **2611** and an auxiliary power negative terminal **2612** for being respectively coupled to the filtering output terminals **521** and **522** or the driving output terminals **1521** and **1522**. The voltage detection circuit **2614** detects a logic level of a signal at the auxiliary power positive terminal **2611** and the auxiliary power negative terminal **2612** to determine whether releasing outward the power of the energy storage unit **2613** through the auxiliary power positive terminal **2611** and the auxiliary power negative terminal **2612**.

[0418] In the present embodiment, the energy storage unit **2613** is a battery or a supercapacitor. When a voltage difference of the auxiliary power positive terminal **2611** and the auxiliary power negative terminal **2612** (the drive voltage for the LED module) is higher than the auxiliary power voltage of the energy storage unit **2613**, the voltage detection circuit **2614** charges the energy storage unit **2613** by the signal in the auxiliary power positive terminal **2611** and the auxiliary power negative terminal **2612**. When the drive voltage is lower than the auxiliary power voltage, the energy storage unit **2613** releases the stored energy outward through the auxiliary power positive terminal **2611** and the auxiliary power negative terminal **2612**.

[0419] The voltage detection circuit **2614** comprises a diode **2615**, a bipolar junction transistor (BJT) **2616** and a resistor **2617**. A positive end of the diode **2615** is coupled to a positive end of the energy storage unit **2613** and a negative end of the diode **2615** is coupled to the auxiliary power positive terminal **2611**. The negative end of the energy storage unit **2613** is coupled to the auxiliary power negative terminal **2612**. A collector of the BJT **2616** is coupled to the auxiliary power positive terminal **2611**, and an emitter thereof is coupled to the positive end of the energy storage unit **2613**. One end of the resistor **2617** is coupled to the auxiliary power positive terminal **2611** and the other end is coupled to a base of the BJT **2616**. When the collector of the BJT **2616** is a cut-in voltage higher than the emitter thereof, the resistor **2617** conducts the BJT **2616**. When the power source provides power to the LED tube lamp normally, the energy storage unit **2613** is charged by the filtered signal through the filtering output terminals **521** and **522** and the conducted BJT **2616** or by the driving signal through the driving output terminals **1521** and **1522** and the conducted BJT **2616** until that the collector-emitter voltage of the BJT **2616** is lower than or equal to the cut-in voltage. When the filtered signal or the driving signal is no longer being supplied or the logic level thereof is insufficient, the energy storage unit **2613** provides power through the diode **2615** to keep the LED lighting module **530** or the LED module **630** continuously light.

[0420] It is worth noting that in some embodiments, the maximum voltage of the charged energy storage unit **2613** is

at least one cut-in voltage of the BJT **2616** lower than the voltage difference applied between the auxiliary power positive terminal **2611** and the auxiliary power negative terminal **2612**. The voltage difference provided between the auxiliary power positive terminal **2611** and the auxiliary power negative terminal **2612** is a turn-on voltage of the diode **2615** lower than the voltage of the energy storage unit **2613**. Hence, when the auxiliary power module **2610** provides power, the voltage applied at the LED module **630** is lower (about the sum of the cut-in voltage of the BJT **2616** and the turn-on voltage of the diode **2615**). In the embodiment shown in the FIG. **38**B, the brightness of the LED module **630** is reduced when the auxiliary power module supplies power thereto. Thereby, when the auxiliary power module is applied to an emergency lighting system or a constant lighting system, the user realizes the main power supply, such as commercial power, is abnormal and then performs necessary precautions therefor.

[0421] Referring to FIG. **39**A, a block diagram of an LED tube lamp including a power supply module in accordance with certain embodiments is illustrated. Compared to the LED lamp shown in FIG. **24**B, the LED tube lamp of FIG. **39**A comprises two rectifying circuits **510** and **540**, a filtering circuit **520**, and an LED lighting module **530**, and further comprises an installation detection module **2520**. The installation detection module **2520** is coupled to the rectifying circuit **510** (and/or the rectifying circuit **540**) via an installation detection terminal **2521** and is coupled to the filtering circuit **520** via an installation detection terminal **2522**. The installation detection module **2520** detects the signal passing through the installation detection terminals **2521** and **2522** and determines whether to cut off an LED driving signal (e.g., an external driving signal) passing through the LED tube lamp based on the detected result. The installation detection module includes circuitry configured to perform these steps, and thus may be referred to as an installation detection circuit, or more generally as a detection circuit or cut-off circuit. When an LED tube lamp is not yet installed on a lamp socket or holder, or in some cases if it is not installed properly or is only partly installed (e.g., one side is connected to a lamp socket, but not the other side yet), the installation detection module **2520** detects a smaller current and determines the signal is passing through a high impedance. In this case, in certain embodiments, the installation detection circuit **2520** is in a cut-off state to make the LED tube lamp stop working. Otherwise, the installation detection module **2520** determines that the LED tube lamp has already been installed on the lamp socket or holder, and it keeps on conducting to make the LED tube lamp working normally.

[0422] For example, in some embodiments, when a current passing through the installation detection terminals is greater than or equal to a specific, defined installation current (or a current value), which may indicate that the current supplied to the lighting module **530** is greater than or equal to a specific, defined operating current, the installation detection module is conductive to make the LED tube lamp operate in a conductive state. For example, a current greater than or equal to the specific current value may indicate that the LED tube lamp has correctly been installed in the lamp socket or holder. When the current passing through the installation detection terminals is smaller than the specific, defined installation current (or the current value), which may indicate that the current supplied to the lighting module **530** is less than a specific, defined operating current, the installation detection module cuts off current to make the LED tube lamp enter in a non-conducting state based on determining that the LED tube lamp has been not installed in, or does not properly connect to, the lamp socket or holder. In certain embodiments, the installation detection module **2520** determines conducting or cutting off based on the impedance detection to make the LED tube lamp operate in a conducting state or enter non-conducting state. The LED tube lamp operating in a conducting state may refer to the LED tube lamp including a sufficient current passing through the LED module to cause the LED light sources to emit light. The LED tube lamp operating in a cut-off state may refer to the LED tube lamp including an insufficient current or no current passing through the LED module so that the LED light sources do not emit light. Accordingly, the occurrence of electric shock caused by touching the conductive part of the LED tube lamp which is incorrectly installed on the lamp socket or holder can be better avoided.

[0423] Referring to FIG. **39**B, a block diagram of an installation detection module in accordance with certain embodiments is illustrated. The installation detection module includes a switch circuit **2580**, a detection pulse generating module **2540**, a detection result latching circuit **2560**, and a detection determining circuit **2570**. Certain of these circuits or modules may be referred to as first, second, third, etc., circuits as a naming convention to differentiate them from each other.

[0424] The detection determining circuit **2570** is coupled to and detects the signal between the installation detection terminals **2521** (through a switch circuit coupling terminal **2581** and the switch circuit **2580**) and **2522**. It is also coupled to the detection result latching circuit **2560** via a detection result terminal **2571** to transmit the detection result signal. The detection determining circuit **2570** may be configured to detect a current passing through terminals **2521** and **2522** (e.g., to detect whether the current is above or below a specific value).

[0425] The detection pulse generating module **2540** is coupled to the detection result latching circuit **2560** via a pulse signal output terminal **2541**, and generates a pulse signal to inform the detection result latching circuit **2560** of a time point for latching (storing) the detection result. For example, the detection pulse generating module **2540** may be a circuit configured to generate a signal that causes a latching circuit, such as the detection result latching circuit **2560** to enter and remain in a state that corresponds to one of a conducting state or a cut-off state for the LED tube lamp. The detection result latching circuit **2560** stores the detection result according to the detection result signal (or detection result signal and pulse signal), and transmits or provides the detection result to the switch circuit **2580** coupled to the detection result latching circuit **2560** via a detection result latching terminal **2561**. The switch circuit **2580** controls the state between conducting or cut off between the installation detection terminals **2521** and **2522** according to the detection result.

[0426] Referring to FIG. **39**C, a block diagram of a detection pulse generating module in accordance with certain embodiments is illustrated. A detection pulse generating module **2640** may be a circuit that includes multiple capacitors **2642**, **2645**, and **2646**, multiple resistors **2643**, **2647**, and **2648**, two buffers **2644**, and **2651**, an inverter **2650**, a diode **2649**, and an OR gate **2652**. With use or operation, the capacitor **2642** and the resistor **2643** connect in series between a driving voltage (e.g., a driving voltage source, which may be

a node of a power supply), such as VCC usually defined as a high logic level voltage, and a reference voltage (or potential), such as ground potential in this embodiment. The connection node between the capacitor **2642** and the resistor **2643** is coupled to an input terminal of the buffer **2644**. The resistor **2647** is coupled between the driving voltage, e.g., VCC, and an input terminal of the inverter **2650**. The resistor **2648** is coupled between an input terminal of the buffer **2651** and the reference voltage, e.g. ground potential in this embodiment. An anode of the diode **2649** is grounded and a cathode thereof is coupled to the input terminal of the buffer **2651**. First ends of the capacitors **2645** and **2646** are jointly coupled to an output terminal of the buffer **2644**, and second, opposite ends of the capacitors **2645** and **2646** are respectively coupled to the input terminal of the inverter **2650** and the input terminal of the buffer **2651**. An output terminal of the inverter **2650** and an output terminal of the buffer **2651** are coupled to two input terminals of the OR gate **2652**. According to certain embodiments, the voltage (or potential) for "high logic level" and "low logic level" mentioned in this specification are all relative to another voltage (or potential) or a certain reference voltage (or potential) in circuits, and further may be described as "logic high logic level" and "logic low logic level."

[0427] When an end cap of an LED tube lamp is inserted into a lamp socket and the other end cap thereof is electrically coupled to a human body, or when both end caps of the LED tube lamp are inserted into the lamp socket, the LED tube lamp is conductive with electricity. At this moment, the installation detection module enters a detection stage. The voltage on the connection node of the capacitor **2642** and the resistor **2643** is high initially (equals to the driving voltage, VCC) and decreases with time to zero finally. The input terminal of the buffer **2644** is coupled to the connection node of the capacitor **2642** and the resistor **2643**, so the buffer **2644** outputs a high logic level signal at the beginning and changes to output a low logic level signal when the voltage on the connection node of the capacitor **2642** and the resistor **2643** decreases to a low logic trigger logic level. As a result, the buffer **2644** is configured to produce an input pulse signal and then remain in a low logic level thereafter (stops outputting the input pulse signal.) The width for the input pulse signal may be described as equal to one (initial setting) time period, which is determined by the capacitance value of the capacitor **2642** and the resistance value of the resistor **2643**.

[0428] Next, the operations for the buffer **2644** to produce the pulse signal with the initial setting time period will be described below. Since the voltage on a first end of the capacitor **2645** and on a first end of the resistor **2647** is equal to the driving voltage VCC, the voltage on the connection node of both of them is also a high logic level. The first end of the resistor **2648** is grounded and the first end of the capacitor **2646** receives the pulse signal from the buffer **2644**, so the connection node of the capacitor **2646** and the resistor **2648** has a high logic level voltage at the beginning but this voltage decreases with time to zero (in the meantime, the capacitor stores the voltage being equal to or approaching the driving voltage VCC.) Accordingly, initially the inverter **2650** outputs a low logic level signal and the buffer **2651** outputs a high logic level signal, and hence the OR gate **2652** outputs a high logic level signal (a first pulse signal) at the pulse signal output terminal **2541**. At this moment, the detection result latching circuit **2560** stores the detection result for the first time according to the detection result signal and the pulse signal. During that initial pulse time period, detection pulse generating module **2540** outputs a high logic level signal, which results in the detection result latching circuit **2560** outputting the result of that high logic level signal.

[0429] When the voltage on the connection node of the capacitor **2646** and the resistor **2648** decreases to the low logic trigger logic level, the buffer **2651** changes to output a low logic level signal to make the OR gate **2652** output a low logic level signal at the pulse signal output terminal **2541** (stops outputting the first pulse signal.) The width of the first pulse signal output from the OR gate **2652** is determined by the capacitance value of the capacitor **2646** and the resistance value of the resistor **2648**.

[0430] The operation after the buffer **2644** stops outputting the pulse signal is described as below. For example, the operation may be initially in an operating stage. Since the capacitor **2646** stores the voltage being almost equal to the driving voltage VCC, and when the buffer **2644** instantaneously changes its output from a high logic level signal to a low logic level signal, the voltage on the connection node of the capacitor **2646** and the resistor **2648** is below zero but will be pulled up to zero by the diode **2649** rapidly charging the capacitor. Therefore, the buffer **2651** still outputs a low logic level signal.

[0431] On the other hand, when the buffer **2644** instantaneously changes its output from a high logic level signal to a low logic level signal, the voltage on the one end of the capacitor **2645** also changes from the driving voltage VCC to zero instantly. This makes the connection node of the capacitor **2645** and the resistor **2647** have a low logic level signal. At this moment, the output of the inverter **2650** changes to a high logic level signal to make the OR gate output a high logic level signal (a second pulse signal.) The detection result latching circuit **2560** stores the detection result for a second time according to the detection result signal and the pulse signal. Next, the driving voltage VCC charges the capacitor **2645** through the resistor **2647** to make the voltage on the connection node of the capacitor **2645** and the resistor **2647** increase with time to the driving voltage VCC. When the voltage on the connection node of the capacitor **2645** and the resistor **2647** increases to reach a high logic trigger logic level, the inverter **2650** outputs a low logic level signal again to make the OR gate **2652** stop outputting the second pulse signal. The width of the second pulse signal is determined by the capacitance value of the capacitor **2645** and the resistance value of the resistor **2647**.

[0432] As those mentioned above, in certain embodiments, the detection pulse generating module **2640** generates two high logic level pulse signals in the detection stage, which are the first pulse signal and the second pulse signal. These pulse signals are output from the pulse signal output terminal **2541**. Moreover, there is an interval with a defined time between the first and second pulse signals (e.g., an opposite-logic signal, which may have a low logic level when the pulse signals have a high logic level), and the defined time is determined by the capacitance value of the capacitor **2642** and the resistance value of the resistor **2643**).

[0433] From the detection stage entering the operating stage, the detection pulse generating module **2640** does not produce the pulse signal any more, and keeps the pulse signal output terminal **2541** on a low logic level potential. As described herein, the operating stage is the stage following the detection stage (e.g., following the time after the second pulse signal ends). The operating stage occurs when the LED tube lamp is at least partly connected to a power source, such

as provided in a lamp socket. For example, the operating stage may occur when part of the LED tube lamp, such as only one side of the LED tube lamp, is properly connected to one side of a lamp socket, and part of the LED tube lamp is either connected to a high impedance, such as a person, and/or is improperly connected to the other side of the lamp socket (e.g., is misaligned so that the metal contacts in the socket do not contact metal contacts in the LED tube lamp). The operating stage may also occur when the entire LED tube lamp is properly connected to the lamp socket.

[0434] Referring to FIG. **39**D, a detection determining circuit in accordance with certain embodiments is illustrated. An exemplary detection determining circuit **2670** includes a comparator **2671**, and a resistor **2672**. A negative input terminal of the comparator **2671** receives a reference logic level signal (or a reference voltage) Vref, a positive input terminal thereof is grounded through the resistor **2672** and is also coupled to a switch circuit coupling terminal **2581**. Referring to FIGS. **39**B and **39**D, the signal flowing into the switch circuit **2580** from the installation detection terminal **2521** outputs to the switch circuit coupling terminal **2581** to the resistor **2672**. When the current of the signal passing through the resistor **2672** reaches a certain level (for example, bigger than or equal to a defined current for installation, (e.g. 2 A) and this makes the voltage on the resistor **2672** higher than the reference voltage Vref (referring to two end caps inserted into the lamp socket,) the comparator **2671** produces a high logic level detection result signal and outputs it to the detection result terminal **2571**. For example, when an LED tube lamp is correctly installed on a lamp socket, the comparator **2671** outputs a high logic level detection result signal at the detection result terminal **2571**, whereas the comparator **2671** generates a low logic level detection result signal and outputs it to the detection result terminal **2571** when a current passing through the resistor **2672** is insufficient to make the voltage on the resistor **2672** higher than the reference voltage Vref (referring to only one end cap inserted into the lamp socket.) Therefore, in some embodiments, when the LED tube lamp is incorrectly installed on the lamp socket or one end cap thereof is inserted into the lamp socket but the other one is grounded by an object such as a human body, the current will be too small to make the comparator **2671** output a high logic level detection result signal to the detection result terminal **2571**.

[0435] Referring to FIG. **39**E, a schematic detection result latching circuit according to some embodiments of the present invention is illustrated. A detection result latching circuit **2660** includes a D flip-flop **2661**, a resistor **2662**, and an OR gate **2663**. The D flip-flop **2661** has a CLK input terminal coupled to a detection result terminal **2571**, and a D input terminal coupled to a driving voltage VCC. When the detection result terminal **2571** first outputs a low logic level detection result signal, the D flip-flop **2661** initially outputs a low logic level signal at a Q output terminal thereof, but the D flip-flop **2661** outputs a high logic level signal at the Q output terminal thereof when the detection result terminal **2571** outputs a high logic level detection result signal. The resistor **2662** is coupled between the Q output terminal of the D flip-flop **2661** and a reference voltage, such as ground potential. When the OR gate **2663** receives the first or second pulse signals from the pulse signal output terminal **2541** or receives a high logic level signal from the Q output terminal of the D flip-flop **2661**, the OR gate **2663** outputs a high logic level detection result latching signal at a detection result latching terminal **2561**. The detection pulse generating module **2640** only in the detection stage outputs the first and the second pulse signals to make the OR gate **2663** output the high logic level detection result latching signal, and thus the D flip-flop **2661** decides the detection result latching signal to be the high logic level or the low logic level the rest of the time, e.g. including the operating stage after the detection stage. Accordingly, when the detection result terminal **2571** has no high logic level detection result signal, the D flip-flop **2661** keeps a low logic level signal at the Q output terminal to make the detection result latching terminal **2561** also keep a low logic level detection result latching signal in the detection stage. On the contrary, once the detection result terminal **2571** has a high logic level detection result signal, the D flip-flop **2661** outputs and keeps a high logic level signal (e.g., based on VCC) at the Q output terminal. In this way, the detection result latching terminal **2561** keeps a high logic level detection result latching signal in the operating stage as well.

[0436] Referring to FIG. **39**F, a schematic switch circuit according to some embodiments is illustrated. A switch circuit **2680** includes a transistor, such as a bipolar junction transistor (BJT) **2681**, as being a power transistor, which has the ability of dealing with high current/power and is suitable for the switch circuit. The BJT **2681** has a collector coupled to an installation detection terminal **2521**, a base coupled to a detection result latching terminal **2561**, and an emitter coupled to a switch circuit coupling terminal **2581**. When the detection pulse generating module **2640** produces the first and second pulse signals, the BJT **2681** is in a transient conduction state. This allows the detection determining circuit **2670** to perform the detection for determining the detection result latching signal to be a high logic level or a low logic level. When the detection result latching circuit **2660** outputs a high logic level detection result latching signal at the detection result latching terminal **2561**, the BJT **2681** is in the conducting state to make the installation detection terminals **2521** and **2522** conducting. In contrast, when the detection result latching circuit **2660** outputs a low logic level detection result latching signal at the detection result latching terminal **2561** and the output from detection pulse generating module **2640** is a low logic level, the BJT **2681** is cut-off or in the blocking state to make the installation detection terminals **2521** and **2522** cut-off or blocking.

[0437] Since the external driving signal is an AC signal and in order to avoid the detection error resulting from the logic level of the external driving signal being just around zero when the detection determining circuit **2670** detects, the detection pulse generating module **2640** generates the first and second pulse signals to let the detection determining circuit **2670** perform two detections. So the issue of the logic level of the external driving signal being just around zero in a single detection can be avoided. In some cases, the time difference between the productions of the first and second pulse signals is not multiple times of half one cycle of the external driving signal. For example, it does not correspond to the multiple phase differences of 180 degrees of the external driving signal. In this way, when one of the first and second pulse signals is generated and unfortunately the external driving signal is around zero, it can be avoided that the external driving signal is again around zero when the other pulse signal is generated.

[0438] The time difference between the productions of the first and second pulse signals, for example, an interval with a defined time between both of them can be represented as following:

$$\text{the interval}=(X+Y)(T/2),$$

[0439] where T represents the cycle of an external driving signal, X is a natural number, 0<Y<1, with Y in some embodiments in the range of 0.05-0.95, and in some embodiments in the range of 0.15-0.85.

[0440] Furthermore, in order to avoid the installation detection module entering the detection stage from misjudgment resulting from the logic level of the driving voltage VCC being too small, the first pulse signal can be set to be produced when the driving voltage VCC reaches or is higher than a defined logic level. For example, in some embodiments, the detection determining circuit **2670** works after the driving voltage VCC reaching a high enough logic level in order to prevent the installation detection module from misjudgment due to an insufficient logic level.

[0441] According to the examples mentioned above, when one end cap of an LED tube lamp is inserted into a lamp socket and the other one floats or electrically couples to a human body or other grounded object, the detection determining circuit outputs a low logic level detection result signal because of high impedance. The detection result latching circuit stores the low logic level detection result signal based on the pulse signal of the detection pulse generating module, making it as the low logic level detection result latching signal, and keeps the detection result in the operating stage, without changing the logic value. In this way, the switch circuit keeps cutting-off or blocking instead of conducting continually. And further, the electric shock situation can be prevented and the requirement of safety standard can also be met. On the other hand, when two end caps of the LED tube lamp are correctly inserted into the lamp socket, the detection determining circuit outputs a high logic level detection result signal because the impedance of the circuit for the LED tube lamp itself is small. The detection result latching circuit stores the high logic level detection result signal based on the pulse signal of the detection pulse generating module, making it as the high logic level detection result latching signal, and keeps the detection result in the operating stage. So the switch circuit keeps conducting to make the LED tube lamp work normally in the operating stage.

[0442] In some embodiments, when one end cap of the LED tube lamp is inserted into the lamp socket and the other one floats or electrically couples to a human body, the detection determining circuit outputs a low logic level detection result signal to the detection result latching circuit, and then the detection pulse generating module outputs a low logic level signal to the detection result latching circuit to make the detection result latching circuit output a low logic level detection result latching signal to make the switch circuit cutting-off or blocking. As such, the switch circuit blocking makes the installation detection terminals, e.g. the first and second installation detection terminals, blocking. As a result, the LED tube lamp is in non-conducting or blocking state.

[0443] However, in some embodiments, when two end caps of the LED tube lamp are correctly inserted into the lamp socket, the detection determining circuit outputs a high logic level detection result signal to the detection result latching circuit to make the detection result latching circuit output a high logic level detection result latching signal to make the switch circuit conducting. As such, the switch circuit conducting makes the installation detection terminals, e.g. the first and second installation detection terminals, conducting. As a result, the LED tube lamp operates in a conducting state.

[0444] Thus, according to the operation of the installation detection module, a first circuit, upon connection of at least one end of the LED tube lamp to a lamp socket, generates and outputs two pulses, each having a pulse width, with a time period between the pulses. The first circuit may include various of the elements described above configured to output the pulses to a base of a transistor (e.g., a BJT transistor) that serves as a switch. The pulses occur during a detection stage for detecting whether the LED tube lamp is properly connected to a lamp socket. The timing of the pulses may be controlled based on the timing of various parts of the first circuit changing from high to low logic levels, or vice versa.

[0445] The pulses can be timed such that, during that detection stage time, if the LED tube lamp is properly connected to the lamp socket (e.g., both ends of the LED tube lamp are correctly connected to conductive terminals of the lamp socket), at least one of the pulse signals occurs when an AC current from a driving signal is at a non-zero level. For example, the pulse signals can occur at intervals that are different from half of the period of the AC signal. For example, respective start points or mid points of the pulse signals, or a time between an end of the first pulse signal and a beginning of the second pulse signal may be separated by an amount of time that is different from half of the period of the AC signal (e.g., it may be between 0.05 and 0.95 percent of a multiple of half of the period of the AC signal). During a pulse that occurs when the AC signal is at a non-zero level, a switch that receives the AC signal at the non-zero level may be turned on, causing a latch circuit to change states such that the switch remains permanently on so long as the LED tube lamp remains properly connected to the lamp socket. For example, the switch may be configured to turn on when each pulse is output from the first circuit. The latch circuit may be configured to change state only when the switch is on and the current output from the switch is above a threshold value, which may indicate a proper connection to a light socket. As a result, the LED tube lamp operates in a conducting state.

[0446] On the other hand, if both pulses occur when a driving signal at the LED tube lamp has a near-zero current level, or a current level below a particular threshold, then the state of the latch circuit is not changed, and so the switch is only on during the two pulses, but then remains permanently off after the pulses and after the detection mode is over. For example, the latch circuit can be configured to remain in its present state if the current output from the switch is below the threshold value. In this manner, the LED tube lamp remains in a non-conducting state, which prevents electric shock, even though part of the LED tube lamp is connected to an electrical power source.

[0447] It is worth noting that according to certain embodiments, the width of the pulse signal generated by the detection pulse generating module is between 10 μs to 1 ms, and it is used to make the switch circuit conducting for a short period when the LED tube lamp conducts instantaneously. In some embodiments, a pulse current is generated to pass through the detection determining circuit for detecting and determining. Since the pulse is for a short time and not for a long time, the electric shock situation will not occur. Furthermore, the detection result latching circuit also keeps the detection result during the operating stage (e.g., the operating stage being the period after the detection stage and during which part of the LED tube lamp is still connected to a power source), and no longer changes the detection result stored previously complying with the circuit state changing. A situation resulting from

changing the detection result can thus be avoided. In some embodiments, the installation detection module, such as the switch circuit, the detection pulse generating module, the detection result latching circuit, and the detection determining circuit, could be integrated into a chip and then embedded in circuits for saving the circuit cost and layout space.

[0448] As discussed in the above examples, in some embodiments, an LED tube lamp includes an installation detection circuit comprising a first circuit configured to output two pulse signals, the first pulse signal output at a first time and the second pulse signal output at a second time after the first time, and a switch configured to receive an LED driving signal and to receive the two pulse signals, wherein the two pulse signals control turning on and off of the switch. The installation detection circuit may be configured to, during a detection stage, detect during each of the two pulse signals whether the LED tube lamp is properly connected to a lamp socket. When it is not detected during either pulse signal that the LED tube lamp is properly connected to the lamp socket, the switch may remain in an off state after the detection stage. When it is detected during at least one of the pulse signals that the LED tube lamp is properly connected to the lamp socket, the switch may remain in an on state after the detection stage. The two pulse signals may occur such that they are separated by a time different from a multiple of half of a period of the LED driving signal, and such that at least one of them does not occur when the LED driving signal has a current value of substantially zero. It should be noted that although a circuit for producing two pulse signals is described, the disclosure is not intended to be limiting as such. For example, a circuit may be implemented such that a plurality of pulse signals may occur, wherein at least two of the plurality of pulse signals are separated by a time different from a multiple of half of a period of the LED driving signal, and such that at least one of the plurality of pulse signals does not occur when the LED driving signal has a current value of substantially zero.

[0449] For example, according to the design of the power supply in some embodiments, the circuit board assembly has a long circuit sheet and a short circuit board that are adhered to each other with the short circuit board being adjacent to the side edge of the long circuit sheet. The short circuit board may be provided with power supply module to form the power supply, and may include the installation detection module.

[0450] According to the design of the power supply module, the external driving signal may be a low frequency AC signal (e.g., commercial power), a high frequency AC signal (e.g., that provided by an electronic ballast), or a DC signal (e.g., that provided by a battery or external configured driving source), input into the LED tube lamp through a drive architecture of dual-end power supply. For the drive architecture of dual-end power supply, the external driving signal may be input by using only one end thereof as single-end power supply.

[0451] The LED tube lamp may omit the rectifying circuit in the power supply module when the external driving signal is a DC signal.

[0452] According to the design of the rectifying circuit in the power supply module, there may be a dual rectifying circuit. First and second rectifying circuits of the dual rectifying circuit are respectively coupled to the two end caps disposed on two ends of the LED tube lamp. The dual rectifying circuit is applicable to the drive architecture of dual-end power supply. Furthermore, the LED tube lamp having at least one rectifying circuit is applicable to the drive architecture of a low frequency AC signal, high frequency AC signal or DC signal.

[0453] The dual rectifying circuit may comprise, for example, two half-wave rectifier circuits, two full-wave bridge rectifying circuits or one half-wave rectifier circuit and one full-wave bridge rectifying circuit.

[0454] According to the design of the pin in the LED tube lamp, there may be two pins in single end (the other end has no pin), two pins in corresponding ends of two ends, or four pins in corresponding ends of two ends. The designs of two pins in single end and two pins in corresponding ends of two ends are applicable to a signal rectifying circuit design of the rectifying circuit. The design of four pins in corresponding ends of two ends is applicable to a dual rectifying circuit design of the rectifying circuit, and the external driving signal can be received by two pins in only one end or any pin in each of two ends.

[0455] According to the design of the filtering circuit of the power supply module, there may be a single capacitor, or π filter circuit. The filtering circuit filers the high frequency component of the rectified signal for providing a DC signal with a low ripple voltage as the filtered signal. The filtering circuit also further comprises the LC filtering circuit having a high impedance for a specific frequency for conforming to current limitations in specific frequencies of the UL standard. Moreover, the filtering circuit according to some embodiments further comprises a filtering unit coupled between a rectifying circuit and the pin(s) for reducing the EMI resulted from the circuit(s) of the LED tube lamp. The LED tube lamp may omit the filtering circuit in the power supply module when the external driving signal is a DC signal.

[0456] According to the design of the LED lighting module in some embodiments, the LED lighting module may comprise the LED module and the driving circuit or only the LED module. The LED module may be connected with a voltage stabilization circuit in parallel for preventing the LED module from over voltage. The voltage stabilization circuit may be a voltage clamping circuit, such as zener diode, DIAC and so on. When the rectifying circuit has a capacitive circuit, in some embodiments, two capacitors are respectively coupled between two corresponding pins in two end caps and so the two capacitors and the capacitive circuit as a voltage stabilization circuit perform a capacitive voltage divider.

[0457] If there are only the LED module in the LED lighting module and the external driving signal is a high frequency AC signal, a capacitive circuit (e.g., having at least one capacitor) is in at least one rectifying circuit and the capacitive circuit is connected in series with a half-wave rectifier circuit or a full-wave bridge rectifying circuit of the rectifying circuit and serves as a current modulation circuit (or a current regulator) to modulate or to regulate the current of the LED module due to that the capacitor equates a resistor for a high frequency signal. Thereby, even different ballasts provide high frequency signals with different voltage logic levels, the current of the LED module can be modulated into a defined current range for preventing overcurrent. In addition, an energy-releasing circuit is connected in parallel with the LED module. When the external driving signal is no longer supplied, the energy-releasing circuit releases the energy stored in the filtering circuit to lower a resonance effect of the filtering circuit and other circuits for restraining the flicker of the

LED module. In some embodiments, if there are the LED module and the driving circuit in the LED lighting module, the driving circuit may be a buck converter, a boost converter, or a buck-boost converter. The driving circuit stabilizes the current of the LED module at a defined current value, and the defined current value may be modulated based on the external driving signal. For example, the defined current value may be increased with the increasing of the logic level of the external driving signal and reduced with the reducing of the logic level of the external driving signal. Moreover, a mode switching circuit may be added between the LED module and the driving circuit for switching the current from the filtering circuit directly or through the driving circuit inputting into the LED module.

[0458] A protection circuit may be additionally added to protect the LED module. The protection circuit detects the current and/or the voltage of the LED module to determine whether to enable corresponding over current and/or over voltage protection.

[0459] According to the design of the ballast detection circuit of the power supply module, the ballast detection circuit is substantially connected in parallel with a capacitor connected in series with the LED module and determines the external driving signal whether flowing through the capacitor or the ballast detection circuit (i.e., bypassing the capacitor) based on the frequency of the external driving signal. The capacitor may be a capacitive circuit in the rectifying circuit.

[0460] According to the design of the filament-simulating circuit of the power supply module, there may be a single set of a parallel-connected capacitor and resistor, two serially connected sets, each having a parallel-connected capacitor and resistor, or a negative temperature coefficient circuit. The filament-simulating circuit is applicable to program-start ballast for avoiding the program-start ballast determining the filament abnormally, and so the compatibility of the LED tube lamp with program-start ballast is enhanced. Furthermore, the filament-simulating circuit almost does not affect the compatibilities for other ballasts, e.g., instant-start and rapid-start ballasts.

[0461] According to the design of the ballast-compatible circuit of the power supply module in some embodiments, the ballast-compatible circuit can be connected in series with the rectifying circuit or connected in parallel with the filtering circuit and the LED lighting module. Under the design of being connected in series with the rectifying circuit, the ballast-compatible circuit is initially in a cutoff state and then changes to a conducting state in an objective delay. Under the design of being connected in parallel with the filtering circuit and the LED lighting module, the ballast-compatible circuit is initially in a conducting state and then changes to a cutoff state in an objective delay. The ballast-compatible circuit makes the electronic ballast really activate during the starting stage and enhances the compatibility for instant-start ballast. Furthermore, the ballast-compatible circuit almost does not affect the compatibilities with other ballasts, e.g., program-start and rapid-start ballasts.

[0462] According to the design of the auxiliary power module of the power supply module, the energy storage unit may be a battery or a supercapacitor, connected in parallel with the LED module. The auxiliary power module is applicable to the LED lighting module having the driving circuit.

[0463] According to the design of the LED module of the power supply module, the LED module comprises plural strings of LEDs connected in parallel with each other, wherein each LED may have a single LED chip or plural LED chips emitting different spectrums. Each LEDs in different LED strings may be connected with each other to form a mesh connection.

[0464] In other words, the abovementioned features can be implemented in any combination to improve the LED tube lamp.

[0465] As shown in FIG. **19**, in some embodiments, the LED light strip **2** and the power supply **5** may be connected by utilizing the circuit board assembly **25** instead of soldering bonding. The long circuit sheet **251** and the short circuit board **253** are adhered to each other with the short circuit board **253** being adjacent to the side edge of the long circuit sheet **251**. And then, the power supply module **250** is electrically connected to the wiring layer **2***a* of the LED light strip **2**. Besides, the LED light strip **2** as mentioned before is not limited to one-layered or two-layered circuit board, and it could be the circuit board shown in FIG. **23** further including another wiring layer **2***c*. The LED light source **202** is configured on the wiring layer **2***a* and electrically connected to the power supply **5** through the wiring layer **2***a*. As shown in FIG. **20**, in some embodiments, the circuit board assembly **25** has the long circuit sheet **251** and the short circuit board **253**, and the long circuit sheet **251** could be the bendable circuit sheet of the LED light strip **2** including the wiring layer **2***a* and the dielectric layer **2***b*. The dielectric layer **2***b* and the short circuit board **253** are fixed by a joint manner, and then the wiring layer **2***a* is adhered to the dielectric layer **2***b* and extends to the short circuit board **253**. The embodiments mentioned above do not depart from the scope of and are all included in the applications of the circuit board assembly **25** of the present invention.

[0466] In the embodiments mentioned above, the short circuit board **253** may have a length generally of about 15 mm to about 40 mm and may be about 19 mm to about 36 mm, while the long circuit sheet **251** may have a length generally of about 800 mm to about 2800 mm and may be about 1200 mm to about 2400 mm. In some embodiments, a ratio of the length of the short circuit board **253** to the length of the long circuit sheet **251** ranges from about 1:20 to about 1:200.

[0467] In addition, in some abovementioned embodiments, when the LED light strip **2** and the power supply **5** are fixed by soldering bonding but the LED light strip **2** is not mounted onto the inner circumferential surface of the LED tube lamp **1**, the LED light strip **2** may not safely fix and support the power supply **5**. Moreover, in some embodiments, when the power supply **5** has to be fixed in the end cap of the end region of the LED tube lamp **1**, the end cap would be relatively longer and then reduces the effectively emitting area of the LED tube lamp **1**.

[0468] Referring to FIG. **22**, in some embodiments, the LED light strip **2** adopts a hard circuit board **22** made of aluminum and the end thereof can be relatively fixed onto the end region of the LED tube lamp **1**. Furthermore, for the sake of the implementation of soldering bonding and the length of the end cap **3** being able to be reduced since it is no longer required to have enough space to contain the entire length of the power supply **5**, the power supply **5** is perpendicularly adhered to the hard circuit board **22** made of aluminum via soldering. By doing so, the effectively emitting area of the LED tube lamp **1** increases. Also, in the abovementioned embodiments, the power supply **5** solders a metal wire for electrically connecting to the conductive pin **301** of the end cap **3** in addition to configuring the power supply module **250**.

In some embodiments, the conductive lead **53** of the power supply module **250** on the power supply **5** could be directly used to electrically connect to the end cap **3**, and the metal wire mentioned above is unnecessary any more so as to simplify the manufacture process.

[0469] In the embodiments of the present invention, a safety switch is configured in the end cap for preventing leakage current and it connects the conductive pin **301** to the power supply. When the LED tube lamp is correctly installed into the lamp socket, the safety switch is just triggered (the power supply being electrically connected to the conductive pin **301**). In this way, the end cap does not conduct electricity before the LED tube lamp is correctly installed into the lamp socket. And this provides the safety protection to the user for preventing the user from electric shock in case that one end of the LED tube lamp is inserted into the lamp socket but the other end is touched by the user's hand. In some embodiments of the present invention, the safety switch is a logic level switch triggered only through the LED tube lamp being correctly installed. And when the logic level switch is triggered (liquid flows to a preset position), the LED tube lamp works normally.

[0470] In some embodiments, two safety switches are respectively configured into the end caps on both ends of the LED tube lamp. Or, only one safety switch is configured with, in this case, the end cap configured with the safety switch may be marked for reminding the user of firstly installing another unmarked end cap.

[0471] Referring to FIG. **41**, a schematic structure of an LED tube lamp according to some embodiments of the present invention is illustrated. An LED tube lamp **100** includes a lamp tube **1** and two end caps **3** (the proportion of the end cap **3** in relation to the lamp tube **1** schematized in FIG. **41** is exaggerated in order to highlight the structure of the end cap **3**. In an embodiment, the depth of the end cap **3** is from 9 to 70 mm. The axial length of the lamp tube **1** is from 254 to 2000 mm, that is, from 1 inch to 8 inches.) The end caps **3** are respectively configured at the both ends of the lamp tube **1**. The end cap **3** includes an electrically conductive pin **301**, an actuator **332**, a micro switch **334**, and a power supply **5**. When the LED tube lamp **100** is correctly installed into the lamp socket (not shown), the actuator **332** triggers the micro switch **334** for allowing the power supply **5** to electrically connect to commercial electricity so as to light up the LED components (not shown) in the LED tube lamp **100**.

[0472] For one of the variations of the micro switch mentioned above, as shown in FIG. **42**, an input terminal **3341** and an output terminal **3343** are electrically connected to a hollow conductive pin (not shown) and a power supply **5** (not shown), correspondingly. A bidirectional triode thyristor (TRIAC) **3345** is configured between the input terminal **3341** and the output terminal **3343**, a resistor **3347** is electrically coupled to a a1 end of the micro switch **334** having a a2 end electrically coupled to a trigger terminal of the TRIAC **3345**. In one embodiment, the resistance of the resistor **3347** is from 1 Ohm to 10K Ohm, and in some cases, about 2K Ohm. The current passing through the micro switch **334** decreases from 10 A before deformation to about 0.1 A. Accordingly, a wider range is provided for selecting the micro switch and the cost is further down.

[0473] The safety switch could replace the resistor **3347** with a silicon controlled rectifier, SCR; i.e., the safety switch includes the SCR, the TRIAC **3345**, and the micro switch **334**, and wherein the micro switch **334** could be any micro switch in the embodiments mentioned above. In one embodiment, the input terminal **3341** of the safety switch is electrically connected to any hollow conductive pin (not shown) of the LED tube lamp, and the output terminal **3343** thereof is electrically connected to the power supply **5**. The both ends of the TRIAC **3345** are electrically coupled to the input terminal **3341** and the output terminal **3343**, respectively. Further, the SCR is electrically coupled to the micro switch **334** in serial. One end of the serially connected SCR and the micro switch **334** is electrically coupled to the control terminal of the TRIAC **3345**, the other end of the serially connected SCR and the micro switch **334** is electrically coupled to the input terminal **3341**.

[0474] When the micro switch **334** opens, the control terminal of the TRIAC **3345** is not coupled to the input terminal **3341**. Meanwhile, the TRIAC **3345** is in a cutoff state so as to make the hollow conductive pin being uncoupled to the power supply **5**. When the micro switch **334** is triggered and shorted, the current is transmitted from the input terminal **3341**, the serially connected SCR and the micro switch **334** to the control terminal of the TRIAC **3345** to make the TRIAC **3345** being triggered and conducted. Therefore, the hollow conductive pin **301** is coupled to the power supply **5** to make the LED tube lamp working normally.

[0475] In the abovementioned embodiments with the safety switch by using the micro switch **334** only, an enormous transient current, such as bigger than 10 A, is inrushing to flow through the micro switch **334**, the power supply **5**, and the LED components when the micro switch **334** is instantly triggered. Therefore, not only does the micro switch **334** use a higher withstanding current, but the volume thereof also gets bigger. Further, the transient current may damage the power supply **5** and the LED components. However, in some embodiments, the transient current could be restrained by the SCR or the resistor **3347** so as to lower the withstanding current used by the micro switch **334**, and simultaneously, the volume of the micro switch **334** and the cost are both down. In this way, the current passing through the micro switch could be down to about 0.1 A.

[0476] Next, the structure of the end cap with safety switch will be described in more detail as below.

[0477] Turning to FIG. **40**A, in accordance with an exemplary embodiment of the present invention, the end cap **3** includes a housing **300**; a power supply (not shown); an electrically conductive pin **301** extending outwardly from a top wall of the housing **300**; an actuator **332** movably connected to the housing; and a micro switch **334**. The upper portion of the actuator **332** projects out of an opening formed in the top wall of the housing **300**. The actuator **332** includes, inside the housing **300**, a stopping flange **337** extending radially from its intermediary portion and a shaft **335** extending axially in its lower portion. The shaft **335** is movably connected to a base **336** rigidly mounted inside the housing **300**. A preloaded coil spring **333** is retained, around the shaft **335**, between the stopping flange **337** and the base **336**. An aperture is provided in the upper portion of the actuator **332** through which the electrically conductive pin **301** is arranged. The micro switch **334** is positioned inside the housing **300** to be actuated by the shaft **335** at a predetermined actuation point. The micro switch **334**, when actuated, makes the circuit, directly or through a relay, between the electrically connective pin **301** and the power supply **5**. The actuator **332** is aligned with the electrically conductive pin **301**, the opening in the top wall of the housing **300** and the coil spring **333**

along the longitudinal axis of the lamp tube **1** to be reciprocally movable between the top wall of the housing **300** and the base **336**. When the electrically conductive pin **301** is unplugged from the socket, the coil spring **333** biases the actuator **332** to its rest position until the stopping flange **337** is urged against the top wall of the housing **300**. The micro switch **334** stays off and the circuit of the LED tube lamp stays open. When the electrically conductive pin **301** is duly plugged into the socket on a lamp holder, the actuator **332** is depressed and brings the shaft **335** to the actuation point. The micro switch **334** is turned on to, directly or through a relay, complete the circuit of the LED tube lamp.

[0478] In some embodiments, two end caps of the LED tube lamp according to the embodiments of the present invention may configure two micro switches, correspondingly. In this way, the hurt resulting from leaking current to the user can be avoided when the LED tube lamp is in installation.

[0479] When the LED tube lamp is not inserted the lamp socket, the actuator **333** moves forward outside of the housing **300** because of the tension of the coil spring **333**. Hence, the micro switch **334** opens to make the power supply **5** disconnect the conductive pin **301**.

[0480] Turning to FIG. **40**B, in accordance with an exemplary embodiment of the present invention, the end cap **3** includes a housing **300**; a power supply (not shown); an electrically conductive pin **301***a* extending outwardly from a top wall of the housing **300**; an actuator **332** movably connected to the housing; and a micro switch **334**. In an embodiment, the electrically conductive pin **301***a* is an enlarged hollow structure. The upper portion of the actuator **332** is bowl-shaped to receive the electrically conductive pin **301***a* and projects out of an opening formed in the top wall of the housing **300**. The actuator **332** includes, inside the housing **300**, a stopping flange **337** extending radially from its intermediary portion and, in its lower portion, a spring retainer and a bulging part **338**. A preloaded coil spring **333** is retained between the string retainer and a base **336** rigidly mounted inside the housing **300**. The micro switch **334** is positioned inside the housing **300** to be actuated by the bulging part **338** at a predetermined actuation point. The micro switch **334**, when actuated, makes the circuit, directly or through a relay, between the electrically conductive pin **301***a* and the power supply. The actuator **332** is aligned with the electrically conductive pin **301***a*, the opening in the top wall of the housing **300** and the coil spring **333** along the longitudinal axis of the lamp tube **1** to be reciprocally movable between the top wall of the housing **300** and the base **336**. When the electrically conductive pin **301***a* is unplugged from the socket of a lamp holder, the coil spring **333** biases the actuator **332** to its rest position until the stopping flange **337** is urged against the top wall of the housing **300**. The micro switch **334** stays off and the circuit of the LED tube lamp **1** stays open. When the electrically conductive pin **301***a* is duly plugged into the socket on the lamp holder, the actuator **332** is depressed and brings the bulging part **338** to the actuation point. The micro switch **334** is turned on to, directly or through a relay, complete the circuit.

[0481] In some embodiments, two end caps of the LED tube lamp according to the embodiments of the present invention may configure two micro switches, correspondingly. In some embodiments, the actuator **332** is intermittently put around the conductive pin **301***a*.

[0482] When the LED tube lamp is not inserted the lamp socket, the actuator **333** moves forward outside of the housing **300** because of the tension of the coil spring **333**. Hence, the micro switch **334** opens to make the power supply **5** disconnect the conductive pin **301***a*.

[0483] Turning to FIG. **40**C, in accordance with an exemplary embodiment of the present invention, the end cap **3** includes a housing **300**; a power supply (not shown); an electrically conductive pin **301** extending outwardly from a top wall of the housing **300**; an actuator **332** movably connected to the housing; and a micro switch **334**. In an embodiment, the end cap includes a pair of electrically conductive pins **301**. The upper portion of the actuator **332** projects out of an opening formed in the top wall of the housing **300**. The actuator **332** includes, inside the housing **300**, a stopping flange **337** extending radially from its intermediary portion and a spring retainer in its lower portion. A first coil spring **333***a*, preloaded, is retained between the string retainer and a first end of the micro switch **334**. A second coil spring **333***b*, also preloaded, is retained between a second end of the micro switch **334** and a base rigidly mounted inside the housing. Both of the springs **333***a*, **333***b* are chosen to respond to a gentle depression; however, the first coil spring **333***a* is chosen to have a different stiffness than the second coil spring **333***b*. In some embodiments, the first coil spring **333***a* reacts to a depression of from 0.5 to 1 N but the second coil spring **333***b* reacts to a depression of from 3 to 4 N. The actuator **332** is aligned with the opening in the top wall of the housing **300**, the micro switch **334** and the set of coil springs **333***a*, **333***b* along the longitudinal axis of the lamp tube to be reciprocally movable between the top wall of the housing **300** and the base. The micro switch **334**, sandwiched between the first coil spring **333***a* and the second coil spring **333***b*, is actuated when the first coil spring **333***a* is compressed to a predetermined actuation point. The micro switch **334**, when actuated, makes the circuit, directly or through a relay, between the pair of electrically conductive pins **301** and the power supply. When the pair of electrically conductive pins **301** are unplugged from the socket on a lamp holder, the pair of coil springs **333***a*, **333***b* bias the actuator **332** to its rest position until the stopping flange **337** is urged against the top wall of the housing **300**. The micro switch **334** stays off and the circuit of the LED tube lamp stays open. When the pair of electrically conductive pins **301** are duly plugged into the socket on a lamp holder, the actuator **332** is depressed and compresses the first coil spring **333***a* to the actuation point. The micro switch **334** is turned on to, directly or through a relay, complete the circuit.

[0484] In some embodiments, two end caps of the LED tube lamp according to the embodiments of the present invention may configure two micro switches, correspondingly. In this way, the hurt resulting from leaking current to the user can be avoided when the LED tube lamp is in installation. Since the LED tube lamp has correctly been installed and the micro switch has been actuated, the connection between the conductive pin **301** and the power supply is just implemented.

[0485] When the LED tube lamp is not inserted the lamp socket, the actuator **333** moves forward outside of the housing **300** because of the tension of the coil spring **333**. Hence, the micro switch **334** opens to make the power supply **5** disconnect the conductive pin **301***a*.

[0486] Turning to FIG. **40**D, in accordance with an exemplary embodiment of the present invention, the end cap **3** includes a housing **300**; a power supply (not shown); an electrically conductive pin **301** extending outwardly from a top wall of the housing **300**; an actuator **332** movably con-

nected to the housing; a first contact element **334***a*; and a second contact element **338**. The upper portion of the actuator **332** projects out of an opening formed in the top wall of the housing **300**. The actuator **332** includes, inside the housing **300**, a stopping flange extending radially from its intermediary portion and a shaft **335** extending axially in its lower portion. The shaft **335** is movably connected to a base **336** rigidly mounted inside the housing **300**. A preloaded coil spring **333** is retained, around the shaft **335**, between the stopping flange and the base **336**. An aperture is provided in the upper portion of the actuator **332** through which the electrically conductive pin **301** is arranged. The actuator **332** is aligned with the electrically conductive pin **301**, the opening in the top wall of the housing **300**, the coil spring **333** and the first and second contact elements **334***a*, **338** along the longitudinal axis of the lamp tube to be reciprocally movable between the top wall of the housing **300** and the base **336**. The first contact element **334***a* includes a plurality of metallic pieces, which are spaced apart from one another, and is configured to form a flexible female-type receptacle, e.g. V-shaped or bell-shaped. The first contact element **334***a* is made from copper or copper alloy. The second contact element **338** is positioned on the shaft **335** to, when the shaft **335** moves downwards, come into the first contact element **334***a* and electrically connect the plurality of metallic pieces at a predetermined actuation point. The first contact element **334***a* is configured to impart a spring-like bias on the second contact element **338** when the second contact element **338** goes into the first contact element **334***a* to ensure faithful electrical connection with one another. The first and second contact elements **334***a*, **338** are made from, in some embodiments, copper alloy. When the electrically conductive pin **301** is unplugged from the socket, the coil spring **333** biases the actuator **332** to its rest position until the stopping flange is urged against the top wall of the housing **300**. The first and second contact elements **334***a*, **338** stay unconnected and the circuit of the LED tube lamp stays open. When the electrically conductive pin **301** is duly plugged into the socket on a lamp holder, the actuator **332** is depressed and brings the second contact element **338** to the actuation point. The first and second contact elements **334***a*, **338** are connected to, directly or through a relay, complete the circuit of the LED tube lamp.

[0487] In some embodiments, two end caps of the LED tube lamp according to the embodiments of the present invention may configure two micro switches, correspondingly. In this way, the hurt resulting from leaking current to the user can be avoided when the LED tube lamp is in installation.

[0488] When the LED tube lamp is not inserted the lamp socket, the actuator **333** moves forward outside of the housing **300** because of the tension of the coil spring **333**. Hence, the micro switch **334** opens to make the power supply **5** disconnect the conductive pin **301***a*.

[0489] Turning to FIG. **40**E, in accordance with an exemplary embodiment of the present invention, the end cap **3** includes a housing **300**; a power supply (not shown); an electrically conductive pin **301** extending outwardly from a top wall of the housing **300**; an actuator **332** movably connected to the housing; a first contact element **334***a*; and a second contact element. The upper portion of the actuator **332** projects out of an opening formed in the top wall of the housing **300**. The actuator **332** includes, inside the housing **300**, a stopping flange extending radially from its intermediary portion and a shaft **335** extending axially in its lower portion. The shaft **335** is movably connected to a base rigidly mounted inside the housing **300**. A preloaded coil spring **333** is retained, around the shaft **335**, between the stopping flange and the base. The actuator **332** is aligned with the electrically conductive pin **301**, the opening in the top wall of the housing **300**, the coil spring **333**, the first contact element **334***a* and the second contact element along the longitudinal axis of the lamp tube to be reciprocally movable between the top wall of the housing **300** and the base. In some embodiments, the first contact element **334***a* forms an integral and flexible female-type receptacle and is made from, copper, copper alloy or both. The second contact element, made from, copper, copper alloy or both, is fixedly disposed inside the housing **300**. In an embodiment, the second contact element is fixedly disposed on the power supply **5**. The first contact element **334***a* is attached to the lower end of the shaft **335** to, when the shaft **335** moves downwards, receive and electrically connect the second contact element at a predetermined actuation point. The first contact element **334***a* is configured to impart a spring-like bias on the second contact element when the former receives the latter to ensure faithful electrical connection with each other. When the electrically conductive pin **301** is unplugged from the socket on a lamp holder, the coil spring **333** biases the actuator **332** to its rest position until the stopping flange is urged against the top wall of the housing **300**. The first contact element **334***a* and the second contact element stay unconnected and the circuit of the LED tube lamp stays open. When the electrically conductive pin **301** is duly plugged into the socket, the actuator **332** is depressed and brings the first contact element **334***a* to the actuation point. The first contact element **334***a* and the second contact element are connected to, directly or through a relay, complete the circuit of the LED tube lamp.

[0490] In some embodiments, two end caps of the LED tube lamp according to the embodiments of the present invention may configure two micro switches, correspondingly. In this way, the hurt resulting from leaking current to the user can be avoided when the LED tube lamp is in installation.

[0491] Turning to FIG. **40**F, in accordance with an exemplary embodiment of the present invention, the end cap **3** includes a housing **300**; a power supply (not shown); an electrically conductive pin **301** extending outwardly from a top wall of the housing **300**; an actuator **332** movably connected to the housing; a first contact element; and a second contact element. The upper portion of the actuator **332** projects out of an opening formed in the top wall of the housing **300**. The actuator **332** includes, inside the housing **300**, a stopping flange extending radially from its intermediary portion and a shaft **335** extending axially in its lower portion. The shaft **335** is movably connected to a base rigidly mounted inside the housing **300**. A preloaded coil spring **333** is retained, around the shaft **335**, between the stopping flange and the base. The actuator **332** is aligned with the electrically conductive pin **301**, the opening in the top wall of the housing **300**, the coil spring **333**, the first contact element and the second contact element along the longitudinal axis of the lamp tube to be reciprocally movable between the top wall of the housing **300** and the base. The shaft **335** includes a non-electrically conductive body in the shape of an elongated thin plank and a window **339** carved out from the body. The first contact element and the second contact element are fixedly disposed inside the housing **300** and face each other through the shaft **335**. The first contact element is configured to impart a spring-like bias on the shaft **335** and to urge the shaft **335** against the second contact element. In an embodiment, the

first contact element is a bow-shaped laminate bending towards the shaft **335** and the second contact element, which is disposed on the power supply. The first contact element and the second contact element are made from, for example, copper, copper alloy or both. When the actuator **332** is in its rest position, the first contact element and the second contact element are prevented by the body of the shaft **335** from engaging each other. However, the first contact element is configured to, when the shaft brings its window **339** downwards to a predetermined actuation point, engage and electrically connect the second contact element through the window **339**. When the electrically conductive pin **301** is unplugged from the socket, the coil spring **333** biases the actuator **332** to its rest position until the stopping flange is urged against the top wall of the housing **300**. The first contact element and the second contact element stay unconnected and the circuit of the LED tube lamp stays open. When the electrically conductive pin **301** is duly plugged into the socket on a lamp holder, the actuator **332** is depressed and brings the window **339** to the actuation point. The first contact element engages the second contact element to, directly or through a relay, complete the circuit of the LED tube lamp.

[0492] In some embodiments, two end caps of the LED tube lamp according to the embodiments of the present invention may configure two micro switches, correspondingly. In this way, the hurt resulting from leaking current to the user can be avoided when the LED tube lamp is in installation.

[0493] In some embodiments, the upper portion of the actuator **332** that projects out of the housing **300** is shorter than the electrically conductive pin **301**. In some embodiments, the ratio of the depth of the upper portion of the actuator **332** to that of the electrically conductive pin **301** is from 20% to 95%.

[0494] In some embodiments, the length of the second side end cap **3** is shorter than that of the first side end cap **3**. In general, the length of the second side end cap **3** is about 30% to 80% times that of the first side end cap **3**, for example, the length of the second side end cap **3** is in some embodiments about ⅔ of the length of second side end cap **3**. In the present embodiment, the length of the second side end cap **3** may be about half the length of the first side end cap **3**. The length of the first side end cap **3** may be, e.g., in the range of about 15 mm to 65 mm, depending on practical situations.

[0495] It's worth noting that the thickness of the second conductive layer of a two-layered bendable circuit sheet is, in some embodiments, larger than that of the first conductive layer in order to reduce the voltage drop or loss along each of the positive lengthwise portion and the negative lengthwise portion disposed in the second conductive layer. Compared to a one-layered bendable circuit sheet, since a positive lengthwise portion and a negative lengthwise portion are disposed in a second conductive layer in a two-layered bendable circuit sheet, the width (between two lengthwise sides) of the two-layered bendable circuit sheet is or can be reduced. On the same fixture or plate in a production process, the number of bendable circuit sheets each with a shorter width that can be laid together at most is larger than the number of bendable circuit sheets each with a longer width that can be laid together at most. Thus adopting a bendable circuit sheet with a shorter width can increase the efficiency of production of the LED module. And reliability in the production process, such as the accuracy of welding position when welding (materials on) the LED components, can also be improved, because a two-layered bendable circuit sheet can better maintain its shape.

[0496] As a variant of the above embodiments, a type of LED tube lamp is provided that has at least some of the electronic components of its power supply module disposed on a light strip of the LED tube lamp. For example, the technique of printed electronic circuit (PEC) can be used to print, insert, or embed at least some of the electronic components onto the light strip.

[0497] In one embodiment, all electronic components of the power supply module are disposed on the light strip. The production process may include or proceed with the following steps: preparation of the circuit substrate (e.g. preparation of a flexible printed circuit board); ink jet printing of metallic nano-ink; ink jet printing of active and passive components (as of the power supply module); drying/sintering; ink jet printing of interlayer bumps; spraying of insulating ink; ink jet printing of metallic nano-ink; ink jet printing of active and passive components (to sequentially form the included layers); spraying of surface bond pad(s); and spraying of solder resist against LED components.

[0498] In certain embodiments, if all electronic components of the power supply module are disposed on the light strip, electrical connection between terminal pins of the LED tube lamp and the light strip may be achieved by connecting the pins to conductive lines which are welded with ends of the light strip. In this case, another substrate for supporting the power supply module is not required, thereby allowing of an improved design or arrangement in the end cap(s) of the LED tube lamp. In some embodiments, (components of) the power supply module are disposed at two ends of the light strip, in order to significantly reduce the impact of heat generated from the power supply module's operations on the LED components. Since no substrate other than the light strip is used to support the power supply module in this case, the total amount of welding or soldering can be significantly reduced, improving the general reliability of the power supply module.

[0499] Another case is that some of all electronic components of the power supply module, such as some resistors and/or smaller size capacitors, are printed onto the light strip, and some bigger size components, such as some inductors and/or electrolytic capacitors, are disposed in the end cap(s). The production process of the light strip in this case may be the same as that described above. And in this case disposing some of all electronic components on the light strip is conducive to achieving a reasonable layout of the power supply module in the LED tube lamp, which may allow of an improved design in the end cap(s).

[0500] As a variant embodiment of the above, electronic components of the power supply module may be disposed on the light strip by a method of embedding or inserting, e.g. by embedding the components onto a bendable or flexible light strip. In some embodiments, this embedding may be realized by a method using copper-clad laminates (CCL) for forming a resistor or capacitor; a method using ink related to silk-screen printing; or a method of ink jet printing to embed passive components, wherein an ink jet printer is used to directly print inks to constitute passive components and related functionalities to intended positions on the light strip. Then through treatment by ultraviolet (UV) light or drying/sintering, the light strip is formed where passive components are embedded. The electronic components embedded onto the light strip include, for example, resistors, capacitors, and

inductors. In other embodiments, active components also may be embedded. Through embedding some components onto the light strip, a reasonable layout of the power supply module can be achieved to allow of an improved design in the end cap(s), because the surface area on a printed circuit board used for carrying components of the power supply module is reduced or smaller, and as a result the size, weight, and thickness of the resulting printed circuit board for carrying components of the power supply module is also smaller or reduced. Also in this situation, since welding points on the printed circuit board for welding resistors and/or capacitors if they were not to be disposed on the light strip are no longer used, the reliability of the power supply module is improved, in view of the fact that these welding points are most liable to (cause or incur) faults, malfunctions, or failures. Further, the length of conductive lines needed for connecting components on the printed circuit board is therefore also reduced, which allows of a more compact layout of components on the printed circuit board and thus improving the functionalities of these components.

[0501] With reference to FIGS. **19** and **20**, a short circuit board **253** includes a first short circuit substrate and a second short circuit substrate respectively connected to two terminal portions of a long circuit sheet **251**, and the electronic components of the power supply module are respectively disposed on the first short circuit substrate and the second short circuit substrate. The first short circuit substrate and the second short circuit substrate may have roughly the same length, or different lengths. In general, the first short circuit substrate (i.e. the right circuit substrate of short circuit board **253** in FIG. **19** and the left circuit substrate of short circuit board **253** in FIG. **20**) has a length that is about 30%-80% of the length of the second short circuit substrate (i.e. the left circuit substrate of short circuit board **253** in FIG. **19** and the right circuit substrate of short circuit board **253** in FIG. **20**). In some embodiments, the length of the first short circuit substrate is about ⅓-⅔ of the length of the second short circuit substrate. For example, in one embodiment, the length of the first short circuit substrate may be about half the length of the second short circuit substrate. The length of the second short circuit substrate may be, for example in the range of about 15 mm to about 65 mm, depending on actual application occasions. In certain embodiments, the first short circuit substrate is disposed in an end cap at an end of the LED tube lamp, and the second short circuit substrate is disposed in another end cap at the opposite end of the LED tube lamp.

[0502] In some embodiments, due to the external driving power, the length of the end caps are shortened. For ensuring the total length of the LED tube lamp to conform to a standard for a fluorescent lamp, a length of the lamp tube is lengthened to compensate the shortened length of the end caps. Due to the lengthened length of the lamp tube, the LED light string is correspondingly lengthened. Therefore, the interval of adjacent two LEDs disposed on the LED light string becomes greater under the same illuminance requirement. The greater interval increases the heat dissipation of the LEDs and so the operation temperature of the LEDs is lowered and the lifespan of the LED tube lamp is extended.

[0503] The LED tube lamps according to various different embodiments of the present invention are described as above. With respect to an entire LED tube lamp, the features including "adopting the bendable circuit sheet as the LED light strip", and "utilizing the circuit board assembly (including a long circuit sheet and a short circuit board) to connect the LED light strip and the power supply" may be applied in practice singly or integrally such that only one of the features is practiced or a number of the features are simultaneously practiced.

[0504] Furthermore, the feature "adopting the bendable circuit sheet as the LED light strip" includes any related technical points and their variations and any combination thereof as described in the abovementioned embodiments of the present invention.

[0505] As an example, the feature "adopting the bendable circuit sheet as the LED light strip" includes "the connection between the bendable circuit sheet and the power supply is by way of wire bonding or soldering bonding; the bendable circuit sheet includes a wiring layer and a dielectric layer arranged in a stacked manner; the bendable circuit sheet has a circuit protective layer made of ink to reflect lights and has widened part along the circumferential direction of the lamp tube to function as a reflective film."

[0506] For example, according to the design of the power supply in some embodiments, the circuit board assembly has a long circuit sheet and a short circuit board that are adhered to each other with the short circuit board being adjacent to the side edge of the long circuit sheet. The short circuit board may be provided with power supply module to form the power supply.

[0507] For the drive architecture of dual-end power supply, the external driving signal may be input by using only one end thereof as single-end power supply.

[0508] The LED tube lamp may omit the rectifying circuit in the power supply module when the external driving signal is a DC signal.

[0509] According to the design of the rectifying circuit in the power supply module, there may be a signal rectifying circuit, or dual rectifying circuit. First and second rectifying circuits of the dual rectifying circuit are respectively coupled to the two end caps disposed on two ends of the LED tube lamp. The single rectifying circuit is applicable to the drive architecture of signal-end power supply, and the dual rectifying circuit is applicable to the drive architecture of dual-end power supply. Furthermore, the LED tube lamp having at least one rectifying circuit is applicable to the drive architecture of low frequency AC signal, high frequency AC signal or DC signal.

[0510] According to the design of the pin in the LED tube lamp, there may be two pins in single end (the other end has no pin), two pins in corresponding end of two ends, or four pins in corresponding end of two ends. The designs of two pins in single end and two pins in corresponding end of two ends are applicable to signal rectifying circuit design of the rectifying circuit. The design of four pins in corresponding end of two ends is applicable to dual rectifying circuit design of the rectifying circuit, and the external driving signal can be received by two pins in only one end or any pin in each of two ends.

[0511] A protection circuit may be additionally added to protect the LED module. The protection circuit detects the current and/or the voltage of the LED module to determine whether to enable corresponding over current and/or over voltage protection.

[0512] According to the design of the auxiliary power module of the power supply module, the energy storage unit may be a battery or a supercapacitor, connected in parallel with the LED module. The auxiliary power module is applicable to the LED lighting module having the driving circuit.

[0513] According to the design of the LED module of the power supply module, the LED module comprises plural strings of LEDs connected in parallel with each other, wherein each LED may have a single LED chip or plural LED chips emitting different spectrums. Each LEDs in different LED strings may be connected with each other to form a mesh connection.

[0514] The above-mentioned features of the present invention can be accomplished in any combination to improve the LED tube lamp, and the above embodiments are described by way of example only. The present invention is not herein limited, and many variations are possible without departing from the spirit of the present invention and the scope as defined in the appended claims.

What is claimed is:

1. A light-emitting diode (LED) tube lamp, comprising:

a lamp tube;

two end caps, each having at least one pin, and each coupled to a respective end of the lamp tube, the pins of the two end caps for receiving an external driving signal;

a first rectifying circuit, coupled to a pin of one of the two end caps, for rectifying the external driving signal to produce a rectified signal;

a second rectifying circuit, coupled to a pin of the other of the two end caps, for simultaneously rectifying the external driving signal with the first rectifying circuit;

a filtering circuit, coupled to the first and the second rectifying circuits, for filtering the rectified signal to produce a filtered signal;

an LED lighting module, coupled to the filtering circuit, and configured to receive the filtered signal to produce a driving signal, wherein the LED lighting module includes an LED module configured to receive the driving signal and emit light; and

an installation detection module, configured to determine whether to cut off the external driving signal passing through the LED tube lamp, wherein the installation detection module includes a first installation detection terminal and a second installation detection terminal, the first installation detection terminal is coupled to the first and/or the second rectifying circuits, the second installation detection terminal is coupled to the filtering circuit,

wherein, the installation detection module is configured such that when a current passing through the first and the second installation detection terminals is bigger than or equal to a specific current value, the installation detection module conducts to make the LED tube lamp operate in a conductive state; and when the current passing through the first and the second installation detection terminals is smaller than the specific current value, the installation detection module cuts off to make the LED tube lamp enter in a non-conducting state.

2. The LED tube lamp according to claim **1**,

wherein the installation detection module includes a switch circuit, a detection pulse generating module, a detection result latching circuit, and a detection determining circuit,

wherein the detection determining circuit is coupled to the detection result latching circuit, the first and the second installation detection terminals, and is configured to detect a signal between the first and the second installation detection terminals to generate a detection result signal to the detection result latching circuit,

wherein the detection pulse generating module is coupled to the detection result latching circuit, and is configured to inform the detection result latching circuit of a time point for storing a detection result,

wherein the detection result latching circuit is coupled to the switch circuit and stores the detection result according to the detection result signal, and further transmits the detection result to the switch circuit, and

wherein the switch circuit controls the state between conducting or cut off between the first and the second installation detection terminals according to the detection result.

3. The LED tube lamp according to claim **2**, wherein the detection pulse generating module includes a first capacitor, a second capacitor, a first resistor, a second resistor, a first buffer, an inverter, a diode, and an OR gate, wherein one end of the first resistor is coupled to an input terminal of the inverter, one end of the second resistor is coupled to an input terminal of the first buffer, a cathode of the diode is coupled to the input terminal of the first buffer and the diode is coupled with the second resistor in parallel, one ends of the first and the second capacitors are jointly coupled, the other ends of the first and the second capacitors are correspondingly coupled to the input terminal of the inverter and the input terminal of the first buffer, an output terminal of the inverter and an output terminal of the first buffer are coupled to two input terminals of the OR gate, respectively, and an output terminal of the OR gate is coupled to the detection result latching circuit.

4. The LED tube lamp according to claim **3**, wherein when the one end cap of the LED tube lamp is inserted into a lamp socket and the other end cap thereof is electrically coupled to a human body, or when both the end caps are inserted into the lamp socket, and the other end of the first resistor is coupled to a driving voltage, the other end of the second resistor is coupled to a reference voltage, and a joint connection node of the first and the second capacitors is coupled to an input pulse signal, wherein during a high logic level of the input pulse signal inputting the joint connection node, the OR gate outputs a first pulse signal at the output terminal thereof for the detection result latching circuit storing the detection result based on the detection result signal and the first pulse signal, and the OR gate stops outputting the first pulse signal after a first delay time from the beginning of the input pulse signal being at the high logic level.

5. The LED tube lamp according to claim **4**, wherein a width of the input pulse signal received by the joint connection node is equal to one time period, and the input pulse signal keeps a low logic level after the time period is over, wherein when the time period is over, the output terminal of the inverter outputs a high logic level signal to make the OR gate output a second pulse signal for the detection result latching circuit latching the detection result based on the detection result signal and the second pulse signal.

6. The LED tube lamp according to claim **5**, wherein a pulse width of the first or the second pulse signal is from 10 us to 1 ms.

7. The LED tube lamp according to claim **5**, wherein after a first delay time from the time period being over, the output of the inverter transfers from the high logic level into a low logic level to make the OR gate stop outputting the second pulse signal.

8. The LED tube lamp according to claim **5**, wherein a pulse width of the second pulse signal is determined based on the capacitance of the first capacitor and the resistance of the first resistor.

9. The LED tube lamp according to claim **5**, wherein a time difference between productions of the first and second pulse signals or an interval with a defined time between both of them includes as following:

the interval=(X+Y)(T/2), wherein T represents the cycle of the external driving signal, X is a natural number, and 0<Y<1.

10. The LED tube lamp according to claim **9**, wherein a range for Y is from 0.05 to 0.95.

11. The LED tube lamp according to claim **5**, wherein a time difference between productions of the first and the second pulse signals is not equal to a multiple of 180 degree phase differences of the external driving signal.

12. The LED tube lamp according to claim **4**, wherein a pulse width of the first pulse signal output by the OR gate is decided by the capacitance of the second capacitor and the resistance of the second resistor.

13. The LED tube lamp according to claim **3**,

wherein the detection pulse generating module further includes a third capacitor, a third resistor, and a second buffer,

wherein a connection node of the third capacitor and the third resistor is coupled to an input terminal of the second buffer, an output terminal of the second buffer is coupled to the joint connection node of the first and the second capacitors, and the third capacitor and the third resistor are coupled in serial between a driving voltage and a reference voltage,

wherein the third capacitor, the third resistor, and the second buffer are configured to process the driving voltage to generate an input pulse signal at the joint connection node, and

wherein a width of the input pulse signal is equal to one time period.

14. The LED tube lamp according to claim **13**, wherein the time period is determined based on the capacitance of the third capacitor and the resistance of the third resistor.

15. The LED tube lamp according to claim **2**,

wherein the detection determining circuit is coupled to the first installation detection terminal through a switch circuit coupling terminal and the switch circuit and is coupled to the detection result latching circuit via a detection result terminal, and

wherein the detection determining circuit includes a comparator, and a resistor, wherein a negative input terminal of the comparator receives a reference voltage, a positive input terminal thereof is coupled to the switch circuit coupling terminal and is coupled to the second installation detection terminal through the resistor, and an output terminal of the comparator is coupled to the detection result terminal.

16. The LED tube lamp according to claim **15**, wherein when the current passing through the first and the second installation detection terminals passes through the resistor and makes a voltage on the positive input terminal higher than the reference voltage, the comparator produces a high logic level of the detection result signal and outputs to the detection result terminal.

17. The LED tube lamp according to claim **16**, wherein the current passing through the first and the second installation detection terminals inputs from the first installation detection terminal and passes through the switch circuit, the switch circuit coupling terminal, and the detection determining circuit.

18. The LED tube lamp according to claim **2**,

wherein the detection result latching circuit is coupled to the detection determining circuit via a detection result terminal, to the switch circuit via a detection result latching terminal, and to the detection pulse generating module via a pulse signal output terminal,

wherein the detection result latching circuit includes a D flip-flop, a resistor, and an OR gate, and

wherein the D flip-flop has a CLK input terminal coupled to the detection result terminal, and a Q output terminal coupled to one end of the resistor, the OR gate has two input terminals respectively coupled to the pulse signal output terminal and the Q output terminal of the D flip-flop, and an output coupled to the detection result latching terminal.

19. The LED tube lamp according to claim **18**,

wherein when a D input terminal of the D flip-flop is coupled to a driving voltage and the other end of the resistor is coupled to a reference voltage, and further when the detection result terminal outputs a low logic level of the detection result signal to the CLK input terminal, the D flip-flop outputs a low logic level signal at the Q output terminal thereof, but the D flip-flop outputs a high logic level signal at the Q output terminal thereof when the detection result terminal outputs a high logic level of the detection result signal to the CLK input terminal, and

wherein when at least one of a pulse signal from the pulse signal output terminal and the logic level signal output at the Q output terminal of the D flip-flop is at high logic level, the OR gate outputs a high logic level of the detection result latching signal at the detection result latching terminal.

20. The LED tube lamp according to claim **2**, wherein the switch circuit is coupled to the first installation detection terminal, to the detection result latching circuit via a detection result latching terminal, and to the detection determining circuit via a switch circuit coupling terminal, and the switch circuit includes a transistor coupled to the first installation detection terminal, to the detection result latching terminal, and to the switch circuit coupling terminal.

21. The LED tube lamp according to claim **20**, wherein when the detection pulse generating module produces a pulse signal, the transistor conducts to allow the detection determining circuit to perform detection for determining a detection result latching signal output by the detection result latching circuit at the detection result latching terminal to be a high logic level or a low logic level, and when the detection result latching signal is a high logic level, the transistor conducts to make the first and the second installation detection terminals conducting, and when the detection result latching signal is a low logic level, the transistor cuts off to make the first and the second installation detection terminals cut off.

22. The LED tube lamp according to claim **20**, wherein the transistor includes a bipolar junction transistor being a power transistor, the bipolar junction transistor has a collector coupled to the first installation detection terminal, a base coupled to the detection result latching terminal, and an emitter coupled to the switch circuit coupling terminal.

23. The LED tube lamp according to claim **2**, wherein when the one end cap of the LED tube lamp is inserted into a lamp socket and the other thereof floats or electrically couples to a human body, the detection result latching circuit outputs a low logic level of a detection result latching signal to make the switch circuit cut off, wherein the switch circuit cutting off makes the first and the second installation detection terminals cut off so as to make the LED tube lamp be in a non-conducting state.

24. The LED tube lamp according to claim **2**, wherein when the two end caps of the LED tube lamp are correctly inserted into a lamp socket, the detection result latching circuit outputs a high logic level of a detection result latching signal to make the switch circuit conducting, wherein the switch circuit conducting makes the first and the second installation detection terminals conducting so as to make the LED tube lamp operate in a conducting state.

25. A light-emitting diode (LED) tube lamp, comprising:

a lamp tube;

two end caps, each having at least one pin, and each coupled to a respective end of the lamp tube, the pins of the two end caps for receiving a driving signal;

an LED module coupled to the two end caps, and configured to emit light in response to the driving signal; and

an installation detection circuit configured to determine whether to cut off a current generated from the driving signal from reaching the LED module, the installation detection circuit having an input terminal and output terminal,

wherein the installation detection circuit is configured such that when a current passing through the input terminal and the output terminal is bigger than or equal to a specific current value, the installation detection circuit conducts to make the LED module operate in a conductive state, and when the current passing through the input terminal and output terminal is smaller than the specific current value, the installation detection circuit cuts off to make the LED module enter in a non-conducting state.

26. The LED tube lamp of claim **25**, wherein the installation detection circuit further comprises:

a first circuit configured to output two pulse signals, the first pulse signal output at a first time and the second pulse signal output at a second time after the first time; and

a switch configured to receive the driving signal and to receive the two pulse signals, wherein the two pulse signals control turning on and off of the switch to control whether the LED module operates in a conductive state or in a non-conducting state.

27. The LED tube lamp of claim **26**, wherein:

the driving signal is an alternating current (AC) signal having a period; and

the amount of time between the first time and the second time is not a multiple of half of the period of the driving signal.

28. The LED tube lamp of claim **27**, wherein:

the first time is at the beginning of the first pulse signal; and

the second time is at the beginning of the second pulse signal.

29. The LED tube lamp of claim **27**, wherein:

a time difference between productions of the first and second pulse signals or an interval with a defined time between both of them is the following:

the interval=(X+Y)(T/2), wherein T represents the period of the driving signal, X is a natural number, and $0.05<Y<0.95$.

30. The LED tube lamp of claim **25**, further comprising:

a first rectifying circuit connected between the input terminal of the installation detection circuit and a first pin of one end cap of the two end caps; and

a filtering circuit connected between the output terminal of the installation detection circuit and the lighting module.

31. The LED tube lamp of claim **30**, further comprising:

a second rectifying circuit, coupled to a first pin of the other of the two end caps and coupled to the installation detection circuit.

32. The LED tube lamp of claim **30**, further comprising:

a driving circuit coupled between the LED module and the installation detection circuit.

33. An LED tube lamp, comprising:

an installation detection circuit comprising:

a first circuit configured to output a plurality of pulse signals including a first pulse signal and a second pulse signal, the first pulse signal output at a first time and the second pulse signal output at a second time after the first time; and

a switch configured to receive an LED driving signal and to receive the plurality of pulse signals, wherein the plurality of pulse signals control turning on and off of the switch;

wherein the installation detection circuit is configured to:

during a detection stage, detect during each of the plurality of pulse signals whether the LED tube lamp is properly connected to a lamp socket;

when it is not detected during any of the plurality of pulse signals that the LED tube lamp is properly connected to the lamp socket, control the switch to remain in an off state after the detection stage; and

when it is detected during at least one of the plurality of pulse signals that the LED tube lamp is properly connected to the lamp socket, control the switch to remain in an on state after the detection stage.

34. The LED tube lamp of claim **33**, further comprising:

a latch circuit connected to the switch and configured to control turning on and off of the switch.

35. The LED tube lamp of claim **33**, wherein:

the LED driving signal is an AC signal having a period; and

the amount of time between the first time and the second time is not a multiple of half of the period of the LED driving signal.

36. The LED tube lamp of claim **35**, wherein:

the first time is at the beginning of the first pulse signal; and

the second time is at the beginning of the second pulse signal.

* * * * *