The Wayback Machine - https://web.archive.org/web/20150106040908/http://www.recom-power.com:80/fileadmin/RECOM-Downloads/Whitepaper/…

HIGH POWER LED AND DC/DC-DRIVER APPLICATIONS

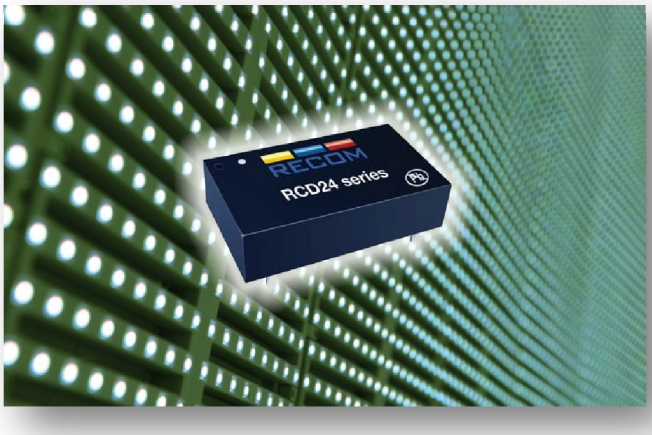

CONTENTS:

1. LED Characteristics
2. Driving LEDs with a Constant Current
3. Some DC Constant Current Sources
4. Connecting LEDs in Strings
5. Connecting LED Strings in Parallel
6. Balancing LED currents in Parallel Strings
7. Parallel Strings or Grid Array – Which is better?
8. Thermal Considerations
PRACTICAL EXAMPLES
9. Temperature Derating
10. Brightness Compensation
11. Some Circuit Ideas using the RCD LED Driver
12. About RECOM

1 LED CHARACTERISTICS

The first rule of war is "know your enemy". It is the same principle with Solid State Lighting (SSL) – if you don't understand how an LED behaves, don't be surprised when your application doesn't succeed.

LEDs are non-linear devices. If a low voltage is applied to an LED it does not conduct. As the voltage increases, it passes a threshold value when suddenly the LED starts to emit light and the current sharply increases. Thereafter, if the voltage continues to rise the LED rapidly overheats and burns out. The trick is to operate the LED in the narrow band between full off and full on.

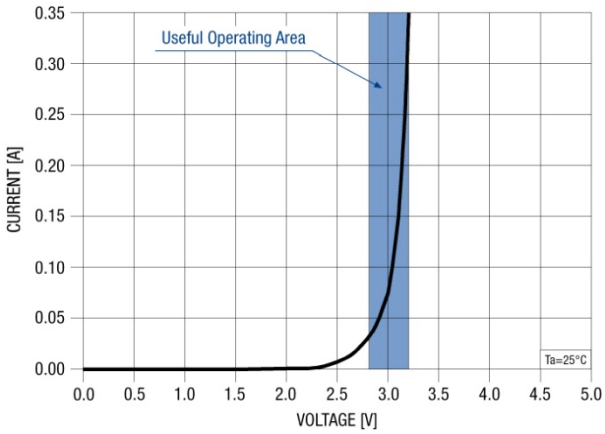

Graph 1: Useful operating area for high power LEDs [Ta=25°C]

There is an additional complication, however. The useful operating area voltage is different with different high power LEDs (even within LEDs from the same batch and supplier) and the voltage range changes with ambient temperature and age of the LED.

Graph 2 shows the useful operating area in more detail. In this example we are looking at 4 identical LEDs that according to the datasheet have the same specification. All LED manufacturers sort LEDs out according to the colour of light that they emit (this is called "binning" – the LEDs are tested during manufacture and sorted out into different bins according to their colour temperature).

The consequence is that the LEDs are all mixed up and one delivery can include several different production batches and therefore a wide variation in the threshold values, or forward voltage (Vf), are to be expected. Most high power LED datasheets specify a Vf tolerance of around 20%, so the wide variations shown Graph 2 are not exaggerated.

In this example, If we choose a supply voltage of, say, 3V then LED 1 is being over-driven, LED 2 draws 300mA, LED 3 draws 250mA and LED 4 draws only 125mA.

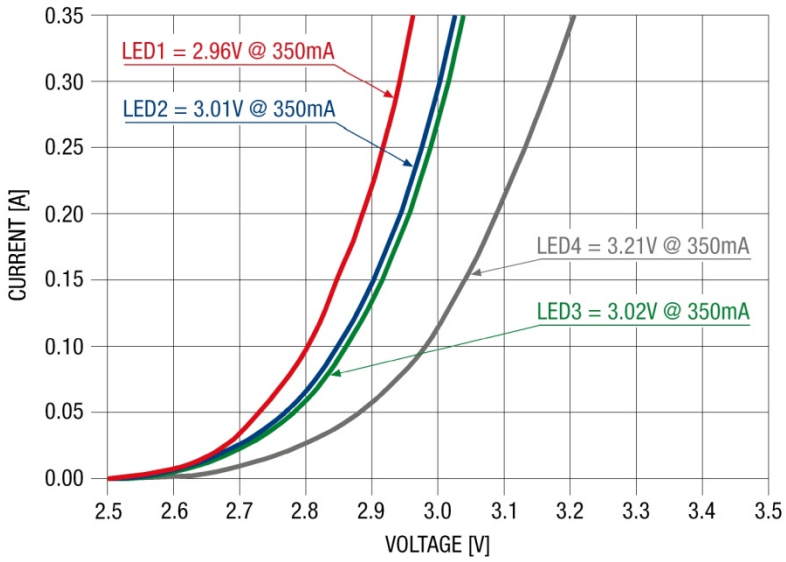

Graph 2: LED characteristics in detail

Furthermore theses curves are dynamic. As the LEDs warm up to their operating temperatures, the curves all drift to the left (the forward voltage, Vf, reduces with increasing temperature).

The light output of the LED is, however, directly proportional to the current flowing through it (Graph 3), so in the example given above with a 3V supply voltage, LED 1 will glow like a supernova, LED 2 will be slightly brighter than LED 3 and LED 4 will appear very dim.

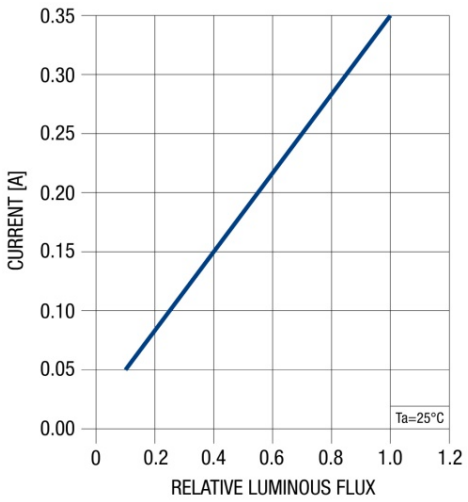

Graph 3: Relationship of light output to LED current

2 DRIVING LEDs WITH A CONSTANT CURRENT

The solution to this problem of the variability in forward voltage, Vf, is to use a constant current rather than a constant voltage to drive the LEDs.

The LED driver automatically adjusts the output voltage to keep the output current constant and therefore the light output constant. This works with a single LED or with a chain of string of LEDs connected in series. As long as the current through all LEDs is the same, they will have the same brightness even if the Vf across each LED is different (see Figure 1).

As the LEDs warm up to their working temperature, the constant current driver automatically reduces the driving voltage to keep the current through the LEDs constant, so the brightness of the LEDs is also independent of working temperature.

Another major advantage is that a constant current driver does not allow any single LED in a chain to be overdriven and thus ensures that they all have a long operating life. If any LED fails short circuit, the remaining LEDs still operate with the correct current.

Fig. 1: LED String

3 SOME DC CONSTANT CURRENT SOURCES

The simplest constant current source is a constant voltage supply driving the LEDs via a resistor. If the voltage drop across the resistor is about the same as the forward voltage of a LED, then a 10% change in Vf causes a similar change in the LED current (compare this with the curves shown in Graph 2 where a 10% change in Vf causes about a 50% change in LED current). This solution is very cheap, but has a poor current regulation and is very wasteful in power. Many of the low cost cluster-type LED bulbs offered as replacement lamps for low voltage halogens use this method. Needless to say, if any LED fails short circuit, the resistor is overloaded and usually burns out after a relatively short while, thus the lifetime of these cluster LED lamps is relatively short.

The next simplest constant current source is a linear current regulator. There are several low cost LED drivers available on the markets that use this method or a standard linear voltage regulator can be used in constant current mode. The internal feedback circuit keeps the current regulated to within about ±5% but excess power has to be dumped as heat, so good heat sinking of the regulator is required. The disadvantage is the poor efficiency of this solution, which rather goes against the concept of using high efficiency SSL devices.

The best constant current source is a switching regulator. The price of the driver is higher than the other solutions, but the output current accuracy can be as accurate as ±3% over a wide range of LED loads and conversion efficiencies can be as high as 96% which means that only 4% of the energy is wasted as heat and the drivers can be used at high ambient temperatures.

Example of constant current sources for LEDs:

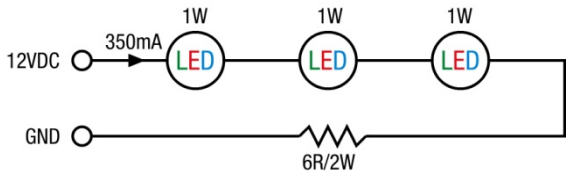

Fig. 2: Simple Resistor: Low cost, but inaccurate and wasteful

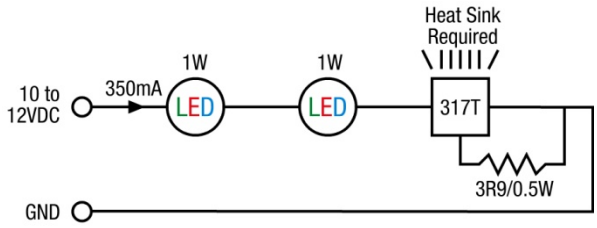

Fig. 3: Linear Regulator: Low cost and accurate, but wasteful

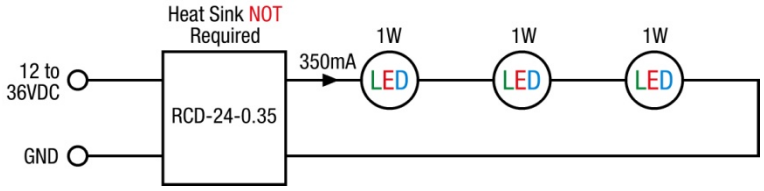

Fig. 4: Switching Regulator: Higher cost, but accurate and efficient

One important difference between the options shown above is the input and output voltage ranges.

A DC/DC switching regulator has a wide input voltage and output voltage range over which the constant current regulation works well (the RCD-24.0.35 works from 5V to 36VDC has an output voltage range of 2-34VDC, for example). A wide output voltage range not only allows many different combinations of LED string lengths, but also permits a wide dimming range.

The other two options shown above will have power dissipation problems if only 1 LED is needed, as the resistor or linear regulator will have a larger volt drop across them which will still further increase the power dissipation losses. The input voltage range has to also be restricted for the same reason.

4 CONNECTING LEDs IN STRINGS

The majority of high power white LEDs are designed to be run at 350mA constant current. This is because the chemistry of a white light LED sets the forward voltage at about 3V and 3.0V x 0.35A ~ 1 Watt, which is a convenient LED power.

Most DC/DC constant current LED drivers are buck or step-down converters. This means that the maximum output voltage is lower than the input voltage. Thus the number of LEDs that can be driven depends on the input voltage.

Input Voltage	5VDC	12VDC	24VDC	36VDC	54VDC
Typical # of LEDs in String	1	3	7*	10*	15

Table 1: Number of LEDs that can be driven per string vs. Input voltage

If the input voltage is not regulated (e.g. a battery) then the maximum number of LEDs must be reduced depending on the minimum input voltage available.

Example:

How many 1W LEDs can be driven from a 12V Lead acid battery?

Battery voltage range	...	9 ~ 14VDC
DC/DC driver headroom	...	1V
Therefore, LED driver output voltage range	...	8 ~ 13VDC
if LED forward voltage, Vf	...	3.3V typical*
then the maximum number of LEDs that can be driven	...	**2**

Two LEDs is not very much! A way around this problem is to either use a boost converter where the output voltage is higher than the input voltage or to use two or more strings of LEDs in parallel. For each 350mA string of LEDs used, the driver current has to be increased to deliver the correct overall current. So a single string needs a 350mA driver, two strings in parallel require a 700mA driver, three parallel strings would need a 1.05A source, etc.

Therefore the choice of LED driver is dependent on the input voltage available and the number of strings of LEDs that need to be driven.

Figure 5, 6 and 7 shows some possible combinations for a fixed 12VDC supply using typical 1W white LEDS.

* Note: It is a common misconception that the number of LEDs that can be driven is dependent on the maximum Vf given in the LED datasheets. This is not true in practice because when the LEDs reach their operating temperature, the Vf falls significantly. Thus the typical Vf given in the datasheet can be reliably used. A typical datasheet might state that Vf is 3.3V minimum, 3.6V typical and 3.9V maximum at 25°C ambient. However at 50°C, the figures would be closer to 3.0V minimum, 3.3V typical and 3.6V max. Therefore a fixed 24V supply can reliably drive 7 LEDs and a 36V supply 10 LEDs, even if there is some voltage drop across the LED driver.

5 CONNECTING LED STRINGS IN PARALLEL

3 LEDs in a single string with 350mA driver:

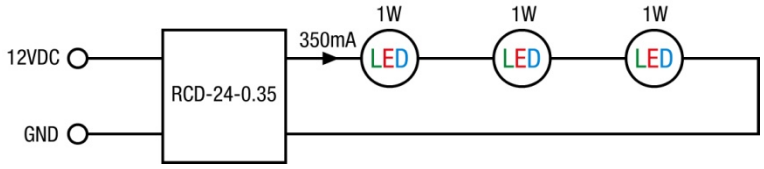

Fig. 5: Advantages: accurate LED current, fail safe / Disadvantages: low number of LEDs per driver

6 LEDs in two strings with 700mA driver:

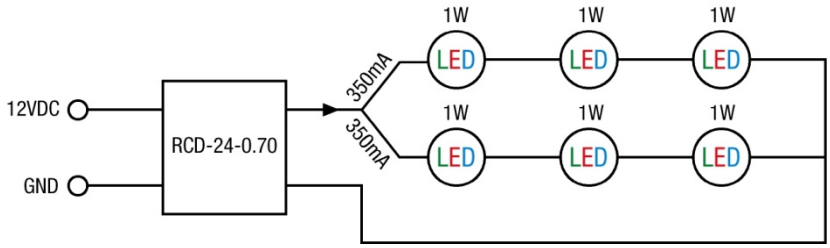

Fig. 6: Advantages: double number of LEDs per driver - Disadvantages: not fail safe, unbalanced currents in the strings

9 LEDs in three strings with 1050mA driver:

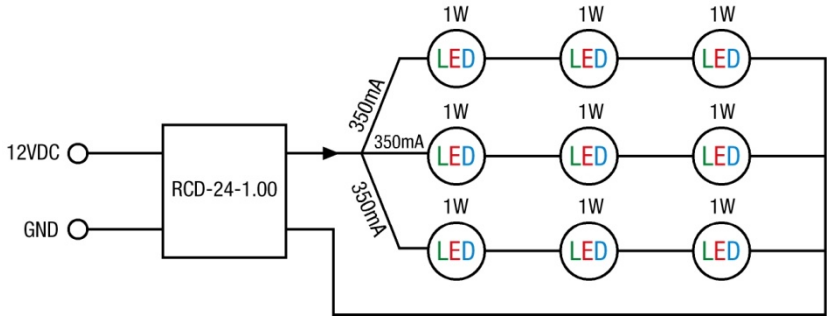

Fig. 7: Advantages: triple number of LEDs per driver - Disadvantages: not fail safe, unbalanced currents in the strings

Connecting a single string of LEDs to an LED driver is the safest and surest method of driving LEDS. If any LED fails open circuit, the current to the remaining LEDs in the string is broken. If any LED fails short circuit, the current in the remaining LEDs remains the same.

Driving multiple strings from a single LED driver has the advantage that more LEDs can be driven, but there are dangers if any LED fails. With two strings in parallel, if any LED fails open circuit, the 700mA constant current will flow through the remaining LED string and cause it also to fail after a very short time. With three strings in parallel, if any single LED fails, the remaining two strings will share the 1A driving current.

Both strings will be overloaded with 500mA per string. The LEDs will probably cope with this for some time, depending on how well the LEDs are heat-sinked, but eventually the over-current will cause another LED to fail, whereupon the third string will take all of the 1A current and fail almost immediately.

If any LED fails short circuit, then the currents flowing in the strings will be very unbalanced with the majority of the current flowing through the string with the shorted LED. This will eventually cause the string to fail with the same catastrophic domino- effect on the remaining strings as described above.

High power LEDs are very reliable in service, so the failures described above may not happen very often. Thus many LED lighting designers choose the convenience and cost saving of running multiple strings from a single driver and accept the risk that multiple LEDs will fail if any single LED fails.

6 BALANCING LED CURRENTS IN PARALLEL STRINS

Another important concern is the balance of currents that flow in multiple strings. We know that two or three strings of LEDs will have different combined forward voltages. The LED driver will deliver a constant current at a voltage that is the average of the combined forward voltages of each string. This voltage will be too high for some strings and too low for others, so the currents will not be equally shared.

Imbalance in LED currents flowing through multiple strings:

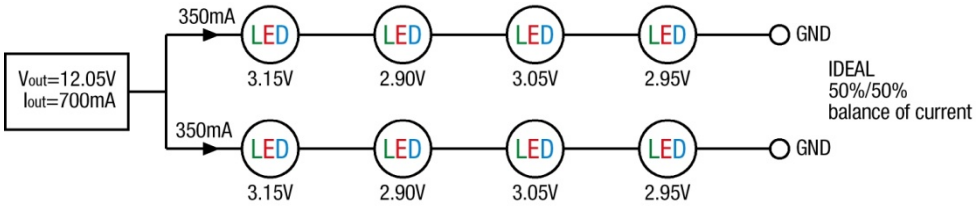

Fig. 8: Ideal balance

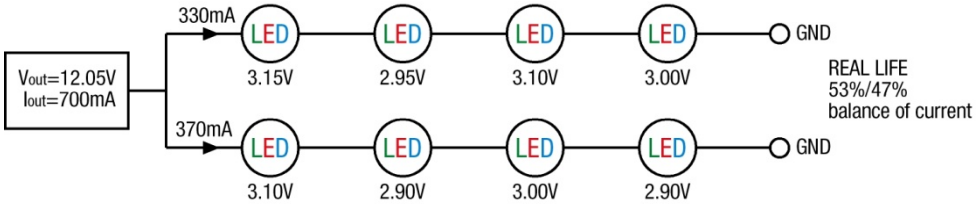

Fig. 9: Real life balance

In the example given above, the current imbalance is not sufficient to cause the overloaded string to fail, so both LED strings will work reliably. However there will be a 6% difference in light output between the two strings.

The solution to the problem of unbalanced strings is either to use one driver per string or to add an external circuit to balance out the currents. Such a circuit is a current mirror.

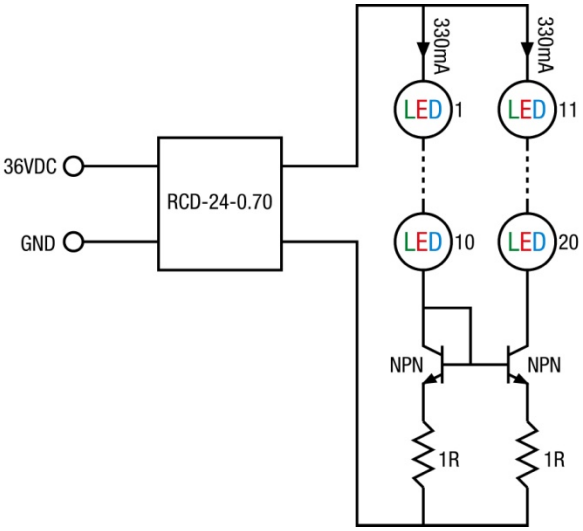

Fig. 10: Balancing LED currents using a current mirror

The first NPN transistor acts as the reference. The second NPN transistor "mirrors" this current. In this way the currents in the strings are automatically equally shared. The 1 Ohm emitter resistors are theoretically not required for the current mirror, but in practice they help balance out differences in Vbe between the transistors and give a more accurate current balance.

A current mirror also helps protect against LED failures. If any LED in the first string fails open circuit, then the second string is protected (the reference current is zero, so the current in the other strings falls also to zero). Also if any LED fails short circuit, then the currents are still equally balanced.

However, if any LED fails open circuit in the second string, then the current mirror will not protect the LEDs in the first string from being overdriven. A modification of this circuit can also protect against this situation, where the first transistor uses a dummy load to set the current in the remaining strings. It is also possible to extend the current mirror to three or more strings by connecting more transistors with their base connections all paralleled.

Some LED driver manufacturers claim that LEDs automatically share the current equally and such external current mirror circuits are unnecessary. This is not true. There is always an imbalance unless the combined forward voltages of the LED strings are absolutely identical.

If, say, two parallel strings are mounted on a common heat-sink then if one string draws more current than the other, it will run brighter and hotter. The heat sink temperature will slowly rise, thus causing the Vf of the second string to fall and cause it to also try and draw more current. In theory, the two strings should then balance out their currents because of the thermal negative feedback. In practice, this effect can be measured, but it is not enough to guarantee accurate current balancing.

Furthermore, if the two strings are in fact two separate LED lamps, there will be no thermal compensation feedback. The lamp with the lowest combined Vf will draw the most current, will run the hottest and the Vf will fall still further. This will make the imbalance worse and can lead to thermal runaway and LED failure.

When the circuit in Figure 10 was first published, there was some criticism on the Web that a current mirror was not an ideal solution and even just adding the 1 Ohm resistors would help balance out the currents. This is true to an extent, but if you need an accurate current balance then the current mirror is still the simplest and best solution apart from running each lamp from its own driver.

7 PARALLEL STRINGS OR GRID ARRAY – WHICH IS BETTER?

In the section 4, the consequences of a single LED failure open circuit or short circuit were discussed. The larger the number of parallel strings, the lower the danger that a single fault in one string would cause the remaining strings to fail. Thus if five strings were connected in parallel, then if one LED string failed open circuit, then the remaining four strings would all be overdriven by only 125%. The LEDs would glow excessively bright, but they would be unlikely to fail as long as the heat sinking was adequate.

The disadvantage of connecting many strings in parallel is that a driver capable of delivering several Amps will be required and this could be expensive or hard to find. Also, some care is required with LED drivers capable of delivering many Amps of current; if the LED load is too low because, for example a connector to some of the strings has a faulty connection, the current will blow the remaining LEDs instantly. Great care needs to be taken that all connections are sound before the LED driver is turned on. Many expensive LED lamp fittings have been damaged by faulty wiring with high current LED drivers!

In practice, it is safer to limit the number of parallel strings to five or less per driver and to use several low current drivers rather than a single high current driver if many LEDs need to be driven.

Using long strings is also a good idea because if any LED fails short circuit, then the increase in current in that string will be proportionately less the longer the strings are.

The next question is whether to connect the LEDs in individual strings or to cross-connect the strings to make an LED array. The following example using 15 LEDS illustrates the two options (in both cases, the driver remains the same). It would be possible to connect the 15 LEDs in five columns of 3 LEDs, but for the reason given above, three columns of 5 LEDs is a safer arrangement.

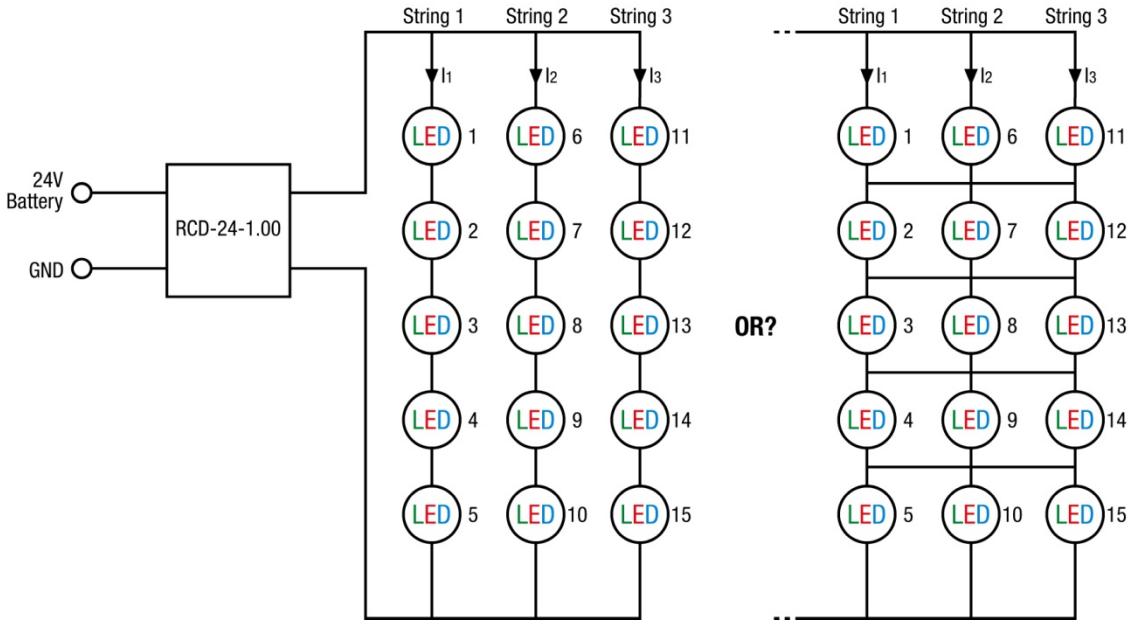

Fig. 11: Connecting LEDs in parallel strings or a grid array

The advantage of a grid array is that if any LED fails, the whole column of LEDs does not fall out and only the LEDs on the same row as the failed LED are overloaded. If any LED fails short circuit, then the LEDs in the same row will no longer light up, but the current through the remained LEDs will still remain correct.

If it is important that a 15 LED lamp is reliable and that it continues to emit light even if individual LEDs fail open or short circuit, then a grid array solution is the best way of wiring up the LEDs.

The disadvantage of a grid array is that the Vf across each row is averaged out and the ±20% tolerance in individual LED forward voltages can mean that the LEDs do not all have a consistent brightness. This can lead to hot spots and a reduced LED lifetime for some of the LEDs, as well as looking unsightly.

If it is important that a 15 LED lamp has a very even light output with no hot spots, then wiring the LEDs up in parallel strings is the best way.

If both fault tolerance and even light output is essential, then it is best to use three strings and three 350mA drivers!

8 THERMAL CONSIDERATIONS

High power LEDs need good heat-sinking if they are to have a lifetime close to that given in the datasheets. The first question might be why do high efficiency LEDs get hot? It seems counterintuitive that an LED with a lumen efficiency of around 50 lumens per Watt needs more careful thermal design than, say, a floodlight with a fraction of its efficiency.

The following example may help: A 100W halogen floodlight will deliver 5W of useful light. Of the remaining 95W of power consumed, approximately 80W will be radiated out in the infra-red and only 15W will be conducted to the lamp housing as heat. A 50W LED will also deliver 5W of useful light. But the remaining 45W of power will all be conducted as heat to the housing. Therefore although the LED lumen efficiency is double that of the incandescent lamp, the housing has to be designed to cope with nearly three times the conducted heat.

Another important difference between incandescent and LED light sources is that an incandescent lamp relies on high temperatures in order to operate (the filament is glowing white hot after all) whereas LED lifetimes deteriorate sharply if the junction temperature rises above 100°C.

Junction Temperature	<100°C	100-115°C	115-125°C	>125°C
LED Lifetime B50: 50% survival rate	100 kh	75 kh	50 kh	20 kh

Table 2: LED lifetime vs. Junction temperature

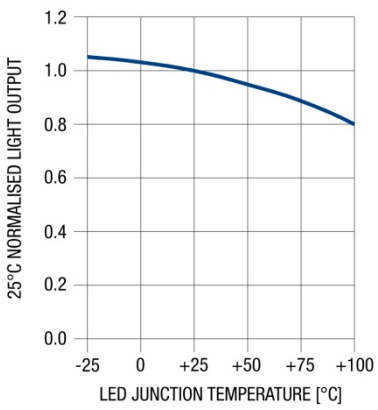

High power LEDs also lose lumen efficiency with rising junction temperature. The luminous flux output figures given in the datasheets are typically given for 25°C only.

At 65°C junction temperature, the light output falls typically 10% and at 100°C, 20% of the luminosity is lost (Graph 4).

Graph 4: LED luminous flux vs. LED Junction temperature

Thus, a well designed LED lamp will run at an maximum LED base-plate temperature of around 65°C. One way to ensure that the LED temperature does not rise too high is to derate the LED with rising temperature. The following chapter gives some practical examples.

PRACTICAL EXAMPLES

9 TEMPERATURE DERATING

An LED can only be consistently run at full power if the heat sinking is adequate and the ambient temperature stays within reasonable limits. If the LED base-plate temperature rises too high, then measures must be taken to reduce the internal power dissipation.

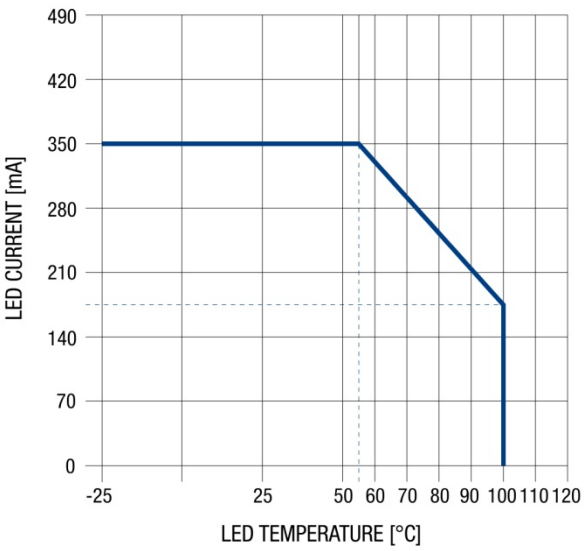

Graph 5: Typical LED temperature derating curve

Graph 5 shows an ideal LED current verses temperature relationship. Up to the manufacturer's specified maximum operating temperature, the LED current remains constant. As the LED temperature exceeds the limit, the current and therefore the power is reduced and the LED dimmed to protect it from overheating. This curve is called a "Derating Curve" and keeps the LED working within its safe power dissipation limits. The 55°C "threshold" temperature in the above graph is the base plate or heat sink temperature – the LED itself will be typically 15°C warmer (i.e. 70°C) and the internal junction temperature close to 35°C warmer (i.e. 90°C). Thus 55°C is thus a safe full power limit, although it could be increased to a maximum of 65°C for high performance LED lamps.

Adding automatic thermal derating to an LED driver:

If the LED driver has a dimming input, then we can easily add an external temperature sensor and some external circuitry to recreate the desired derating characteristic as shown in Graph 1.

The RCD-24 series LED driver from Recom has two different dimming inputs and so is an ideal candidate to explain the different ways in which over-temperature protection can be added to an LED driver circuit.

Over-temperature Protection using a PTC Thermistor:

A thermistor is a resistor that changes its value with temperature. If the resistance increases with increasing temperature, it has a positive temperature coefficient (PTC). It is possible to obtain PTC thermistors with a very non-linear characteristic (Graph 6).

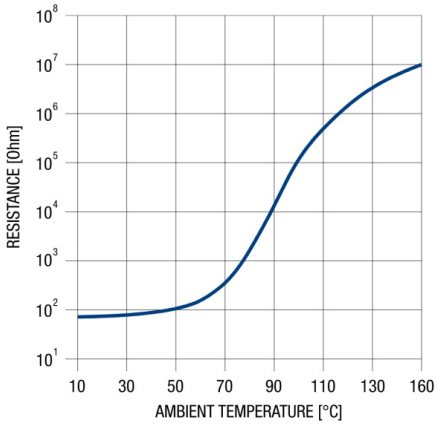

As long as the temperature stays below a given threshold, in this case 70°C, the PTC thermistor has a relatively stable low resistance in the order of around one hundred ohms. Above this threshold, the resistance increases very rapidly: at 80°C the resistance is 1kOhm; at 90°C it is 10kOhm and at 100°C, it is 100kOhms.

Usefully, many PTC thermistors are also available pre-assembled to a mounting lug that can be very easily attached to the heat-sink casing of the LED lamp to monitor the temperature.

Graph 6: Typical PTC thermistor resistance / temperature curve

We can use this response to make a very simple, low cost and reliable over-temperature protection circuit using the analogue dimming input of the RCD-24 series LED drivers (Figure 12 and Graph 7).

The analogue dimming input is controlled by an external voltage and so if the input voltage is fixed, a PTC thermistor plus a two voltage divider resistors are the only additional components required to implement an automatic temperature derating function.

If different derating temperature points are required, PTC thermistors are available with different threshold temperatures in 10°C steps from 60°C to 130°C, so it is simply a matter of selecting the right part to match the specification of the LED. If the input voltage is variable, then a zener diode or linear regulator could be added to provide a stable reference voltage.

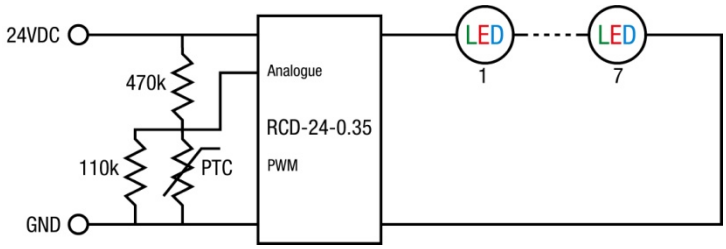

Fig. 12: PTC Thermistor circuit

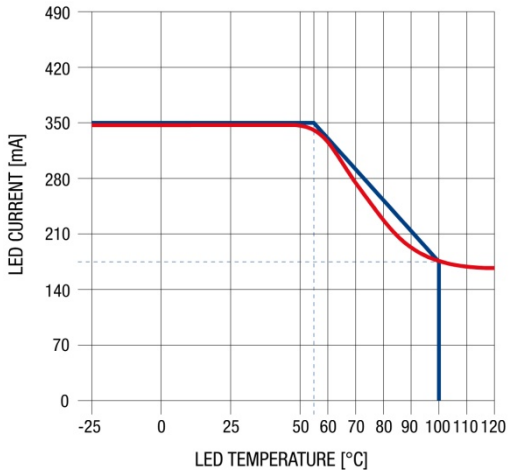

Graph 7: Resulting LED derating curve (red line)

Over-temperature protection using an analogue temperature sensor IC:

There are many IC temperature sensors available that provide a linear output with temperature. They do not cost much more than PTC thermistors and have the advantage that the linearity and offsets are very accurate, so temperature monitoring with <1°C resolution is possible. The output needs to be amplified in order to generate a useful control signal voltage, so they are most often used with an operational amplifier stage.

The circuit suggestion below (figure 2, 3 and 4) uses a common temperature sensor IC and operation amplifier. Similar products are available from a wide range of manufacturers. The output of the circuit is fed into the analogue voltage dimming input of the RCD driver series. This control input linearly dims the LED brightness according to the voltage present on the pin.

In the circuit below, the temperature sensor delivers a linear output voltage depending on its ambient temperature. The output is pre-calibrated to give 10mV/°C + 600mV, so at 55°C the output voltage will be 1.15V. The operation amplifier block contains two low power op-amps and a precision 200mV voltage reference. The offset adjustment preset adjusts the offset to 1.15V and the gain is set so that at 100°C, the LED is running at 50% nominal current. The advantage of this circuit is that only one design is needed to compensate for different LED characteristics from different manufacturers as the corner point of the derating curve is adjustable.

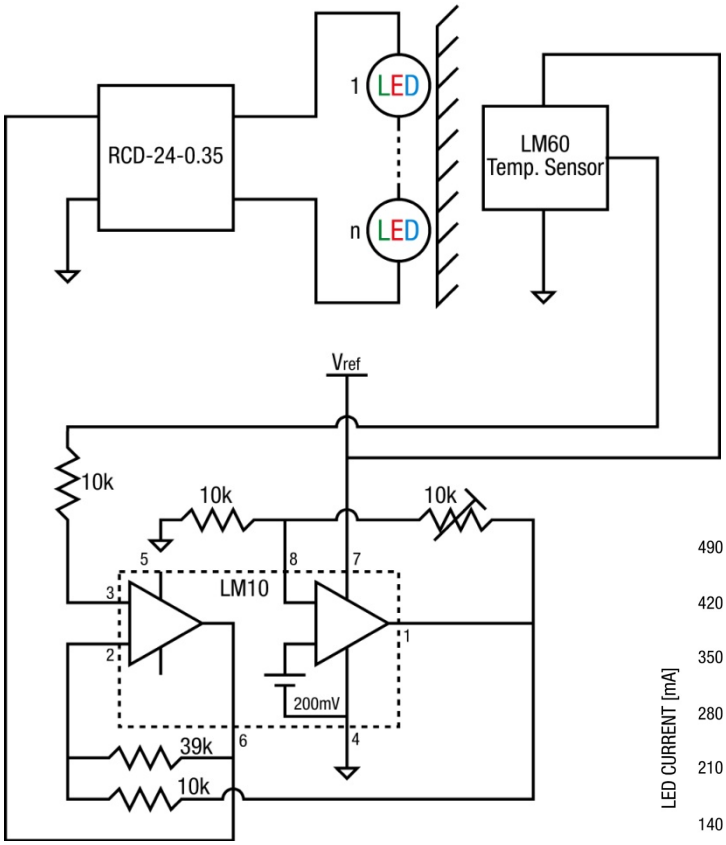

Fig. 13: Analogue over-temperature circuit

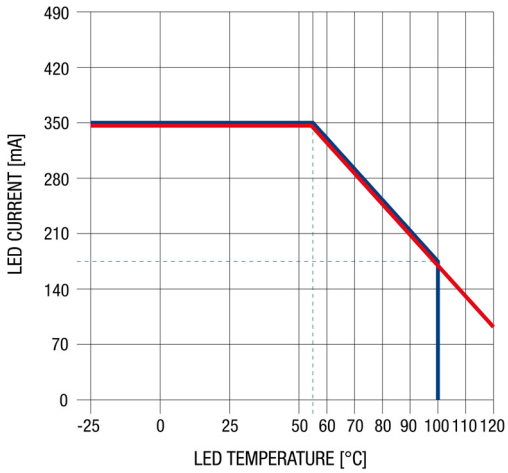

Graph 8: Resulting LED derating curve (red line)

Over-temperature protection using a Microcontroller:

The second dimming input possibility of the RCD series is the PWM input. Pulse width modulation uses a digital control signal to alter the brightness of the LED by switching it on and off too rapidly for the eye to see. If the LED spends more time off than on, it will appear dim. If the LED spends more time on than off, it will appear bright. The PWM input responds to logic level inputs, so is ideal for interfacing to digital controllers.

There are some ICs that will directly convert a temperature to a PWM signal (e.g. some fan controllers, MAX6673, TMP05, etc) but some built-in intelligence is normally required to set the threshold temperature and to match the PWM signal with the derating curve of the LED. Therefore it is often simpler to use a microcontroller.

The circuit suggestion below (figure 14) uses a microcontroller to monitor and control up to eight LED drivers. As only six I/O pins are used, the circuit could be easily expanded to control more LED drivers or a remote over-temperature alert could be added using the free ports.

In this example, temperature sensing is realized via MAX6575L/H ICs which are low power temperature sensors. Up to eight temperature sensors can share a three-wire interface. Temperatures are sensed by measuring the time delay between the microprocessor initiated trigger pulse and the falling edge of the subsequent pulse delays reported from the devices. Different sensors on the same I/O line use different timeout multipliers to avoid overlapping signals. A similar design could just as easily be built with other temperature sensors from different manufacturers– the TPM05 in daisy chain mode, for example.

The low power 74HC259 addressable latch can be reset with a reset pulse, so turning all LED drivers on. The microprocessor then can individually set each output after an appropriate time delay to generate eight PWM signals to independently control each LED driver.

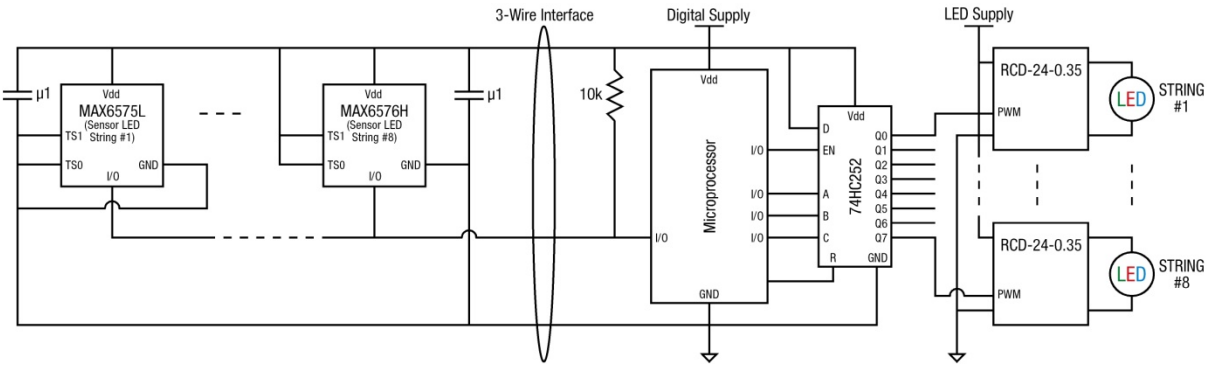

Fig. 14: Microprocessor-based PWM controller for up to eight LED drivers

Alternatively, if the microcontroller has a I²C interface, there are a number of useful programmable PWM generators available (e.g. PCA9635)

10 BRIGTHNESS COMPENSATION

Just as temperature sensing can be used in a control loop to keep the LED temperature constant, a light sensor can be used to keep the light output of the LED constant.

All LEDs lose lumen efficiency over time:

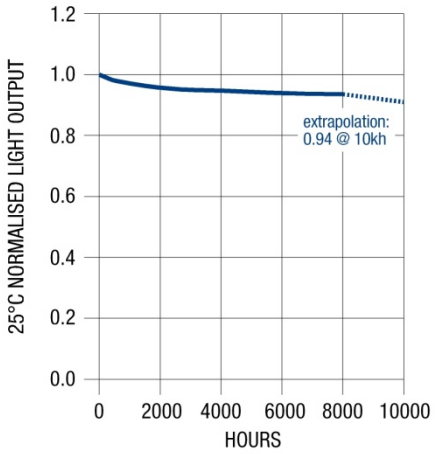

Graph 9: Light Output Loss over time

Therefore if an LED lamp is fitted in a room and then an identical lamp added two months later, the new lamp will be almost 5% brighter.

A solution to this problem is to derate the light output to 95% using a light sensor such as a photodiode In the example shown in Figure 15. The photodiode leads must be kept short to avoid introducing too much noise into the circuit. Rf should be chosen so that when the LED lamp is new that the output voltage of the ICL7611 rail-to-rail op amp is about 200mV.

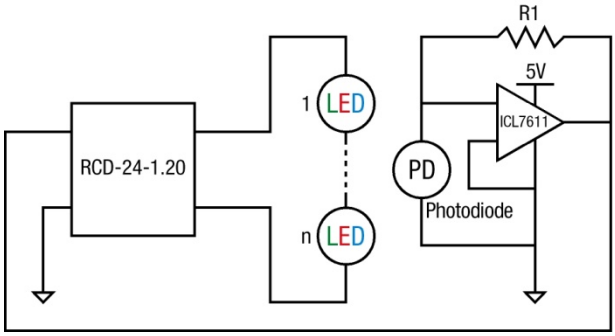

Fig. 15: Light sensor feedback circuit

As the LED loses luminous flux efficiency over time, the feedback circuit will automatically increase the LED current to compensate. The circuit idea shown in Figure 15 can be modified if both a stable maximum light output and a dimming is required. The RCD series LED driver is fairly unique in having two dimming inputs which can both be used at the same time. Thus the analogue dimming input can be used for LED brightness compensation while the PWM input can be used to independently dim the LEDs.

Figure 16 shows a circuit idea that uses a track-and-hold technique to store the brightness compensation feedback voltage level while the LED is on but ignores the level when the LED is off. Thus the feedback voltage presented to the RCD is independent of the PWM dimming input.

A slight delay formed by the 10k resistor and 10n capacitor makes sure that the reaction time of the LED driver output is taken into account before the op amp output voltage is sampled and stored on the 470n capacitor.

The exact component values may need to be optimised for individual applications.

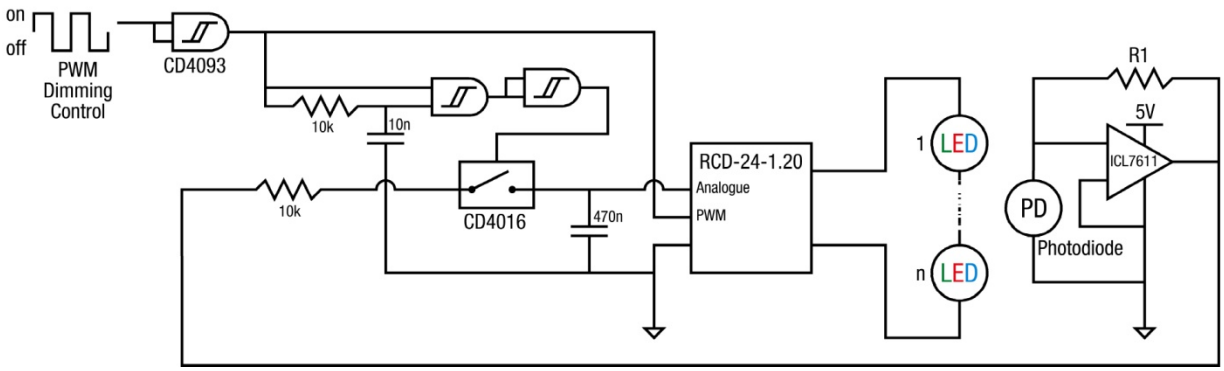

Fig. 16: Dimmable light sensor feedback circuit

Another common application for optical feedback is an ambient light sensor. The idea is not to have a constant LED light output but to measure the ambient light levels and to dim the LEDs down during bright daylight and then gradually increase the LED brightness as dusk falls to maintain a constant luminous flux.

A common low cost light sensor is a LDR or light dependent resistor. This has linear response to the natural log of the light level ($R = Lux * e^{-b}$) and can be easily used with some biasing resistors to set the required ambient light level.

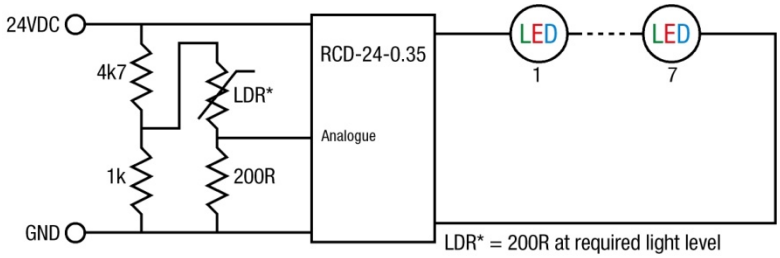

Fig. 17: Ambient light sensor feedback circuit

11 SOME CIRCUIT IDEAS USING THE RCD DRIVER

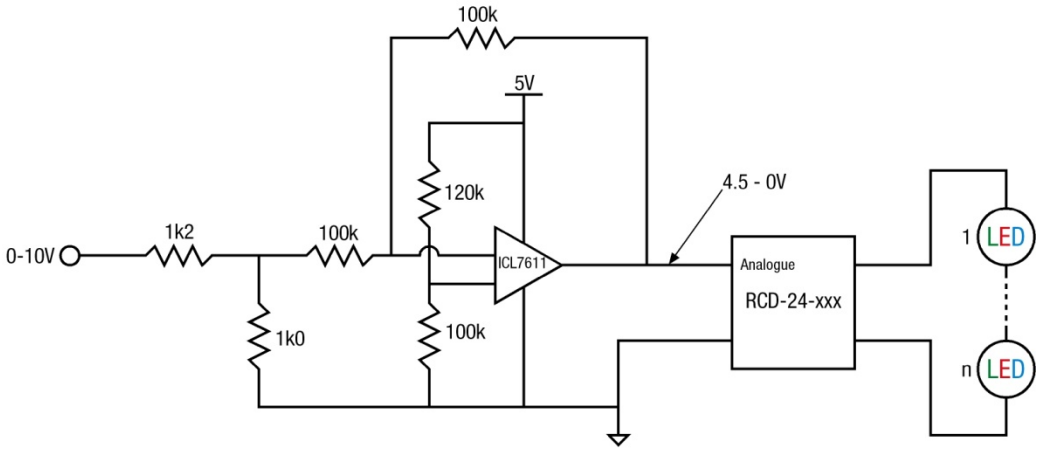

Fig. 18: 0 - 10V Dimming Control (0 = 0%, 10V = 100%)

How it works:

The rail-to-rail op amp is configured as an inverting amplifier. The non inverting input is held at a "virtual ground" voltage of 2.25V by the 120k and 100k resistor divider chain. If the input voltage is 0V, then the op amp voltage must be 4.5V to make the inverting input voltage also 2.25V. If the input voltage is 10V, then the input voltage divider of 1k2 and 1k0 drops the input voltage as seen by the amplifier to 4.5V. Only if the output voltage is 0V will the inputs to the op amp balance.

A minor modification of this circuit permits 1 – 10V control voltages.

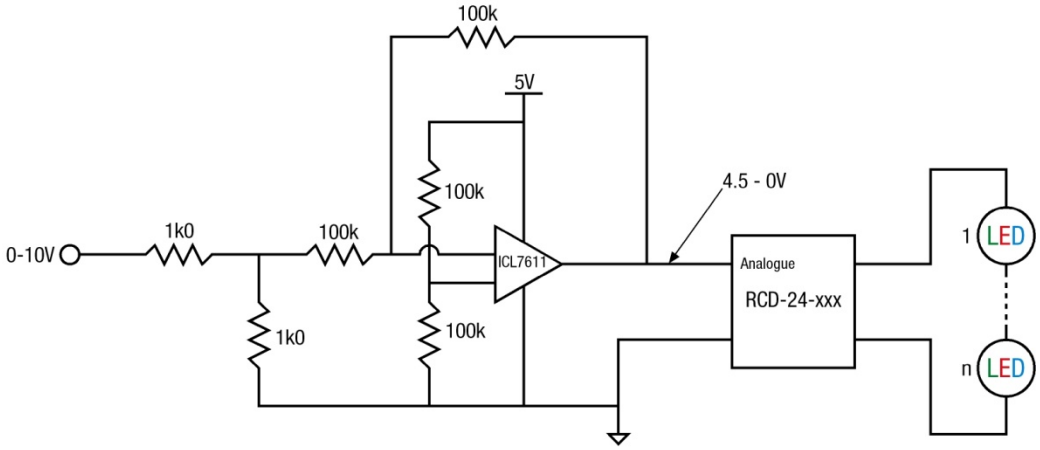

Fig. 19: 1 - 10V Dimming Control (1 = 0%, 10V = 100%)

How it works:

The rail-to-rail op amp is configured as an inverting amplifier. The non inverting input is held at a virtual ground voltage of 2.5V by the 100k resistor divider chain. If the input voltage is 1V, then the 1k0 input voltage divider drops the input voltage as seen by the amplifier to 0.5V. Only if the output voltage is 4.5V will the inputs to the op amp balance. If the input voltage is 10V, then the input voltage divider drops the input voltage as seen by the amplifier to 5V. Only if the output voltage is 0V will the inputs to the op amp balance.

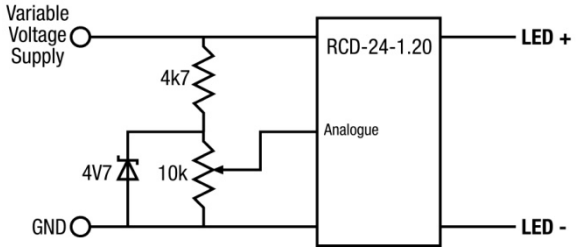

Fig. 20: Simple Potentiometer (Rheostat) Dimmer

How it works:

If the input voltage is not stabilized (for example, it is a battery), then the dimming input voltage needs to be regulated. A simple Zener diode is all that is required, although a 5V regulator could also be used if a very accurate dimming control is needed.

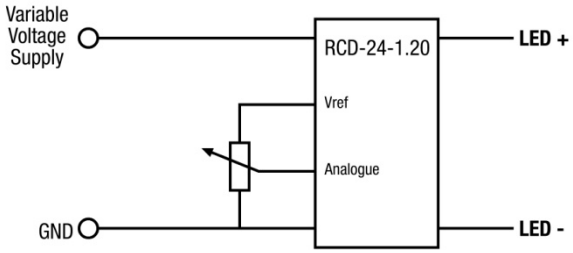

Fig. 21: Accurate Potentiometer (Rheostat) Dimmer

PWM to Analogue:

The analogue dimming input can also be used with a PWM input. This avoids the maximum frequency limit on the PWM input and is useful for microcontrollers that have PWM outputs based on internal timers and cannot easily output low frequency PWM signals.

The disadvantage of this method is that the reaction time of the LED output to a change in dimming level is slower, as the capacitor has to be charged or discharged to the new average input voltage level.

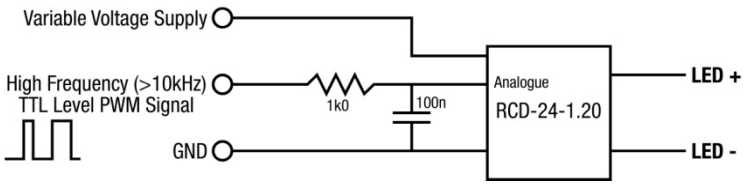

Fig. 22: PWM to Analogue Dimming Control

Manual control PWM generators:

PWM signals have the advantage that the signals can be sent over very long distances without loss and that they are largely immune to external interference.

It is sometimes useful to have a manual control (e.g. potentiometer) of the PWM mark-space ratio rather than generate the signal digitally.

The following two circuits are examples of simple, general purpose PWM generators for the RCD series:

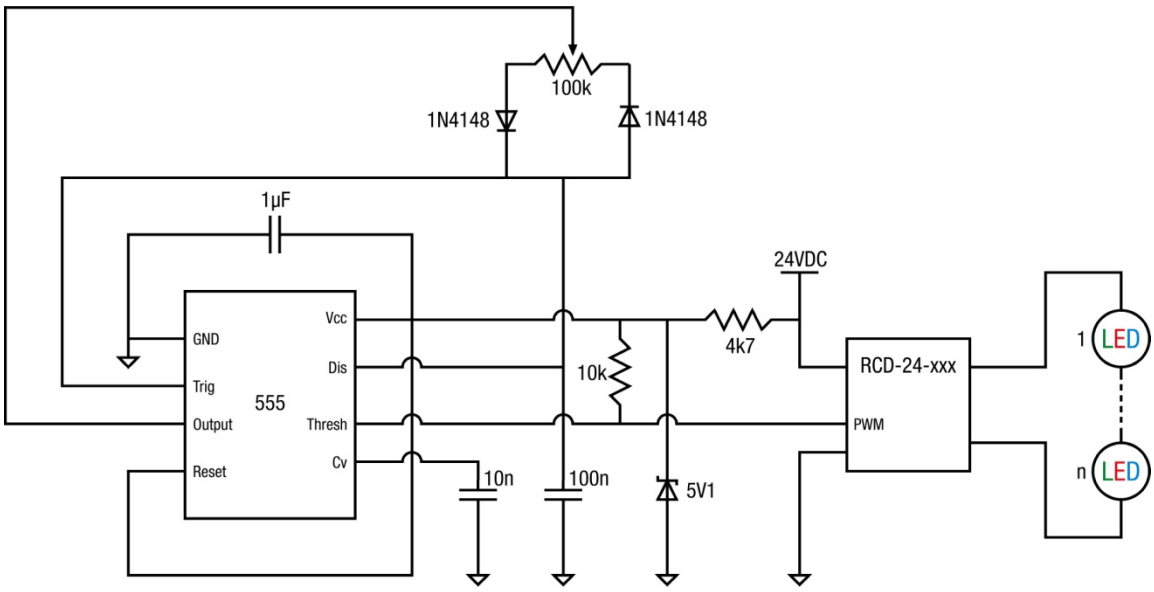

Fig. 23: 555-based PWM generator (Potentiometer Control)

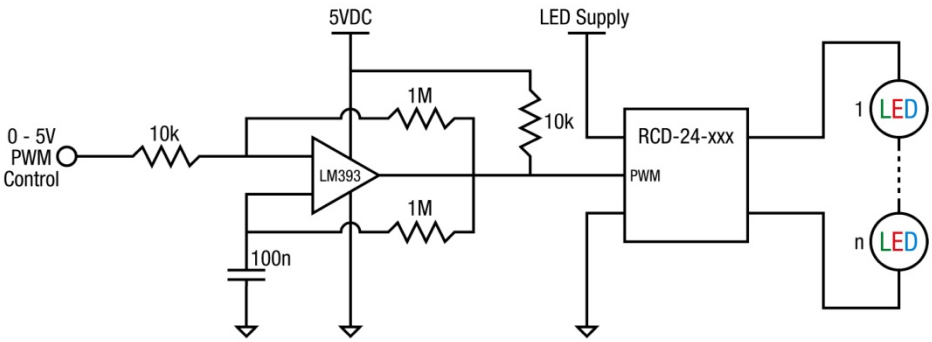

Fig. 24: Comparator-based PWM generator (Potentiometer or Voltage Control)

Switching LED Strings:

This application idea allows four strings of LEDs to be switched in and out of circuit with a 4-bit control signal without the active strings being over-driven.

The strings can also be independently dimmed if required using the PWM dimming input.

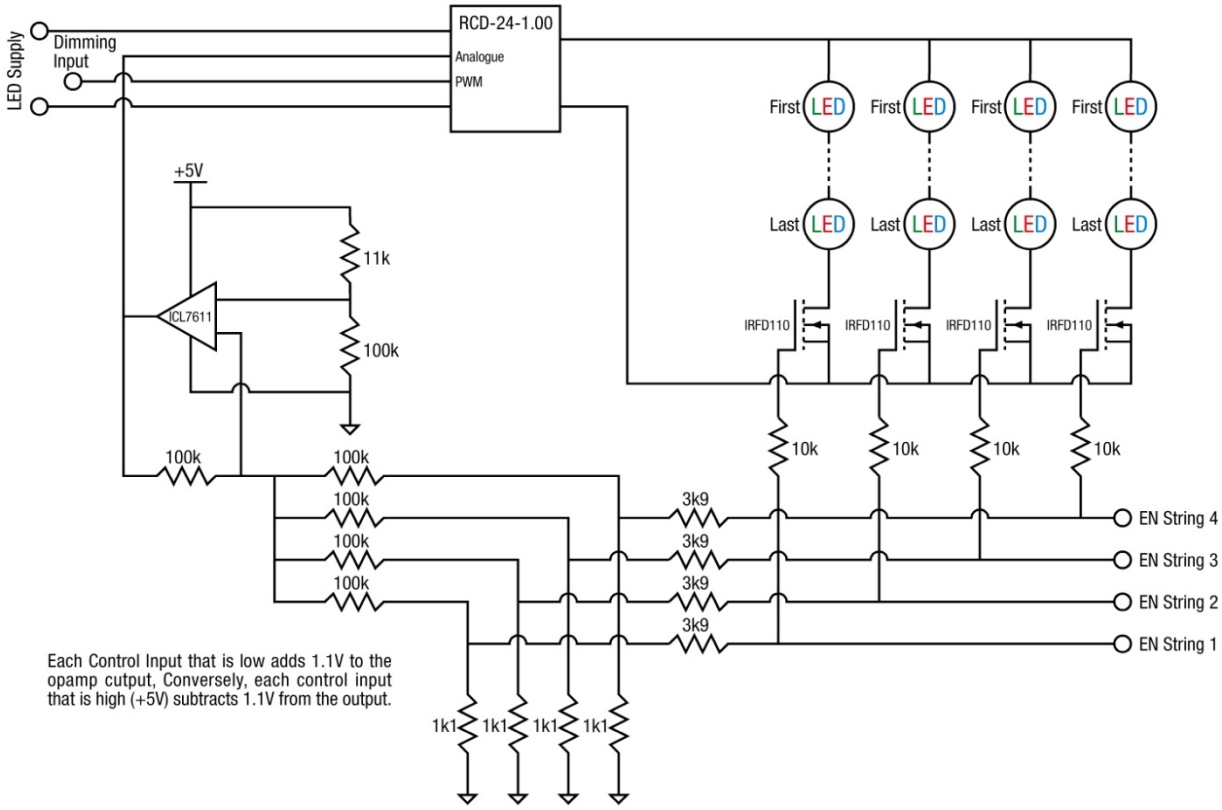

Fig. 25: Switchable LED Strings with LED current compensation

S1	S2	S3	S4	Op-amp Vout	LED current
0	0	0	0	4.4V	0mA
0	0	0	1	3.3V	250mA
0	0	1	0	3.3V	250mA
0	0	1	1	2.2V	500mA
0	1	0	0	3.3V	250mA
0	1	0	1	2.2V	500mA
0	1	1	0	2.2V	500mA
0	1	1	1	1.1V	750mA
1	0	0	0	3.3V	250mA
1	0	0	1	2.2V	500mA
1	0	1	1	1.1V	750mA
1	1	0	0	2.2V	500mA
1	1	0	1	1.1V	750mA
1	1	1	0	1.1V	750mA
1	1	1	1	0V	1000mA

Table 3: 4-Bit Controls

LED backlight:

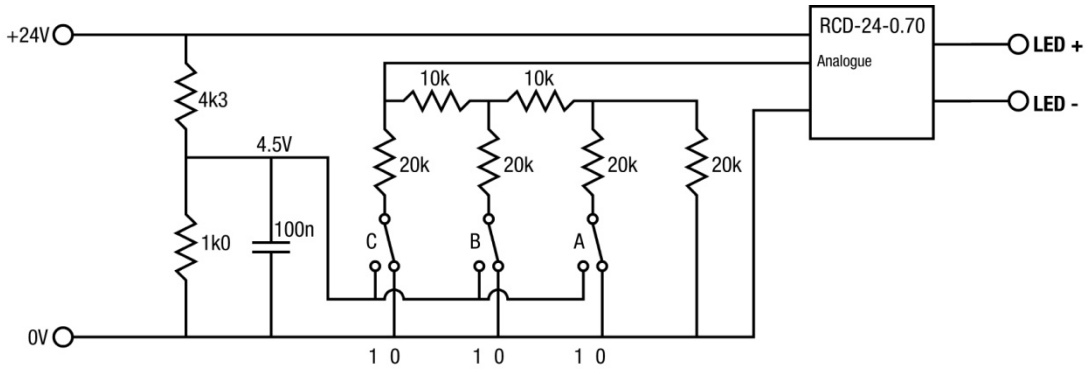

Fig. 26: LED backlight circuit

C	B	A	Ana. Input	LED current
0	0	0	0.00V	700mA
0	0	1	0.64V	600mA
0	1	0	1.28V	500mA
0	1	1	1.93V	400mA
1	0	0	2.25V	300mA
1	0	1	3.21V	200mA
1	1	0	3.86V	100mA
1	1	1	4.50V	000mA

Table 4: 3-Bit Binary Input

How it works:

The R2R ladder network converts the 3-bit binary input into an 8-stage control voltage.

The advantage of this circuit over the previous one is that it requires no active components and that the R2R ladder can be extended to any number of bits if a higher resolution is required. R2R networks are available as ready-made resistor network modules in a compact SIP format.

This kind of circuit is often used as a backlight controller as 8 levels of brightness are adequate for most backlight applications.

Emergency Light:

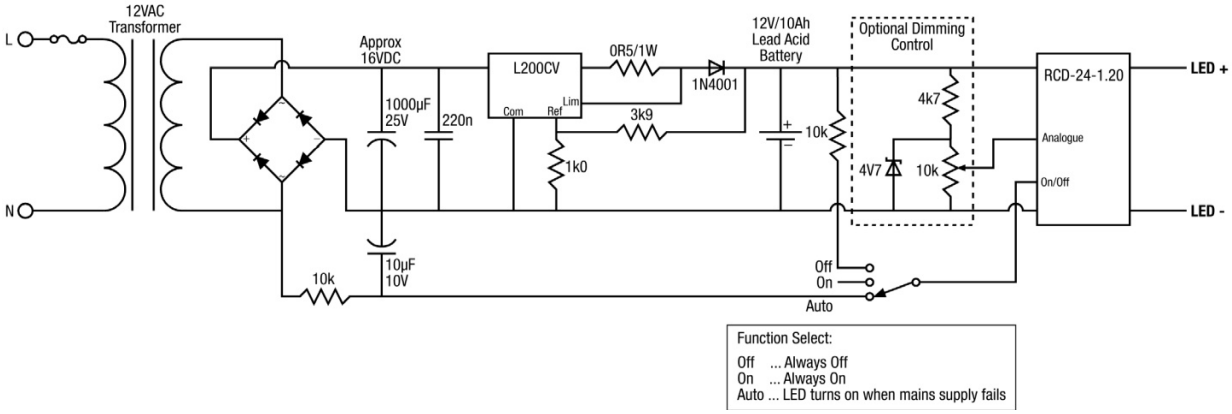

Fig. 27: This circuit uses a low voltage mains transformer to charge a lead acid standby battery.

A linear pre-regulator both limits the battery charging voltage and the maximum charging current to allow the same circuit to both recharge a flat battery and to trickle charge a fully charged battery. The LED driver can be switched to automatically turn on the LED lighting if the mains input fails.

How it works:

The 12VAC output from the transformer is rectified and smoothed to give about 16VDC input to the linear regulator. The regulator is set to give 13.8V output at a maximum current of 1A to charge the 12V lead acid battery. The diode in the output of the L200 stops a reverse current flowing through the regulator if the mains input is disconnected, but because the regulator reference input is taken after the diode, it has no effect on the output voltage.

The enable input of the RCD LED driver can be switched to three positions:

OFF The ON/Off input is pulled up to 12V via a high value resistor. This allows a 12V signal to control a 5V input. This method is chosen instead of a potential divider because the divider would discharge the battery over time,

ON The control input is left open, so the LEDs are ON by default.

AUTO As long as the mains input is active, the 12VAC output will be smoothed by the 10k and 10µF capacitor to give an average voltage of around 6VDC which inhibits the LED driver. When the mains fails or is disconnected, this average falls to zero and the driver is activated.

Simple RGBW Mixer:

The RGB mixer application circuit given in the Recom datasheet can be easily extended to include RGBW LEDs.

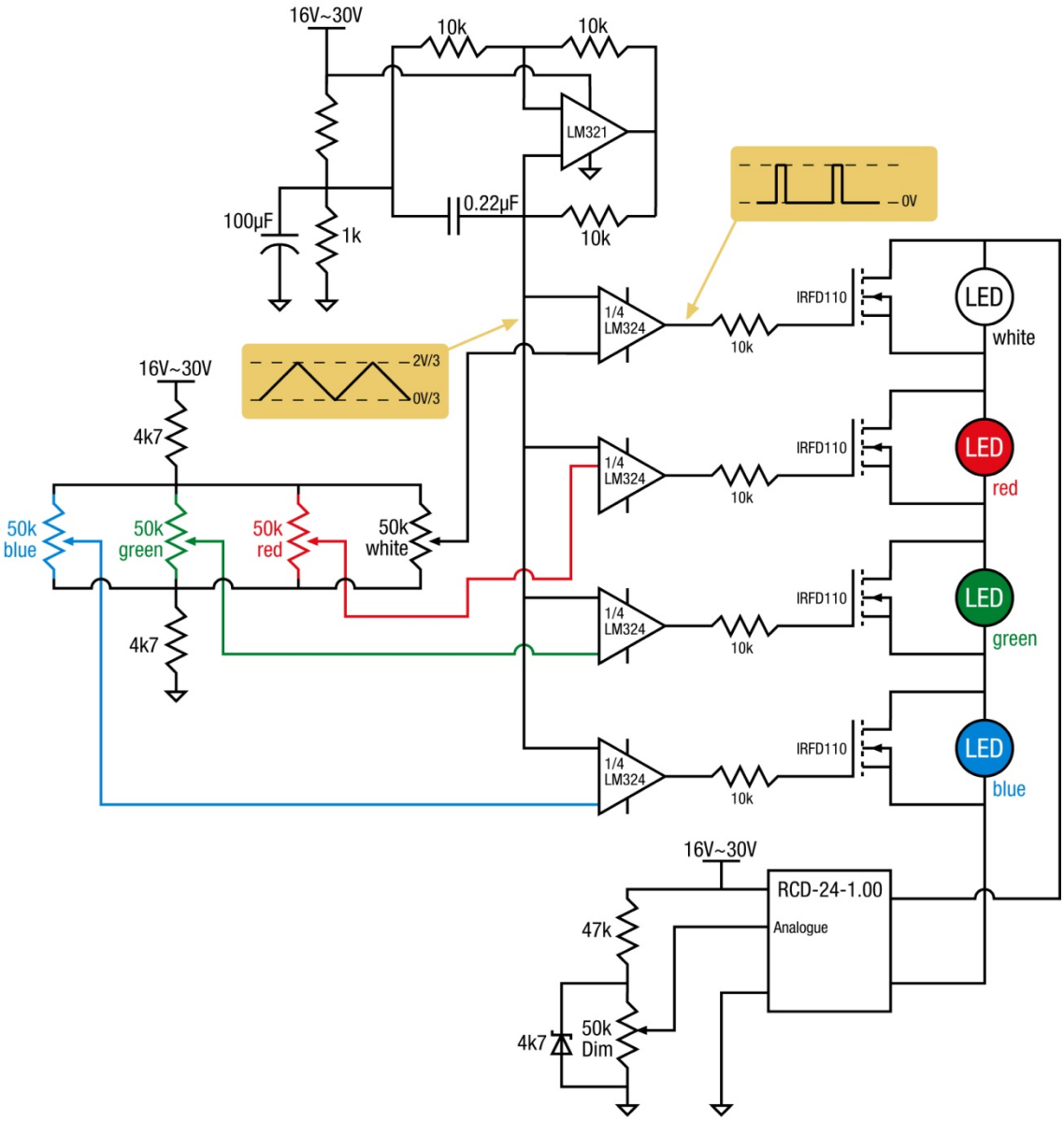

Fig. 28: RGBW Mixer

Simple Phase Angle Dimmable LED Driver:

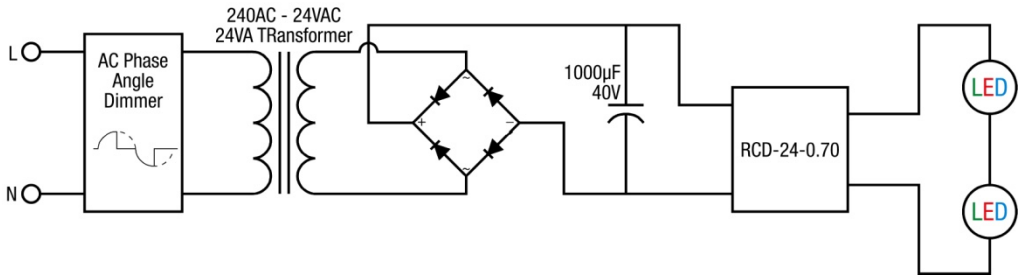

Fig. 29: AC Phase Angle Dimmable LED Driver

How it works:

The transformer drops the mains input voltage down to low AC voltage and provides safety isolation. The 24VAC output is then rectified and smoothed to generate a DC voltage. With the dimmer turned full on, the load pulls the DC voltage down to about 26V. If the load is carefully chosen, e.g. 7 LEDs, they will need a typical forward voltage of 24V, so there is just enough headroom for the driver to correctly regulate the output current to 700mA. As the input is phase angle dimmed, the input voltage drops and the output voltage with it. The LEDs dim too. The circuit continues to function even at very low dimming levels.

The dimming curve is not linear, but for many low cost applications, this is not so important. It is also important to match the LED load to the input voltage to get the maximum dimming range.

The linearity can be improved and the circuit made load independent by adding an active dimming control that measures the input voltage and generates a dimming control voltage to match. However, the cost is then significantly higher.

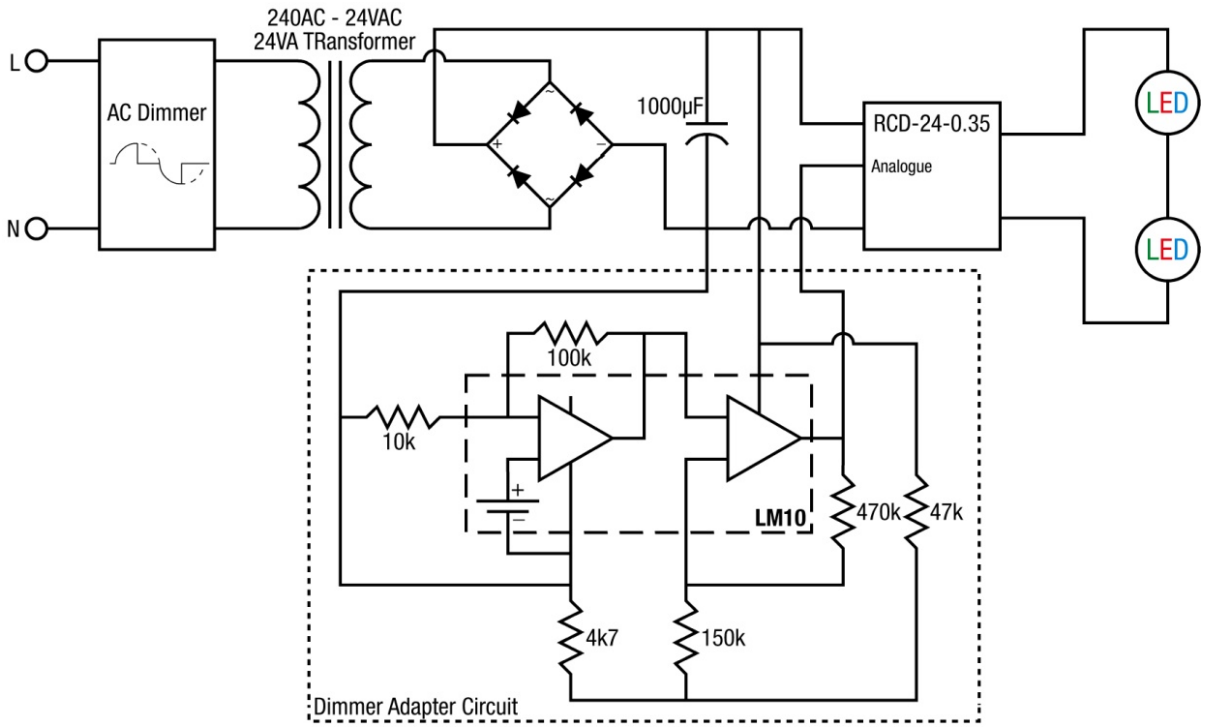

Fig. 30: Dimmable LED Driver with Dimmer Adapter Circuit

12 ABOUT RECOM

We offer constant current dimmable LED-Drivers, DC/DC-Converters, Switching Regulators, and single, dual, and triple output AC/DC-Modules as standard catalogue products for quick delivery. Their main markets are Industrial Controls, Lighting, Medical, Military (COTS) and Telecommunications, although their converters are used in virtually every industry requiring low-to-medium DC voltage conversion in the 0.25 to 60 watt range. For additional information about RECOM and its award-winning products, please contact us or visit our website.

RCD-24 SERIES

RCD-24

RCD-24/W

RCD-24/W-Vref

RCD-24/OF

RCD-24-PL

The RCD family offers a variety of DC input LED driver modules with constant current output from 300mA up to 1200mA. The modules have a comprehensive specification, such as: high efficiency (up to 96%), wide input voltage range (4.5 – 36 VDC), very low output dropout voltage (2 – 35 VDC), 2 independent dimming options (PWM and 0-10 Analogue), MTBF up to 600,000 hours, 3 possible packages (through hole, wired and SMD), and all drivers are CE and UL certified (EN60950-1 & UL60950-1).

Further Advantages:

- All in one - no need for external components
- 2 independent dimming options that can be used at the same time
- RCD-24/W suitable for outdoors/underwater applications (IP67)
- High efficiency over a wide range of LED loads
- Buck topology
- Short Circuit Protection
- First SMD DC LED driver module in the market (RCD-24-PL)
- Extremely low profile (RCD-24-PL with only 6.6mm)
- Ambient temperature range -40°C to +85°C
- Built-in Class A or Class B EMC Filter
- Rheostat (Potentiometer) dimming option (RCD-24/W-Vref)
- 5 years warranty

Typical Applications:

Architectural Lighting || Decorative Lighting || Theatrical Lighting (Stage Lighting) || LED Displays || Outdoor Lighting || Freezer Lighting || Underwater and Marine Applications || Cabinet Lighting || Backlight LED || Solar Powered Lighting || Fluorescent Replacement || Landscape Lighting || and many more …

For more details please contact us or visit our website:

RECOM Electronic GmbH || Tel +49 6103 30007-0 || info@recom-electronic.com || www.recom-electronic.com