US008872437B2

(12) **United States Patent**
Esaki et al.

(10) **Patent No.: US 8,872,437 B2**
(45) **Date of Patent: Oct. 28, 2014**

(54) **LIGHTING APPARATUS AND ILLUMINATING FIXTURE WITH THE SAME**

(71) Applicant: **Panasonic Corporation**, Osaka (JP)

(72) Inventors: **Sana Esaki**, Osaka (JP); **Akinori Hiramatu**, Nara (JP)

(73) Assignee: **Panasonic Corporation**, Osaka (JP)

(*) Notice: Subject to any disclaimer, the term of this patent is extended or adjusted under 35 U.S.C. 154(b) by 211 days.

(21) Appl. No.: **13/692,003**

(22) Filed: **Dec. 3, 2012**

(65) **Prior Publication Data**

US 2013/0141003 A1 Jun. 6, 2013

(30) **Foreign Application Priority Data**

Dec. 5, 2011 (JP) 2011-265720

(51) **Int. Cl.**
H05B 37/02 (2006.01)
H05B 33/08 (2006.01)

(52) **U.S. Cl.**
CPC ***H05B 37/02*** (2013.01); ***H05B 33/0815*** (2013.01); *Y02B 20/346* (2013.01)
USPC **315/224**; 315/297

(58) **Field of Classification Search**
USPC ..... 315/200 R, 224, 291, 297, 307
See application file for complete search history.

(56) **References Cited**

U.S. PATENT DOCUMENTS

6,580,309 B2 6/2003 Jacobs et al.
2001/0024112 A1 9/2001 Jacobs et al.
2003/0132721 A1 7/2003 Jacobs et al.
2010/0026208 A1 2/2010 Shteynberg et al.
2010/0141155 A1 6/2010 Hong et al.
2010/0148683 A1 6/2010 Zimmerman et al.
2010/0295478 A1 11/2010 Wei et al.
2011/0101877 A1 5/2011 Zhan et al.
2011/0109248 A1 5/2011 Liu
2013/0147356 A1 * 6/2013 Masumoto 315/121

FOREIGN PATENT DOCUMENTS

JP 2003-522393 A 7/2003
JP 2005-294063 A 10/2005

OTHER PUBLICATIONS

Extended European Search Report for corresponding European Application No. 12195190.9 dated Apr. 11, 2013.

* cited by examiner

Primary Examiner — Don Le
(74) *Attorney, Agent, or Firm* — Renner, Otto, Boisselle & Sklar, LLP

(57) **ABSTRACT**

The lighting apparatus in accordance with the present invention includes: a switching regulator including a switching element; and a control circuit configured to adjust a switching frequency and on-duration of the switching element in accordance with a dimming ratio. The control circuit is configured to, when the dimming ratio falls within a first dimming range, adjust the switching frequency to a frequency associated with the first dimming range and adjust the on-duration to duration corresponding to the dimming ratio. The control circuit is configured to, when the dimming ratio falls within a second dimming range, adjust the on-duration to duration associated with the second dimming range and adjust the switching frequency to a frequency corresponding to the dimming ratio.

13 Claims, 14 Drawing Sheets

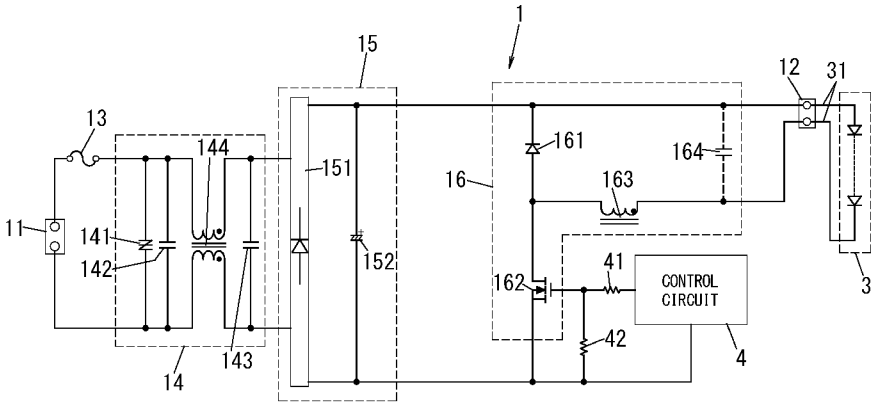

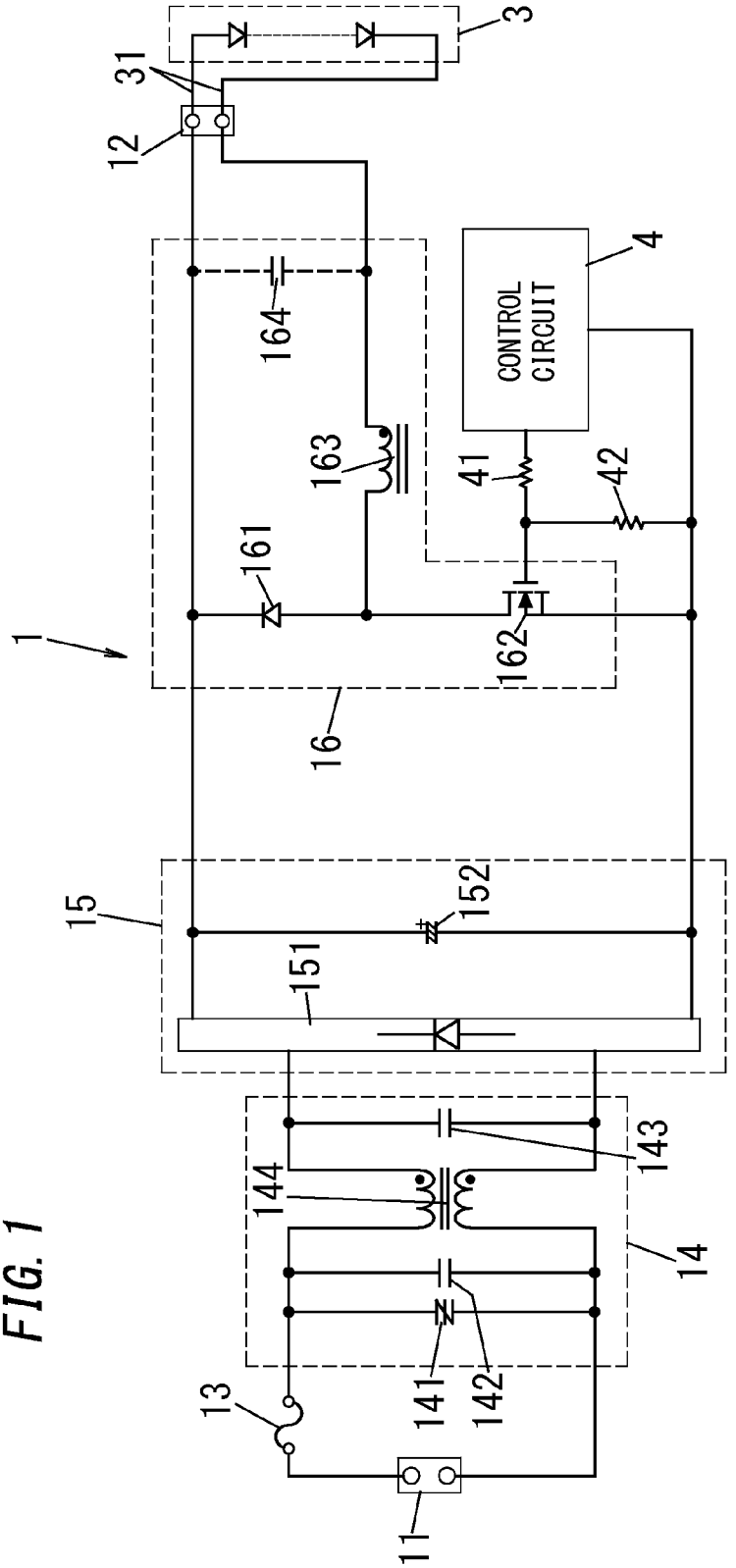
CONTROL CIRCUIT
1
3
4
11
12
13
14
15
16
31
41
42
141
142
143
144
151
152
161
162
163
164

FIG. 1

FIG. 2

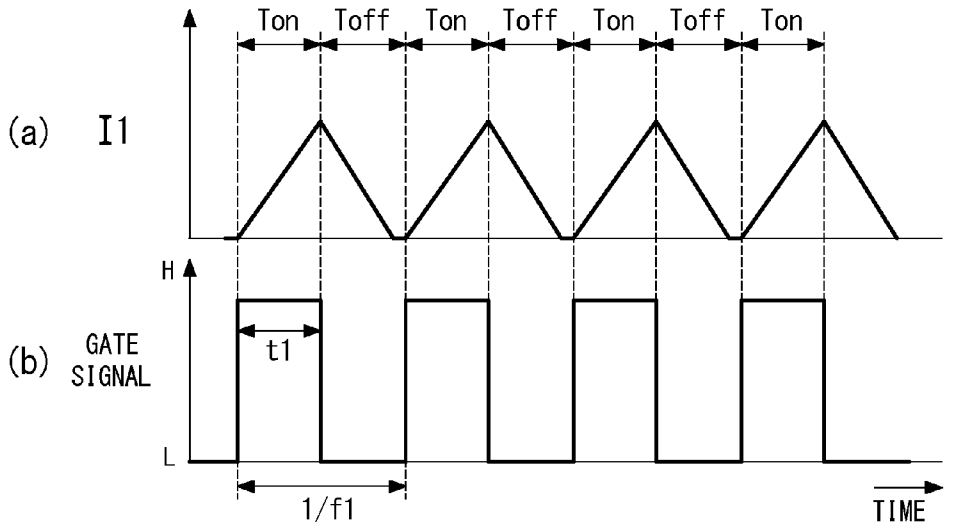
Ton
Toff
Ton
Toff
Ton
Toff
Ton
(a)
I1
H
(b)
GATE
SIGNAL
t1
L
1/f1
TIME

FIG. 3

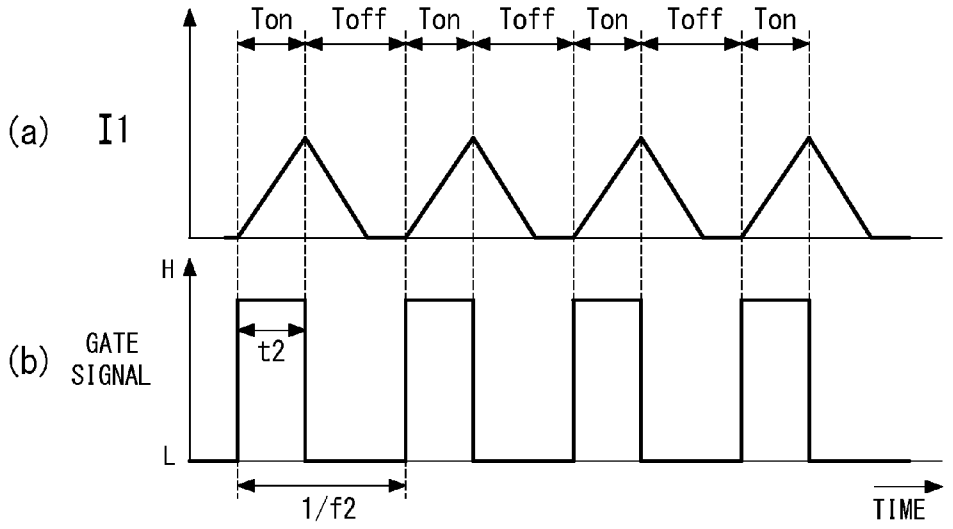
Ton
Toff
Ton
Toff
Ton
Toff
Ton
(a)
I1
H
(b)
GATE
SIGNAL
t2
L
1/f2
TIME

FIG. 4

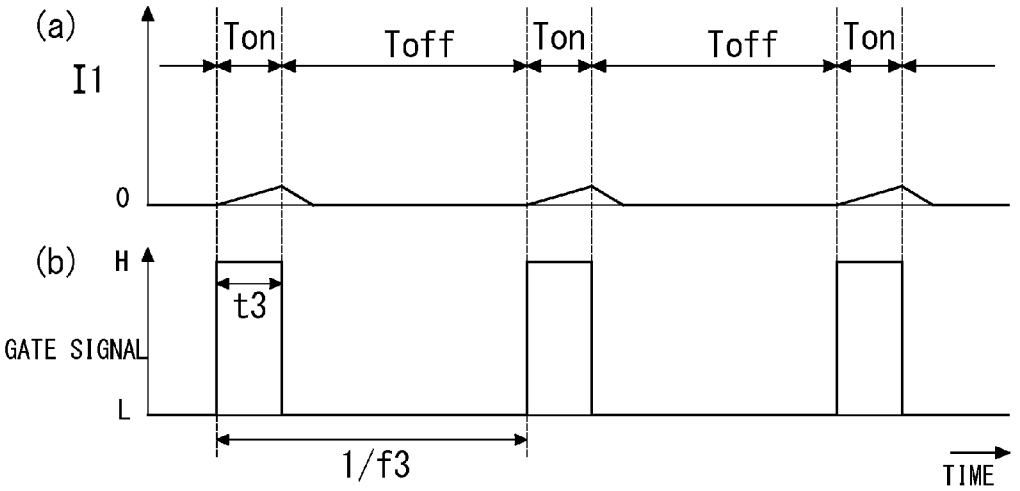
(a)
I1
Ton
Toff
Ton
Toff
Ton
0
(b)
H
t3
GATE SIGNAL
L
1/f3
TIME

FIG. 5

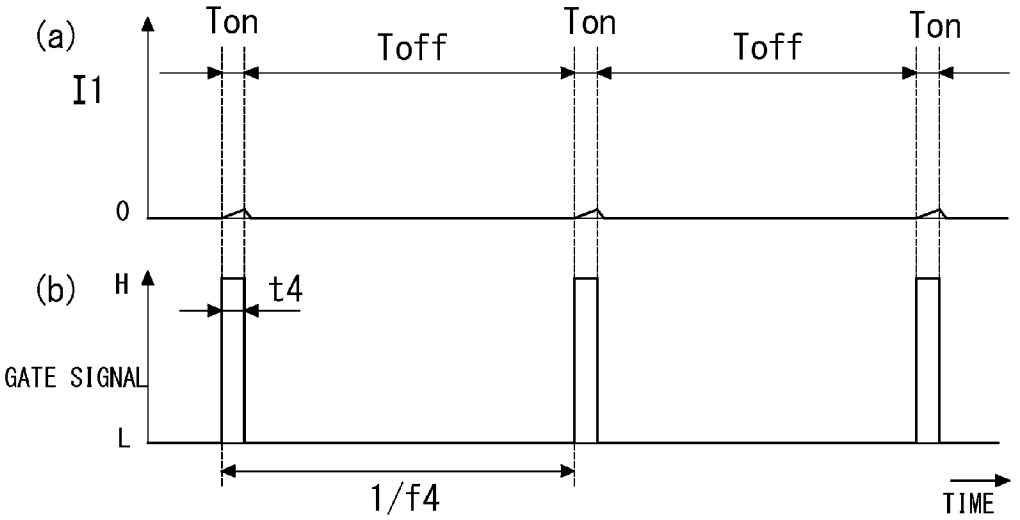
(a)
I1
Ton
Toff
Ton
Toff
Ton
0
(b)
H
t4
GATE SIGNAL
L
1/f4
TIME

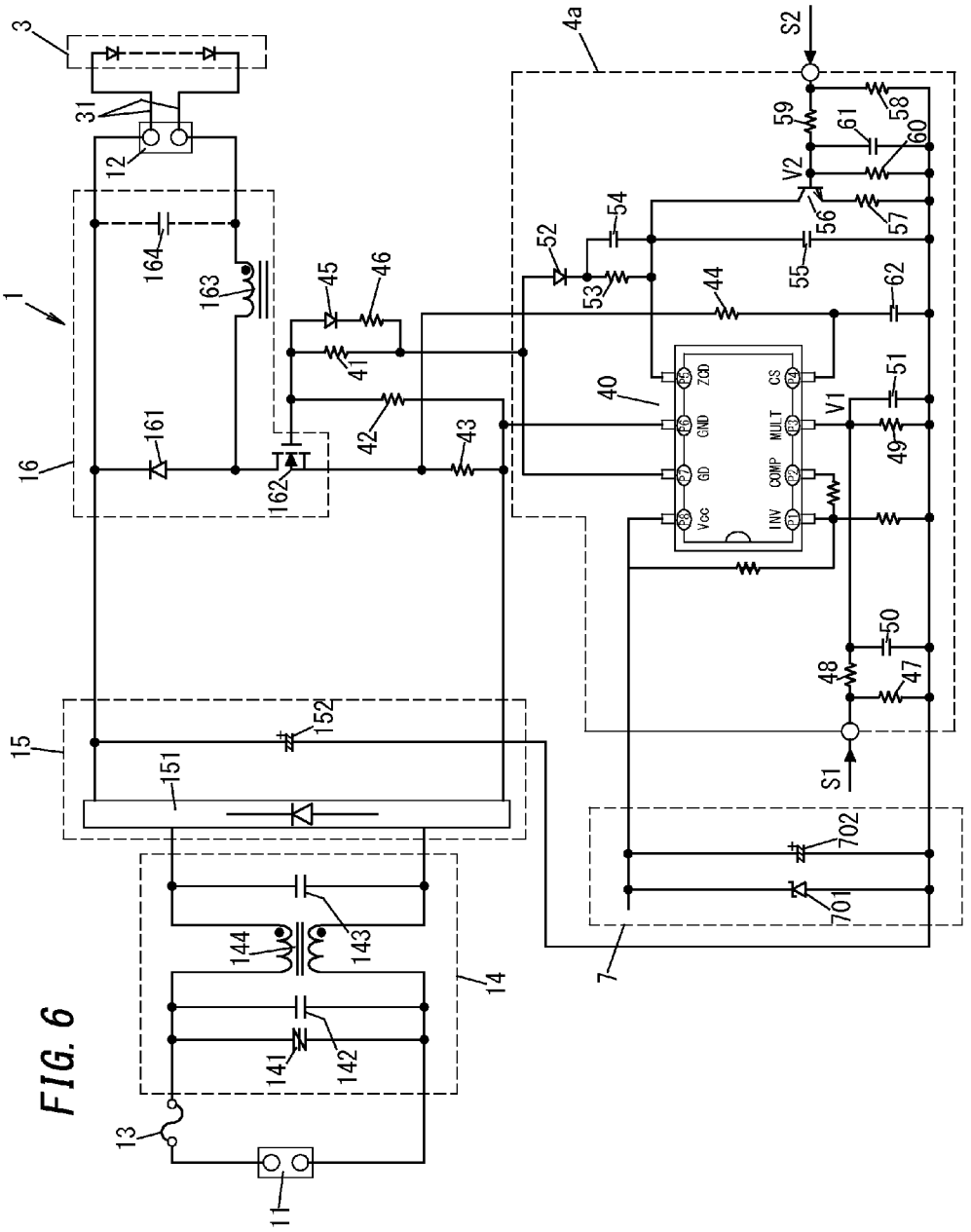
1
3
31
12
16
161
162
163
164
45
46
41
42
43
4a
S2
59
58
61
60
V2
56
57
52
54
53
55
44
62
40
ZCD
CS
GND
MULT
GD
COMP
Vcc
INV
51
V1
49
50
48
47
S1
15
152
151
702
701
7
14
144
143
141
142
13
11

FIG. 6

FIG. 7

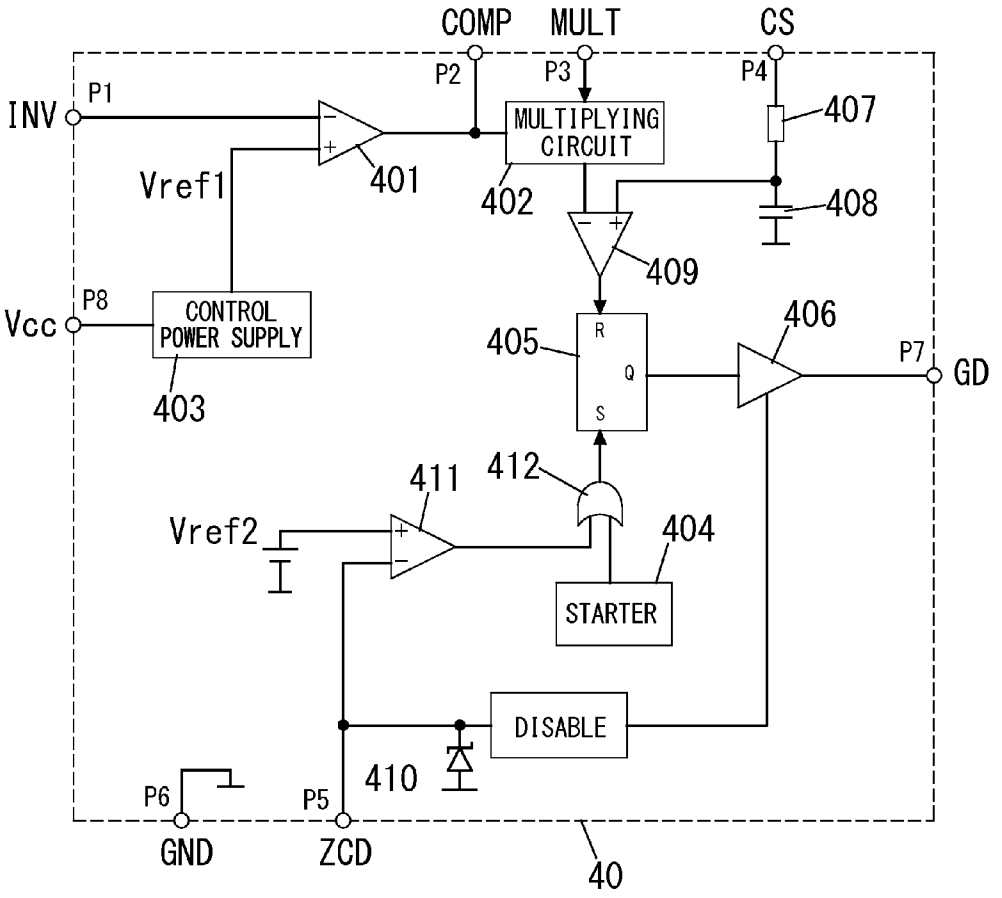
COMP
MULT
CS
P1
P2
P3
P4
INV
MULTIPLYING CIRCUIT
407
Vref1
401
402
408
409
P8
Vcc
CONTROL POWER SUPPLY
405
R
Q
S
406
P7
GD
403
411
412
Vref2
404
STARTER
DISABLE
410
P6
P5
GND
ZCD
40

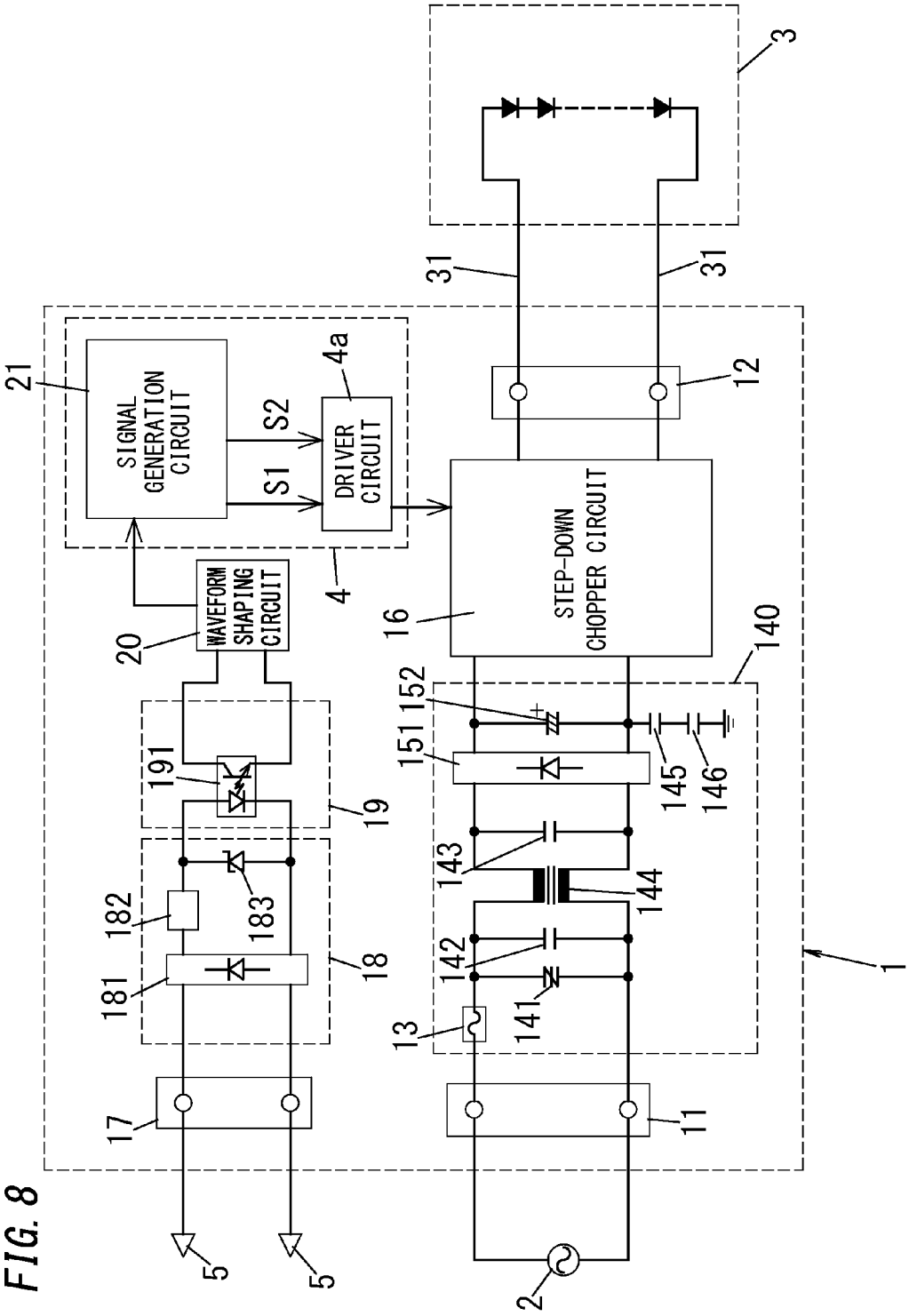
SIGNAL GENERATION CIRCUIT
DRIVER CIRCUIT
WAVEFORM SHAPING CIRCUIT
STEP-DOWN CHOPPER CIRCUIT
S1
S2
1
2
3
4
4a
5
11
12
13
16
17
18
19
20
21
31
140
141
142
143
144
145
146
151
152
181
182
183
191

FIG. 8

FIG. 9

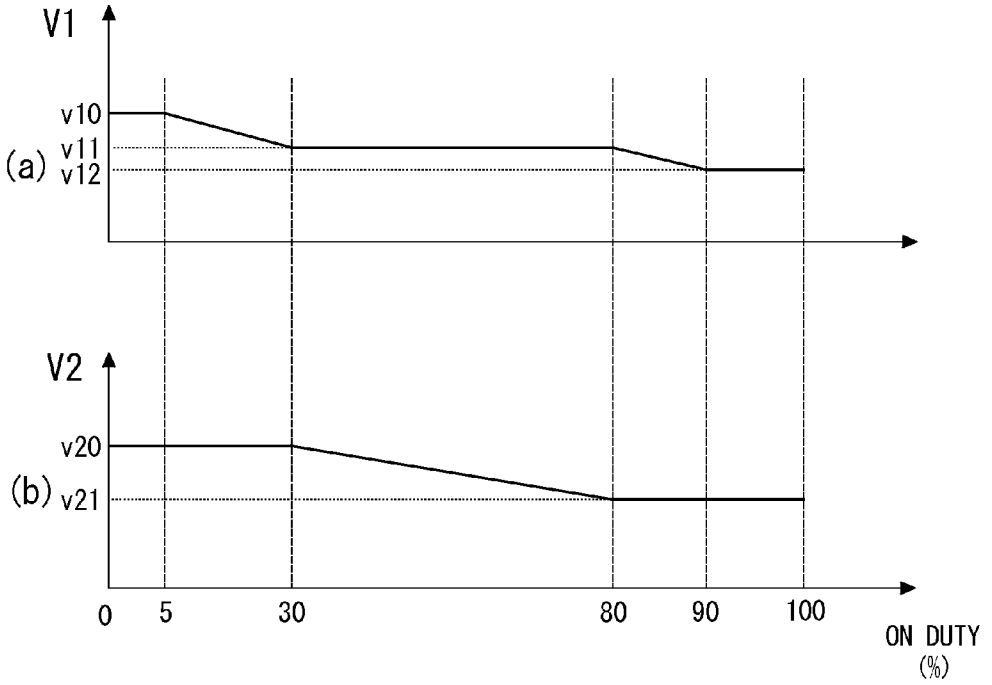

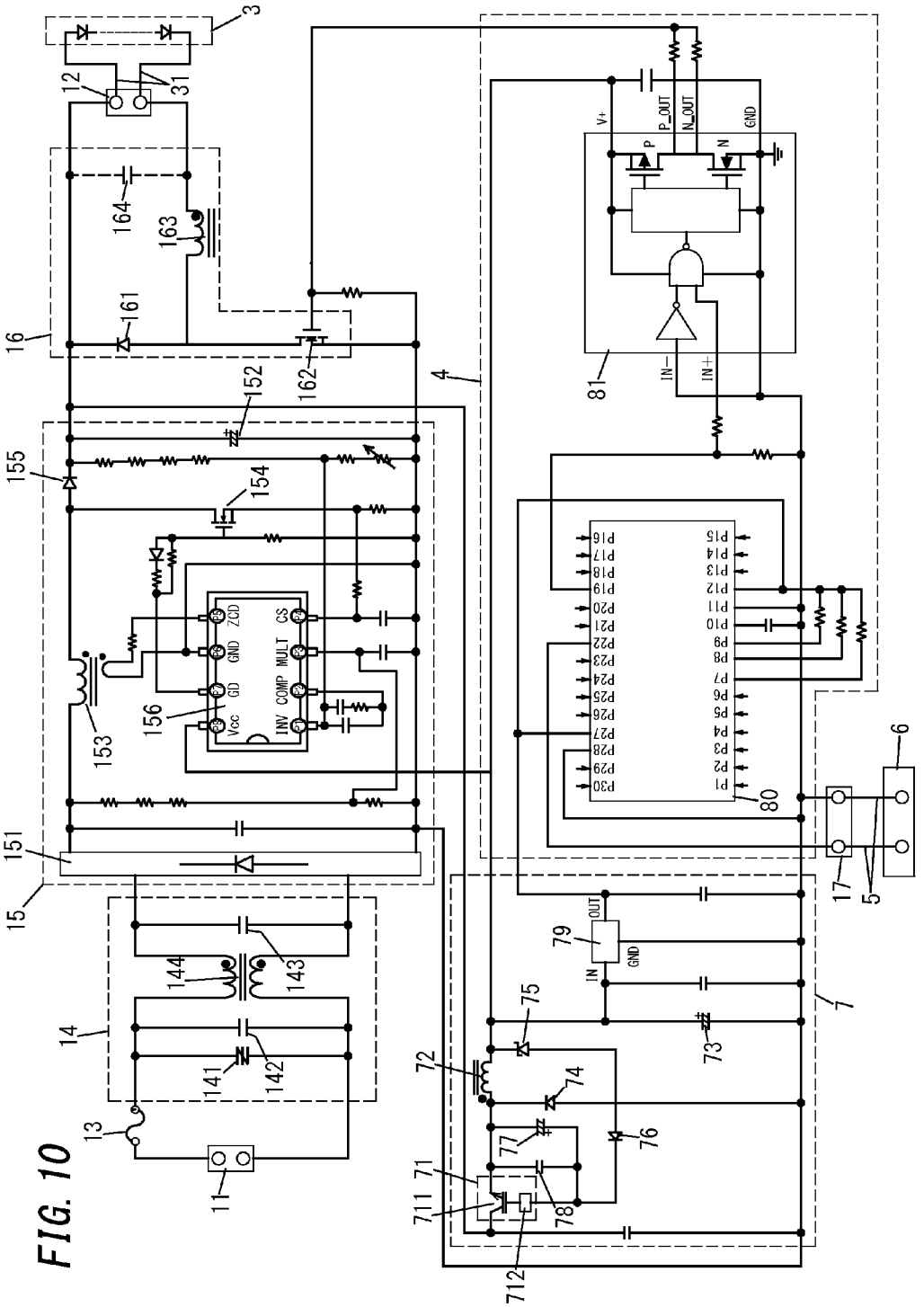
3
12
31
164
163
161
16
152
162
4
155
154
153
156
151
15
144
143
14
141
142
13
11
Vcc
GD
INV
COMP
MULT
GND
ZCD
CS
V+
P_OUT
N_OUT
GND
P
N
IN−
IN+
81
P30
P29
P28
P27
P26
P25
P24
P23
P22
P21
P20
P19
P18
P17
P16
P15
P14
P13
P12
P11
P10
P9
P8
P7
P6
P5
P4
P3
P2
P1
80
6
17
5
OUT
IN
GND
79
7
75
73
72
74
76
77
71
711
78
712

FIG. 10

FIG. 11

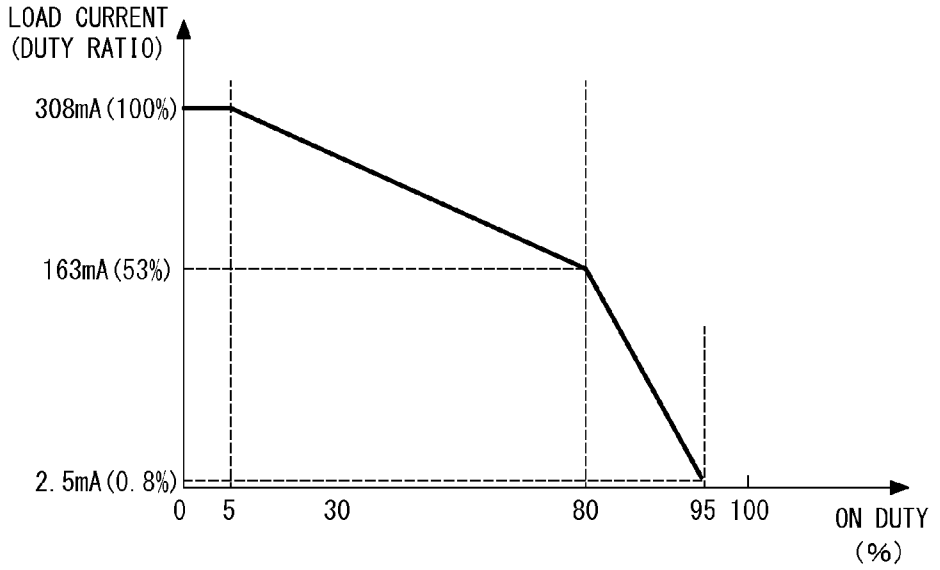
LOAD CURRENT
(DUTY RATIO)
308mA (100%)
163mA (53%)
2.5mA (0.8%)
0
5
30
80
95
100
ON DUTY
(%)

FIG. 12

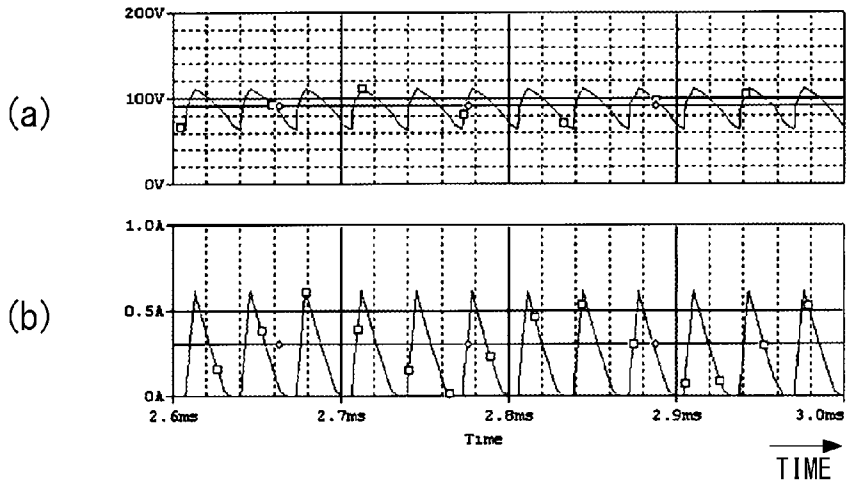
(a)
200V
100V
0V
(b)
1.0A
0.5A
0A
2.6ms
2.7ms
2.8ms
2.9ms
3.0ms
Time
TIME

FIG. 13

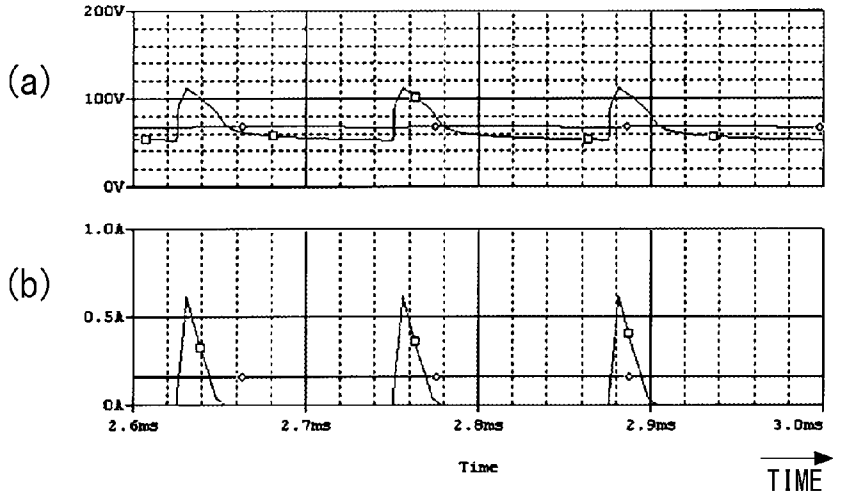
(a)
200V
100V
0V
(b)
1.0A
0.5A
0A
2.6ms
2.7ms
2.8ms
2.9ms
3.0ms
Time
TIME

FIG. 14

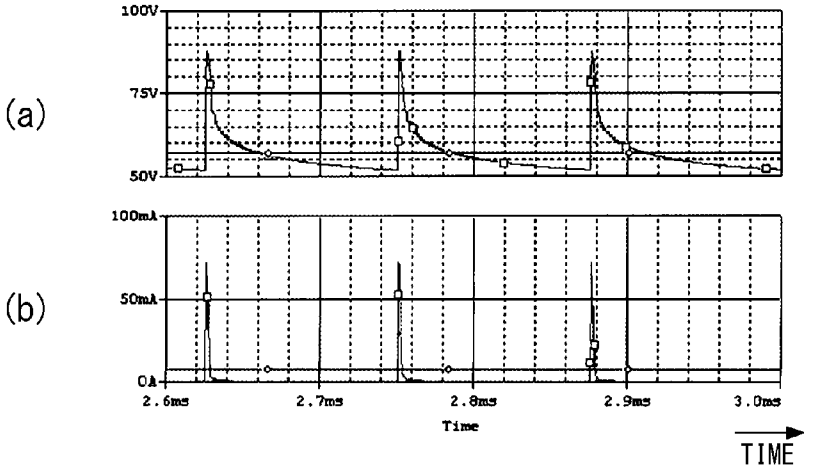
(a)
100V
75V
50V
(b)
100mA
50mA
0A
2.6ms
2.7ms
2.8ms
2.9ms
3.0ms
Time
TIME

FIG. 15

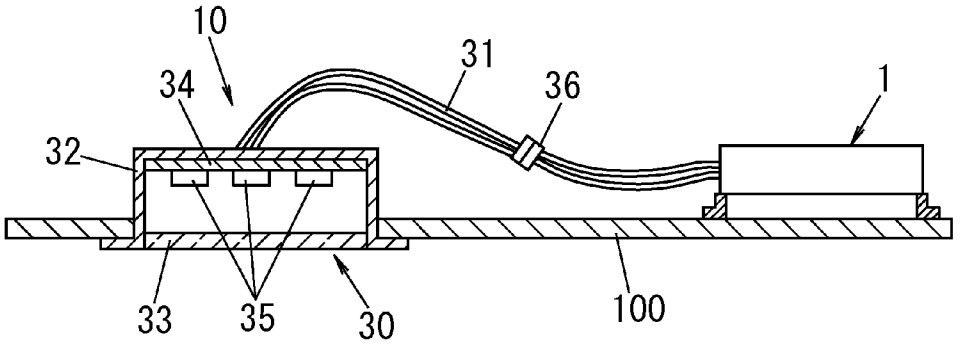
10
34
31
36
1
32
33
35
30
100

FIG. 16

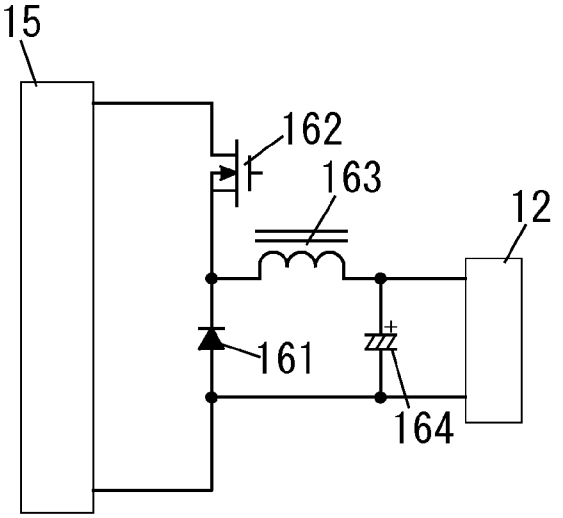

FIG. 17

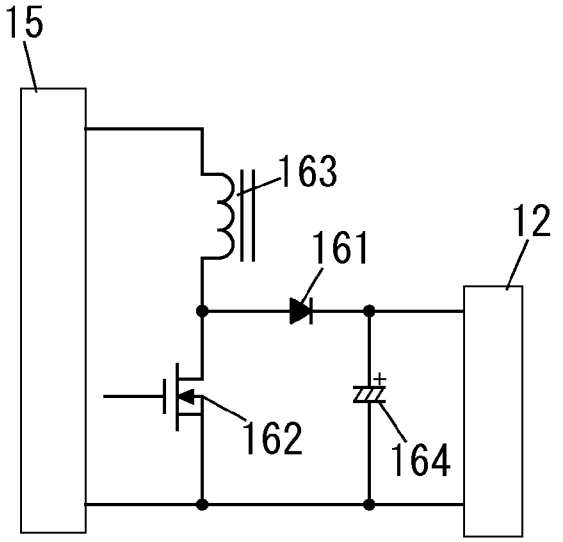

FIG. 18

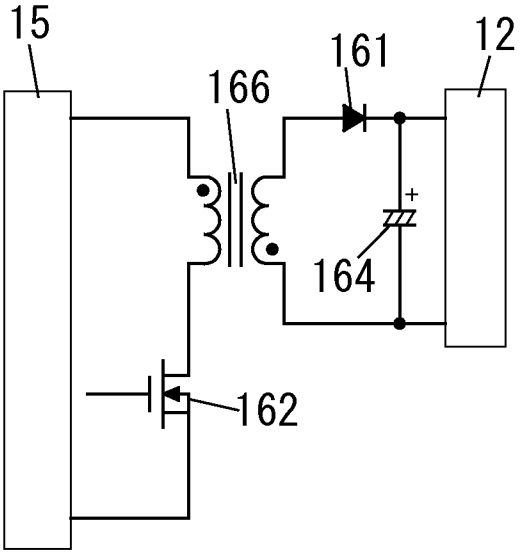

FIG. 19

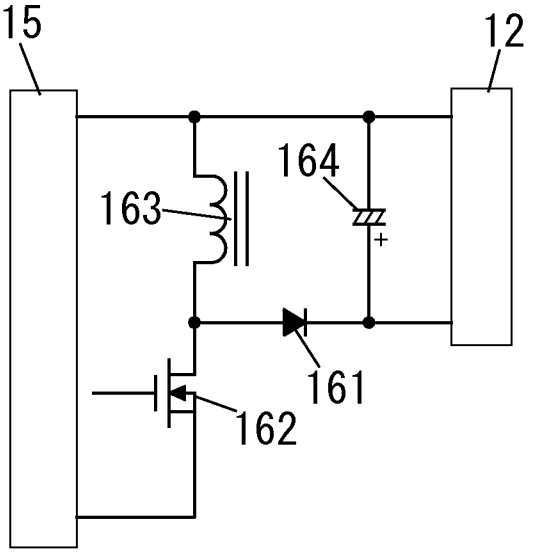

FIG. 20

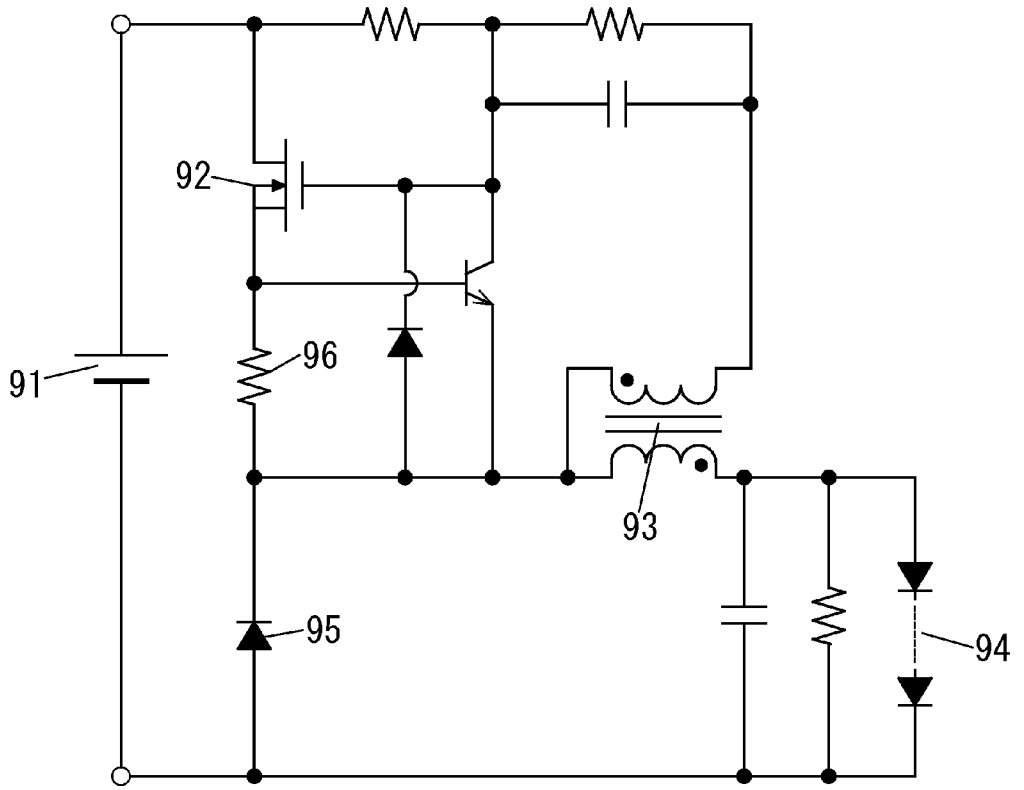

LIGHTING APPARATUS AND ILLUMINATING FIXTURE WITH THE SAME

TECHNICAL FIELD

The present invention relates to lighting apparatuses and illuminating fixtures with the same, and more particularly to a lighting apparatus capable of dimming a semiconductor light emitting element and an illuminating fixture with the same.

BACKGROUND ART

Recently, illuminating fixtures using a semiconductor light emitting element such as a light emitting diode (an LED), an organic electroluminescence (EL) element, and the like, as a light source have been proliferated.

The type of illuminating fixture is provided with, for example, a lighting apparatus (an LED lighting apparatus) having a configuration as shown in FIG. **20** (see Document 1 [JP 2005-294063 A]).

This lighting apparatus includes a (first) switching element **92**, an inductor **93**, and a diode **95**. The (first) switching element **92** and the inductor **93** are connected in series with a DC power supply **91**. The diode **95** constitutes a closed circuit in combination with the inductor **93** and a light source load (light emitting diode) **94** while the switching element **92** is turned off.

This lighting apparatus is a self-excited type, and controls on-off operation of the switching element **92**, thereby supplying electromagnetic energy stored in the inductor **93** while the switching element **92** is turned on, to the light source load **94** through the diode **95** while the switching element **92** is turned off.

In addition, this lighting apparatus includes a resistor **96** for measuring a current flowing through the switching element **92**. The lighting apparatus varies on-duration of the switching element **92** in accordance with the current measured by use of the resistor **96**. Thus, a current flowing through the light source load **94** can be kept constant by means of a self-excited type lighting circuit. However, the lighting apparatus in Document 1 is a self-excited type and does not have a dimming function. It is therefore impossible to dim the light source load.

Meanwhile, Document 2 (JP 2003-522393 A) discloses that supply power to a light source load (an LED lighting module) is turned on and off at a burst frequency of 100 Hz or 120 Hz synchronized with a frequency (50 or 60 Hz) of an AC power supply (a main power supply voltage).

The lighting apparatus (a power supply assembly) can control a length of a pulse in which the supply power to the light source load is in an On state, thereby performing a dimming control. However, a specific circuit configuration for dimming is not disclosed in Document 2.

However, as described in Document 2, in the lighting apparatus configured to perform dimming by controlling a pulse length (an On time), when a dimming ratio is small (dark), the On time in one period of the burst frequency is short, which may cause flicker. For this reason, in the lighting apparatus, a range of selectable dimming ratios is difficult to be set widely.

SUMMARY OF INVENTION

In view of the above insufficiency, the present invention is directed to a lighting apparatus capable of widening a dimming range of a light source load with a relatively simple configuration and an illuminating fixture with the same.

The lighting apparatus of the first aspect in accordance with the present invention includes: a switching regulator configured to supply a direct current to a DC light source; and a control circuit configured to control the switching regulator in order to supply a direct current having a magnitude corresponding to a dimming ratio to the DC light source. The switching regulator includes a switching element. The control circuit is configured to adjust a switching frequency and on-duration of the switching element in accordance with the dimming ratio. The control circuit is configured to, when the dimming ratio falls within a first dimming range, adjust the switching frequency to a frequency associated with the first dimming range and adjust the on-duration to duration associated with the dimming ratio in a range of the on-duration associated with the first dimming range. The control circuit is configured to, when the dimming ratio falls within a second dimming range different from the first dimming range, adjust the on-duration to duration associated with the second dimming range and adjust the switching frequency to a frequency associated with the dimming ratio in a range of the switching frequency associated with the second dimming range.

In the lighting apparatus of the second aspect in accordance with the present invention, in addition to the first aspect, the control circuit is configured to, when the control circuit lights the DC light source at full power, adjust the switching frequency to a predetermined standard frequency and adjust the on-duration to predetermined standard on-duration. A combination of the standard frequency and the standard on-duration is a combination of the switching frequency and the on-duration associated with luminance of the DC light source used as a unit amount of the dimming ratio.

In the lighting apparatus of the third aspect in accordance with the present invention, in addition to the second aspect, the switching regulator includes an inductor connected in series with the switching element. The switching regulator is configured to store energy from a power source in the inductor while the switching element is turned on, and to provide the energy stored in the inductor to the DC light source while the switching element is turned off. The standard frequency and the standard on-duration are selected such that a current flows through the inductor in a critical mode or a discontinuous mode.

In the lighting apparatus of the fourth aspect in accordance with the present invention, in addition to any one of the first to third aspects, the control circuit is configured to output a driving signal in accordance with the dimming ratio to the switching element. The driving signal is a periodic voltage signal, and has an on-period in which the driving signal has a voltage exceeding a threshold for turning on the switching element, and an off-period in which the driving signal has the voltage falling below the threshold. The on-duration is determined by to the on-period of the driving signal. The switching frequency is determined by a frequency of the driving signal.

In the lighting apparatus of the fifth aspect in accordance with the present invention, in addition to the fourth aspect, the control circuit is configured to measure a driving current flowing from the control circuit to the switching element while the driving signal is outputted. The control circuit is configured to, when the driving current rises to a first predetermined value, switch the driving signal from the on-period to the off-period. The control circuit is configured to adjust the on-duration by means of adjusting the first predetermined value.

In the lighting apparatus of the sixth aspect in accordance with the present invention, in addition to the fifth aspect, the

control circuit is configured to adjust the first predetermined value to a value not greater than zero in order to turn off the DC light source.

In the lighting apparatus of the seventh aspect in accordance with the present invention, in addition to the fourth or fifth aspect, the control circuit includes: a capacitor charged with the driving signal; and a discharging speed circuit configured to determine a discharging speed of the capacitor in accordance with a second predetermined value. The control circuit is configured to, when a voltage across the capacitor decreases down to a predetermined threshold, switch the driving signal from the off-period to the on-period. The control circuit is configured to adjust the frequency of the driving signal by means of adjusting the second predetermined value.

In the lighting apparatus of the eighth aspect in accordance with the present invention, in addition to the seventh aspect, the control circuit is configured to adjust the second predetermined value to a value not greater than zero in order to turn off the DC light source.

In the lighting apparatus of the ninth aspect in accordance with the present invention, in addition to any one of the first to eighth aspects, the control circuit is configured to receive a dimming signal indicative of the dimming ratio.

In the lighting apparatus of the tenth aspect in accordance with the present invention, in addition to any one of the first to ninth aspects, a minimum of the switching frequency is 1 kHz.

In the lighting apparatus of the eleventh aspect in accordance with the present invention, in addition to any one of the first to tenth aspects, the first dimming range is defined as a range having a lower limit not less than a predetermined dimming ratio. The second dimming range is defined as a range having an upper limit less than the predetermined dimming ratio. The range of the switching frequency associated with the second dimming range has an upper limit not greater than the frequency associated with the first dimming range. The duration associated with the second dimming range is not greater than the duration associated with the predetermined dimming ratio in the range of the on-duration associated with the first dimming range.

In the lighting apparatus of the twelfth aspect in accordance with the present invention, in addition to any one of the first to tenth aspects, the second dimming range is defined as a range having a lower limit not less than a predetermined dimming ratio. The first dimming range is defined as a range having an upper limit less than the predetermined dimming ratio. The range of the on-duration associated with the first dimming range has an upper limit not greater than the duration associated with the second dimming range. The frequency associated with the first dimming range is not greater than the frequency associated with the predetermined dimming ratio in the range of the switching frequency associated with the second dimming range.

The illuminating fixture of the thirteenth aspect in accordance with the present invention includes: a lighting apparatus defined by any one of the first to twelfth aspects; and a DC light source configured to receive electric power from the lighting apparatus.

BRIEF DESCRIPTION OF DRAWINGS

FIG. **1** is a circuit diagram illustrating the configuration of the lighting apparatus of the first embodiment;

FIG. **2** is an explanation diagram illustrating the operation of the lighting apparatus in the full lighting state according to the first embodiment;

FIG. **3** is an explanation diagram illustrating the operation of the lighting apparatus in the first dimming state according to the first embodiment;

FIG. **4** is an explanation diagram illustrating the operation of the lighting apparatus in the second dimming state according to the first embodiment;

FIG. **5** is an explanation diagram illustrating the operation of the lighting apparatus in the third dimming state according to the first embodiment;

FIG. **6** is a circuit diagram illustrating the configuration of the lighting apparatus of the first embodiment;

FIG. **7** is a circuit diagram illustrating the configuration of the control circuit of the lighting apparatus according to the first embodiment;

FIG. **8** is a circuit diagram illustrating the configuration of the lighting apparatus according to the first embodiment;

FIG. **9** is an explanation diagram illustrating the operation of the lighting apparatus according to the first embodiment;

FIG. **10** is a circuit diagram illustrating the configuration of the lighting apparatus of the second embodiment;

FIG. **11** is an explanation diagram illustrating the operation of the lighting apparatus according to the second embodiment;

FIG. **12** is an explanation diagram illustrating the operation of the lighting apparatus according to the second embodiment;

FIG. **13** is an explanation diagram illustrating the operation of the lighting apparatus according to the second embodiment;

FIG. **14** is an explanation diagram illustrating the operation of the lighting apparatus according to the second embodiment;

FIG. **15** is a sectional view illustrating the illuminating fixture including the above lighting apparatus;

FIG. **16** is a circuit diagram illustrating the primary part of the other configuration of the above lighting apparatus;

FIG. **17** is a circuit diagram illustrating the primary part of the other configuration of the above lighting apparatus;

FIG. **18** is a circuit diagram illustrating the primary part of the other configuration of the above lighting apparatus;

FIG. **19** is a circuit diagram illustrating the primary part of the other configuration of the above lighting apparatus; and

FIG. **20** is a circuit diagram illustrating the configuration of the prior lighting apparatus.

DESCRIPTION OF EMBODIMENTS

First Embodiment

As shown in FIG. **1**, a lighting apparatus **1** according to the present embodiment includes a power supply connector **11** adapted to be connected to an AC power supply **2** (see FIG. **8**) such as a commercial power supply, and an output connector **12** adapted to be connected to a light source load **3** comprising a semiconductor light emitting element such as a light emitting diode (LED) through lead wires **31**.

The light source load **3** is adapted to be lit by a DC output current supplied from the lighting apparatus **1**. The light source load **3** may be an LED module formed of a plurality of (for example, thirty) light emitting diodes connected in series, in parallel, or in series and parallel. Besides, the light source load **3** is a DC light source designed to operate with DC power. It is sufficient that the light source load **3** is configured to emit light having intensity corresponding to an amount of a received direct current.

The lighting apparatus **1** includes: a DC power supply generation unit having a filter circuit **14** and a DC power

supply circuit **15**; a step-down chopper circuit (a buck converter) **16**; and a control circuit **4**, as main components. A basic configuration of the lighting apparatus **1** will be hereinafter described with reference to FIG. **1**.

The power supply connector **11** is connected to the DC power supply circuit **15** through a current fuse **13** and the filter circuit **14**.

The filter circuit **14** includes: a surge voltage absorbing device **141** and a filter capacitor **142** connected in parallel with the power supply connector **11** through the current fuse **13**; a filter capacitor **143**; and a common mode choke coil **144**. The filter circuit **14** is configured to cut noise. The filter capacitor **143** is connected between input terminals of the DC power supply circuit **15**. The common mode choke coil **144** is inserted between the two filter capacitors **142** and **143**.

Herein, the DC power supply circuit **15** is a rectifying and smoothing circuit including a full-wave rectifier **151** and a smoothing capacitor **152**, but it is not limited thereto. For example, the DC power supply circuit **15** may be a power correction circuit (a power factor improving circuit) including a step-up chopper circuit.

By the above configuration, the DC power supply generation unit including the filter circuit **14** and the DC power supply circuit **15** converts an AC voltage (100 V, 50 or 60 Hz) from an AC power supply **2** into a DC voltage (about 140 V) and outputs the converted DC voltage from the output terminals (both terminals of the smoothing capacitor **152**) thereof.

The DC power supply circuit **15** has output terminals (both terminals of the smoothing capacitor **152**) connected to the step-down chopper circuit **16**. The step-down chopper circuit **16** has output terminals connected to the output connector **12**.

The step-down chopper circuit **16** is defined as a switching regulator configured to supply a direct current to the light source load (DC light source) **3**. The step-down chopper circuit **16** includes: a diode (a regenerative diode) **161** and a switching element **162** connected in series to each other and connected between the output terminals of the DC power supply circuit (the DC power supply) **15**; and an inductor **163** connected in series to the light source load **3** between both ends of the diode **161**.

In this configuration, the diode **161** is installed so that a cathode of the diode **161** is connected to an output terminal of a positive side of the DC power supply circuit **15**. That is, the switching element **162** is arranged to be inserted between a series circuit of the inductor **163** and the light source load **3** connected in parallel with the diode **161**, and an output terminal of a negative side of the DC power supply circuit **15**. A function of the diode **161** will be described below.

The step-down chopper circuit **16** also includes an output capacitor **164** (in FIGS. **1** and **6**, illustrated by dashed lines). The output capacitor **164** is connected between output terminals thereof (between both terminals of the output connector **12**) and is connected in parallel with the light source load **3**. The output capacitor **164** serves to smooth a pulsation component (ripple) of the output current supplied to the light source load **3** from the output connector **12**. Besides, the output capacitor **164** is optional.

The control circuit **4** is configured to control the step-down chopper circuit (switching regulator) **16** in order to supply a direct current having a magnitude corresponding to a dimming ratio to the light source load (DC light source) **3**. The control circuit **4** is configured to adjust a switching frequency and on-duration of the switching element **162** in accordance with the dimming ratio. The on-duration is defined as time of one period during which the switching element **162** is consecutively turned on.

The control circuit **4** is adapted to turn on and off the switching element **162** of the step-down chopper circuit **16** at a high frequency. In an example of FIG. **1**, the switching element **162** includes a metal oxide semiconductor field effect transistor (MOSFET). The control circuit **4** is adapted to supply a gate signal (driving signal) between a gate and a source of the switching element **162**, thereby turning the switching element **162** on and off.

The control circuit **4** is configured to output the driving signal in accordance with the dimming ratio to the switching element **162**. The driving signal is a periodic voltage signal, and has an on-period in which the driving signal has a voltage exceeding a threshold for turning on the switching element **162**, and an off-period in which the driving signal has the voltage falling below the threshold. The on-duration is determined by to the on-period of the driving signal. The switching frequency is determined by a frequency of the driving signal.

In the present embodiment, the driving signal is a binary signal which has a voltage exceeding a threshold for turning on the switching element **162** and a voltage falling below the threshold.

More specifically, the control circuit **4** outputs the gate signal (see FIG. **2** (*b*)) having a rectangular wave form in which a high (H) level and a low (L) level are alternately repeated. The switching element **162** is turned on while the gate signal is in a period of the H level. The switching element **162** is turned off while the gate signal is in a period of the L level.

Besides, the driving signal is not limited to a binary signal. In brief, the driving signal may be selected from a sinusoidal wave signal, a rectangular wave signal, a triangular wave signal, and a sawtooth wave signal.

In the example of FIG. **1**, the control circuit **4** has an output terminal for outputting the gate signal, and this output terminal of the control circuit **4** is connected to the output terminal of the negative side of the DC power supply circuit **14** through a series circuit of resistors **41** and **42**. Connected to a gate terminal of the switching element **162** is a connection point of the two resistors **41** and **42**.

However, the control circuit **4** has three modes, that is, a first control mode, a second control mode, and a third control mode as control modes of the switching element **162**.

The control circuit **4** is configured to select the second control mode or the third control mode according to a dimming ratio designated from the outside, thereby dimming the light source load **3** based on the designated dimming ratio. In the present embodiment, a range of the dimming ratio is divided into a plurality of intervals. The second control mode or the third control mode is preliminarily allocated for each of at least two intervals of the divided intervals.

In the first control mode, the control circuit **4** is configured to turn the switching element **162** on and off at a predetermined oscillating frequency (switching frequency) and on-duration (on-duration per one period) so that, as an intermittent mode, a current (an electric current) discontinuously flows through the inductor **163**.

The first control mode is a control mode for lighting the light source load **3** at full power. The control circuit **4** is configured to, when the control circuit **4** lights the light source load **3** at full power, adjust the switching frequency to a predetermined standard frequency and adjust the on-duration to predetermined standard on-duration. A combination of the standard frequency and the standard on-duration is selected based on a combination of the switching frequency and the on-duration associated with luminance of the light source load **3** used as a unit amount of the dimming ratio.

The intermittent mode mentioned herein, which is a mode in which a sleep interval (an interval in which a current becomes zero) is generated in the current flowing through the inductor **163**, includes a critical mode in which the switching element **162** is turned on when the current flowing through the inductor **163** becomes zero. That is, the intermittent mode includes a critical mode and a discontinuous mode. The critical mode is a mode in which the current flowing through the inductor **163** becomes zero only for a moment. The discontinuous mode is a mode in which the state in which a current becomes zero every period of the current flowing through the inductor **163** is continued for a predetermined period.

In brief, a combination of the standard frequency and the standard on-duration is selected such that a current flows through the inductor **163** in the critical mode or the discontinuous mode.

In the second control mode, the control circuit **4** is configured to approximately fix the oscillating frequency of the switching element **162** within each of the aforementioned intervals and to change the on-duration of the switching element **162**.

In other words, the control circuit **4** is configured to, when the dimming ratio falls within a dimming range (first dimming range) associated with the second control mode, adjust the switching frequency (oscillating frequency) to a frequency associated with the first dimming range and adjust the on-duration to duration associated with the dimming ratio in a range of the on-duration associated with the first dimming range.

Unlike the second control mode, in the third control mode, the control circuit **4** is configured to approximately fix the on-duration of the switching element **162** within each of the intervals and to change the oscillating frequency of the switching element **162**.

In other words, the control circuit **4** is configured to, when the dimming ratio falls within a dimming range (second dimming range) associated with the third control mode, adjust the on-duration to duration associated with the second dimming range and adjust the switching frequency (oscillating frequency) to a frequency associated with the dimming ratio in a range of the switching frequency associated with the second dimming range.

The control circuit **4** is configured to select the first control mode to fully light the light source load **3**, if a full lighting mode for fully lighting the light source load **3** is designated. Meanwhile, if a dimming mode for dimming the light source load **3** at a dimming ratio is designated, the control circuit **4** is configured to select one of the second and third control modes according to an interval (dimming range) corresponding to the designated dimming ratio, thereby dimming the light source load **3** according to the designated dimming ratio.

Here, in the second control mode, the oscillating frequency is approximately fixed within the interval. Therefore, a preset value of the oscillating frequency is preliminarily associated with the interval (first dimming range) for which the second control mode is allocated.

In the third control mode, the on-duration is approximately fixed within the interval. Therefore, a preset value of the on-duration is preliminarily associated with the interval (second dimming range) for which the third control mode is allocated.

For example, when a dimming ratio included in the interval corresponding to the second control mode is designated, the control circuit **4** selects the second control mode and approximately fixes the oscillating frequency to the preset value (the oscillating frequency) that is allocated to the interval and changes the on-duration to dim the light source load **3**.

In contrast, when a dimming ratio included in the interval corresponding to the third control mode is designated, the control circuit **4** selects the third control mode and approximately fixes the on-duration to the preset value (the on-duration) that is allocated to the interval and changes the oscillating frequency to dim the light source load **3**.

Next, an operation of the foregoing lighting apparatus **1** is described as being divided into a full lighting state in which the light source load **3** is fully lit and each of first to third dimming states in which the light source load **3** is dimmed.

For example, the range of the dimming ratio includes a first interval (first dimming interval), a second interval (second dimming interval), and a third interval (third dimming interval).

The first interval is defined as an interval in which the dimming ratio is not less than 70% but is less than 95%. The first interval serves as the first dimming range associated with the second control mode. In the first interval, the switching frequency is fixed to a frequency f**2**, and the on-duration is selected from a range of t**2** to t**2'** (t**2**<t**2'**) in accordance with the dimming ratio. Besides, t**2** represents duration corresponding to a minimum value of the dimming ratio included in the first interval, and t**2'** represents duration corresponding to a maximum value of the dimming ratio included in the first interval. As mentioned in the above, the frequency f**2** and the range of the on-duration of t**2** to t**2'** are allocated to the first interval.

The second interval is defined as an interval in which the dimming ratio is not less than 20% but is less than 70%. The second interval serves as the second dimming range associated with the third control mode. In the second interval, the on-duration is fixed to duration t**3**, and the switching frequency is selected from a range of f**3** to f**3'** (f**3**<f**3'**) in accordance with the dimming ratio. Besides, f**3** represents a frequency corresponding to a minimum value of the dimming ratio included in the second interval, and f**3'** represents a frequency corresponding to a maximum value of the dimming ratio included in the second interval. As mentioned in the above, the on-duration t**3** and the range of the switching frequency of f**3** to f**3'** are allocated to the second interval.

Herein, the first interval (the first dimming range) is defined as a range having a lower limit not less than a predetermined dimming ratio (70%). The second interval (the second dimming range) is defined as a range having an upper limit less than the predetermined dimming ratio (70%). The range of the switching frequency associated with the second interval (the second dimming range) has the upper limit f**3'** not greater than the frequency f**2** associated with the first interval (the first dimming range). The duration t**3** associated with the second interval (the second dimming range) is not greater than the duration t**2** associated with the predetermined dimming ratio (70%) in the range of the on-duration associated with the first interval (the first dimming range).

The third interval is defined as an interval in which the dimming ratio is not less than 10% but is less than 20%. The third interval serves as the first dimming range associated with the second control mode. In the third interval, the switching frequency is fixed to a frequency f**4**, and the on-duration is selected from a range of t**4** to t**4'** (t**4**<t**4'**) in accordance with the dimming ratio. Besides, t**4** represents duration corresponding to a minimum value of the dimming ratio included in the third interval, and t**4'** represents duration corresponding to a maximum value of the dimming ratio included in the third interval. As mentioned in the above, the frequency f**4** and the range of the on-duration of t**4** to t**4'** are allocated to the third interval.

Herein, the second interval (the second dimming range) is defined as a range having a lower limit not less than a predetermined dimming ratio (20%). The third interval (the first dimming range) is defined as a range having an upper limit less than the predetermined dimming ratio (20%). The range of the on-duration associated with the third interval (the first dimming range) has the upper limit t**4'** not greater than the duration t**3** associated with the second interval (the second dimming range). The frequency f**4** associated with the third interval (the first dimming range) is not greater than the frequency f**3** associated with the predetermined dimming ratio (20%) in the range of the switching frequency associated with the second interval (the second dimming range).

Defined as an interval in which the dimming ratio is not less than 95% but less than 100% is a full lighting interval. Therefore, in the full lighting interval, the control circuit **4** controls the switching element **162** at the standard frequency f**1** and the standard on-duration t**1**.

Defined as an interval in which the dimming ratio is not less than 0% but less than 10% is a minimum dimming interval or an extinction interval. In the minimum dimming interval, the control circuit **4** controls the switching element **162** at the frequency f**4** and the on-duration t**4** corresponding to the minimum value (10%) of the dimming ratio included in the third interval. In the extinction interval, the control circuit **4** keeps turning off the switching element **162** so as not to supply a direct current from the switching regulator **16** to the DC light source **3**.

The first dimming state mentioned herein is a lighting state according to the second control mode. Especially, the first dimming state is a lighting state observed when the dimming ratio is decreased from the 95% down to 70%. In other words, the first dimming state is a lighting state in which the dimming ratio is 70%.

The second dimming state is a lighting state in which the third control mode is additionally selected from the first dimming state. Especially, the second dimming state is a lighting state observed when the dimming ratio is decreased from the 70% down to 20%. In other words, the second dimming state is a lighting state in which the dimming ratio is 20%.

Further, the third dimming state is a lighting state in which the second control mode is additionally selected from the second dimming state. Especially, the third dimming state is a lighting state observed when the dimming ratio is decreased from the 20% down to 10%. In other words, the third dimming state is a lighting state in which the dimming ratio is 10%.

That is, when the second control mode is selected at the full lighting state, the lighting state of the lighting apparatus **1** is changed to the first dimming state. When the third control mode is selected at the first dimming state, the lighting state of the lighting apparatus **1** is changed to the second dimming state. When the second control mode is selected at the second dimming state, the lighting state of the lighting apparatus **1** is changed to the third dimming state.

In other words, the first dimming state is a state in which only the second control mode is selected at the full lighting state. The second dimming state is corresponding to a state observed when the multiple control modes are selected in a stepwise manner, that is, the second control mode and the third control mode are selected in this order at the full lighting state. The third dimming state is corresponding to a state observed when the multiple control modes are selected in a stepwise manner, that is, the second control mode, the third control mode, and the second control mode are selected in this order at the full lighting state.

In the above example, the second control mode is allocated to the first interval and the third interval, and the third control mode is allocated to the second interval. Alternatively, the third control mode may be allocated to the first interval and the third interval, and the second control mode may be allocated to the second interval. In other words, in a process of decreasing the dimming ratio from 100%, the third control mode may be performed prior to the second control mode after the first control mode is performed.

FIG. **2** shows an operation of the lighting apparatus **1** in the full lighting state. In FIG. **2**, a horizontal axis of each of (a) and (b) represents time, and (a) shows a current I**1** flowing through the inductor **163**, and (b) shows the gate signal (driving signal) applied to the gate terminal of the switching element **162** from the control circuit **4** (FIGS. **3** to **5** are made in the same manner as FIG. **2**).

Further, in FIG. **2**, an on-interval (that is, a period [on-period] in which the gate signal has the H level) in which the switching element **162** is kept turned on is represented by "Ton", and an off-interval (that is, a period [off-period] in which the gate signal has the L level) in which the switching element **162** is kept turned off is represented by "Toff" (FIGS. **3** to **5** are made in the same manner as FIG. **2**).

With regard to the full lighting state, in the on-interval of the switching element **162**, a current flows from the DC power supply circuit **15** through a closed circuit of the DC power supply circuit **15**, the light source load **3**, the inductor **163**, the switching element **162**, and the DC power supply circuit **15**, and thus electromagnetic energy is stored in the inductor **163**.

Meanwhile, in the off-interval of the switching element **162**, the electromagnetic energy stored in the inductor **163** is discharged, and thus a current flows through a closed circuit of the inductor **163**, the diode **161**, the light source load **3**, and the inductor **163**.

Here, in the full lighting state, the control circuit **4** turns the switching element **162** on and off at the predetermined oscillating frequency and on-duration (on-duration per one period) according to the first control mode.

As shown in FIG. **2** (*a*), in the full lighting state, the lighting apparatus **1** is operated in a so-called critical mode or discontinuous mode in which the switching element **162** is turned on after the current I**1** flowing through the inductor **163** becomes zero. In this case, the oscillating frequency of the switching element **162** is f**1** and the on-duration thereof is t**1**. In brief, in the present embodiment, the standard frequency is f**1**, and the standard on-duration is t**1**.

FIG. **3** illustrates the operation of the lighting apparatus **1** in the first dimming mode.

In the first dimming state, the control circuit **4** mainly controls the on-duration of the switching element **162** so that the oscillating frequency f**2** is approximately equal to the oscillating frequency f**1** of the full lighting state. That is, the control circuit **4** changes only the on-duration of the switching element **162** so as to shorten the same while making the oscillating frequency of the switching element **162** identical to that in the full lighting state.

Here, as shown in FIG. **3** (*a*), even in the first dimming state, the lighting apparatus **1** is operated in a so-called discontinuous mode in which the switching element **162** is turned on after the current I**1** flowing through the inductor **163** becomes zero.

As such, when the lighting apparatus **1** is in the first dimming state, since the on-duration of the switching element **162** is shorter than that of the full lighting state, a peak of the current I**1** flowing through the inductor **163** is reduced and the electromagnetic energy stored in the inductor **163** is also reduced, as compared to the full lighting state. As a result, when compared with the full lighting state, the current (the output current) supplied from the lighting apparatus **1** to the

light source load **3** is reduced and the light output from the light source load **3** is reduced (the light source load **3** becomes dark).

In this case, the on-duration t**2** of the switching element **162** is shorter than the on-duration t**1** in the full lighting state (t**1**>t**2**) and the oscillating frequency f**2** is approximately the same as the oscillating frequency f**1** in the full lighting state (f**1**≈f**2**).

FIG. **4** shows an operation of the lighting apparatus **1** in the second dimming state.

In the second dimming state, the control circuit **4** mainly controls the oscillating frequency of the switching element **162** and makes the on-duration t**3** approximately identical to the on-duration t**2** of the first dimming state. That is, the control circuit **4** changes only the oscillating frequency of the switching element **162** so as to reduce the same while making the on-duration of the switching element **162** identical to that in the first dimming state.

Here, as shown in FIG. **4** (*a*), even in the second dimming state, the lighting apparatus **1** is operated in the discontinuous mode in which the current I**1** intermittently flows through the inductor **163**.

As such, when the lighting apparatus **1** is in the second dimming state, the oscillating frequency of the switching element **162** is reduced and the off-duration (the off-duration per one period) of the switching element **162** is increased. Therefore, when the lighting apparatus **1** is in the second dimming state, the peak of the current I**1** flowing through the inductor **163** is reduced more and the electromagnetic energy stored in the inductor **163** is also reduced more, as compared to the first dimming state. As a result, when compared with the first dimming state, the current (the output current) supplied from the lighting apparatus **1** to the light source load **3** is reduced more and the light output from the light source load **3** is reduced more (the light source load **3** becomes darker).

In this case, the on-duration t**3** of the switching element **162** is approximately the same as the on-duration t**2** in the first dimming state (t**2**≈t**3**) and the oscillating frequency f**3** is lower than the oscillating frequency f**2** in the first dimming state (f**2**>f**3**).

FIG. **5** shows an operation of the lighting apparatus **1** in the third dimming state.

In the third dimming state, the control circuit **4** mainly controls the on-duration of the switching element **162** and makes the oscillating frequency f**4** approximately equivalent to the oscillating frequency f**3** in the second dimming state. That is, the control circuit **4** changes only the on-duration of the switching element **162** so as to shorten the same while making the oscillating frequency of the switching element **162** identical to that in the second dimming state.

As such, when the lighting apparatus **1** is in the third dimming state, since the on-duration of the switching element **162** is shorter than that in the second dimming state, the peak of the current I**1** flowing through the inductor **163** is reduced more and the electromagnetic energy stored in the inductor **163** is also reduced more, as compared to the second dimming state. As a result, when compared with the second dimming state, the current (the output current) supplied from the lighting apparatus **1** to the light source load **3** is reduced more and the light output from the light source load **3** is reduced more (the light source load **3** becomes darker).

In this case, the on-duration t**4** of the switching element **162** is shorter than the on-duration t**3** in the second dimming state (t**3**>t**4**) and the oscillating frequency f**4** is approximately the same as the oscillating frequency f**3** in the second dimming state (f**3**≈f**4**).

Consequently, the light source load **3** is brightest in the full lighting state and is darkest in the third dimming state.

The present embodiment illustrates the instance in which the control circuit **4** continuously changes the on-duration of the switching element **162** in the second control mode and continuously changes the oscillating frequency of the switching element **162** in the third control mode. However, the present embodiment is not limited to this instance. For example, the control circuit **4** may change the on-duration of the switching element **162** stepwise (discontinuously) in the second control mode and may change the oscillating frequency of the switching element **162** stepwise (discontinuously) in the third control mode.

Next, a detailed configuration of the control circuit **4** will be described in more detail.

In the present embodiment, the control circuit **4** includes a driver circuit **4***a* for controlling the switching element **162**. As shown in FIG. **6**, the driver circuit **4***a* is constituted by an integrated circuit (IC) **40** for control and peripheral components thereof.

As the integrated circuit **40**, "L6562" from ST Micro Electronic Co. is used herein. The integrated circuit (L6562) **40** is an original IC for controlling a PFC circuit (step-up chopper circuit for power factor improving control) and includes components unnecessary to control the step-down chopper circuit **16** therein, such as a multiplying circuit. On the other hand, the integrated circuit **40** includes a function of controlling a peak value of an input current and a function of controlling zero cross within one chip in order to control so that the average value of the input current becomes a similar figure to an envelope of an input voltage, and uses these functions for controlling the step-down chopper circuit **16**.

The lighting apparatus **1** includes a control power supply circuit **7**. The control power supply circuit **7** includes a zener diode **701** and a smoothing capacitor **702**. The control supply circuit **7** is configured to supply control power to the integrated circuit **40**. The lighting apparatus **1** applies an output voltage of the control power supply circuit **7** to a power supply terminal (an eighth pin P**8**) of the integrated circuit **40**.

FIG. **7** schematically shows an internal configuration of the integrated circuit **40** used in the present embodiment. The integrated circuit **40** has first to eighth pins P**1** to P**8**. The first Pin (INV) P**1** is an inverting input terminal of a built-in error amplifier **401** of the integrated circuit **40**. The second pin (COMP) P**2** is an output terminal of the error amplifier **401**. The third pin (MULT) P**3** is an input terminal of a multiplying circuit **402**. The fourth Pin (CS) P**4** is a chopper current detection terminal. The fifth pin (ZCD) P**5** is a zero cross detection terminal. The sixth pin (GND) P**6** is a ground terminal. The seventh pin (GD) P**7** is a gate drive terminal. The eighth pin (Vcc) P**8** is the power supply terminal.

When control power supply voltage which is not less than a predetermined voltage is applied between the eighth and sixth pins P**8** and P**6**, reference voltages Vref**1** and Vref**2** are generated with a control power supply **403**, and thus each circuit in the integrated circuit **40** can be operated. When the integrated circuit **40** is energized, a starter **404** provides a start pulse to a set input terminal (designated by the reference character "S" in FIG. **7**) of a flip flop **405**, and an output terminal (designated by the reference character "Q" in FIG. **7**) of the flip flop **405** has the H level accordingly, and thus a driving circuit **406** sets the seventh pin P**7** to the H level.

When the seventh pin P**7** is set to the H level, a drive voltage (the gate signal) obtained through voltage dividing by the resistors **41** and **42** shown in FIG. **6** is applied between the gate and the source of the switching element **162**. Inserted between a source terminal of the switching element **162** and

the negative electrode of the DC power supply circuit **15** is a resistor **43**. The resistor **43** is used for measuring a current flowing through the switching element **162** and has a relatively low resistance. Therefore, the resistor **43** hardly affects the driving voltage between the gate and the source.

When the switching element **162** is supplied with the drive voltage and then turned on, a current flows from a positive electrode of the smoothing capacitor **152** to a negative electrode of the smoothing capacitor **152** through the light source load **3**, the inductor **163**, the switching element **162**, and the resistor **43**. In this situation, a chopper current flowing through the inductor **163** is an approximately linearly increasing current unless the inductor **163** is magnetic-saturated. Such a chopper current is measured by means of the resistor **43** serving as a current sensing unit. Connected between the opposite ends of the resistor **43** for current sensing is a series circuit of a resistor **44** and a capacitor **62**. Connected to the fourth pin P**4** of the integrated circuit **40** is a connection point of the resistor **44** and the capacitor **62**. Therefore, the integrated circuit **40** receives at the fourth pin P**4** a voltage corresponding to a value of the current measured by means of the resistor **43**.

The voltage supplied to the fourth pin P**4** of the integrated circuit **40** is applied to a "+" input terminal of a comparator **409** through a noise filter including a resistor **407** and a capacitor **408** therein. The comparator **409** has a "−" input terminal receiving a reference voltage determined by a voltage applied to the first pin P**1** and a voltage applied to the third pin P**3**, and provides its output to a reset terminal (designated by the reference character "R" in FIG. **7**) of the flip flop **405**. In the aforementioned noise filter, the resistor **407** is, for example, 40 kΩ and the capacitor **408** is, for example, 5 pF.

Therefore, when the voltage at the fourth pin P**4** of the integrated circuit **40** exceeds the reference voltage, the output of the comparator **409** becomes the H level and the reset signal is supplied to the reset terminal of the flip flop **405**, and thus the output of the flip flop **405** becomes the L level. In this situation, the seventh pin P**7** of the integrated circuit **40** becomes the L level, and therefore the diode **45** shown in FIG. **6** is turned on. Thus, electric charges between the gate and the source of the switching element **162** are extracted through a resistor **46**, and thereby the switching element **162** is quickly turned off. When the switching element **162** is turned off, the electromagnetic energy stored in the inductor **163** is discharged to the light source load **3** through the diode **161**.

In the present embodiment, resistors **47**, **48**, and **49** and capacitors **50** and **51** average a rectangular wave signal S**1** from a signal generation circuit **21** (see FIG. **8**) to be described below and a voltage having a size according to a duty ratio of the rectangular wave signal S**1** is applied to the third pin P**3**. Therefore, the reference voltage across the comparator **409** is changed according to the duty ratio of the rectangular wave signal S**1**. Here, the reference voltage is increased with an increase in the duty ratio of the rectangular wave signal S**1** (an increase in the time of the H level). Therefore, the on-duration of the switching element **162** is also increased. Meanwhile, since the reference voltage is decreased with a decrease in the duty ratio of the rectangular wave signal S**1** (a decrease in the time of the H level), the on-duration of the switching element **162** is also decreased.

In other words, the control circuit **4** turns the switching element **162** off when a value of the current (driving current) measured through the resistor (the current sensing unit) **43** reaches a first predetermined value (corresponding to the reference voltage) determined by the rectangular wave signal S**1**. The on-duration of the switching element **162** is changed in accordance with a change in the first value. Therefore, in the first dimming state and the third dimming state of the present embodiment, to change the on-duration of the switching element **162**, this principle is used.

In the present embodiment, the control circuit **4** is configured to measure the driving current flowing from the control circuit **4** to the switching element **162** while the driving signal is outputted. The control circuit **4** is configured to, when the driving current rises to the first predetermined value (reference voltage), switch the driving signal from the on-period to the off-period. The control circuit **4** is configured to adjust the on-duration by means of adjusting the first predetermined value.

As shown in FIG. **6**, the off-duration of the switching element **162** is determined by a diode **52**, a parallel circuit of a resistor **53** and a capacitor **54**, a capacitor **55**, a transistor **56**, and a resistor **57**. The diode **52** and the parallel circuit of the resistor **53** and the capacitor **54** constitute a series circuit connected between the seventh pin P**7** and the fifth pin P**5** of the integrated circuit **40**. The capacitor **55** is connected between the fifth pin P**5** and ground. The transistor **56** and the resistor **57** are connected in series with each other to form a series circuit connected in parallel with the capacitor **55**. Here, resistors **58**, **59**, and **60** and a capacitor **61** average a rectangular wave signal S**2** from the signal generation circuit **21** (see FIG. **8**) to be described below. Applied between a base and an emitter of the transistor **56** is a voltage having a size according to the duty ratio of the rectangular wave signal S**2**.

The integrated circuit **40** includes a built-in clamp circuit **410** connected to the fifth pin P**5** as shown in FIG. **7**. The clamp circuit **410** clamps a voltage at the fifth pin P**5** to a maximum level of, e.g., 5.7 V. Since the fifth pin P**5** is connected to a "−" input terminal of a comparator **411**, the comparator **411** provides an output of the H level when an input voltage to the fifth pin P**5** is not less than a reference voltage Vref**2** (herein, 0.7 V). Therefore, when the seventh pin P**7** becomes the H level (generally about 10 to 15 V), the voltage of the fifth pin P**5** is clamped to 5.7 V. However, when the seventh pin P**7** becomes the L level, the diode **52** is turned off and the capacitor **55** is discharged down to 0.7 V through the transistor **56** and the resistor **57**.

At this time, the output of the comparator **411** becomes the H level. Therefore, the flip flop **405** connected to the output terminal of the comparator **411** through an OR circuit **412** is set and the output of the flip flop **405** also becomes the H level. Therefore, the seventh pin P**7** has the voltage of the H level again, and thus the switching element **162** is turned on. Thereafter, the control circuit **4** repeatedly performs the same operations, and thus the switching element **162** is turned on and off at a high frequency.

Here, as the duty ratio of the rectangular wave signal S**2** is larger (as the time of the H level is longer), the voltage between a base and an emitter of the transistor **56** is more increased and a current flowing through the transistor **56** is also more increased. Therefore, the capacitor **55** is quickly discharged. As a result, the off-duration of the switching element **162** is decreased and the oscillating frequency of the switching element **162** is increased.

On the other hand, as the duty ratio of the rectangular wave signal S**2** is smaller (as the time of the H level is shorter), the voltage between the base and the emitter of the transistor **56** is more reduced and the current flowing through the transistor **56** is also more reduced. Accordingly, the discharge of the capacitor **55** is delayed. As a result, the off-duration of the switching element **162** is increased and the oscillating frequency of the switching element **162** is decreased.

In other words, the control circuit **4** turns the switching element **162** on when a value of the voltage across the capaci-

tor **55** charged by the driving signal of the switching element **162** is not greater than a predetermined threshold value (a value of the reference voltage Vref**2**). Here, the control circuit **4** determines a discharging speed of a capacitor **55** based on a second predetermined value (the voltage between the base and the emitter of the transistor **56**) determined by the rectangular wave signal S**2**. A change in the second predetermined value causes a change in the oscillating frequency of the switching element **162**. Therefore, in the second dimming state of the present embodiment, to change the oscillating frequency of the switching element **162**, this principle is utilized.

In the present embodiment, the control circuit **4** includes: the capacitor **55** charged with the driving signal; and a discharging speed circuit (the transistor **56**) configured to determine the discharging speed of the capacitor **55** in accordance with the second predetermined value (the voltage between the base and the emitter of the transistor **56**). The control circuit **4** is configured to, when the voltage across the capacitor **55** decreases down to the predetermined threshold (the reference voltage Vref**2**), switch the driving signal from the off-period to the on-period. The control circuit **4** is configured to adjust the frequency of the driving signal by means of adjusting the second predetermined value.

Next, the overall configuration of the lighting apparatus **1** in which the lighting apparatus **1** shown in FIG. **1** or **6** is added with a component receiving the dimming signal for determining the dimming ratio to generate the rectangular wave signals S**1** and S**2** will be described with reference to FIG. **8**. In FIG. **8**, the aforementioned filter circuit **14** and the DC power supply circuit **15** are combined and shown as a DC power supply generation unit **140**. The DC power supply generation unit **140** includes capacitors **145** and **146** connecting a circuit ground (the negative electrode of the capacitor **152**) to a frame ground in high frequency.

In FIG. **8**, the lighting apparatus **1** includes a signal line connector **17** used for connecting a set of dimming signal lines **5** to the lighting apparatus **1**, a rectifying circuit **18**, an insulating circuit **19**, and a waveform shaping circuit **20**, and the signal generating circuit **21**, in addition to the components shown in FIG. **1** or **6**.

The set of the dimming signal lines **5** is supplied with the dimming signal including a rectangular wave voltage signal, wherein the duty ratio of the rectangular wave voltage signal is variable, and the frequency and amplitude of the rectangular wave voltage signal are, for example, 1 kHz and 10 V, respectively.

The rectifying circuit **18** is connected to the signal line connector **17**. The rectifying circuit **18** is a circuit for enabling the connection of the dimming signal lines **5** to the lighting apparatus **1** irrespective of polarity of the set of the dimming signal lines **5**. The lighting apparatus **1** includes the rectifying circuit **18**, and thus is normally operated even when the set of the dimming signal lines **5** is connected thereto in reversed polarity. Specifically, the rectifying circuit **18** includes: a full-wave rectifier **181** connected to the signal line connector **17**; an impedance element **182**, and a zener diode **183**. The impedance element is, for example, a resistor. The impedance element **182** and the zener diode **183** are connected in series with an output of the full-wave rectifier **181**. Therefore, the rectifying circuit **18** full-wave rectifies the input dimming signal with the full-wave rectifier **181** and generates the rectangular wave voltage signal across the zener diode **183** through the impedance element **182**.

The insulating circuit **19** includes a photocoupler **191**. The insulating circuit **19** is configured to transfer the rectangular wave voltage signal to the control circuit **4** while electrically insulating the dimming signal lines **5** from the control circuit **4** of the lighting apparatus **1**.

The waveform shaping circuit **20** is configured to correct a waveform of a signal output from the photocoupler **191** of the insulating circuit **19** and output the resultant signal as a pulse width modulation (PWM) signal. Therefore, even when the waveform of the rectangular wave voltage signal (the dimming signal) transmitted far through the dimming signal lines **5** is distorted, the waveform shaping circuit **20** can remove the influence of the distortion.

Here, in a conventional inverter-type fluorescent lamp dimming ballast, a low pass filter circuit such as a CR integrating circuit (a smoothing circuit) is mounted at a latter stage of the waveform shaping circuit. The ballast is adapted to generate an analog dimming voltage and variably control a frequency of the inverter, and the like, according to the dimming voltage. In contrast, the lighting apparatus **1** according to the present embodiment is adapted to supply to the signal generation circuit **21** the PWM signal which is the signal subjected to the waveform shaping.

The signal generation circuit **21** constitutes the control circuit **4** in combination with the driver circuit **4***a*. The signal generation circuit **21** includes a microcomputer and peripheral components thereof, which are not shown.

The microcomputer is configured to measure an on-period of the input PWM signal through a built-in timer and supply two kinds of rectangular wave signals S**1** and S**2** to the driver circuit **4***a*. The rectangular wave signals S**1** and S**2** supplied from the microcomputer are smoothed through the resistor and the capacitor within the driver circuit **4***a*, as described above. Therefore, as the duty ratio of the rectangular wave signal S**1** is larger (as the time of the H level is longer), the input value in the driver circuit **4***a* is more increased. That is, as the duty ratio of the rectangular wave signal S**1** is larger, the voltage V**1** of the third pin P**3** supplied with the smoothed rectangular wave signal S**1** is more increased. As the duty ratio of the rectangular wave signal S**2** is larger, the voltage V**2** between the base and the emitter of the transistor **56**, supplied with the smoothed rectangular wave signal S**2** is more increased.

Next, an explanation referring to FIG. **9** is made to an operation of the lighting apparatus in response to a change in the PWM signal.

With regard to FIG. **9**, horizontal axes represent the duty ratio (On duty) of the PWM signal, and (a) shows the voltage V**1** applied to the third pin P**3** of the integrated circuit **40** of the control circuit **4**, and (b) shows the voltage V**2** between the base and the emitter of the transistor **56**. The duty ratio of the PWM signal corresponds to the duty ratio of the dimming signal since, for the PWM signal, the dimming signal is subjected to only the rectifying or the waveform shaping.

As shown in FIG. **9**, in the interval (full lighting interval) in which the duty ratio of the PWM signal is in a range of 0 to 5%, the voltage V**1** of the third pin P**3** and the voltage V**2** between the base and the emitter of the transistor **56** are set as initial values (V**1**=v**10**, V**2**=v**20**), respectively. In brief, the first control mode is associated with the interval in which the duty ration of the PWM signal is in the range of 0 to 5%. Therefore, in this interval (full lighting interval), the lighting apparatus **1** is in the full lighting state. Consequently, the oscillating frequency and the on-duration of the switching element **162** of the step-down chopper circuit **16** are adjusted to f**1** and t**1**, respectively.

The second control mode is allocated for the interval (first interval) in which the duty ratio of the PWM signal is in a range of 5 to 30%. In this interval (first interval), the signal

generation circuit **21** reduces the duty ratio of the rectangular wave signal S**1** according to an increase in the duty ratio of the PWM signal to reduce the voltage V**1** of the third pin P**3** down to v**11** (<v**10**). Since the on-duration of the switching element **162** is decreased with a decrease in the voltage V**1**, the load current (the output current supplied to the light source load **3**) is also reduced. In this situation, in order to substantially and constantly maintain the oscillating frequency of the switching element **162**, the signal generation circuit **21** may slightly reduce the duty ratio of the rectangular wave signal S**2** to slightly reduce the voltage V**2** and delay the discharge of the capacitor **55** to slightly increase the off-duration of the switching element **162**. This state is corresponding to the first dimming state.

The third control mode is allocated for the interval (second interval) in which the duty ratio of the PWM signal is in a range of 30 to 80%. In this interval (second interval), the signal generation circuit **21** reduces the duty ratio of the rectangular wave signal S**2** according to an increase in the duty ratio of the PWM signal, thereby reducing the voltage V**2** between the base and the emitter down to v**21** (<v**20**). A decrease in the voltage V**2** causes a decrease in a drawn current of the transistor **56** and discharging time of the capacitor **55** is increased. Therefore, the off-duration of the switching element **162** is increased and the oscillating frequency is reduced. Consequently, the load current is reduced. In this situation, the voltage V**1** of the third pin P**3** is kept equivalent to v**11**, and therefore the on-duration of the switching element **162** is constant. This state is corresponding to the second dimming state.

The second control mode is allocated for the interval (third interval) in which the duty ratio of the PWM signal is in a range of 80 to 90%. In this interval (third interval), the signal generation circuit **21** reduces the duty ratio of the rectangular wave signal S**1** according to an increase in the duty ratio of the PWM signal, reducing the voltage V**1** of the third pin P**3** down to v**12** (<v**11**). When the voltage V**1** is reduced, the on-duration of the switching element **162** is shorter, and thus the load current is reduced more. In this situation, in order to substantially and constantly maintain the oscillating frequency of the switching element **162**, the signal generation circuit **21** may slightly reduce the duty ratio of the rectangular wave signal S**2** to slightly reduce the voltage V**2** and delay the discharge of the capacitor **55** to slightly increase the off-duration of the switching element **162**. This state is corresponding to the third dimming state.

In the interval in which the duty ratio of the PWM signal is in a range of 90 to 100%, the signal generation circuit **21** is designed to constantly maintain the duty ratios of the rectangular wave signals S**1** and S**2**, thereby maintaining the third dimming state. Alternatively, in the interval in which the duty ratio of the PWM signal is in a range of 90% to 100%, the lighting apparatus **1** may set at least one of the voltage V**1** of the third pin P**3** and the voltage V**2** between the base and the emitter to the L level to stop the operation of the step-down chopper circuit **16** and turn the light source load **3** off. That is, the control circuit **4** may set at least one of the first predetermined value (corresponding to the reference voltage) determined by the rectangular wave signal S**1** and the second predetermined value (the voltage V**2** between the base and the emitter) determined by the rectangular wave signal S**2** to zero or less to stop the On and Off operation of the switching element **162**.

The control circuit **4** sets the oscillating frequency of the switching element **162** to be 1 kHz or more, preferably, several kHz or more. In brief, a minimum of the oscillating frequency (switching frequency) is 1 kHz.

Therefore, even in the second or third dimming state in which the oscillating frequency is reduced, a flicker frequency of the light source load **3** is relatively high and the interference between the flicker of the light source load **3** and the shutter speed (the exposure time), for example, at the time of the camera photographing can be avoided.

As mentioned in the above, the lighting apparatus **1** of the present embodiment includes: the switching element **162** connected to the DC power supply in series and controlled to be turned on and off at high frequency; the inductor **163** connected to the switching element **162** in series to flow a current from the DC power supply therein while the switching element **162** is turned on; the diode **161** serving to provide electromagnetic energy accumulated in the inductor **163**, while the switching element **162** is turned on, to the light source load **3** formed of a semiconductor light emitting device while the switching element **162** is turned off; and the control circuit **4** configured to control the operation of turning on and off the switching element **162**. The control circuit **4** includes, as the control mode of the switching element **162**, the first control mode, the second control mode, and the third control mode. In the first control mode, the control circuit **4** turns on and off the switching element **162** based on the predetermined oscillation frequency and the on-duration so as to flow a current through the inductor **161** in the critical mode or the discontinuous mode. In the second control mode, the control circuit **4** fixes the oscillation frequency of the switching element **162** and changes the on-duration of the switching element **162**. In the third control mode, the control circuit **4** fixes the on-duration of the switching element **162** and changes the oscillation frequency of the switching element **162**. The second control mode and the third control mode are selectively allocated for the intervals into which the range of the dimming ratio is divided. The control circuit **4** selects the first control mode to fully light the light source load **3**. When the dimming ratio is designated, the control circuit **4** selects the second control mode or the third control mode in accordance with the interval corresponding to the designated dimming ratio so as to dim the light source load **3** at the designated dimming ratio.

In other words, the lighting apparatus **1** of the present embodiment includes: the switching regulator (step-down chopper circuit) **16** configured to supply a direct current to the DC light source **3**; and the control circuit **4** configured to control the switching regulator **16** in order to supply a direct current having a magnitude corresponding to the dimming ratio to the DC light source **3**. The switching regulator **16** includes the switching element **162**. The control circuit **4** is configured to adjust the switching frequency and the on-duration of the switching element **162** in accordance with the dimming ratio. The control circuit **4** is configured to, when the dimming ratio falls within the first dimming range, adjust the switching frequency to a frequency associated with the first dimming range and adjust the on-duration to duration associated with the dimming ratio in a range of the on-duration associated with the first dimming range. The control circuit **4** is configured to, when the dimming ratio falls within the second dimming range different from the first dimming range, adjust the on-duration to duration associated with the second dimming range and adjust the switching frequency to a frequency associated with the dimming ratio in a range of the switching frequency associated with the second dimming range.

Further, in the lighting apparatus **1** of the present embodiment, the control circuit **4** is configured to, when the control circuit **4** lights the DC light source **3** at full power, adjust the switching frequency to the predetermined standard frequency

and adjust the on-duration to the predetermined standard on-duration. The combination of the standard frequency and the standard on-duration is selected based on the combination of the switching frequency and the on-duration associated with luminance of the DC light source **3** used as the unit amount of the dimming ratio. Besides, this configuration is optional.

Further, in the lighting apparatus **1** of the present embodiment, the switching regulator **16** includes the inductor **163** connected in series with the switching element **162**. The switching regulator **16** is configured to store energy from a power source in the inductor **163** while the switching element **162** is turned on, and to provide the energy stored in the inductor **163** to the DC light source **3** while the switching element **162** is turned off. The standard frequency and the standard on-duration are selected such that a current flows through the inductor **163** in a critical mode or a discontinuous mode. Besides, this configuration is optional.

Further, in the lighting apparatus **1** of the present embodiment, the control circuit **4** is configured to output the driving signal in accordance with the dimming ratio to the switching element **162**. The driving signal is a periodic voltage signal, and has the on-period in which the driving signal has the voltage exceeding the threshold for turning on the switching element **162**, and the off-period in which the driving signal has the voltage falling below the threshold. The on-duration is defined determined by the on-period of the driving signal. The switching frequency is determined by a frequency of the driving signal. Besides, this configuration is optional.

According to the lighting apparatus **1** of the present embodiment as described above, the control circuit **4** appropriately selects the second control mode for changing the on-duration of the switching element **162** and the third control mode for changing the oscillating frequency in a stepwise fashion, thereby dimming the light source load **3**.

Therefore, when comparing with the instance in which the light source load **3** is dimmed based on only the second control mode or the third control mode, the lighting apparatus **1** may expand the dimming range of the light source load **3** without flickering the light source load **3**. As a result, the lighting apparatus **1** can precisely (finely) control the luminance of the light source load **3** over the relatively wide range. Consequently, the lighting apparatus **1** of the present embodiment is capable of widening the dimming range of the light source load **3** with a relatively simple configuration.

In addition, the control of the dimming ratio in the dimming state is performed through the signal generation circuit **21** including the microcomputer as a main component, such that the lighting apparatus **1** that can precisely (finely) control the luminance of the light source load **3** with the relatively simple configuration can be realized.

Further, when the lighting apparatus **1** fully lights the lighting source load **3**, the control circuit **4** is operated in the first control mode in which the on-duration and the oscillating frequency of the switching element **162** are fixed and the switching element **162** is turned on and off in the critical or discontinuous mode in which a current discontinuously flows through the inductor **163**.

Therefore, even when the lighting apparatus **1** changes at least one of the on-duration and the oscillating frequency of the switching element **162** to dim the light source load **3**, the switching element **162** is turned on and off in the critical or discontinuous mode in which a current discontinuously flows through the inductor **163**. For example, the lighting apparatus **1** always turns the switching element **162** on and off in the intermittent mode (the critical mode or discontinuous mode) regardless of the dimming ratio.

In the intermittent mode, the switching element **162** is turned on at a timing when the current flowing through the inductor **163** is zero, such that the loss of the switching element **162** may be reduced more when compared with the continuous mode in which a current continuously flows through the inductor **163** without the sleep interval. That is, the switching element **162** is operated in the intermittent mode at all times, such that the lighting apparatus **1** according to the present embodiment can reduce the loss of the switching element **162** more and can realize the higher circuit efficiency, as compared with the instance in which the switching element **162** is operated in the continuous mode.

The lighting apparatus **1** further includes the current sensing unit (the resistor **43**) arranged to measure the current flowing in the switching element **162** and the capacitor **55** charged by the driving signal of the switching element **162**. The control circuit **4** is designed to turn off the switching element **162** when the current measured by the current sensing unit (the resistor **43**) reaches the first predetermined value. The control circuit **4** is designed to turn on the switching element **162** when the voltage across the capacitor **55** is the predetermined threshold value or less. The control circuit **4** is configured to vary the first predetermined value to change the on-duration of the switching element **162**. The control circuit **4** is configured to vary the second predetermined value determining the discharging speed of the capacitor **55** to change the oscillation frequency of the switching element **162**.

In other words, the control circuit **4** is configured to measure the driving current flowing from the control circuit **4** to the switching element **162** while the driving signal is outputted. The control circuit **4** is configured to, when the driving current rises to the first predetermined value, switch the driving signal from the on-period to the off-period. The control circuit **4** is configured to adjust the on-duration by means of adjusting the first predetermined value. Besides, this configuration is optional.

Further, the control circuit **4** includes: the capacitor **55** charged with the driving signal; and the discharging speed circuit (the transistor **56**) configured to determine the discharging speed of the capacitor **55** in accordance with the second predetermined value. The control circuit **4** is configured to, when the voltage across the capacitor **55** decreases down to the predetermined threshold, switch the driving signal from the off-period to the on-period. The control circuit **4** is configured to adjust the frequency of the driving signal by means of adjusting the second predetermined value. Besides, this configuration is optional.

Further, in the lighting apparatus **1** of the present embodiment, the control circuit **4** sets at least one of the first predetermined value and the second predetermined value to be zero or less to stop the turn-on and off operation of the switching element **162** and turn off the light source load **3**.

In other words, the control circuit **4** is configured to adjust the first predetermined value to the value not greater than zero in order to turn off the DC light source **3**. Alternatively, the control circuit **4** is configured to adjust the second predetermined value to the value not greater than zero in order to turn off the DC light source **3**. Besides, these configurations are optional.

Further, in the lighting apparatus **1** of the present embodiment, the control circuit **4** receives externally the dimming signal to select the control mode of the switching element **162** according to the dimming ratio determined by the corresponding dimming signal. In other words, the control circuit **4** is configured to receive the dimming signal indicative of the dimming ratio. Besides, this configuration is optional.

In the present embodiment, the dimming signal supplied to the lighting apparatus **1** is the rectangular wave of which the duty ratio is variable, but it is not limited thereto. For example, the dimming signal may be a DC voltage of which the voltage value is variable. In this example, the signal generation circuit **21** including the microcomputer realizes the dimming control by controlling the duty ratios of the rectangular wave signals S**1** and S**2** based on the amplitude (the voltage value) of the dimming signal. The lighting apparatus **1** is not limited as a configuration that inputs the dimming signal via the dimming signal lines **5**. For example, the lighting apparatus **1** may be a configuration in which an infrared light receiving module is mounted to receive the dimming signal by infrared communication.

Second Embodiment

The lighting apparatus **1** according to the present embodiment is different from the lighting apparatus **1** according to the first embodiment in terms of the configuration of the control circuit **4** and the control power supply circuit **7**, as shown in FIG. **10**. In the example of FIG. **10**, an external dimmer **6** outputting the rectangular wave voltage signal of 5 V, 1 kHz as the dimming signal is connected to the signal line connector **17** of the lighting apparatus **1** through the dimming signal lines **5**. Hereinafter, the same components as in the first embodiment are denoted by the same reference numerals and the description thereof will not be repeated here.

In the present embodiment, the DC power supply circuit **15** includes a step-up chopper circuit serving as a power factor improving circuit. The step-up chopper circuit is provided at the output terminal of the full-wave rectifier **151**.

The step-up chopper circuit has a general configuration in which an inductor **153** and a switching element **154** are connected in series to each other and are between the output terminals of the full-wave rectifier **151**, and a diode **155** and the smoothing capacitor **152** are connected in series to each other and connected across the switching element **154**. Therefore, a DC voltage (approximately 410 V) obtained by stepping-up and smoothing the supply voltage from the AC power supply **2** is generated at the output terminal (both ends of the smoothing capacitor **152**) of the DC power supply circuit **15**.

The step-up chopper circuit is operated by controlling the On and Off of the switching element **154** through a control circuit that includes an integrated circuit **156** including "L6562" from ST Micro Electronic Co. and peripheral components thereof. The operation of this kind of step-up chopper circuit is known, and therefore the operation thereof will not be described here.

As shown in FIG. **10**, in the present embodiment, the control power supply circuit **7** includes an IPD element **71** connected to the smoothing capacitor **152**, and peripheral components thereof.

The IPD element **71** is a so-called intelligent power device and for example, "MIP2E2D" from Panasonic is used for the element. The IPD element **71**, which is a three-pin integrated circuit having a drain terminal, a source terminal, and a control terminal, includes a built-in switching element **711** including a power MOSFET and a built-in controller **712** adapted to turn the switching element **711** on and off.

The control power supply circuit **7** includes a step-down chopper circuit constituted by the built-in switching element **711** in the IPD device **71**, an inductor **72**, a smoothing capacitor **73**, and a diode **74**. The control power supply circuit **7** includes a power supply circuit for the IPD element **71** constituted by a zener diode **75**, a diode **76**, a smoothing capacitor **77**, and a capacitor **78**.

According to the above configuration, the control power supply circuit **7** generates a constant voltage (for example, about 15 V) across the smoothing capacitor **73**. The constant voltage is used as a power supply voltage VC**1** for supplying the control power of the integrated circuit (a three-terminal regulator **79**, a microcomputer **80**, and a driver circuit **81**) to be described below. Since the smoothing capacitor **73** is uncharged until the IPD element **71** starts operation, other integrated circuits (the three-terminal regulator **79**, the microcomputer **80**, and the driver circuit **81**) are not activated.

Hereinafter, an operation of the control power supply circuit **7** will be described.

At the early stage of power up, when the smoothing capacitor **152** is charged by the output voltage of the full-wave rectifier **151**, a current flows along a path of the drain terminal of the IPD element **71**, the control terminal of the IPD element **71**, the smoothing capacitor **77**, the inductor **72**, and the smoothing capacitor **73**. Therefore, the smoothing capacitor **73** is charged with the polarity as shown in FIG. **10** and supplies an operating voltage to the IPD element **71**. Therefore, the IPD element **71** is activated and turns the built-in switching element **711** on and off

When the built-in switching element **711** of the IPD element **71** is turned on, a current flows along a path of the smoothing capacitor **152**, the drain terminal of IPD element **71**, the source terminal of IPD element **71**, the inductor **72** and the smoothing capacitor **73**, and thus the smoothing capacitor **73** is charged. When the switching element **711** is turned off, the electromagnetic energy stored in the inductor **72** is discharged to the smoothing capacitor **73** through the diode **74**. Therefore, the circuit including the IPD element **71**, the inductor **72**, the diode **74**, and the smoothing capacitor **73** acts as the step-down chopper circuit, such that the power supply voltage VC**1** obtained by stepping down the voltage across the smoothing capacitor **152** is generated across the smoothing capacitor **73**.

When the built-in switching element **711** in the IPD element **71** is turned off, the regenerative current flows through the diode **74**. However, the voltage across the inductor **72** is clamped to a sum voltage of voltage across the smoothing capacitor **73** and forward voltage of the diode **74**. Voltage obtained by subtracting the zener voltage of the zener diode **75** and the forward voltage of the diode **76** from the sum voltage becomes a voltage across the smoothing capacitor **77**. A built-in controller **712** in the IPD element **71** is adapted to control the On and Off operation of the switching element **711** so that the voltage across the smoothing capacitor **77** is constant. As a result, the voltage (the power supply voltage VC**1**) across the smoothing capacitor **73** is also constant.

When the power supply voltage VC**1** is generated across the smoothing capacitor **73**, the three-terminal regulator **79** starts supplying the power voltage VC**2** (e.g., 5 V) to the microcomputer **80** to start the On and Off control of the switching element **162** of the step-down chopper circuit **16**. The microcomputer **80** is supplied with the dimming signal from the external dimmer **6** and performs the dimming control.

As shown in FIG. **10**, the control circuit **4** includes the microcomputer **80** and is configured to generate the rectangular wave signal for driving the switching element **162** of the step-down chopper circuit **16** based on internal programs.

The microcomputer **80** has programs set to output the rectangular wave signal for driving the switching element **162** from a nineteenth pin P**19** according to the on-time (the pulse width) of the dimming signal from the external dimmer **6** supplied to a twenty-second pin P**22**.

Further, the control circuit **4** includes the driver circuit **81** configured to receive the output (the rectangular wave signal) from a nineteenth pin P**19** of the microcomputer **80** to actually drive the switching element **162**. Therefore, the microcomputer **80** controls the switching element **162** by receiving the dimming signal from the external dimmer **6** to control the current flowing through the light source load **3**, thereby realizing the dimming control.

Here, in the present embodiment, the three-terminal regulator **79** is, for example, "TA78L05" from Toshiba Co., and the microcomputer **80** is an 8-bit microcomputer "78K0/Ix2" from RENESAS Co., and the driver circuit **81** is "MAX15070A" from Maxim Co.

Besides, in the instance shown in FIG. **10**, the output capacitor **164** serving to smooth a pulsation component (ripple) of the output current supplied to the light source load **3** is illustrated by dashed lines.

The lighting apparatus **1** in the present embodiment selects the lighting state from the full lighting state, the first dimming state, and the second dimming state in accordance with the duty ratio (the dimming ratio) of the dimming signal, and operates in the selected lighting state. In the full lighting state, full lighting of the light source load **3** is performed. In the first and second dimming states, the light source load **3** is dimmed.

The first dimming state mentioned herein is a lighting state based on the third control mode in which the on-duration of the switching element **162** is approximately fixed and the oscillating frequency of the switching element **162** is variable.

The second dimming state is a lighting state in which the second control mode in which the oscillating frequency of the switching element **162** is approximately fixed and the on-duration of the switching element **162** is variable, is further selected from the first dimming state.

Next, an operation of the lighting apparatus **1** according to the present embodiment will be described with reference to FIGS. **11** to **14**.

FIG. **11** shows the dimming ratio (in parentheses in FIG. **11**) when the horizontal axis represents the duty ratio (On duty) of the dimming signal (the PWM signal) from the external dimmer **6** and the vertical axis represents the load current (an effective value of the output current supplied to the light source load **3**) and 308 mA is the full lighting (100%).

First, in the interval in which the duty ratio of the dimming signal is a range of 0 to 5%, the microcomputer **80** outputs the constant rectangular wave signal for driving the switching element **162** from the nineteenth pin P**19**.

In the present embodiment, the rectangular wave signal in this time is set so that the oscillating frequency is 30 kHz, the on-time is 5.8 μs and the voltage value is 5 V. Upon receiving this rectangular wave signal, the driver circuit **81** amplifies the voltage of the received signal to 15 V and supplies the amplified signal to the gate of the switching element **162** of the step-down chopper circuit **16** to turn the switching element **162** on and off.

In this situation, the lighting apparatus **1** is operated in the full lighting state and the output current of 308 mA in average flows through the light source load **3** (the dimming ratio of 100%). The lighting apparatus **1** continues the state (the full lighting state) until the duty ratio of the dimming signal reaches 5%.

In FIG. **12** a horizontal axis of each of (a) and (b) represents time, and (a) shows the voltage across the light source load **3** in the above state (the full lighting state), and (b) shows the current flowing through the light source load **3**. As apparent from the current illustrated in FIG. **12** (*b*), the On and Off operation of the switching element **162** is in a discontinuous mode and the switching element **162** is turned on at the timing when the current is zero, such that the switching loss of the switching element **162** is small.

Next, the third control mode is allocated for the interval in which the duty ratio of the dimming signal is a range of 5 to 80%. In brief, the interval in which the duty ratio of the dimming signal is in the range of 5 to 80% is corresponding to the second dimming range associated with the third control mode. In this interval, the microcomputer **80** gradually reduces the oscillating frequency of the rectangular wave signal supplied from the nineteenth pin P**19** according to the increase in the duty ratio of the dimming signal.

In the present embodiment, the microcomputer **80** approximately maintains the on-time of the rectangular wave signal as a predetermined value (5.8 μs) and gradually increases the off-time of the rectangular wave signal according to the increase in the duty ratio of the dimming signal. Here, the program of the microcomputer **80** is set so that, when the duty ratio of the dimming signal is 80%, the oscillating frequency of the rectangular wave signal supplied from the nineteenth pin P**19** is 8 kHz.

In this situation, the lighting apparatus **1** is operated in the first dimming state and an average of the output current flowing through the light source load **3** is controlled to 163 mA (the dimming ratio of 53%) as a lower limit.

In FIG. **13** a horizontal axis of each of (a) and (b) represents time, and (a) shows the voltage across the light source load **3** in the above state (the first dimming state), and (b) shows the current flowing through the light source load **3**.

The second control mode is allocated for the interval in which the duty ratio of the dimming signal is a range of 80% or more. In brief, the interval in which the duty ratio of the dimming signal is not less than 80% is corresponding to the first dimming range associated with the second control mode. In this interval, the microcomputer **80** gradually reduces the on-time of the rectangular wave signal supplied from the nineteenth pin P**19** according to the increase in the duty ratio of the dimming signal.

In the present embodiment, the microcomputer **80** changes the on-duration according to the duty ratio of the dimming signal while making the oscillating frequency approximately constant as a predetermined value (8 kHz). Here, the program of the microcomputer **80** is set so that, when the duty ratio of the dimming signal reaches 95%, the on-time of the rectangular wave signal supplied from the nineteenth pin P**19** is 0.5 μs.

In this situation, the lighting apparatus **1** is operated in the second dimming state and the average of the output current flowing through the light source load **3** is controlled to 2.5 mA (the dimming ratio of 0.8%) as a lower limit.

In FIG. **14** a horizontal axis of each of (a) and (b) represents time, and (a) shows the voltage across the light source load **3** in the above state (the second dimming state), and (b) shows the current flowing through the light source load **3**.

In the present embodiment, in the interval in which the duty ratio of the PWM signal is in a range of 95% or more, the lighting apparatus **1** sets the output from the nineteenth pin P**19** of the microcomputer **80** to the L level to stop the operation of the step-down chopper circuit **16**, thereby turning the light source load **3** off (see FIG. **11**).

According to the lighting apparatus **1** of the present embodiment as described above, the control circuit **4** dims the light source load **3** by appropriately selecting the second control mode for changing the on-duration of the switching element **162** and the third control mode for changing the oscillating frequency in a stepwise manner. Therefore, when

compared with the instance in which the light source load **3** is dimmed based on only the second control mode or the third control mode, the lighting apparatus **1** may expand the dimming range of the light source load **3** without flickering the light source load **3**. As a result, the lighting apparatus **1** can precisely (finely) control the brightness of the light source load **3** over the relatively wide range.

In addition, the control of the dimming ratio in the dimming state is performed with the microcomputer **80** of the control circuit **4**, such that the lighting apparatus **1** that can precisely (finely) control the brightness of the light source load **3** with the relatively simple configuration can be realized.

Other components and functions are the same as the first embodiment.

However, each lighting apparatus **1** described in the embodiments configures the illuminating fixture together with the light source load **3** comprising the semiconductor light emitting device (LED module).

In other words, this illuminating fixture includes the lighting apparatus **1**, and the light source load (DC light source) **3** configured to receive electric power from the lighting apparatus **1**.

As shown in FIG. **15**, in the illuminating fixture **10**, the lighting apparatus **1** serving as a power supply unit is received in a case separate from an appliance housing **32** of an LED module **30** (the light source load **3**). The lighting apparatus **1** is connected to the LED module **30** through the lead wires **31**.

Therefore, the illuminating fixture **10** can implement the slimness of the LED module **30** and increase the degree of freedom of the installation place of the lighting apparatus **1** as a separate mounting type of the power supply unit.

In the example of FIG. **15**, the appliance housing **32** is a cylinder shaped housing having an upper base and an opened bottom made of a metal material. The appliance housing has an opened surface (opened bottom surface) covered with a light diffusing plate **33**.

In the LED module **30**, a plurality of (herein, four) LEDs **35** are mounted on one surface of a substrate **34**. The LED module **30** is disposed in a relationship opposite to (facing) the light diffusing plate **33** within the appliance housing **32**.

The appliance housing **32** is buried in a ceiling **100** and is connected to the lighting apparatus **1** serving as the power supply unit disposed behind the ceiling through the lead wires **31** and the connectors **36**.

The illuminating fixture **10** is not limited to a separate mounting type configuration in which the lighting apparatus **1** as the power supply unit is received in the case separate from that of the LED module **30**. For example, the fixture **10** may be a power supply integrated type configuration in which the LED module **30** and the lighting apparatus **1** are received in the same housing.

Each lighting apparatus **1** described in the embodiments is not limited to be used for the illuminating fixture **10**. Each lighting apparatus **1** may be used for various light sources, for example, a backlight of a liquid crystal display, a copier, a scanner, a projector, and the like.

Alternatively, the light source load **3** emitting light by receiving the power supply from the lighting apparatus **1** is not limited to the light emitting diode (LED). For example, the light source load **3** may comprise a semiconductor light emitting element such as, for example, an organic EL device, a semiconductor laser device, etc.

Further, in each embodiment, the step-down chopper circuit **16** has a configuration in which the switching element **162** is connected to the low potential (negative) side of the output terminals of the DC power supply circuit **15** and the diode **161** is connected to the high potential (positive) side thereof, but it is not limited thereto. That is, the step-down chopper circuit **16** may have a configuration in which the switching element **162** is connected to the high potential side of the output terminals of the DC power supply circuit **15**, as shown in FIG. **16**.

The lighting apparatus **1** is not limited to the configuration in which the step-down chopper circuit **16** is applied thereto but as shown in FIGS. **17** to **19**, may include various switching power supply circuits other than the step-down chopper circuit formed between the DC power supply circuit **15** and the output connector **12**. FIG. **17** shows the instance in which the step-up chopper circuit is applied, FIG. **18** shows the instance in which a flyback converter circuit is applied, and FIG. **19** shows the instance in which the step-down and step-up chopper circuit is applied.

The step-up chopper circuit shown in FIG. **17** is configured so that the inductor **163** and the switching element **162** are connected in series between the output terminals of the DC power supply circuit **15**, and the diode **161** and the output capacitor **164** are connected in series between the both terminals of the switching element **162**.

The flyback converter circuit shown in FIG. **18** is configured so that a primary winding of a transformer **166** and the switching element **162** are connected in series between the output terminals of the DC power supply circuit **15**, and the diode **161** and the output capacitor **164** are connected in series to each other and connected in parallel with a secondary winding of the transformer **166**.

The step-down and step-up chopper circuit shown in FIG. **19** is configured so that the inductor **163** and the switching element **162** are connected in series between the output terminals of the DC power supply circuit **15**, and the diode **161** and the output capacitor **164** are connected in series to each other and connected in parallel with the inductor **163**.

The invention claimed is:

1. A lighting apparatus comprising:

a switching regulator configured to supply a direct current to a DC light source; and

a control circuit configured to control said switching regulator in order to supply a direct current having a magnitude corresponding to a dimming ratio to the DC light source,

wherein said switching regulator includes a switching element, and

said control circuit is configured to adjust a switching frequency and on-duration of said switching element in accordance with the dimming ratio, and

said control circuit is configured to, when the dimming ratio falls within a first dimming range, adjust the switching frequency to a frequency associated with the first dimming range and adjust the on-duration to duration associated with the dimming ratio in a range of the on-duration associated with the first dimming range, and

said control circuit is configured to, when the dimming ratio falls within a second dimming range different from the first dimming range, adjust the on-duration to duration associated with the second dimming range and adjust the switching frequency to a frequency associated with the dimming ratio in a range of the switching frequency associated with the second dimming range.

2. A lighting apparatus as set forth in claim **1**, wherein

said control circuit is configured to, when said control circuit lights the DC light source at full power, adjust the switching frequency to a predetermined standard frequency and adjust the on-duration to predetermined standard on-duration, and

a combination of the standard frequency and the standard on-duration is a combination of the switching frequency and the on-duration associated with luminance of the DC light source used as a unit amount of the dimming ratio.

3. A lighting apparatus as set forth in claim **2**, wherein

said switching regulator includes an inductor connected in series with said switching element, and

said switching regulator is configured to store energy from a power source in said inductor while said switching element is turned on, and to provide the energy stored in said inductor to the DC light source while said switching element is turned off, and

the standard frequency and the standard on-duration are selected such that a current flows through said inductor in a critical mode or a discontinuous mode.

4. A lighting apparatus as set forth in claim **1**, wherein

said control circuit is configured to output a driving signal in accordance with the dimming ratio to said switching element, and

the driving signal is a periodic voltage signal, and has an on-period in which the driving signal has a voltage exceeding a threshold for turning on said switching element, and an off-period in which the driving signal has the voltage falling below the threshold, and

the on-duration is determined by to the on-period of the driving signal, and

the switching frequency is determined by a frequency of the driving signal.

5. A lighting apparatus as set forth in claim **4**, wherein

said control circuit is configured to measure a driving current flowing from said control circuit to said switching element while the driving signal is outputted, and

said control circuit is configured to, when the driving current rises to a first predetermined value, switch the driving signal from the on-period to the off-period, and,

said control circuit is configured to adjust the on-duration by means of adjusting the first predetermined value.

6. A lighting apparatus as set forth in claim **5**, wherein

said control circuit is configured to adjust the first predetermined value to a value not greater than zero in order to turn off the DC light source.

7. A lighting apparatus as set forth in claim **4**, wherein

said control circuit includes:

a capacitor charged with the driving signal; and

a discharging speed circuit configured to determine a discharging speed of said capacitor in accordance with a second predetermined value, and

said control circuit is configured to, when a voltage across said capacitor decreases down to a predetermined threshold, switch the driving signal from the off-period to the on-period, and,

said control circuit is configured to adjust the frequency of the driving signal by means of adjusting the second predetermined value.

8. A lighting apparatus as set forth in claim **7**, wherein

said control circuit is configured to adjust the second predetermined value to a value not greater than zero in order to turn off the DC light source.

9. A lighting apparatus as set forth in claim **1**, wherein

said control circuit is configured to receive a dimming signal indicative of the dimming ratio.

10. A lighting apparatus as set forth in claim **1**, wherein

a minimum of the switching frequency is 1 kHz.

11. A lighting apparatus as set forth in claim **1**, wherein

the first dimming range is defined as a range having a lower limit not less than a predetermined dimming ratio, and

the second dimming range is defined as a range having an upper limit less than the predetermined dimming ratio, and

the range of the switching frequency associated with the second dimming range has an upper limit not greater than the frequency associated with the first dimming range, and

the duration associated with the second dimming range is not greater than the duration associated with the predetermined dimming ratio in the range of the on-duration associated with the first dimming range.

12. A lighting apparatus as set forth in claim **1**, wherein

the second dimming range is defined as a range having a lower limit not less than a predetermined dimming ratio, and

the first dimming range is defined as a range having an upper limit less than the predetermined dimming ratio, and

the range of the on-duration associated with the first dimming range has an upper limit not greater than the duration associated with the second dimming range, and

the frequency associated with the first dimming range is not greater than the frequency associated with the predetermined dimming ratio in the range of the switching frequency associated with the second dimming range.

13. An illuminating fixture comprising:

a lighting apparatus defined by claim **1**; and

a DC light source configured to receive electric power from said lighting apparatus.

* * * * *