**IN THE UNITED STATES DISTRICT COURT**
**FOR THE WESTERN DISTRICT OF TEXAS**
**WACO DIVISION**

| | | |
|---|---|---|
| **JIAXING SUPER LIGHTING ELECTRIC APPLIANCE CO., LTD. AND OBERT, INC.,** | § | |
| Plaintiffs, | § | CASE NO. 6:20-CV-00018-ADA |
| v. | § | |
| **CH LIGHTING TECHNOLOGY CO., LTD., ELLIOTT ELECTRIC SUPPLY INC. AND SHAOXING RUISING LIGHTING CO., LTD.,** | § | JURY TRIAL DEMANDED |
| Defendants. | § | |

**AMENDED MEMORANDUM OPINION & ORDER**

Came on for consideration this date are Plaintiffs' Motion for Supplemental Damages, Ongoing Royalty and Enhancement of Post-Verdict Damages, ECF No. 287; Defendants' Motion for Judgment as a Matter of Law, ECF No. 291; and Defendants' Motion for New Trial, ECF No. 292. The Court presided over a four-day jury trial from November 1, 2021 to November 4, 2021. *See* ECF Nos. 237–40. At the end, the Jury found Defendants CH Lighting Technology Co., Ltd. ("CH Lighting" or "CH"), Elliott Electric Supply Inc. ("Elliott"), and Shaoxing Ruising Lighting Co. Ltd. ("Ruising") (collectively, "Defendants") to have willfully infringed claims of three patents of Plaintiffs Jiaxing Super Lighting Electric Appliance Co., Ltd. ("Super Lighting") and Obert, Inc. ("Obert") (collectively, "Plaintiffs" or "Super Lighting"). ECF No. 230.

For the reasons set forth below, the Court will deny Defendants' motions for judgment as a matter of law and new trial, and grant-in-part Plaintiffs' motion for supplemental damages, ongoing royalty and enhancement of post-verdict damages.



Current Lighting
EX1033
Page 1 of 49

## I. BACKGROUND

On January 10, 2020, Plaintiffs initiated this Action by filing a complaint alleging that Defendants infringe certain U.S. patents. ECF No. 1 (the "Complaint"). On March 16, 2020, Plaintiffs filed an amended complaint alleging infringement of U.S. Patent Nos. 10,295,125 (the "'125 patent"), 10,342,078, 10,352,540 (the "'540 patent"), and 10,426,003, 9,939,140 (the "'140 patent"), 10,378,700, 10,448,479, and 10,560,989. ECF No. 21 (the "FAC"). CH answered on December 3, 2020. ECF No. 67. The Plaintiffs' patents and Defendants' accused products are directed to light-emitting diode (LED) tube lamps and features thereof. Super Lighting is a Chinese corporation and Obert is its North American affiliate. ECF No. 21 ¶¶ 1, 2. CH and Ruising are also Chinese corporations and Elliott is a customer of some sort based out of Texas. *See, e.g.*, ECF No. 237 at 40:12–20, 46:18–22, 78:9–79:10. Ruising is the subsidiary of CH charged with selling CH products.[1] *See id.* at 78:9–79:10. Super Lighting and CH are rivals in the tube lamp space. Ruising is owned at least by Caiying Gan, CEO of CH, and Qingbo "Jack" Jiang, who also runs Ruising. *See id.* at 78:9–79:10. Before he was at Ruising, Jack Jiang was a Super Lighting employee. He left in 2014 to join Ruising and later convinced Jun Yang, technical assistant and secretary to Super Lighting's CEO and founder, to join him there. *See id.* at 82:15–83:7. According to Super Lighting's CEO, Mr. Yang had access to Super Lighting's most confidential, technical documents. *Id.* at 82:24–83:5. Mr. Yang is now a product manager at Ruising. *See id.* at 204:1–9.

On October 6, 2021, the Court held a pretrial conference in this Action. *See* ECF Nos. 190, 191. Trial commenced on November 1, 2021. *See* ECF No. 216. At trial, Plaintiffs had narrowed their case such that they only asserted infringement of claim 1 of the '125 patent, claims 1, 4, 5, 24, 28, and 31 of the '140 patent, and claims 13 and 14 of the '540 patent. Shortly before trial,

[1] When the Court refers to CH it is oftentimes referring to CH and Ruising collectively.

Defendants stipulated to infringement for all but one accused product—Defendants argued to the Jury that the LT2600 integrated circuit did not infringe the asserted claims of the ’140 patent. Defendants also presented an invalidity case against the ’125, ’140, and ’540 patents (the “Asserted Patents”) to the Jury. *Id.* at 8–9.

On the third day of trial, the Court granted a pre-verdict motion for judgment as a matter of law (JMOL) under Federal Rule of Civil Procedure 50(a) on the issue of the invalidity relating to the ’125 patent and the ’540 patents. ECF No. 239 at 47:8–53:11. The Court held that there was not a legally sufficient evidentiary basis upon which a reasonable jury could have concluded that: claim 1 of the ’125 patent was invalid based on any of Defendants’ three prior-art grounds against that patent; or the asserted claims of the ’540 patent were invalid based on one of Defendants’ two prior-art grounds against that patent. *Id.* Defendants based these deficient prior-art grounds on system prior art—physical lighting tubes—that Defendants failed to introduce into evidence before evidence closed. *See id.*

On November 4, 2021, the Jury rendered a unanimous verdict, finding that Defendants infringed all Asserted Claims and that Defendants failed to prove that any Asserted Claim was invalid. ECF No. 230. The Jury awarded damages in the amount of $13,872,872 from CH and Ruising and $298,454 from Elliott and further found that CH and Ruising willfully infringed.

On November 24, 2021, Plaintiffs moved for enhanced damages and a permanent injunction. ECF Nos. 233, 234. On December 2, 2021, Plaintiffs moved for attorneys’ fees and entry of judgment. ECF Nos. 241, 242. On July 21, 2022, the Court granted-in-part Plaintiff’s Motion for Enhancement of Damages under 35 U.S.C. § 284 and denied Plaintiffs’ Motion for exceptional case, attorney fees and for a permanent injunction. ECF No. 281.

On August 19, 2022, Plaintiffs filed a motion for supplemental damages, ongoing royalty and enhancement of post-verdict damages. ECF No. 287. And on August 26, 2022, Defendants filed a motion for judgment as a matter of law and a motion for a new trial. ECF Nos. 291–92. The parties briefing on these post-trial motions was completed on September 16, 2022. *See* ECF Nos. 303, 305, 306. These motions are now ripe for judgment.

## II. MOTION FOR JUDGMENT AS A MATTER OF LAW

### A. Legal Standard

A court may grant JMOL against a prevailing party only if a reasonable jury would not have a legally sufficient evidentiary basis to find for the non-moving party on that issue. Fed. R. Civ. P. 50(a)(1). In deciding a renewed JMOL motion, a "court must draw all reasonable inferences in favor of the nonmoving party, and it may not make credibility determinations or weigh the evidence." *Taylor-Travis v. Jackson State Univ.*, 984 F.3d 1107, 1112 (5th Cir. 2021). The court must disregard all evidence favorable to the moving party that the jury is not required to believe. *Id*. This is because "[c]redibility determinations, the weighing of the evidence, and the drawing of legitimate inferences from the facts are jury functions, not those of a judge." *Wellogix, Inc. v. Accenture, L.L.P.*, 716 F.3d 867, 874 (5th Cir. 2013).

Courts grant JMOL for the party bearing the burden of proof only in extreme cases, when the party bearing the burden of proof has established its case by evidence that the jury would not be at liberty to disbelieve, and the only reasonable conclusion is in its favor. *Mentor H/S, Inc. v. Medical Device All., Inc.*, 244 F.3d 1365, 1375 (Fed. Cir. 2001). JMOL is inappropriate if the record evidence is such that reasonable and fair-minded men in the exercise of impartial judgment might reach different conclusions. *Laxton v. Gap Inc.*, 333 F.3d 572, 579 (5th Cir. 2003).

A jury verdict must stand unless there is a lack of substantial evidence, in the light most favorable to the successful party, to support the verdict. *Am. Home Assur. Co. v. United Space All., LLC*, 378 F.3d 482, 487 (5th Cir. 2004). Substantial evidence is more than a scintilla, but less than a preponderance. *Nichols v. Reliance Standard Life Ins. Co.*, 924 F.3d 802, 808 (5th Cir. 2019). Thus, JMOL must be denied if a jury's verdict is supported by legally sufficient evidence that amounts to more than a mere scintilla. *Laxton*, 333 F.3d at 585.

**B. Discussion**

Defendants move for judgment as a matter of law under Rule 50(b) for three reasons: (1) that there is not substantial evidence to support the Jury's validity findings; (2) that there is not substantial evidence to support the Jury's infringement findings; and (3) and that there is not substantial evidence to support a finding of willfulness. *See, generally*, ECF No. 291. The Court will address each of these in turn below. As a preliminary matter, however, the Court will address the Plaintiffs' arguments that because this is a renewed motion for judgment as a matter of law under Rule 50(b), the Defendants are strictly limited to those arguments that presented under their original Rule 50(a) motion.

Although Defendants cite only the language of Rule 50(a), their motion is actually a ***renewed*** motion for JMOL under Rule 50(b). A party forfeits the right to move under Rule 50(b) by failing to move first under Rule 50(a), and issues raised for the first time in a Rule 50(b) motion cannot be considered. *i4i Ltd. P'ship v. Microsoft Corp.*, 598 F.3d 831, 845 (Fed. Cir. 2010), *aff'd*, 564 U.S. 91 (2011); *see also VLSI Tech. LLC v. Intel Corp.*, No. 6:21-CV-057-ADA, 2022 WL 1477725, at *7 (W.D. Tex. May 10, 2022).

Plaintiffs primarily raise two issues of the impropriety of Defendants' ***renewed*** motion for JMOL under Rule 50(b).

*First*, Plaintiffs argue that as to infringement and willful infringement, "Defendants failed to cite any specific basis why it was entitled to JMOL in their Rule 50(a) motion . . . . [n]or did Defendants raise any of the specific arguments in their Rule 50(a) motion that they are now making." ECF No. 299 at 4. According to Plaintiffs, "[t]he transcript portions cited by Defendants in their brief did not form any basis to request a Rule 50(b) motion on issues such as infringement and willfulness." *Id.* (citing ECF No. 291 at 3, which cites "Trial Tr. Day 3" at 67:22–71:10 (requesting JMOL on invalidity and damages)). Moreover, according to Plaintiffs, "regarding non-infringement, Defendants now rely ([ECF No. 291] at 15-17) almost entirely on Dr. Zane's testimony. But Defendants did not raise any argument in any pre-verdict JMOL based on the purportedly missing elements identified by Dr. Zane." *Id.* In their response brief, Plaintiffs preemptively respond to Defendants' reliance on the liberal interpretation of rule 50(a) in the Fifth Circuit. *Id.* Plaintiffs argue that even under the liberal Fifth Circuit standard, Defendants have not placed Plaintiffs or the Court on notice of any specific claim element that Plaintiffs supposedly failed to prove.

In reply, Defendants contend that "CH specifically moved for JMOL of non-infringement, citing 'insufficient evidence to establish . . . that Defendants infringe any claim of' the '140 patent." ECF No. 305 at 9 (citing Day 2 Tr. 100:14–24). According to Defendants, [t]hat motion preserves CH's arguments." *Id.* Defendants rely on *Navigant Consulting, Inc. v. Wilkinson*, 508 F.3d 277, 288 (5th Cir. 2007), which held that "Rule 50(b) is construed liberally, and [courts] may excuse 'technical noncompliance' when the purposes of the rule are satisfied." *Id.* Defendants also rebut Plaintiffs' allegation that Defendants failed to preserve its Rule 50(b) motion because Defendants argue that "CH specifically moved for JMOL because the evidence

was 'insufficient . . . to establish that Defendants willfully infringed any asserted claim of any asserted patent.'" *Id.* at 10 (citing Day 2 Tr. 100:25–101:11).

The Court will address any alleged new non-infringement or willfulness argument as it comes up below.

*Second*, Plaintiffs argue that "at least with respect to the product prior art, Defendants' motion for JMOL of invalidity is nonsensical because the Court granted Plaintiffs' JMOL on that issue before Plaintiffs' rebuttal case." *Id.* The Plaintiffs rely on Rule 50, which states that that JMOL may be granted only "if a party has been fully heard on an issue during a jury trial." Because the Court had already granted JMOL, Plaintiffs' validity expert, Dr. Phinney, did not address the '125 Patent or the product prior art. *Id.* (citing Trial Tr. Day 2 at 64:3–19, 82:14–25).

In reply, Defendants argue only even though Plaintiffs did not have the opportunity to present their case regarding the '125 Patent, "they admit that their proof would have mirrored the insufficient evidence they offered on 'the same element' of the '540 patent." ECF No. 305 at 4. According to Defendants. "[a] vague promise of 'more of the same' should not defeat JMOL." *Id.* The defendants do not address the product prior art arguments.

The Court agrees with the Plaintiffs and finds that the Defendants have waived these arguments regarding the '125 Patent or the product prior art. *VLSI*, 2022 WL 1477725, at *7 (new argument waived by failure to raise in pretrial JMOL even though sufficiency of proof of element was raised). Accordingly, Defendants' motion for JMOL as to the validity of the '125 Patent or the product prior art is hereby denied.

**i. Substantial Evidence Supports the Jury's Validity Findings for the '140 and '540 Patents**

At trial, Defendants asserted that Claims 13 and 14 of the '540 patent and Claims 1, 4, and 24, and dependent claims 4, 28, and 31 of the '140 patent were invalid. The Jury found that

Defendants did not prove by clear and convincing evidence that those claims of the ’540 patent ’140 patent were invalid. ECF No. 230. Defendants argue, however, that this Court should enter JMOL of invalidity because “CH’s proof on invalidity showed how every purported advance was apparent in the prior art . . . [and] Plaintiffs failed to identify any inventive insight and repeatedly contradicted the plain language of both the patents and prior art.” ECF No. 305 at 8.

### 1. Substantial evidence supports the Jury’s Validity Findings for the ’540 Patent

Defendants argue that the prior art renders the asserted claims of the ’540 Patent invalid because “[t]wo separate sets of prior art references make that clear: (1) U.S. Patent Nos. 9,970,640 B2 (“Zhao”) and 8,360,599 B2 (“Ivey II”); and (2) the MaxLite G Series L18T8DF440-G.” ECF No. 291 at 4.

#### a. Zhao and Ivey do not render Claim 13 obvious

Substantial evidence supported the Jury’s finding that Defendants failed to prove invalidity of claims 13 and 14 of the ’540 Patent by clear and convincing evidence. Defendants argue that Plaintiffs identified only two putative departures from prior-art, conventional LEDs: (1) an LED strip disposed on the “inner circumferential surface” of the tube; and (2) a “diffusion film” “disposed on” the lamp tube. ECF No. 291 at 6. Defendants contend that Zhao and Ivey render claim 13 obvious because they disclose, teach, or suggest these very same two differences that Plaintiffs allegedly identified as the difference between the claimed invention and the prior art. *See id*.

The Court disagrees with the Defendants. First, the Jury could have reasonably credited Dr. Phinney’s testimony and found that Defendants failed to prove an LED strip disposed on the “inner circumferential surface” of a lamp tube. *MobileMedia Ideas LLC v. Apple Inc.*, 780 F.3d 1159, 1168 (Fed. Cir. 2015) (citing *Kinetic Concepts, Inc. v. Smith & Nephew, Inc.*, 688 F.3d

1342, 1362 (Fed. Cir. 2012) ("In light of the jury's determination that [Defendant] failed to prove obviousness, we must infer that the jury found [Plaintiff's] experts to be credible and persuasive on this point")). For this element, Defendants relied on a single figure (Fig. 4, below) from the Zhao reference (ECF No. 296-25, DTX-60), and the corresponding text:

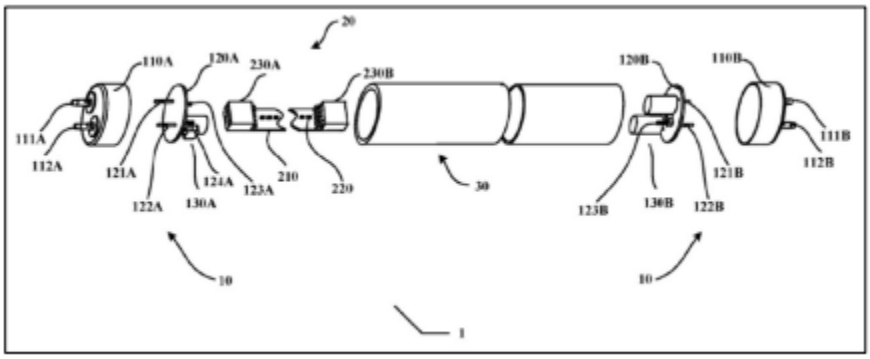


Day 2 Tr. at 303:3–9. As Dr. Phinney explained, the figure does not show how the parts fit together, and therefore does not teach a person of ordinary skill in the art that the LED strip is "disposed on the inner circumferential surface" as claimed. Day 3 Tr. at 11:4–10. Likewise, the corresponding text in Zhao merely indicates that the light strip is "inside" the tube. *Id.* at 11:13–24; ECF No. 296-25 at 4:16–17, 8:35–41.) Defendants do not explain why a reasonable Jury could have not credited it.

Moreover, at trial, Defendants failed to present a credible case of their own on this element. Defendants' expert offered only six lines of testimony on the issue. (Day 2 Tr. at 303:4–9.) Nothing in his testimony explained why a skilled artisan would infer that the light strip was disposed on an inner circumferential surface either from the figure or the cited portions of the specification teaching that the light strip was merely "inside" the tube. The Jury certainly was not required to credit Dr. Lebby's testimony over the more detailed explanation from Dr. Phinney.

In a possible attempt to reconcile the Jury's recognition of the apparent inadequacy of Dr. Lebby's trial testimony, Defendants raise two, completely new arguments in their motion: (1) that Zhao "shows nothing between the LED strip and the tube's 'inner circumferential surface,'" and (2) that "common sense would inform skilled artisans that disposing the strip directly on the tube was one option." ECF No. 291 at 5. Raised for the first time post-trial, both arguments are procedurally improper. *See Erfindergemeinschaft UroPep GbR v. Eli Lilly & Co.*, 276 F. Supp. 3d 629, 653 (E.D. Tex. 2017), *aff'd*, 739 F. App'x 643 (Fed. Cir. 2018).

**b. MaxLite G Series does not render claim 13 obvious**

Defendants asserted the same MaxLite tube against the '540 Patent as they did against the '125 Patent, and their case failed on pre-verdict JMOL for the same reasons. Trial Tr. Day 3 at 52:23–53:9. For the '540 Patent, Defendants have nothing but the same conclusory assertions that the MaxLite tube was prior art, ECF No. 291 at 6 (citing Trial Tr. Day 2 at 291:10–14)), and that it satisfied the requirement of a light strip disposed on the tube's "inner circumferential surface." ECF No. 291 at 6 (citing Trial Tr. Day 2 at 296:7–19). The Court agrees with Plaintiffs that Defendants' JMOL motion as to the MaxLite tube fails for the same reasons with respect to the '540 Patent that it does for the '125 Patent and that substantial evidence supported the Jury's determination that the MaxLite G Series does not render claim 13 obvious.

**c. Neither the MaxLite lamp nor the Zhao reference render Claim 14 obvious**

Defendants contend that dependent Claim 14 is rendered obvious in view of the MaxLite lamp or in view of the Zaho reference. ECF No. 291 at 7. Because the Court finds that substantial evidence supports the Jury's verdict that Claim 13 is not rendered obvious, the Court finds that substantial evidence also supports the Jury's verdict that Claim 14 is not obvious.

### 2. Substantial evidence supports the Jury's Validity Findings for the '140 Patent

Defendants assert that—contrary to the Jury's verdict—all asserted claims of the '140 Patent are rendered obvious in view of prior art references. ECF No. 291 at 10–15. Plaintiffs respond that "[a] reasonable jury could, and did, conclude that none of Defendants' references contained the claimed 'pulse generating circuit' that controls the switch that keeps the lights on, or turns them off." ECF No. 299 at 17. The Court will address each of their arguments in turn below.

#### a. Substantial evidence supports the Jury's finding that Claim 1 is not invalid in view of Ono

Defendants first argue that Claim 1 was anticipated by International Patent Application WO 2012/066822 ("Ono"). ECF No. 291 at 10. Claims 1 and 4 both recite a circuit that attempts to avoid unintended shocks by engaging the main circuit only when the LED lamp is properly installed. At trial, Plaintiffs' expert conceded that Ono uses pulses to detect whether installation is proper and, if it is, to turn on the light. Day 3 Tr. 90:23–91:2. But he argued that Claim 1 requires the opposite order of operations: It "goes right ahead and turns on the light first and then determines if there's a proper installation." *Id.* at 91:1–5. Defendants contend that Plaintiffs' expert "cited no language in the '140 Patent for that conclusion." ECF No. 291 at 11. According to Defendants, "[n]othing in the claim requires turning the lamp on before detecting proper installation." *Id.*

Plaintiffs argue that Ono does not anticipate Claim 1 because Ono operated in what Dr. Phinney explained was the "old way," by checking the power line to see if the light switch could be turned on in the first place. ECF 299 at 17. According to Plaintiffs, "[t]hat way was different from the claimed invention, which turns the light on before deciding whether it should stay on or be turned off." *Id.* The Court agrees with the Plaintiffs. At trial, Dr. Zane tried to equate Ono

with the ’140 Patent by arguing that (1) the “pulse generating circuit generates a pulse and injects a signal … into the power loop,” (Day 2 Tr. at 197:4–5), and (2) “the detection determining circuit” then makes a “decision [that] goes directly to turn the switch on or off.” (*Id.* at 197:9–21.) But the Jury was free to weigh the credibility of the two experts and adopt Dr. Phinney’s description of Ono over Dr. Zane’s and find that Ono did not anticipate. *MobileMedia Ideas*, 780 F.3d at 1168. There is substantial evidence to support the Jury’s verdict here. *See* JTX-1 at 59:5–7 (stating the pulse generator controls the LEDs to turn on and off); *see also id.* at 59:18–20 (stating the detection circuit controls the switch to keep the LEDs on).

**b. Substantial Evidence Supports the Jury’s finding that Claims 1, 4, 5, 24, 28, And 31 Are Not obvious Over Ivey I**

Defendants also argue that the Jury lacked substantial evidence to find that claims 1, 4, 5, 24, 28, and 31 are not obvious over Ivey I. ECF No. 291 at 10. Yet because Defendants failed to move for JMOL on Ivey I against ’140 Patent claim 1, their renewed JMOL as to that claim has been forfeited. *See* Trial Tr. Day 3 at 68:1–70:11.

As to the remaining claims, the Court finds that Ivey 1 lacks two critical elements that a reasonable Jury could have found did not render these claims obvious.

*First*, it has the same defect as Ono—it lacks the required “pulse generating circuit” that controls the same switch that turns the lights on and off and represents the “old way” of doing things. Dr. Phinney explained that Ivey I’s alleged “pulse generator” did not control the switch for the LEDs but was instead an oscillator to switch a different element (test load). Trial Tr. Day 3 at 94:17–25. This switch for the test load ECF No. 296-21, DTX-65, FIG. 3, Element 135 does not control the switch that turns the LEDs on and off. Trial Tr. Day 3 at 94:17–95:12. Instead,

Ivey I's light switch is elsewhere (DTX-65, FIG. 3, Element 175), and relied on different circuitry and control logic. Trial Tr. Day 3 at 95:17–21.

*Second*, and more simply, Ivey I is not even a "tube lamp." Ivey I taught only "an 'LED-based light' with a 'first connection point' and a 'second connection point.'" ECF No. 291 at 12 (citing DTX-65 ¶ 37) Defendants' expert did not argue that Ivey I taught a tube, just that a skilled artisan would "think of" a tube as an "example." Trial Tr. Day 2 at 213:13–15. And a reasonable Jury could have agreed with Dr. Phinney, who explained that Ivey itself did not teach or suggest a tube. Trial Tr. Day 3 at 92:23–93:1. Because the Jury could have reasonably sided with Dr. Phinney on either missing element, JMOL is unwarranted.

But Defendants and Dr. Zane further failed to demonstrate that Ivey I contains the required "detection result latching circuit" of Claims 4, 5, 24, 28, and 31. As argued by the Plaintiffs, Defendants have not provided sufficient evidence that "the alleged latching circuit outputs a 'high logic value when either the stored detected result or the pulse signal output terminal … has a high logic values' required by the claims." ECF No. 299 at 18–19.

In short, the Court finds that substantial evidence supports the Jury's finding that claims 1, 4, 5, 24, 28, and 31 are not obvious over Ivey I.

#### c. Substantial Evidence Supports the Jury's Finding That Claims 1, 4, 5, 24, 28, and 31 Are Not Obvious Over Ivey 1 In View of Sadwick

Similarly, the Court also finds that Defendants' arguments that the asserted claims are obvious over Ivey 1 in view of international patent application No. WO 2015/066566 ("Sadwick") to be unconvincing. Defendants attempt to fix Ivey I's shortcomings by combining it with Sadwick, a reference cited by the Examiner during prosecution. ECF No. 291 at 13. Specifically, Defendants argue that Sadwick makes up for any deficiency of Ivey I "[b]ecause

Sadwick discloses using a pulse to turn on the load switch, *id.* ¶ 83, skilled artisans would have understood pulses were one method for ensuring that the latch circuit turned power back on when "the hazard fault condition had cleared." *Id.* at 14.

As a preliminary matter, the Court finds that because Defendants failed to move for JMOL on Ivey I against '140 Patent claim 1, their renewed JMOL as to that claim has been forfeited. *See* Trial Tr. Day 3 at 68:1–70:11. Therefore, the Court considers the Defendants' arguments regarding combining the Ivey I and Sadwick references for the remaining asserted claims.

In the primary, Plaintiffs argue that Defendants' conclusory modification to combine Ivey I and Sadwick was presented to the Jury and Defendants failed to convince the Jury that a POSITA would have had any motivation or reasoning to modify Ivey I's circuit to do so. ECF No. 299 at 19 (citing *Arctic Cat Inc. v. Bombardier Recreational Prod. Inc.*, 876 F.3d 1350, 1359 (Fed. Cir. 2017) (it is a "fact question [] [regarding] whether one of ordinary skill in the art had a motivation to combine the prior art to achieve the claimed combination")).

The Court agrees. At trial, Dr. Phinney explained that Dr. Zane's modifications to Ivey I's structure were significant, and that the art itself presented no motivation to make those modifications. Trial Tr. Day 3 at 100:1–102:15, 104:13–106:20. A reasonable Jury could have concluded that Defendants had not met their burden on motivation to combine in light of the expert testimony.

**d. Secondary considerations**

Because the Court finds that substantial evidence supports the Jury's verdict that none of the asserted claims are invalid, the Court need not reach the Defendants arguments regarding secondary considerations.

### ii. Substantial Evidence Supports the Jury's Infringement Findings for the '140 Patent

The Jury found that the accused devices using the LT2600 and the LT2600G chips infringe the '140 patent.[2] Defendants seek a JMOL on these findings. Defendants argue two reasons why this JMOL on noninfringement should be granted.[3] *First*, Defendants argue that the LT2600's "patented grid impedance monitoring algorithm" is different from the '140 Patent because it "detect[s] proper installation [of a tube lamp] based on grid impedance, rather than voltage alone." ECF No. 291 at 16. Plaintiffs respond that "the claims say nothing about what electrical property needs to be measured to provide the 'sampling signal' to determine proper installation." ECF No. 299 at 14.

The '140 Patent itself explains that the detection circuitry may detect when one end of a tube lamp is connected to a "high impedance, such as a person." *Id.* Critically, Plaintiffs argue that Dr. Zane admitted that the LT2600's "algorithm" measured impedance via voltage and current. *Id.* Accordingly, a reasonable Jury could have found that the LT2600's "patented grid impedance monitoring algorithm" infringes on the '140 Patent.

*Second*, Defendants argue that the LT2600 lacks a pulse generator or pulses. Defendants argue that Plaintiffs' own experimental measurements confirmed the difference between the LT2600 and the patented invention. ECF No. 291 at 16. According to Defendants, "[f]or the patented invention, voltage measurements showed 'relatively large spikes and smaller spikes,'

---

[2] The parties agreed that the LT2600 and LT2600G chips were identical for purposes of infringement. Day 1 Tr. 177:7–11.

[3] Plaintiffs argue that both of these noninfringement arguments are waived because they were not presented in the Defendants first JMOL. Defendants respond that "CH specifically moved for JMOL of non-infringement citing 'insufficient evidence to establish . . . that Defendants infringe any claim of 'the '140 patent." ECF No. 305 at 9. While the Court is sympathetic to the Plaintiff's arguments here, the Court is not convinced that this amounts to the level of waiver required under Rule 50. *See Navigant*, 508 F.3d at 288.

'somewhat random in their nature.'" *Id.* (citing Day 2 Tr. 239:20–22; Zane DX at 80). For the LT2600 chip, however, measurements did not show "any of those spikes," reflecting a "dramatic difference" in operation. *Id.* (citing Day 2 Tr. 240:7–9; Zane DX at 80). Defendants argue that Plaintiffs do not dispute this evidence and that their "infringement expert testified that the '140 patent's pulses are 'quick changes in voltage,' not in current or impedance, 'that turn on and off a semiconductor switch." Day 1 Tr. 180:25–181:3 (emphasis added); *see id.* at 184:23–24 ("pulse is just a quick voltage on and off").

In response, Plaintiffs contend that their expert "confirmed experimentally that the LT2600 had a pulse generator that generated pulses to control switch CP2." ECF No. 299 at 16 (citing Trial Tr. Day 1 at 180:17–181:3; 180:19–24). Plaintiffs contend that he also "testified that the switch is turned on via the pulse, and also when the light is determined to be properly installed." *Id.* (citing Trial Tr. Day 1 at 188:15–22.) Plaintiffs also contend that the Defendants reliance on the spikes in the data in order to distinguish between the LT2600 and the patented invention comes down to the level of resolution that the was shown. *Id.* Specifically, Plaintiffs contend that Defendants' expert Dr. Zane's "spikes" are just zoomed out views of the pulses that makes it look more random and sporadic. *Id.* However, Plaintiffs argue that their expert showed the Jury these pulses and spikes at different levels of resolution, and the zoomed in view of the graph shows fewer spikes. *See id.* (presenting two graphs of differing levels of resolution).

The Court finds Defendants arguments here to be unconvincing. A reasonable Jury could have found that the LT2600 does not lack a pulse generator or pulses and that the pulses of the patented invention are not different from the LT2600.

In sum, the Court finds that there is substantial evidence to support the Jury's infringement verdict.

### iii. Substantial Evidence Supports the Jury's Finding of Willfulness

A determination of willfulness requires a finding of "deliberate or intentional" infringement. *SRI Int'l, Inc. v. Cisco Sys., Inc.*, 14 F.4th 1323, 1330 (Fed. Cir. 2021). "To state a claim for willful infringement, 'a plaintiff must allege facts plausibly showing that as of the time of the claim's filing, the accused infringer: (1) knew of the patent-in-suit; (2) after acquiring that knowledge, it infringed the patent; and (3) in doing so, it knew, or should have known, that its conduct amounted to infringement of the patent.'" *Parity Networks, LLC v. Cisco Sys., Inc.*, No. 6:19-cv-00207-ADA, 2019 WL 3940952, at *3 (W.D. Tex. July 26, 2019) "Willfulness largely turns on intent, which is an issue reserved to the jury." *See WBIP, LLC v. Kohler Co.*, 829 F.3d 1317, 1341 (Fed. Cir. 2016). The Jury found that Defendant CH willfully infringed all of the asserted patents. ECF No. 230 at 5. Defendants ask the Court to grant a JMOL on willfulness. ECF No. 291 at 17–18.

As a preliminary matter, the Defendants recognize that given that the Court "granted enhanced damages, CH recognizes JMOL on willfulness is unlikely." *Id.* (citing ECF No. 286 at 4–20). Defendants thus throw the kitchen sink at trying to attack Jury's verdict finding that CH willfully infringed the asserted patents in order to "preserve their arguments for appeal." *Id.* According to Defendants, "Plaintiffs based their willfulness case on arguments that CH ignored emails alleging infringement, copied Plaintiffs' products, raised no infringement defenses, never redesigned products, and were advised by a subsequently terminated attorney to avoid and delay merits litigation." *Id.* (citing Day 4 Tr. 43:3–22).

*First*, Defendants argue that Plaintiffs based their willfulness case on arguments that CH ignored emails alleging infringement, but Defendants contend that "[u]nrebutted evidence at trial showed that Ms. Gan rarely paid attention to emails, had never seen the emails from Super

Lighting, and 'would not be able to read them and understand them' because they were in English." *Id.* Plaintiffs respond that "it was certainly reasonable for the jury to reject the myriad inconsistent stories Defendants presented at trial. CH's president, Caiying Gan, variously testified that: (1) she does not check email (despite having an email address prominently displayed on her business card) (Trial Tr. Day 1 at 211:5–11, 214:6–11); (2) she did not receive the emails, (*id.* at 213:13–17, 215:5–25); (3) she received the emails but did not open them, (id. at 214:14–18, 214:19–215:4); (4) she did not read the emails because they were written in English, (*id.* at 213:13–17, 214:14–18); and (5) she does not know how to work her laptop, (*id.* at 216:10–16)." ECF No. 299 at 6. The Court agrees. The Jury was certainly free to find that neither Ms. Gan nor Defendants were credible—this is supported by substantial evidence.

*Second*, Defendants argue that the alleged copying was rejected by this Court. ECF No. 291 at 18 (citing ECF No. 286 at 7). The Plaintiffs do not respond to this, and the Court agrees with the Defendants. However, the allegations of copying that were introduced at trial are insufficient to support a JMOL of no willfulness.

*Third*, Defendants contend that CH never admitted infringement, and that the agreement that led CH to drop non-infringement in part was not admissible under the Federal Rules of Evidence. ECF No. 291 at 18. Plaintiffs respond that CH's admission "was clear, unambiguous, and repeated multiple times." ECF No. 299 at 5. Plaintiffs cite "15 times" that this infringement admission was repeated before the Court. *Id.* The Court agrees with the Plaintiffs and finds that this does not support a JMOL of no willfulness.

*Fourth*, Defendants contend that the Plaintiffs' argument at trial that CH never redesigned products fails for similar reasons. ECF No. 291 at 19. Defendants contend that Defendants believed—and continue to believe—that their invalidity defenses obviate the need

for redesign and that their lack of redesign is not evidence of "malicious" or "bad-faith" conduct. *Id.* The Plaintiffs do not respond to this, and the Court agrees with the Defendants. However, the Court finds that the allegations that the defendants failed to redesign that were introduced at trial are insufficient to support a JMOL of no willfulness.

*Fifth*, Defendants contend that Plaintiffs' arguments about an email from counsel that CH terminated during trial supports a JMOL of no willfulness because it was privileged and lacks probative value. ECF No. 291 at 19. Plaintiffs respond that the Defendants waiver argument "flies in the face of this Court's July 12, 2021 rulings holding that Mr. Jiang and Defendants' counsel waived any privilege over the purported opinions of counsel and ordering documents like PX 326 to be produced." ECF No. 299 at 7 n.5. The Court agrees with Plaintiffs and finds that its rulings finding privilege to be waived do not support a finding of JMOL of no willfulness.

In sum, for similar reasons that this Court found in granting enhancement of damages (ECF No. 281), the Court finds that there is substantial evidence to support the Jury's finding of willful infringement of the asserted patents. The Court does not find the Defendants' arguments to the contrary to be convincing.

In conclusion, the Court having considered all of the arguments in the Defendants' brief and the applicable law, finds that Defendants have not met their burden to grant JMOL on any of their identified grounds. Thus, the Court DENIES their motion for JMOL.

## III. MOTION FOR NEW TRIAL

### A. Legal Standard

The Court has discretion to grant a new trial "based on its appraisal of the fairness of the trial and the reliability of the jury's verdict." *Smith v. Transworld Drilling Co.*, 773 F.2d 610,

612– 13 (5th Cir. 1985). "A new trial will not be granted based on trial error unless, after considering the record as a whole, the court concludes that manifest injustice will result from letting the verdict stand." *Foradori v. Harris*, 523 F.3d 477, 506 (5th Cir. 2008). "To justify a reversal based on improper comments of counsel, the conduct must be such as to gravely impair the calm and dispassionate consideration of the case by the jury." *Dixon v. Int'l Harvester Co.*, 754 F.2d 573, 585 (5th Cir. 1985). The moving party must timely object and show that the conduct went "far beyond the bounds of accepted advocacy before [the] court must grant a new trial." *Geoffrion v. Nationstar Mortg. LLC*, 182 F. Supp. 3d 648, 673 (E.D. Tex. 2016) (citing *Edwards v. Sears, Roebuck & Co.*, 512 F.2d 276, 284 (5th Cir. 1975)); *see also Baisden v. I'm Ready Prods., Inc.*, 693 F.3d 491, 509 (5th Cir. 2012). The burden is on the moving party to show a new trial is warranted. *Sibley v. Lemaire*, 184 F.3d 481, 487 (5th Cir. 1999).

**B. Discussion**

Defendants move for a new trial for three primary reasons. ECF No. 292 at 1. First, Defendants request a new trial in light of the allegedly "erroneous grant of JMOL and evidentiary errors regarding invalidity." *Id.* Second, Defendants request a new trial in light of the alleged "failure of Plaintiffs' damages expert to apportion the value of the asserted patents." *Id.* Third, Defendants request a new trial in light of the other alleged "evidentiary error as well as inflammatory statements by Plaintiffs' counsel." *Id.* As explained below, the Court finds that none of these alleged errors warrant granting Defendants a new trial.

**i. The Court properly granted JMOL on invalidity of the '125 and '540 Patents and excluded evidence**

Defendants move for a new trial based on the Court's grant of partial JMOL for Plaintiffs on invalidity of the '125 and '540 Patents. *Id.* at 2. At trial, CH's expert, Dr. Michael Lebby, testified that claim 1 of the '125 patent and claims 13 and 14 of the '540 patent were invalid in

light of three LED tube lamp products, the Cree LED T84821L40K tube (the "Cree tube"), the MaxLite G Series L18T8DF440-G tube (the "MaxLite tube"), and the Philips InstantFit LED T816.5W/48-3500 tube (the "Philips tube"). ECF No. 238 ("Day 2 Tr.") 282:25–300:3. As part of his opinion, Dr. Lebby explained that the Cree, MaxLite, and Philips tubes were prior art because they were on sale in 2014, before the '125 and '540 patents' February 12, 2015 priority date. Day 2 Tr. 291:10–14. The Court, however, ordered partial JMOL for Plaintiffs on invalidity. It reasoned that Dr. Lebby's testimony that the Cree, MaxLite, and Philips tubes were prior art available in 2014 could not constitute sufficient evidence to send the issue to the Jury because the evidence on which he based his opinion was not "in the record" at trial. ECF No. 239 ("Day 3 Tr.") 76:11–18; *see id.* 48:24–53:9, 73:18–82:1.

Defendants contend that "Rule 703 and precedent make clear that expert testimony is itself evidence; the evidence on which an expert relies need not even be admissible, much less actually admitted." ECF No. 292 at 2. Defendants argue that Dr. Lebby's testimony that the Cree, MaxLite, and Philips tubes were "on sale in 2014," Day 2 Tr. 282:12–23 (Cree), 285:22–24 (MaxLite), 289:18– 25 (Philips), was itself sufficient evidence to support a Jury finding that those products were prior art. *Id.* at 3.

Defendants' argument here—that Dr. Lebby's testimony alone, without personal knowledge, the purported prior art products themselves, or any documents about them—can invalidate a patent flouts law Defendants cite in their concomitant JMOL motion. ECF No. 291 at 3 ("'[C]onclusory, unsupported assertions,' even by an expert, cannot defeat JMOL."). Without the physical tubes, specification sheets, or photographs in evidence, Defendants asked Dr. Lebby whether the tubes were on sale in time to qualify as prior art. Although he agreed, his opinion had no foundation. He admitted he had no personal experience with the tubes. ECF No.

281 at 24. He had not spoken to anyone about them, or heard a witness testify about them. (*See, e.g.*, Trial Tr. Day 2 at 276:10–277:8; 317:13–319:6.) And he could not point to a document in evidence that established they were on sale. *See generally id.* at 271:25–309:15.

Defendants' own JMOL motion explains that "conclusory, unsupported assertions," even by an expert, cannot create issues of fact. ECF No. 291 at 3 (citing *Kampen v. Am. Isuzu Motors, Inc.*, 157 F.3d 306, 318 (5th Cir. 1998) (en banc). This is unsurprising, given that Rule 702(b) dictates opinion testimony must be "based on sufficient facts or data." It is well-settled that there must be substantial evidence in the record for a matter to go to the Jury. *Wechsler v. Macke Int'l Trade Inc.*, 486 F.3d 1286, 1294 (Fed. Cir. 2007) (denying JMOL was error where "expert presented little more than conclusory evidence").

Parties may contest expert testimony at trial and seek JMOL where no reasonable jury could find that the other side carried its burden of proof. Here, Dr. Lebby did so little—he did not take the photographs, direct taking the photographs, know who took the photographs, or follow up on the physical items in the photographs—that no reasonable jury could credit his invalidity theory. Defendants are not entitled to a new trial when they failed to "get critical system art into evidence before [they] closed their case." ECF No. 281 at 12.

Defendants further argue that a new trial is required based on the Court's exclusion of a litany of various invalidity evidence. ECF No. 292 at 6–12. *First*, Defendants contend that the prior art light tubes were erroneously excluded. *Id.* They argue these warrant a new trial based on when the Court granted JMOL on CH's invalidity defenses based on the Cree, MaxLite, and Philips tubes, the Court indicated it would not have done so if CH had admitted into evidence the tubes themselves. *Id.* They argue two reasons why the Court allegedly erred in excluding this evidence. The Defendants first argue that the Court erred in excluding the tubes because the

tubes had in fact been produced. *Id.* They argue that the tubes were produced during discovery and available for inspection by Plaintiffs no later than June 2020. The Court, however, gave Defendants' counsel multiple opportunities to explain why they should be allowed to go the Jury. Trial Tr. Day 2 at 9:13–17:7. Ultimately, the Court ruled that because Dr. Lebby did not physically examine the tubes himself prior to issuing his report, (*Id.* at 14:20–23), because he did not examine them physically prior to his deposition, (*Id.* at 15:3–5), and because the tubes were not physically present at his deposition, (*Id.* at 14:17–19), Dr. Lebby had made "a choice" that he "was prepared to give his report based on only photos and he felt it wasn't necessary to look at the bulbs themselves." *Id.* at 16:6–11. Defendants abandoned using the tubes and blamed prior counsel for relying exclusively on the photographs. *Id.* at 16:12.

Defendants also argue that the tubes should have been admitted because of the "trade inscriptions" on them. ECF No. 292 at 6–12. Yet Defendants failed to make their "trade inscription" argument when the Court was considering these issues on Day 2; they only raised that contention during their Day 3 offer of proof, well after Dr. Lebby had testified. *Id.* (citing Day 3 Tr. at 45:20–22 for trade inscription argument); *see also generally* Trial Tr. Day 2 at 9:13–17:7.) Thus, the "trade inscription" argument was waived.

*Second,* Defendants argue that the Court erroneously excluded the MaxLite documents because the Court excluded them for a lack of a sponsoring witness. *Id.* According to Defendants, CH timely identified two MaxLite witnesses: Umesh Baheti or another "MaxLite Representative." *Id.* In an order entered on October 27, 2021, the Court found the following:

> "Defendants conceded on October 27, 2021, that they failed to provide notice to Plaintiffs during discovery that Mr. Umesh Baheti would be authenticating MaxLite documents. The Court therefore ORDERS that Eric Marsh, Mr. Baheti's belatedly identified replacement, is excluded as a witness."

Defendants argue that disclosing a corporate representative is sufficient to the notice requirements, and that even if it were not proper, a late-disclosed witness should not be excluded if the late disclosure is "substantially justified or is harmless." *Id.* (citing Fed. R. Civ. P. 37(c)(1)). Upon consideration of the parties' arguments, the applicable law, the Court finds Defendants' arguments unpersuasive and not sufficient to warrant a new trial.

*Third*, Defendants complain that the Court erroneously excluded two internal documents relevant to invalidity: (1) DX41 and (2) DX98. First, Defendants argue that DX41 was a presentation from August 2014 showing Super Lighting's in-house teardowns of the Cree and Philips tubes—confirming that those products were publicly available in 2014 and therefore prior art. At trial, the Court acknowledged the presentation "may invalidate the patent," but excluded it as "only dealing with inequitable conduct." Day 1 Tr. 5:15–19, 7:12–16. Defendants now argue that DX41 was relevant to invalidity (apart from inequitable conduct) because it showed that Super possessed the Cree and Philips tubes in August 2014. Second, Defendants argue that DX98 was minutes from a Super Lighting strategy meeting, stating that Super's patent strategy was to "[t]urn[ ] . . . what is typically considered to be unpatentable into patents." ECF No. 292 at 12. Defendants contend that "it was highly relevant: It tended to make it more probable that, in accord with its aggressive patent strategy, Super sought and obtained patents that are in fact 'unpatentable.'" *Id.*

Plaintiffs respond that Defendants attempt to justify DX 41 by glossing over which tubes it addresses. ECF No. 297 at 17. They contend that Dr. Lebby's invalidity opinions involved the Philips T816.5T8/48-3500, the Cree LED T8-48-21L-40K, and the MaxLite Direct Fit Model L18T8DF440-G. *Id.* (citing Trial Tr. Day 2 at 315:24–316:13, 317:13–20.) Yet DX 41 does not mention any of those models. All it shows is that Plaintiffs knew about other tubes from Philips,

Cree, and MaxLite. While that might matter for inequitable conduct, it is irrelevant to invalidity. The content of DTX-41 has not changed, and Defendants make no better showing about it than they did before, so the Court holds that DTX-41 does not merit a new trial.

In regard to DX98, Plaintiffs respond that Defendants' "own motion confirms it was an inequitable conduct document." ECF No. 287 at 17. The Court agrees. As the Court recognized, that is an inequitable conduct theory. Trial Tr. Day 1 at 94:3–15. DTX-98 never mentions the patents-in-suit or any of Defendants' purported prior art. *See generally* DTX-98, ECF No. 296-10. Accordingly, it has nothing to do with invalidity, and its proper exclusion cannot justify a new trial.

ii. **The Court properly found that Plaintiffs' damages evidence was admissible and sufficient**

Defendants next move for a new trial based on the Court's admission of the Plaintiffs' damages evidence. ECF No. 292 at 12. Specifically, Defendants argue that "[t]he testimony of Plaintiffs' damages expert, Ms. Kindler, should have been excluded and was legally insufficient to prove damages regardless." *Id.* Defendants contend that in order for the Plaintiffs to properly apportion their damages, they "had to prove the value of affixing the LED strip to the tube lamp's 'inner circumferential surface'; for '540 patent, the value of disposing diffusion film directly on the tube lamp; and for the '140 patent, the value of its pulse-based shock-protection system." *Id.* at 13. Defendants contend they did not do so.

As a preliminary matter, Plaintiffs contend that Defendants have improperly included these arguments regarding excluding Plaintiffs' damages evidence in their Motion for a New trial because Defendants are in essence renewing their damages JMOL in their Motion for New Trial instead of their renewed JMOL. ECF No. 297 at 18. Plaintiffs contend that Defendants did not move for JMOL under Rule 50(a) on all damages issues; rather, their request was limited only to

Ms. Kindler's royalty calculation based on the Lunera agreement. *Id.* (citing Trial Tr. Day 3 at 101:12–102:1.)

Accordingly, the Court finds that the Defendants forfeited all other damages grounds for JMOL. *See, e.g.*, *i4i Ltd. P'ship v. Microsoft Corp.*, 598 F.3d 831, 845 (Fed. Cir. 2010), *aff'd*, 564 U.S. 91 (2011). To the extent Defendants now object to the admissibility of Ms. Kindler's testimony where they failed to object at trial, a new trial motion is an improper vehicle for their objections. *Navigant Consulting, Inc. v. Wilkinson*, No. 3:02-CV-2186-B, 2006 WL 2422868 (N.D. Tex. Aug. 22, 2006) (citing *Johnson v. Michelin Tire Corp.*, 812 F.2d 200, 210 n.8 (5th Cir. 1987)) (denying new trial motion after failure to object to allegedly inadmissible testimony)).

The Court finds Defendants' arguments here unpersuasive. Defendants essentially re-urge to the Court the very same arguments that they made in their JMOL on excluding Plaintiffs damages evidence based on the Lunera agreement. ECF No. 292 at 12–17. They contend that Ms. Kindler proposed a per-unit royalty of $0.30–$0.45. *Id.* (citing Day 2 Tr. 76:24–77:8). According to Defendants, "[s]he derived that figure from past licenses with (1) Technical Consumer Products ("TCP") . . . and (2) Lunera Lighting." *Id.* Defendants argue that both licenses, however, covered "all" of Super's intellectual property, including over 260 patents. *Id.* Defendants thus contend that "[r]ather than apportion down to the patents here, Ms. Kindler applied the royalty rates for over 260 patents to just three patents—indeed, she inflated those rates." *Id.*

Plaintiffs respond that their "expert Ms. Kindler explained to the Jury how, when considering the Lunera license's impact on the hypothetical negotiation, upward influences like the direct competition between Super Lighting and CH Lighting would counterbalance

downward factors like the wider breadth of the IP rights being granted to Lunera. ECF No. 297 at 19 (citing Trial Tr. Day 2 at 57:23–61:9). Thus, Plaintiffs contend that, "[w]hile Defendants may disagree with Ms. Kindler's conclusion, her methodology is consistent with *Georgia-Pacific*, and the Jury was free to credit her opinions over those of Defendants' expert." *Id.*

Defendants primarily rely on *Apple Inc. v. Wi-LAN Inc.*, 25 F.4th 960, 973–74 (Fed. Cir. 2022), to support its argument that Ms. Kindler's royalty calculation should have been excluded and thus a new trial is warranted. Because Plaintiffs did not initially address this intervening precedential Federal Circuit opinion in their briefing on Defendants' motion for a new trial, the Court asked the parties for supplemental briefing on this point. *See* ECF Nos. 319–21.

In *Wi-LAN*, the Federal Circuit vacated a damages award and ordered a new trial on damages. *See* 25 F.4th at 972–74. To estimate a reasonable royalty in that case, the patentee's expert culled more than 150 Wi-LAN license agreements down to three comparable agreements. *Id.* The patentee's expert then reduced the rate because unlike the three comparable agreements, a hypothetical negotiation would have resulted in a license to only the asserted patents. *Id.* However, the expert also determined that the two asserted patents were the "key patents" in the three licenses. *Id.* The Federal Circuit disagreed with the district court and ordered a new trial on damages. *Id.* The Federal Circuit found that the expert's opinion that the "the asserted patents were key patents is untethered to the facts of this case." *Id.* According to the Federal Circuit, "[m]ost importantly, those licenses treated the asserted patents as chaff, not wheat." *Id.* The Court found significant that the "there is no evidence that the '757 patent was discussed during negotiations for any of the comparable licenses." *Id.* For both of the asserted patents, the Federal Circuit found that none of the comparable licenses treated them as the key patents. *Id.*

Here, Ms. Kindler's testimony was more than sufficiently reliable and does not require a new trial under *Wi-LAN*. *Wi-LAN* represents one paradigm of patent litigation: an assertion entity (Wi-LAN) suing one of the world's largest operating companies (Apple) for a royalty on every unit of its flagship product (the iPhone). Because Wi-LAN's only business is licensing, the two sides' experts had access to at least 150 potential benchmarks for the hypothetical negotiation. 25 F.4th at 971. Not surprisingly, the experts in that case selected very different licenses as "comparable" agreements for their respective damages models. Thus, Wi-LAN was essentially a dispute about which licenses should be considered in the first instance, not how to apply relevant, agreed-upon licenses.

Apple's expert focused on Wi-LAN's licenses with multinational cellphone companies—LG, Kyocera, Motorola—and giant chipmaker Intel, whose businesses, legal sophistication, and market strength are comparable to Apple's. ECF No. 321-2 at 72, 74. All their licenses were structured as lump sums. *Id.* at 72–74. And an internal Wi-LAN business plan admitted it was "finding it challenging to convince companies to pay license amounts…above single digit millions." *Id.* at 72–73. Apple's expert accordingly estimated damages in a range of $5–$10 million. *Id.* at 68–69.

Wi-LAN's expert took a radically different approach. Eschewing Wi-LAN's licenses with large cellphone makers like Apple, he cherry-picked running royalty licenses Wi-LAN had granted to three niche cellphone providers, Unnecto, Vertu, and Doro.1 *Id.* at 73–74. Wi-LAN's expert conceded that those licenses were not comparable. ECF No. 321-2 at 322:3–9. Nevertheless, he relied on them and concluded that the two patents-in-suit were "key patents" responsible for the bulk of their value, with thousands of other patents in various technology

fields included for a "marginal upcharge." 25 F.4th at 972. To account for that, the expert reduced the royalty by 25%. *Id.* at 973.

But the two "adjustments" were as cherry-picked as the licenses. Wi-LAN defended the patents-in-suit as its "crown jewels," *id.* at 972, yet its CEO admitted that negotiations focused on particular patents not because of their inherent value, but because Wi-LAN chose to introduce them into the licensing discussions. ECF No. 321-4 at 30–31. Wi-LAN's expert was thus forced to concede that any subset of patents could be "key." ECF No. 321-2 at 56, 59–60; ECF No. 321-3 at 29–30. Moreover, one of the two patents-in-suit was omitted in two licenses and listed as "Non-Asserted" in the third, while the second patent was omitted in one license and listed as "Non-Asserted" in another. 25 F.4th at 973. Only one patent's inclusion in the Vertu agreement justified Wi-LAN's rate. *Id.*

Wi-LAN's 25% reduction was equally arbitrary. The Federal Circuit assumed the number came from Wi-LAN's CEO, *id*. at 973, but the briefs and testimony below show that the CEO testified such adjustments for additional patents "might" happen "sometimes." ECF No. 321-2 at 62; ECF No. 321-5 at 158:1–10.) No one identified a single license where such a markup occurred. ECF No. 321-2 at 62. Most important, there was no evidence that the Unnecto, Vertu, and Doro licenses had been adjusted in this way. *Id.* at 61–62. Wi-LAN was left with no support for the 25% reduction except its expert's "experience" generally. *Id.* at 59. And, because he admitted he would have applied the reduction to any subset of patents, ECF No. 321-2 at 59–60, ECF No. 321-4 at 30–31, his 25% figure was arbitrary.

This case is completely different. The litigants here are not a massive non-practicing entity and the world's largest electronics manufacturer, but "archrivals" in the LED lightbulb business. As operating companies in a narrow market, they have engaged in limited patent

licensing; there was no ready pile of 150 licenses to "cull through" here. Instead, the licenses available were real-world licenses from the relevant industry. Accordingly, unlike in *Wi-LAN*, the experts here agreed that the licenses Kindler addressed were technologically comparable. *See, e.g.*, Day 2 Tr. at 62:1–9; Day 3 Tr. at 28:13–16. They also agreed on the format of the license, i.e., a per-unit running royalty (Day 2 Tr. at 45:13–46:13, 335:1–18), and on the royalty base (Day 3 Tr. at 25:11–20, 28:10–12).

CH's expert Mooney formulated his running royalty from the same agreements as Kindler. *Compare* Day 3 Tr. at 18:17–25:15, *with* Day 2 Tr. at 53:1–62:7. The Court finds that this resolves any question whether Kindler's reliance on the licenses merits a new trial. *See, e.g.*, *Pavo Sols. LLC v. Kingston Tech. Co.*, 35 F.4th 1367, 1378–80 (Fed. Cir. 2022) (denying JMOL where parties agreed a license was comparable); *Bio-Rad Lab'ys., Inc. v. 10X Genomics Inc.*, 967 F.3d 1353, 1374 (Fed. Cir. 2020) (affirming denial of new trial where district court concluded licenses had "baseline comparability" and remaining "degree of comparability" was for the jury). CH "cannot legitimately challenge the comparability of its own comparable." *Versata Software, Inc. v. SAP Am., Inc.*, 717 F.3d 1255, 1268 (Fed. Cir. 2013).

The parties' experts did disagree on how to apply the licenses they both deemed comparable, and Mooney calculated a per-unit rate while Kindler calculated a dollar amount. Day 2 Tr. at 69:11–23, 335:1–18. But such differences are to be expected because comparable licenses are almost never identical to the hypothetical negotiation. *See, e.g.*, *Ericsson Inc. v. D-Link Sys., Inc.*, 773 F.3d 1201 (Fed. Cir. 2014) ("[T]he fact that a license is not perfectly analogous generally goes to the weight of the evidence, not its admissibility."); *Virnetx, Inc. v. Cisco Sys., Inc.*, 767 F.3d 1308, 1330 (Fed Cir. 2014). "[A]ny reasonable royalty analysis 'necessarily involves an element of approximation and uncertainty.'" *Lucent Techs., Inc. v.*

*Gateway, Inc.*, 580 F.3d 1301, 1325 (Fed. Cir. 2009) (quoting *Unisplay, S.A. v. Am. Elec. Sign Co.*, 69 F.3d 512, 517 (Fed. Cir. 1995)). CH's suggestion that Kindler did "nothing" to adjust the agreed-upon licenses is as wrong now after trial as it was at the Daubert stage. CH wrongly assumes that because Kindler's ultimate estimate was close to the terms of the actual agreements, she must have made no adjustments. But as to the TCP license, Kindler laid out her adjustments over five pages of trial testimony. Day 2 Tr. at 53:1–57:21, 58:20–61:12. All this testimony was presented without objection. Moreover, Ms. Kindler did not apply an arbitrary reduction factor, like Wi-LAN's expert did, but rather accounted for the actual economic relationships between Super Lighting, TCP, and CH.

Ultimately, the Court finds that *Wi-LAN* does not require overturning the Jury's verdict here because of the many fundamental differences between the two cases. The Court also bears in mind that CH is arguing for a new trial, which should be granted only when "prejudicial error has crept into the record or … substantial justice has not been done." *Jordan v. Maxfield & Oberton Holdings, L.L.C.*, 977 F.3d 412, 417 (5th Cir. 2020). Here, Kindler's comparable-license analysis was just one factor in her complete 15-factor Georgia-Pacific analysis. She specifically testified about factors 5, 8, 11, and 13 in addition to factor 1. *See, e.g.*, Day 2 Tr. at 49:13–50:11. *Wi-LAN* has no bearing on the other Georgia-Pacific factors, including factor 5's focus on competition between the parties. The Court finds that it made no prejudicial error, and substantial justice was done. Thus, Defendants' motion for a new trial on damages is DENIED.

iii. **The alleged inflammatory statements do not warrant a new trial**

Defendants next move for a new trial based on this Court's alleged evidentiary errors and alleged inflammatory argument. The Court rejects each of these arguments in turn.

*First*, Defendants argue that the Court should have not admitted an email between CH and its prior counsel because it was privileged. ECF No. 292 at 17. Defendants contend that it was erroneous for the Court to find that Jack Jiang "opened the door" to admission of privileged communications by testifying that it took CH many months to find counsel. *Id.* (citing Day 2 Tr. 147:7–151:15). Defendants further contend that Plaintiff's Counsel relied on the admission of this email to make "inflammatory representations about CH's litigation conduct" that was "deeply prejudicial and require a new trial." *Id.* at 19. Specifically, Defendants contend that they were prejudiced by counsel's repeated assertion that CH was "looking to avoid and delay the lawsuit because they didn't want to respond on the merits," "because they have no legitimate defenses." *Id.* at 18 (citing Day 4 Tr. 35:9–14). Defendants further contend that the Plaintiffs improperly "inflamed" the Jury by reiterating Defendants' concession of infringement. ECF No. 292 at 18–19.

In response, Plaintiffs first argue that nothing about its trial presentation was inflammatory. ECF No. 297 at 3. Plaintiffs demonstrate how the jury instructions told the jury that Defendants had stipulated to infringement. *See id.* According to the Plaintiffs, "[i]f there was no 'admission,' as Defendants now claim, why did they not object to these jury instructions?" *Id.* at 4. Plaintiffs also contend that the Defendants failed to object all the other times the infringement admission was raised, and therefore, "Defendants agreed to this as a factual matter." *Id.* As for the so-called delay and avoid email, Plaintiffs assert that "any privilege attached to the DELAY and AVOID email was vitiated months earlier through Mr. Jiang's and counsel's own behavior." *Id.* at 5. Specifically, Plaintiffs explained that after Mr. Jiang brought up the communications during a deposition, Plaintiffs sought to compel and asked for a finding of waiver—and the Court agreed. *Id.* at 6. The Court ruled that the communications from counsel

"now ha[ve] become information that could be used to impeach Mr. Jiang." *Id.* at 6. At trial, Plaintiffs argue that "[g]iven [a] pattern of inconsistent testimony and the direct falsehoods Mr. Jiang provided the jury, Plaintiffs had no choice but to impeach him with PTX-326. That document shows that Mr. Jiang did know of the lawsuit in January 2020, he had retained counsel at that point, and Defendants were pursuing a strategy of delaying or avoiding the lawsuit." *Id.* at 7. Plaintiffs conclude by arguing that "PTX-326 hardly had the outsized impact that Defendants suggest." *Id.* at 8. According to Plaintiffs, "Defendants cannot show that this single document tipped the balance of the verdict." *Id.*

In reply, Defendants first contend that "CH did not 'waive' privilege by producing the document pursuant to a court order." ECF No. 306 at 9. Defendants further contend that privilege was not waived by Mr. Jiang's deposition testimony about opinions of counsel on "infringement and invalidity." *Id.* Defendants argue that the Court rejected the Plaintiffs' claim that the "email contradicts Mr. Jiang's testimony," declaring it not to be "evidence that CH had a strategy of avoiding litigating this Action in Texas." *Id.* (quoting ECF No. 286 at 28–29). Defendants argue that "even if the email were relevant to show when CH retained counsel, that was not grounds to admit the email's substance." *Id.* Defendants argue that the Plaintiffs used the email to inflame the Jury throughout the trial and raised the email with CH's invalidity and damages expert. *Id.* at 9–10.

The Court finds that the Defendants' alleged evidentiary errors regarding the delay and avoid email and corresponding alleged inflammatory argument are unpersuasive and do not warrant a new trial. The Court finds that it properly admitted the delay and avoid email. Any privilege regarding the email was waived. Moreover, the Plaintiffs' use of the email at trial did not inflame the Jury. The Court finds that this one document, regardless of its admissibility, was

not enough to sway the verdict in this case. Accordingly, the Court rejects granting a new trial based on this email alone.

The Court further finds that Plaintiffs' arguments regarding Defendants' concession of infringement are not prejudicial and do not require a new trial. It is clear from the record that Defendants conceded infringement and the Defendants failed to object to such a concession. Clear and express, that admission was a stipulated fact that Plaintiffs had every right to cite, and the Jury had every right to rely upon. Nothing about Plaintiffs' behavior was improper or inflaming.

*Second*, Defendants argue that the Court's exclusion of Super Lighting's analysis (DX41) warrants a new trial because it "was admissible on willfulness as well as invalidity" and "[i]ts exclusion unfairly prejudiced CH by giving the jury a one-sided view." ECF No. 292 at 19. According to Defendants, Plaintiffs had introduced CH's internal analysis of Plaintiffs' products as supposed evidence of willful copying. *Id* (citing Day 4 Tr. 32:15–19). To rebut that claim, CH sought to introduce Plaintiffs' analysis of other competitors' products to show it was "common practice" in the industry "to review competitor products." *Id.*

The Court finds, as it did above, that DX41 was properly excluded. Any purported relevance that DX41 has on willfulness is insufficient to warrant a new trial.

*Third*, Defendants assert that the Court's exclusion of the Lumixess documents warrants a new trial. *Id.* According to Defendants, "[t]hose documents show that CH was not willful because it relied on Lumixess to analyze whether the LT2600 chip practiced the Super Lighting's shock-protection system, and thus lacked the "specific intent to infringe" required for willfulness." *Id.* Defendants contend that the Court erred by excluding the documents as hearsay because "CH did not offer the Lumixess documents for their truth (i.e., to show the LT2600 chip

did not infringe), but for the non-hearsay purpose of showing the state of mind they induced—i.e., CH's knowledge of and reliance on Lumixess's analysis." *Id.*

In response, Plaintiffs argue that the Court properly excluded these documents because of Defendants' own procedural errors. ECF No. 297 at 15–16. According to Plaintiffs, Defendants ignored this Court's rule that documentary exhibits require a sponsoring witness. Rather than taking a timely deposition testimony or obtaining a custodial affidavit, Defendants did nothing to meet the sponsoring witness requirement until pressed by the Court at the motion in limine hearing. In reply, Defendants again reiterate that a new trial is warranted because the Court allegedly erred by excluding the Lumixess documents because it was admissible for a non-hearsay purpose. ECF No. 306 at 10.

The Court agrees with Plaintiffs and find that the Court's exclusion of the Lumixess documents does not warrant a new trial. The documents could not be admitted without a sponsoring witness, irrespective of hearsay. Fed. R. Civ. P. 901. When pressed at the motion in limine hearing, Defendants attempted to explain why the Lumixess documents were not hearsay without addressing Rule 901. ECF No. 190 at 5:20–8:5. Mr. Jiang, through whom Defendants hoped to introduce the documents, had no personal knowledge and was thus unqualified to authenticate them. *Id.* at 6:4–7:2. Defendants' motion merely repeats their failed hearsay arguments and continues to ignore authentication. Defendants have once again failed to address the shortcoming of the Lumixess documents, and no new trial is warranted on the basis of their exclusion.

## IV. MOTION FOR SUPPLEMENTAL DAMAGES, ONGOING ROYALTY, AND ENHANCEMENT OF POST-VERDICT DAMAGES

### A. Legal Standard

#### i. Supplemental Damages

Under 35 U.S.C. §284, upon a finding of infringement, a prevailing "patentee is entitled to damages for the entire period of infringement and should therefore be awarded supplemental damages for any periods of infringement not covered by the jury verdict*." ActiveVideo Networks, Inc. v. Verizon Commc'ns, Inc.*, No. 2:10CV248, 2011 WL 4899922, at *2, *4 (E.D. Va. Oct. 14, 2011) (citing *TiVo, Inc. v. Echostar Commc'ns Corp.*, 2006 U.S. Dist. LEXIS at *6 (E.D. Tex. Aug. 17, 2006)). "[S]upplemental damages are compensatory in nature" and "calculated in accordance with the damages awarded in the jury verdict." *Id.* at *2 (citations omitted). The Court has "discretion to award damages for periods of infringement not considered by the jury." *Whitserve, LLC v. Computer Packages, Inc.*, 694 F.3d 10, 38 (Fed. Cir. 2012).

#### ii. Ongoing Royalty

It is within the Court's equitable discretion to determine whether an ongoing royalty need be imposed. *See Paice LLC v. Toyota Motor Corp.*, 504 F.3d 1293, 1314–15 (Fed. Cir. 2007). Although an ongoing royalty is not automatic, "the Federal Circuit has indicated that a prevailing patentee should receive compensation for any continuing infringement." *Apple, Inc. v. Samsung Elecs. Co.*, No. 12-CV-00630-LHK, 2014 WL 6687122, at *7 (N.D. Cal. Nov. 25, 2014) (citing *Telcordia Techs., Inc. v. Cisco Sys., Inc.*, 612 F.3d 1365, 1379 (Fed. Cir. 2010)).

In determining the ongoing royalty rate, the Court must consider: (i) the "change in the parties' bargaining positions, and the resulting change in economic circumstances, resulting from the determination of liability,"; (ii) "changed economic circumstances, such as changes related to the market for the patented products,"; and (iii) any other "post-verdict factor" that would impact

"what a hypothetical negotiation would look like after the prior infringement verdict." *XY, LLC v. Trans Ova Genetics, L.C.*, 890 F.3d 1282, 1297 (Fed. Cir. 2018). "Generally, the jury's damages award is a starting point for evaluating ongoing royalties." *Apple, Inc.*, 2014 WL 6687122, at *14 (citing *Bard Peripheral Vascular, Inc. v. W.L. Gore & Assocs., Inc.*, 670 F.3d 1171, 1193 (Fed. Cir. 2012), *vacated on other grounds*, 467 F. App'x 747. In addition, the Court may consider the Georgia-Pacific factors. *Arctic Cat Inc. v. Bombardier Recreational Prods. Inc.*, 876 F.3d 1350, 1370 (Fed. Cir. 2017).

**iii. Enhanced Damages**

Section 284 of Title 35 provides that, in a patent infringement case, "the court may increase the damages up to three times the amount found or assessed." 35 U.S.C. § 284. As the Supreme Court has remarked in the seminal *Halo* decision, "That language contains no explicit limit or condition, and we have emphasized that the word 'may' clearly connotes discretion." *Halo Elecs., Inc. v. Pulse Elecs., Inc.*, 579 U.S. 93, 103 (2016) (cleaned up). That discretion is not boundless and instead must be exercised "in light of considerations underlying the grant of that discretion." *Id.* (cleaned up). In interpreting those considerations, the Supreme Court appealed to the judiciary's 180-year history of awarding enhanced damages, in which courts have "generally reserved" enhancement for "egregious cases of culpable behavior." *Id*. at 104. Egregious cases typically involve, in the Court's opinion, conduct that is "willful, wanton, malicious, bad-faith, deliberate, consciously wrongful, flagrant, or—indeed—characteristic of a pirate." *Id.* at 103–04; *id.* at 107 ("[S]uch punishment should generally be reserved for egregious cases typified by willful misconduct.").

"Willfulness largely turns on intent, which is an issue reserved to the jury." *See WBIP, LLC v. Kohler Co.*, 829 F.3d 1317, 1341 (Fed. Cir. 2016). Once the jury finds that the

defendant's infringement was willful, the Court must consider whether that alone justifies enhancement. According to the Federal Circuit, "Halo emphasized that subjective willfulness alone . . . can support an award of enhanced damages." *WesternGeco L.L.C. v. ION Geophysical Corp.*, 837 F.3d 1358, 1362 (Fed. Cir. 2016), *rev'd on other grounds*, 138 S. Ct. 2129, 201 L. Ed. 2d 584 (2018); *Halo*, 579 U.S. at 105 ("The subjective willfulness of a patent infringer, intentional or knowing, may warrant enhanced damages, without regard to whether his infringement was objectively reckless."). Yet courts are vested with discretion to forbear enhancement under § 284 even in egregious cases, if that is what "the particular circumstances of" the case demand. *Id.* at 106; cf. *id.* at 111 (Breyer, J., dissenting) ("[W]hile the Court explains that 'intentional or knowing' infringement 'may' warrant a punitive sanction, the word it uses is may, not must . . . . It is 'circumstanc[e]' that transforms simple knowledge into such egregious behavior, and that makes all the difference."). The Federal Circuit has endorsed consideration of the *Read* factors to "assist the trial court in evaluating the degree of the infringer's culpability and in determining whether to exercise its discretion to award enhanced damages at all, and if so, by how much the damages should be increased." *WCM Indus., Inc. v. IPS Corp.*, 721 F. App'x 959, 972 (Fed. Cir. 2018). As to burdens, the "party seeking enhanced damages under § 284 bears the burden of proof by a preponderance of the evidence." *WBIP*, 829 F.3d at 1339.

**B. Discussion**

Now that judgment has been entered, Super Lighting asks the Court to impose each of the following remedies:

- $0.45 per unit for each of the Undisclosed Pretrial Sales, a total of $531,559.80.

- $0.45 per unit for each of the sales representing the Supplemental Damages, a total of $3,872,688.30.
- Prejudgment interest of $18,774.39 on these amounts.
- An ongoing royalty of $0.45 per unit for all infringing products and products not colorably different sold after the entry of judgment
- An additional $0.45 per unit of enhancement on each of the Supplemental Damages sales and Ongoing Sales.

ECF No. 287 at 2. Since its original Motion was filed, Plaintiff filed a notice with the Court updating the above amounts as listed below.

- Additional supplemental damages of $442,771 from CH Lighting since the last sales update, totaling $4,274,812 (on 9,499,583 total infringing sales) since the Jury verdict.
- Additional supplemental damages of $5,781 from Elliott since the last sales update, totaling $44,949 (on 87,039 total infringing sales) since the Jury verdict.
- Additional enhanced damages of $441,292 from CH Lighting since the last sales update, totaling $4,274,812 since the Jury verdict.
- Post-judgment interest of $777 per day for CH Lighting and $4.51 per day for Elliott.

ECF No. 317 at 1–2.

The Court will address each of these requested remedies below.

**i. Undisclosed Pretrial Sales**

Super Lighting argues that Defendants should not be spared from paying damages for its 1.2 million units of undisclosed pretrial sales. ECF No. 287 at 10. According to Super Lighting,

the only reason those sales were not presented to the Jury is because Defendants did not produce them. *Id.* To be clear, Super Lighting is not saying this withholding of unit numbers was nefarious; the parties agreed to a pretrial financial update as presenting real-time information during trial would have been impractical and burdensome. *Id.* But Super Lighting argues that is exactly why the parties expressly agreed in the Joint Pretrial Order that "the amount adequate to compensate Plaintiffs for… past and ongoing infringement" was still at issue. *Id.* (citing ECF No. 173 at 11). Nor did Defendants object to the verdict form, which explicitly asked the Jury to decide only the amount of damages that Super Lighting had proven for Defendants' "past infringement." *See id.* (citing ECF No. 230 at 4). Super Lighting contends that Defendants cannot now backtrack on its agreements to obtain a windfall, particularly one that would result only because Defendants' data was withheld from Super Lighting and the Jury. *Id.*

In response, Defendants argue that despite receiving CH's sales data months before judgment entered—and mere days after they asked—Plaintiffs never moved for supplemental damages or an ongoing royalty. ECF No. 300 at 9. According to Defendants, although Plaintiffs filed extensive motions seeking entry of a judgment awarding many kinds of relief (ECF Nos. 233, 234, 241, 242), they never asked to be awarded those pretrial sales they now demand before judgment. *Id.* Thus, Defendants argue that Plaintiffs ignore Rule 59(e)'s limits because this evidence of "Undisclosed Pretrial Sales" is not newly discovered. *Id.*

In reply, Super Lighting asserts that its motion was timely. ECF No. 303 at 4. Even if its motion were solely based on Rule 59(e), Super Lighting argues that Rule says such motions must be brought within 28 days of a judgment: the exact same timing as a new trial motion under Rule 59(b). *Id.* Judgment here was entered on July 29; 28 days after July 29 was August 26. As such, Super Lighting contends that its August 19 motion was inside the 28-day window. *Id.* According

to Super Lighting, despite all of Defendants' arguments about the time that passed between the verdict and entry of judgment, ECF No. 300 at 11, "during that period Plaintiffs made absolutely no secret that they were pursuing supplemental and ongoing damages." *Id.* Thus, Super Lighting contends that there was no waiver.

Courts have routinely awarded damages in circumstances such as these, and there is no good reason to proceed otherwise here. *See, e.g., Genband US LLC v. Metaswitch Networks Corp.*, No. 2:14-CV-00033-JRG, 2018 WL 11357619, at *10–14 (E.D. Tex. Mar. 22, 2018); *PCT Int'l Inc. v. Holland Elecs. LLC*, 2016 WL 1241875, at *18–19 (D. Ariz. 2016); *ActiveVideo Networks, Inc. v. Verizon Commc'ns, Inc.*, No. 2:10CV248, 2011 WL 4899922, at *4–5 (E.D. Va. Oct. 14, 2011); *Hynix Semiconductor Inc. v. Rambus Inc.*, 609 F. Supp. 2d 951, 960–61 (N.D. Cal. 2009); *Mondis Tech. Ltd. v. Chimei InnoLux Corp.*, 822 F. Supp. 2d 639, 642 (E.D. Tex. 2011) ("[w]hen the jury awarded damages in this case, it did not have before it the sales data for the first and second quarter of 2011… [plaintiff] is entitled to supplemental damages for those two quarters"), *aff'd sub nom.*, *Mondis Tech. Ltd. v. Innolux Corp.*, 530 F. App'x 959 (Fed. Cir. 2013).

The Court agrees with Super Lighting that it should be awarded for the 1.2 million units of undisclosed pretrial sales. Because the Court has "discretion to award damages for periods of infringement not considered by the jury," *Whitserve*, 694 F.3d at 38, the 1.2 million units sold between CH Lighting's final pretrial production of sales data and the November 4, 2021 verdict yields $523,871 in damages at the Jury-approved $0.45 royalty rate. Likewise, the 17,086 units sold between Elliott's final pretrial production of sales data and the November 4, 2021 verdict yields $7,688.70in damages at the Jury-approved $0.45 royalty rate. Accordingly, the Court finds that such an amount should be added to the existing Judgment under the Court's inherent

accounting authority and Rule 59(e). Similarly, the Court is also persuaded that Super Lighting's motion was timely and there was no waiver by Super Lighting.

**ii. Supplemental Damages**

Super Lighting next moves to include supplemental damages on the 8.6 million units Defendants sold after the Jury's willful infringement verdict but before the Court entered judgment.[4] ECF No. 287 at 12–13. Like the above finding that Super Lighting should be awarded supplemental damages on the Undisclosed Pretrial Sales, the Court finds that Super Lighting is also entitled to damages on the units Defendants sold after the Jury's willful infringement verdict but before the Court entered judgment. As it did above, the Court rejects the Defendants' arguments here against awarding these supplemental damages to Super Lighting for similar reasoning.

The Court finds that supplemental damages are necessary and appropriate here to fully compensate Super Lighting for Defendants' infringement. Accordingly, the Court finds that Defendants must pay the $4,319,761 in supplemental damages ($4,274,812 from CH Lighting and $44,949 from Elliott) by adding that amount to the existing judgment under the Court's inherent accounting authority. Similarly, the Court is also persuaded that Super Lighting's motion was timely and there was no waiver by Super Lighting.

**iii. Pre-Judgment Interest**

[4] On December 2, 2022, Super Lighting provided an update on the sales amount requested for their motion for supplemental damages. ECF No. 317. In it, Super Lighting notes that Defendants have since provided updated sales data for the third quarter of 2022, indicating that CH Lighting sold 994,328 additional units of infringing products, earning $3,346,998 in revenue, while Elliott sold 16,132 units of infringing products. *Id.* at 1. Based on Defendants' latest sales figures, there have been additional supplemental damages of $442,771 from CH Lighting since the last sales update, totaling $4,274,812 (on 9,499,583 total infringing sales) since the Jury verdict, and additional supplemental damages of $5,781 from Elliott since the last sales update, totaling $44,949 (on 87,039 total infringing sales) since the Jury verdict.

A prevailing plaintiff in a patent infringement action is entitled to compensation that is "in no event less than a reasonable royalty for the use made of the invention by the infringer, together with interest and costs as fixed by the court." 35 U.S.C. § 284. Therefore "complete compensation" for the defendant's infringement includes prejudgment interest awarded from the date of infringement to the date of judgment. *Gen. Motors Corp. v. Devex Corp.*, 461 U.S. 648, 655 (1983); *Nickson Indus., Inc. v. Rol Mfg. Co.*, 847 F.2d 795, 800 (Fed. Cir. 1988). As this Court has recognized, "[t]he purpose of prejudgment interest is to place the patentee in as good a position as he would have been had the infringer paid a reasonable royalty rather than infringe." *VLSI Tech. LLC v. Intel Corp.*, No. 6:21-CV-57-ADA, 2022 WL 1477728, at *1 (W.D. Tex. May 10, 2022) (quoting *SSL Servs., LLC v. Citrix Sys., Inc.*, 769 F.3d 1073, 1094 (Fed. Cir. 2014) (internal quotation marks omitted)). "Accordingly, prejudgment interest on a damages award "is the rule, not the exception." *Id.* (quoting *Energy Transp. Grp., Inc. v. William Demant Holding A/S*, 697 F.3d 1342, 1358 (Fed. Cir. 2012) (internal quotation marks omitted)).

Super Lighting contends that it should also be awarded prejudgment interest on the Undisclosed Pretrial Sales and Supplemental Damages awarded by the Court. ECF No. 287 at 19. The Court agrees. The Court's Order previously resolved several disputes between the parties concerning the application of prejudgment and post-judgment interest to the damages award, including the applicable interest rates and what portions of the damages award accrue interest. ECF No. 286 at 39–40. As those issues have been resolved, the Court will apply the same treatment of these issues to the amended judgment and to the supplemental damages awarded above.

**iv. Post-Judgment Interest**

Pursuant to 28 U.S.C. §1961, post-judgment "[i]interest shall be allowed on any money judgment in a civil case recovered in a district court." 28 U.S.C. §1961(a). The interest is calculated at the Federal statutory rate of the weekly average 1-year constant maturity Treasury yield, computed daily and compounded annually. *Id*. § 1961(a)–(b); *VLSI*, 2022 WL 1477728, at *4 (holding prevailing patentee "is entitled to an award of post-judgment interest at the federal statutory rate"). Post-judgment interest on a money judgment begins to accrue "from the date of the Court's final judgment until the date of payment." *VLSI*, 2022 WL 1477728, at *4.

Super Lighting contends that it should also be awarded post-judgment interest on the Undisclosed Pretrial Sales and Supplemental Damages awarded by the Court. ECF No. 287 at 19. The Court agrees. The Court's Order previously resolved several disputes between the parties concerning the application of prejudgment and post-judgment interest to the damages award, including the applicable interest rates and what portions of the damages award accrue interest. ECF No. 286 at 39–40. As those issues have been resolved, the Court will apply the same treatment of these issues to the amended judgment and to the supplemental damages awarded above.

**v. Ongoing Royalty**

Super Lighting moves for the Court to award ongoing royalties for the Defendants' continuing infringement post-judgment. ECF No. 287 at 14. Defendants respond that Super Lighting has not justified an ongoing royalty because such royalties must be "'based on a post-judgment hypothetical negotiation using the *Georgia-Pacific* factors'" and "it allegedly failed to "consider 'additional evidence of changes in the parties' bargaining positions and other economic circumstances that may be of value.'" ECF No. 300 at 14–15 (citing *ActiveVideo Networks, Inc. v. Verizon Commc'ns, Inc.*, 694 F.3d 1312, 1343 (Fed. Cir. 2012). According to

Defendants, Ms. Kindler's declaration offers no opinion on a hypothetical post-judgment negotiation, and she mechanically applies "a royalty rate of $0.45, consistent with the jury's verdict." *Id.*

Super Lighting replies that Defendants' arguments are unfounded because no authority requires that Plaintiffs get nothing because they did not present a new Georgia-Pacific analysis on the ongoing royalty. ECF No. 303 at 7. Super Lighting also contends that to the extent any "change[] in the parties' bargaining positions and other economic circumstances" is relevant here, those factors favor Plaintiffs and an increased rate now that willful infringement, validity, and infringement have been conclusively determined. *Id.* at 8 (citing *XY, LLC v. Trans Ova Genetics*, 890 F.3d 1282, 1298 (Fed. Cir. 2018) (reversing district court for lowering the jury-awarded royalty rate without justification); *Amado v. Microsoft Corp.*, 517 F.3d 1353, 1361–62 (Fed. Cir. 2008)).

The Court finds that, consistent with the Jury's verdict in this case, Super Lighting is entitled to an award of an ongoing royalty for post-judgment infringement in the amount of $0.45 per unit. Defendants' only evidence that the rate determined by the Jury and by Ms. Kindler should be adjusted downward is Ms. Kindler's evidence about falling LED prices. ECF No. 300 at 15–17. Yet Ms. Kindler testified that decline was due to Defendants' infringement. ECF No. 238, Trial Tr. Day 2 at 55:18–56:13. Nevertheless, any "change[] in the parties' bargaining positions and other economic circumstances" is relevant here, those factors favor Super Lighting and an increased rate now that willful infringement, validity, and infringement have been conclusively determined. *See XY, LLC v. Trans Ova Genetics*, 890 F.3d 1282, 1298 (Fed. Cir. 2018). Although Defendants also complain that Super Lighting's motion for ongoing royalty was untimely and waived, the Court finds—like it did above—that Super Lighting's motion was not

untimely and not waived. Thus, the Court awards Super Lighting an ongoing royalty for post-judgment infringement in the amount of $0.45 per unit.

**vi. Enhanced Damages**

Super Lighting finally moves to be awarded enhanced damages for CH Lighting's continued willful infringement after the Jury verdict. ECF No. 287 at 16. According to Super Lighting, the Court's ability to enhance damages under 35 U.S.C. § 284 applies with equal force "[i]n either event" whether the damages are found by the jury or assessed by the Court, and therefore the Court may enhance post-verdict supplemental damages and ongoing royalties. *See SynQor*, 709 F.3d at 1385

CH Lighting responds that "[e]ven if the Court were to award supplemental damages, it should not enhance those damages." ECF No. 300 at 19. CH Lighting contends that because the "Court previously declined to enhance parts of the damages award, based on its determination that 'Defendants developed a good-faith belief that they were not infringing by the time they filed an answer to Plaintiffs' complaint,'" the supplemental damages should not be enhanced because CH Lighting continues to believe in good faith that the Asserted Patents are invalid.

Here, the Jury has already found that CH Lighting's infringement was willful, and the Court has already found that this case is egregious and that enhancement is warranted. For example, the Court previously recognized CH Lighting's disregard of the risk from Super Lighting's patent portfolio (ECF No. 286 at 8–10), the Jury's "quick and lopsided decision" (*id.* at 15), the duration of CH Lighting's misconduct (*id.* at 16), the lack of remedial actions (*id.* at 16–17), CH Lighting's motivation to harm Super Lighting including its decision to "poach" Jack Jiang with "unusually large benefits" as well as its "reckless disregard" for the harm to Super Lighting (*id.* at 17–18), and its misrepresentation of the Court's orders and withholding of

information relevant to willfulness during litigation (*id.* at 18–19). These reasons for enhancement continue to apply to CH Lighting's post-verdict infringement with at least the same force.

None of the *Read* factors have changed in a way that weighs against enhancement, and several factors now weigh even more heavily in favor of enhancement. 970 F.2d 816, 826–27 (Fed. Cir. 1992); ECF No. 286 at 6. Regarding *Read* factors 2 (good-faith belief regarding defenses) and 5 (closeness of the case), the Court finds that CH Lighting can no longer maintain a good-faith belief that it either does not infringe or that the patents are invalid, after CH Lighting either withdrew such defenses or the Jury quickly rejected them. *Read* factor 6 (duration of misconduct), now weighs more heavily in favor of enhancement since CH Lighting has continued to infringe for another nine months and counting after the Jury found it to willfully infringe. Continuing to infringe even after the Court admonished CH Lighting for its "egregious" conduct in its Order weighs even more heavily in favor of enhancement. *Read* factor 7 (remedial actions) weighs more heavily in favor of enhancement now that CH Lighting has shown that it has no intention to take any remedial action whatsoever for its continued infringement and the harm caused to Super Lighting. As to *Read* factor 8 (Defendant's motivation), the Court has previously noted the tight competition between Super Lighting and CH Lighting in a small market and that CH Lighting's continued infringement shows at least "reckless disregard for the harm it has and continues to cause to a rival." ECF No. 286 at 18. CH Lighting's continued sales of infringing products illustrate that its motivation to take and maintain its market share at Super Lighting's expense outweighed any concern about Super Lighting's patent rights, the Jury's verdict, and this Court's orders. While CH Lighting's ongoing decision to keep infringing post-verdict and even after the Court's enhancement order could support an increase in enhancement,

the Court finds that applying the Court's previously decided doubling of damages to post-verdict sales (including ongoing royalties) is entirely fair and reasonable. Indeed, because the evidence at trial shows that CH Lighting makes a profit of $1.08 per unit on the infringing tubes (ECF No. 238 at 70:17–71:2), doubling the Jury's $0.45 award to $0.90 per unit would still allow CH Lighting to turn a profit, even for sales made in the face of admitted infringement, a Jury verdict, and enhancement by this Court. Accordingly, the Court grants Super Lighting's Motion to enhance damages on CH Lighting's post-verdict sales by the same factor of two that the Court found in its previous Order (ECF No. 286). The Court, however, declines Super Lighting's invitation to enhance ongoing royalties.

## V. CONCLUSION

It is therefore **ORDERED** that

- Defendants' Motion for Judgment as a Matter of Law, ECF No. 291, is **DENIED**;
- Defendants' Motion for New Trial, ECF No. 292, is **DENIED**;
- Plaintiffs' Motion for Supplemental Damages, Ongoing Royalty and Enhancement of Post-Verdict Damage, ECF No. 287, is **GRANTED-IN-PART**.
- The Court's previous **ORDER** (ECF No. 322) is hereby **VACATED** and **SUPERSEDED**

It is **FURTHER ORDERED** that entry of final judgment is **HELD IN ABEYANCE** pending the parties' resolution of the precise dollar amount of enhancement and supplemental damages the Court has ordered. The parties are hereby instructed to do the following: meet and confer regarding the dollar amount of enhancement and supplemental damages the Court ordered above; and jointly draft a proposed order of final judgment consistent with the rulings above, to be sent to the Court by March 15, 2023, on which date the Court will enter final judgment.

SIGNED this 8th day of March, 2023.

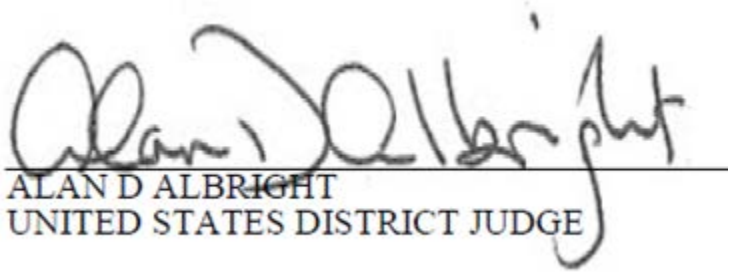

ALAN D ALBRIGHT
UNITED STATES DISTRICT JUDGE