UNITED STATES PATENT AND TRADEMARK OFFICE

BEFORE THE PATENT TRIAL AND APPEAL BOARD

CURRENT LIGHTING SOLUTIONS, LLC d/b/a GE CURRENT, PETITIONER,

v.

JIAXING SUPER LIGHTING ELEC. APPLIANCE CO., LTD., PATENT OWNER.

***INTER PARTES* REVIEW NO. IPR2023-00676**
PATENT NO. 9,939,140

CORRECTED DECLARATION OF MICHAEL LEBBY, Ph.D.

TABLE OF CONTENTS

I. INTRODUCTION 1
II. PROFESSIONAL BACKGROUND 1
III. COMPENSATION 4
IV. OVERVIEW OF TASK & BASIS FOR OPINIONS 5
V. LEVEL OF SKILL IN THE RELEVANT ART 6
VI. OVERVIEW OF THE TECHNICAL FIELD 7
VII. '140 PATENT 9
A. Overview 9
B. Claim Construction 15
1. "means for generating" 15
2. "means for detecting" 16
3. "detection result latching circuit" 17
VIII. COMPARISON OF PRIOR ART TO THE '140 PATENT'S CHALLENGED CLAIMS 18
A. Ground 1: Ivey813 and Ivey345, and Claims 1, 3-4, 21-28, 30-31, and 35 18
1. Ivey813 18
2. Ivey345 20
3. Rationale to Combine Ivey813 and Ivey345 25
4. The Resulting "Ivey Combination" 27
5. Element-by-Element Analysis 27
B. Ground 2: Ivey813, Ivey345, and Sadwick, and Claims 1, 3-4, 21-28, 30-31, and 35 55
1. Sadwick 55
2. Rationale to Combine the Ivey Combination with Sadwick 58
3. The Resulting "Ivey-Sadwick Combination" 65
4. Element-by-Element Analysis 68
C. Grounds 3-4: Ivey813, Ivey345, and Powell—and Optionally Sadwick—and Claims 1, 4-5, and 32 85
1. Powell 85

2. Rationale to Combine the Ivey and Ivey-Sadwick Combinations with Powell 88

3. The Resulting "Ivey-Powell" and "Ivey-Sadwick-Powell Combinations" 89

4. Element-by-Element Analysis 90

IX. CONCLUSION 97

LIST OF REFERENCES CONSIDERED

Exhibit	Shorthand	Description
EX1001	’140 Patent	U.S. Patent No. 9,939,140
EX1003	’140 FH	Excerpts from File History of the ’140 Patent
EX1007	Ivey813	U.S. Patent No. 8,596,813
EX1008	Ivey345	U.S. Patent App. Pub. No. 2014/0015345
EX1009	Sadwick	U.S. Patent App. Pub. No. 2017/0311396
EX1010	Powell	U.S. Patent No. 9,438,165
EX1011	Digi-Key	Wayback Machine capture of *Product Index > Discrete Semiconductor Products > FETs – Arrays*, Digi-Key (Apr. 10, 2014, 11:03 AM), http://www.digikey.com/product-search/en/discrete-semiconductor-products/fets-arrays/1377094 [https://web.archive.org/web/20140410110347/http://www.digikey.com/product-search/en/discrete-semiconductor-products/fets-arrays/1377094]
EX1012	Fairchild	Wayback Machine capture of *FDG6303N Dual N-Channel, Digital FET*, Fairchild Semiconductor (Mar. 8, 2014, 4:25 AM), http://www.fairchildsemi.com/ds/FD/FDG6303N.pdf [https://web.archive.org/web/20140308042522/http://www.fairchildsemi.com/ds/FD/FDG6303N.pdf]
EX1013	Premier	Wayback Machine capture of *Should You Replace Your T8 Fluorescent Lamps with T8 LED Tubes? (updated)*, Premier Lighting (June 27, 2014, 9:59 PM), http://www.premierltg.com/should-you-replace-your-t8-fluorescent-lamps-with-t8-led-tubes-2/ [https://web.archive.org/web/20140627215905/http://www.premierltg.com/should-you-replace-your-t8-fluorescent-lamps-with-t8-led-tubes-2/]
EX1014	Pyeon	U.S. Patent No. 9,240,227
EX1015	Parks	Wayback Machine capture of Michael Parks, *Don’t Burn Out! Calculating LED Current Limiting Resistor*, Mouser Electronics (Oct. 10, 2014, 6:43 AM), http://www.mouser.com/blog/dont-burn-out-calculating

Exhibit	Shorthand	Description
		-led-current-limiting-resistor [https://web.archive.org/web/20141010064339/http://www.mouser.com/blog/dont-burn-out-calculating-led-current-limiting-resistor]
EX1016	Etkina	Eugenia Etkina & Gorazd Planinšič, *Light-Emitting Diodes: Exploration of Underlying Physics*, 52 The Physics Teacher 212 (2014)
EX1017	Briggs	U.S. Patent No. 8,564,214
EX1018	Mandal	M.K. Mandal & B.C. Sarkar, *Ring oscillators: Characteristics and applications*, 48 Indian J. of Pure & Applied Physics 136 (2010)
EX1019	Recom	Wayback Machine capture of *High Power LED and DC/DC-Driver Applications*, RECOM Power (Jan. 6, 2015, 4:09 AM) http://www.recom-power.com/fileadmin/RECOM-Downloads/Whitepaper/WP_RCD_Applications_1107_EN.pdf [https://web.archive.org/web/20150106040908/http://www.recom-power.com/fileadmin/RECOM-Downloads/Whitepaper/WP_RCD_Applications_1107_EN.pdf]
EX1020	Guang	U.S. Patent App. Pub. No. 2017/0303353
EX1021	Esaki	U.S. Patent No. 8,872,437
EX1022	Physics-Classroom	Wayback Machine capture of *Two Types of Connections*, The Physics Classroom (Dec. 01, 2011, 12:54 AM), https://www.physicsclassroom.com/Class/circuits/u9l4b.cfm [https://web.archive.org/web/20111201005447/https://www.physicsclassroom.com/Class/circuits/u9l4b.cfm]
EX1023	Nave-1	Wayback Machine capture of Rod Nave, *OR Gate*, HyperPhysics (Mar. 3, 2004, 3:58 PM), http://hyperphysics.phy-astr.gsu.edu/hbase/Electronic/or.html [https://web.archive.org/web/20040303155843/http://hyperphysics.phy-astr.gsu.edu/hbase/Electronic/or.html]
EX1024	Nave-2	Wayback Machine capture of Rod Nave, *Relaxation Oscillator Concept*, HyperPhysics (May 1, 2001, 4:38 AM), http://hyperphysics.phy-astr.gsu.edu/hbase/

Exhibit	Shorthand	Description
		electronic/relaxo.html [https://web.archive.org/web/20010501043853/http://hyperphysics.phy-astr.gsu.edu/hbase/electronic/relaxo.html]
EX1025	Actel	Wayback Machine capture of *Using Schmitt Triggers for Low Slew-Rate Input*, Actel (Sept. 19, 2014, 1:18AM), http://www.microsemi.com/document-portal/doc_download/130021-ac161-using-schmitt-triggers-for-low-slew-rate-input-app-note [https://web.archive.org/web/20140919011857/http://www.microsemi.com/document-portal/doc_download/130021-ac161-using-schmitt-triggers-for-low-slew-rate-input-app-note]
EX1026		Claim Construction Order, *Jiaxing Super Lighting Elec. Appliance Co., Ltd. v. CH Lighting Tech. Co. Ltd.*, No. 6:20-CV-00018, Dkt. No. 57 (W.D. Tex. Oct. 24, 2020)
EX1034		Plaintiffs Jiaxing Super Lighting Electric Appliance Co., Ltd., and Obert, Inc.'s Preliminary Infringement Contentions, Claim Chart A1, *Jiaxing Super Lighting Elec. Appliance Co., Ltd. v. Current Lighting Solutions, LLC d/b/a GE Current*, No. 6:22-CV-00534-ADA (W.D. Tex. Oct. 19, 2022)
EX1035		Plaintiffs Jiaxing Super Lighting Electric Appliance Co., Ltd., and Obert, Inc.'s Preliminary Infringement Contentions, Claim Chart A2, *Jiaxing Super Lighting Elec. Appliance Co., Ltd. v. Current Lighting Solutions, LLC d/b/a GE Current*, No. 6:22-CV-00534-ADA (W.D. Tex. Oct. 19, 2022)

I. INTRODUCTION

1. My name is Michael Lebby. I have been retained by Current Lighting Solutions, LLC d/b/a GE Current ("Current Lighting") as an independent expert in the relevant art.

II. PROFESSIONAL BACKGROUND

2. I earned a Doctor of Philosophy (Ph.D) in 1987 from the University of Bradford, United Kingdom (UK). My Ph.D. thesis involved the design and fabrication of both optoelectronic and electronic semiconductor devices, and their associated characterization.

3. In 2004, I was awarded a Doctor of Engineering (D.Eng.) degree (a higher doctorate degree) from University of Bradford for my technical contributions to the field, with citation to "Technical Contributions to Optoelectronics."

4. I also earned a Master of Business Administration (MBA) in 1984 and a Bachelor of Engineering (B.Eng.) in 1985, both from the University of Bradford. For my B.Eng. degree, I wrote my thesis on the computer aided testing of semiconductor devices.

5. I am a technologist and an internationally-recognized business leader with nearly 40 years of experience working in integrated photonics, electronics, and optoelectronics design and manufacturing. I am serving as an expert in the field of electronics and lighting technologies, including light-emitting diodes (LEDs).

6. Throughout the course of my educational and professional activities, I have worked extensively with devices like the LED devices and electronics at issue in this case. In general, I have worked in nearly every aspect of the optoelectronics and electronics business, ranging from epitaxial wafer growth, device design using modeling and simulation, device fabrication, circuit-design, testing, and qualification, to the implementation of devices into packages, both hermetic and non-hermetic, as well as analysis of package materials such as plastics (including plastic housings such as resin-packaged lead frame housings), metallic-based packages, semiconductor-based packages, ceramic-based packages, and printed circuit board electronics. I have also designed device packages (through-pin, surface mount, flip-chip, and various combinations thereof) for printed circuit board mounting. Many of the designed packages were implemented into modules and sub-system/luminaire applications. The modules have included fiber-optic, electronics, display, lighting, and sensing-based technologies.

7. I have also worked in commercially based industrial research-and-development laboratories to bring new optoelectronic, electronic, and photonic-based technologies from the research proof-of-concept phase through prototyping and qualified manufacturing for volume release. I have been both an entrepreneur (*e.g.*, Ignis Optics Inc, One Chip Photonics Inc., Lightwave Logic Inc.), as well as an intrapreneur (*e.g.*, Motorola, Intel, TE Connectivity (previously Tyco Electronics,

and AMP), AT&T Bell Labs). In these roles I created innovative new programs, both as entrepreneurial venture backed start-ups as well as intrapreneurial corporate funded programs/divisions. I have built these entities to develop electronics, optoelectronics, and photonics technology emerge from the laboratory and fabrication clean room to production factories.

8. I currently serve as CEO of Lightwave Logic Inc, a public company.

9. I also currently serve as a Technical Expert to the European Commission, where my work has focused on LEDs, displays, lighting, organic LEDS (OLEDs), photonics devices, and other optical devices.

10. In academia, I have served as a professor of optoelectronics at Glyndŵr University, Wales, UK. Google Scholar currently assigns me an h-index of 47, an i10-index of 168, and over 8700 citations.

11. With regard to professional organizations, I serve as a Fellow of the National Academy of Inventors (NAI), the Institute of Electrical and Electronic Engineers (IEEE), and the Optical Society of America (OSA).

12. I regularly speak at technical conferences and have appeared in panels and interviews many times. I have served as chairman of the International PIC conference based in Europe since its conception in 2015.

13. I am a co-inventor of the first oxide vertical cavity surface emitting laser (VCSEL), which is now implemented in various consumer applications,

including Apple's iPhone Face ID feature and PC laser mice. This invention issued on 25th October, 1994, as U.S. Patent No. 5,359,618, entitled "High Efficiency VCSEL and Method of Fabrication".

14. In addition, I have over 230 issued utility patents with the USPTO in subjects such as electronics, optoelectronics, photonics, packaging, transceiver modules, optical sub-assemblies, materials, epitaxial growth, device design, assembly, and various active and passive components (both electronic and optoelectronic).

15. My CV, which is appended as Appendix A to this declaration, includes a listing of patents applications on which I am an inventor.

16. Because of my background, training, and experience, I am qualified as an expert to explain the background of the technology encompassed by the '397 Patent as well as to opine on the validity of the claims of the '397 Patent in view of the prior art references discussed herein.

III. COMPENSATION

17. My work on this matter is being billed at my customary rate of $450.00 per hour. Also, I am being reimbursed for reasonable expenses I incur in relation to my services. I will be paid regardless of the outcome of any proceeding that my work is used in.

IV. OVERVIEW OF TASK & BASIS FOR OPINIONS

18. I have been asked to review the ’140 Patent. I have been asked to provide opinions related to certain issues from the perspective of a person of ordinary skill, having knowledge of the relevant art, as of March 10, 2015, the earliest claimed priority date (“ECPD”), and—except where otherwise noted—the opinions stated in this declaration are from that perspective. The qualifications and abilities of such a person are described in Section V below.

19. More particularly, I have been informed that this proceeding is currently at a preliminary stage during which the Patent Trial and Appeal Board will decide whether the Petition establishes a reasonable likelihood of at least one claim of the ’140 Patent being unpatentable.

20. My opinions are based on my education, training, and experience as well as items that I reviewed to prepare my opinions, including the documents listed in the Exhibit List included with the Petition and any other items I reference in my below analysis.

21. I have not been asked to take a position on whether a given claim would have been legally obvious to a POSITA at the time of the alleged invention, but I have been told that some or all of my opinions are being used to support the argument that claims of the ’140 Patent are obvious.

22. I understand that other issues may arise that require further explanation, and I will provide that explanation if appropriate. As a result, I respectfully reserve the right to update and supplement this declaration and the information and opinions provided herein.

V. LEVEL OF SKILL IN THE RELEVANT ART

23. I understand that the level of ordinary skill may be reflected by the prior art of record, and that a person of ordinary skill in the art ("POSITA") to which the claimed subject matter pertains would have the capability of understanding the scientific and engineering principles applicable to the pertinent art.

24. I understand there are multiple factors relevant to determining the level of ordinary skill in the pertinent art, including (1) the levels of education and experience of persons working in the field at the time of the invention; (2) the sophistication of the technology; (3) the types of problems encountered in the field; (4) the prior art solutions to those problems; and (5) the rapidity with which innovations are made.

25. A POSITA as of March 10, 2015—the ECPD—would have had at least a bachelor's degree in Electrical Engineering or a comparable field and 3 years of experience designing lighting fixtures or systems, or equivalents. More education could have compensated for less experience, and vice versa. Such a POSITA would

have been familiar with the concepts and types of LED lighting technology described below.

26. Under this definition, I at least possessed ordinary skill in the art at the ECPD. I have applied this definition of a POSITA in rendering my opinions below.

VI. OVERVIEW OF THE TECHNICAL FIELD

27. LED tube lamps are LED lighting devices that are used in place of fluorescent tube lamps. LED light sources can be disposed inside tubes made to retrofit into existing fluorescent light sockets or fixtures. Premier, 1-3*; see*, *e.g.*, Ivey813, 2:50-54.

28. Such preexisting fluorescent light sockets and fixtures include devices called ballasts, which start and maintain the light output of a fluorescent tube lamp. Premier, 3. Ballasts are essential to allowing fluorescent lights to work. Premier, 3.

29. LED tube lamps, however, do not require a ballast to operate and thus, in order to allow an LED tube lamp to retrofit into a fluorescent light socket or fixture, the existence of the ballast must be dealt with. Premier, 3. Several solutions have historically existed. A first solution is to include an integrated LED driver that operates on an existing ballast. Premier, 3. Tube lamps that include such drivers are known as "Type A" LED tube lamps. Premier, 3. Such drivers allow the LED tube lamp to be plugged directly into the fluorescent light socket or fixture without any additional setup, creating a simple installation process. Premier, 3. The tradeoff,

however, is that, by utilizing the ballast, the LED tube lamp's operation thus becomes contingent on the lifespan of the ballast, increasing maintenance costs, while also reducing energy efficiency. Premier, 3.

30. An alternative solution is to bypass the ballast and connect directly to mains. Premier, 3-4; *see, e.g.*, Sadwick, ¶[0173]. Such ballast-bypass LED tube lamps are known as "Type B" LED tubes. Premier, 3-4. By bypassing a ballast, type B tubes thus provide numerous significant benefits, including lowering maintenance costs and increasing energy efficiency. Premier, 3-4. A number of tradeoffs exist, however, including requiring modifications to the fluorescent light socket or fixture, which makes setup more complicated—and potentially dangerous—when compared to Type A tubes. Premier, 3-4.

31. One particular tradeoff is that, by connecting directly to mains line power, installation of the type B tube becomes potentially dangerous, as the user may be accidentally exposed to mains and receive a shock. Such a risk exists not only when rewiring the fluorescent light fixture or socket itself (*e.g.*, Premier, 3-4), but also when simply relamping a type B tube (*e.g.*, Ivey345, ¶[0005]; Sadwick, ¶[0071]). Specifically, during relamping, should only one end of the tube be installed into the now mains powered fixture or socket, the exposed pins on the other end of the tube may become powered on or hot. Ivey345, ¶[0005]; Sadwick,

¶[0071]. When touched by a user that is grounded, the user would thus be shocked, potentially fatally. Ivey345, ¶[0005]; Sadwick, ¶[0071].

32. Solutions to address the shock hazard from such a fault configuration already existed by the ECPD. For example, Ivey345 and Sadwick, discussed in further detail in Section 43 below, each teach implementing a shock protection circuit specifically designed to detect and prevent the fault configuration above from occurring by periodically detecting voltage across or current through the tube lamp using a test resistor and, when such varies below an expected threshold due to the addition of a human (and thus resistance) to the circuit, preventing the tube from being powered on. Ivey345, ¶[0010]; Sadwick, ¶[0080].

VII. ’140 PATENT

A. Overview

33. The ’140 Patent discusses the shock hazard associated with the fault configuration above and discloses, as a solution, an “installation detection circuit” configured in an LED tube lamp to prevent a user from being electrically shocked during relamping. ’140 Patent, 3:62-67, Abst., 5:7-26. One embodiment of such an installation detection circuit is depicted in Figure 15B:

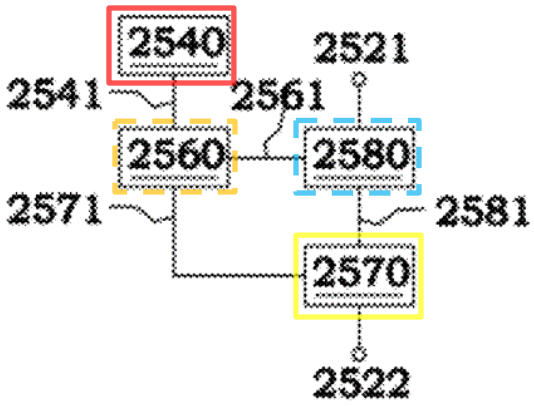

Fig. 15B

'140 Patent, Fig. 15B (annotated), 38:39-41. The depicted installation detection circuit includes a "detection pulse generating module 2540" (solid-red), which periodically outputs a "pulse signal" to "pulse signal output terminal 2541. '140 Patent, Fig. 15B, 38:41-44, 38:58-62, 45:50-63. Figure 15C depicts an exemplary embodiment of a detection pulse generating module 2640:

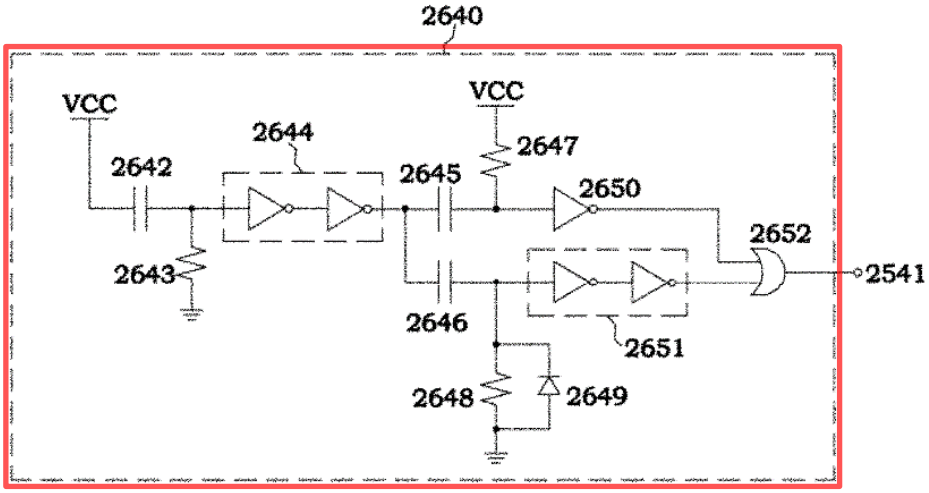

Fig. 15C

'140 Patent, Fig. 15H (annotated), 40:5-11.

34. The pulse signal is received by "detection result latching circuit 2560" (dotted-orange), which may use the pulse signal as "a time point" for when to store a "detection result signal" received at its "detection result terminal 2571." '140 Patent, Fig. 15B, 38:58-39:6, 38:50-54. Detection result latching circuit 2560 outputs the stored detection result via "detection result latching terminal 2561" ('140 Patent, Fig. 15B, 38:58-39:6) and, in some embodiments, may also store and output the pulse signal itself ('140 Patent, 41:27-37, 39:39-47). Figure 15E depicts one such embodiment of a detection result latching circuit 2660:

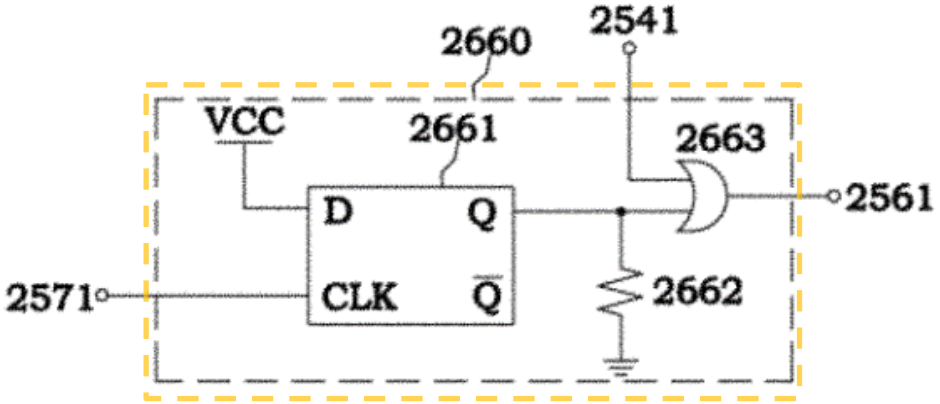

Fig. 15E

'140 Patent, Fig. 15E (annotated), 43:16-58.

35. At the receiving end is "switch circuit 2580" (dotted-blue), which controls the conducting state across the LED tube lamp—i.e., the LED tube lamp's "power loop." '140 Patent, Fig. 15B, 38:58-39:9, 39:44-49. Thus, when detection result latching circuit 2560's output is high (such as when the stored detection result is high and/or, in some embodiments, when the pulse is high), the power loop

conducts. ’140 Patent, 39:44-49. Figure 15F depicts one embodiment of a switch circuit 2580:

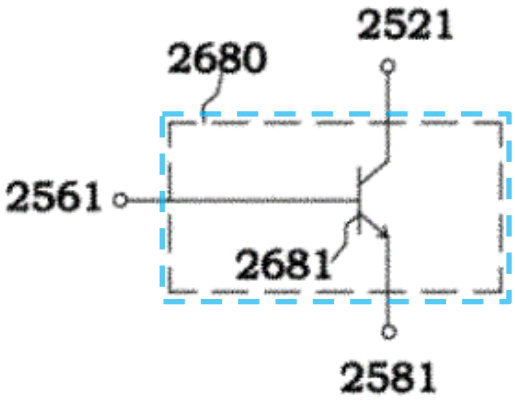

Fig. 15F

’140 Patent, Fig. 15F (annotated), 43:59-44:17.

36. Lastly, the detection determining circuit includes “detection determining circuit 2570” (solid-yellow), which “detects a sampling signal on the power loop” such as “current passing through terminals 2521 and 2522” and detects whether such current “is above or below a specific current value.” ’140 Patent, Fig. 15B, 39:49-54, 38:54-57. When the LED tube “is correctly installed on a lamp socket,” such current will be above the specific current value, and detection determining circuit 2570 will output a “high logic level” detection result signal to detection result latching circuit 2560 over detection result latching terminal 2561. ’140 Patent, 42:56-43:8. The opposite occurs “when the LED tube lamp is incorrectly installed on the lamp socket or one end cap thereof is inserted into the lamp socket but the other one is grounded by an object such as a human body.” ’140

Patent, 43:9-15. Figure 15D depicts one embodiment of a detection determining circuit 2670:

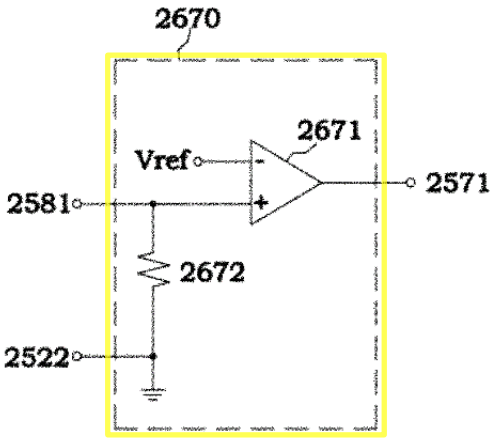

Fig. 15D

'140 Patent, Fig. 15D (annotated), 42:46-43:15.

37. In accordance with Figure 15B and the above discussion, Figures 15C-15F may be combined to form the installation detection circuit depicted below:

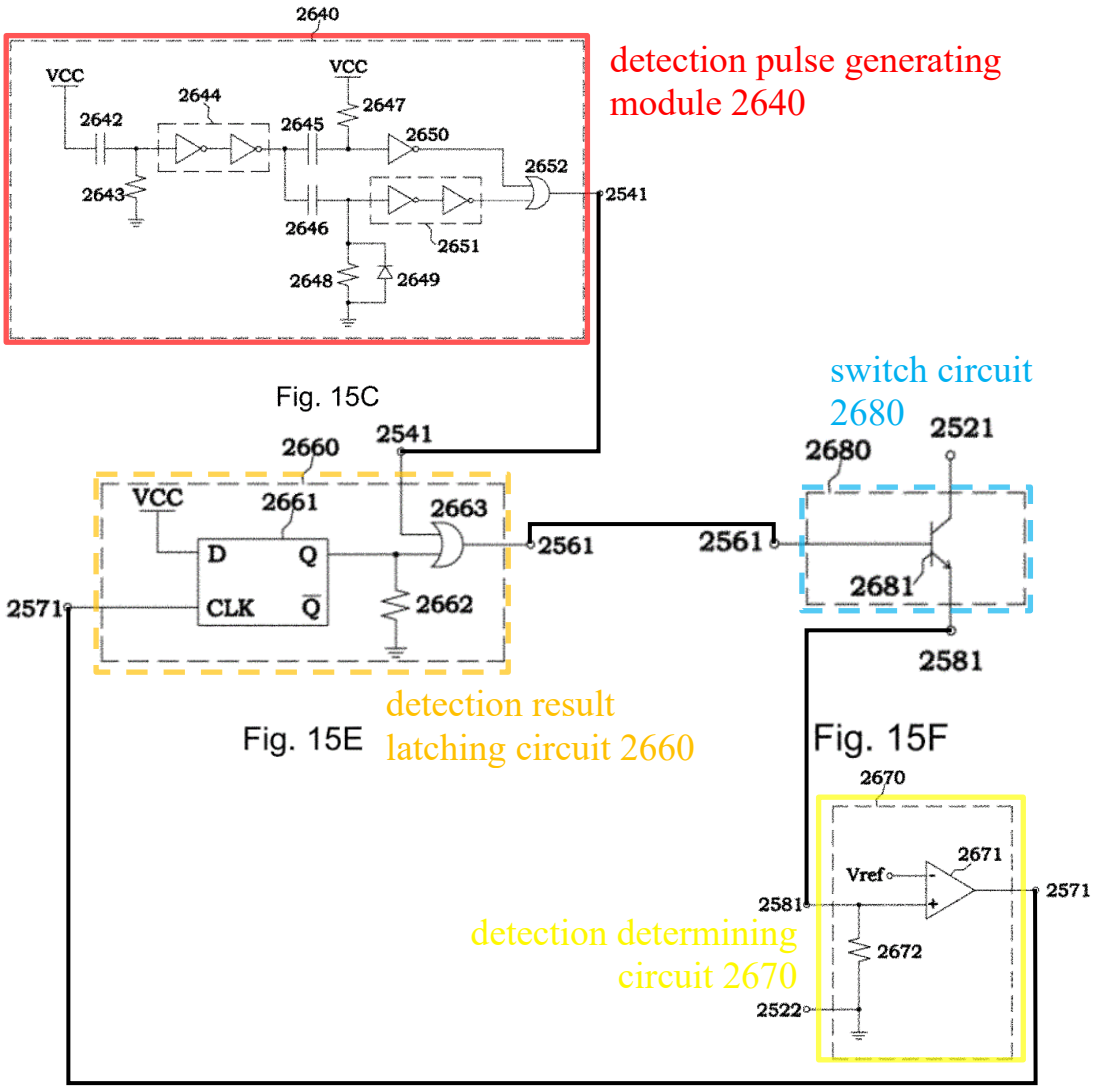

Fig. 15D

38. Additionally, the '140 Patent depicts another installation detection circuit embodiment in Figure 15G with a similar layout and operation as that depicted in Figure 15B, but where pulse generating module 2740 (solid-red) receives the output of detection result latching circuit 2760 (dotted-orange) as feedback to enable pulse generating module 2740 to "not generate any pulse signal while the power loop remains conductive":

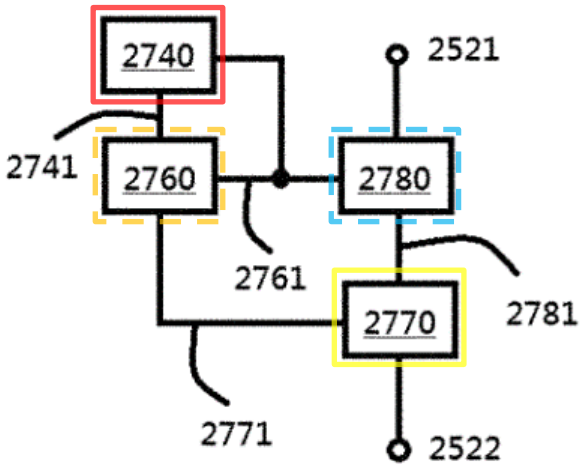

Fig. 15G

'140 Patent, Fig. 15G (annotated), 52:1-51.

B. Claim Construction

39. For purposes of this IPR, I apply the common and ordinary meanings of claim terms in the '140 Patent. At this time, unless indicated otherwise below, all terms should be given their plain and ordinary meaning.

1. "means for generating"

40. Claim 21 recites "means for generating one or more pulse signals." In my opinion, "means for generating" does not recite any structure and instead merely recites a function of "generating one or more pulse signals," as well as generic means for performing this function. The specification, however, discloses structures that "generate[] a pulse signal" and thus perform the claimed function: module 2540 in Fig. 15B, module 2740 in Fig. 15G, and circuits depicted in Figs. 15C and 15H. *E.g.*, '140 Patent, 38:58-62, 47:16-19. Because such structures perform the claimed

function, a POSITA would have associated such structures with the claimed function and thus found such structures to be corresponding structure to the claimed "means for generating."

2. "means for detecting"

41. Claims 21-23 recite "means for detecting during one or more pulse signals whether the LED tube lamp is properly installed on a lamp socket… wherein the means for detecting is configured to detect a sampling signal on the power loop for determining whether the LED tube lamp is properly installed on the lamp socket." In my opinion, "means for detecting" does not recite any structure. Instead, it recites merely a function of "detecting during one or more pulse signals whether the LED tube lamp is properly installed on a lamp socket" and "detect[ing] a sampling signal on the power loop for determining whether the LED tube lamp is properly installed on the lamp socket"—which may be summarized as "detecting a sampling signal on the power loop during the one or more pulse signals for determining whether the LED tube lamp is properly installed"—as well as generic means for performing this function. The specification, however, discloses structures that "detect[] a sampling signal on the power loop" during a pulse signal to determine whether the LED tube is installed properly and thus perform the claimed function: module 2570 in Fig. 15B, module 2770 in Fig. 15G, and circuits depicted in Figs. 15D and 15K. *E.g.*, '140 Patent, 39:44-58, 37:46-38:4, 48:19-41. Because such

structures perform the claimed function, a POSITA would have associated such structures with the claimed function and thus found such structures to be corresponding structure to the claimed "means for detecting."

3. "detection result latching circuit"

42. Claims 4-5, 23-25, 27, and 31-32 recite a "detection result latching circuit." I understand that, in the *CH* Action, the court interpreted the term to mean "circuit that stores the detected result and outputs a high logic value when either the stored detected result ***or the pulse signal output terminal (e.g., inputs 2541 or 2741 in Figs. 15E and 15I)*** has a high logic value." EX1026, 6 (emphasis added).

43. I disagree with the *CH* Court's interpretation, particularly the emphasized portion above. The claims contain no requirement that the detection result latching circuit necessarily outputs a high logic value when receiving a high logic level signal from the claimed "pulse generating circuit"—i.e., a "pulse signal" ('140 Patent, 41:23-27). In fact, the '140 Patent explains that, in some embodiments, the pulse signal can be received by the detection result latching circuit simply "to inform the detection result latching circuit 2560 of a time point for latching (storing) the detection result." *E.g.*, '140 Patent, 38:58-62, claims 25, 27. The *CH* Court's construction is thus too restrictive. For purposes of this IPR, the term should instead be given its common and ordinary meaning.

VIII. COMPARISON OF PRIOR ART TO THE '140 PATENT'S CHALLENGED CLAIMS

A. Ground 1: Ivey813 and Ivey345, and Claims 1, 3-4, 21-28, 30-31, and 35

1. Ivey813

44. Ivey813 describes "a light emitting diode (LED) based light tube," particularly "a circuit board mount for the LED light tube and methods of mounting the circuit board." Ivey813, 1:13-16. Ivey813's Figure 1 depicts an example:

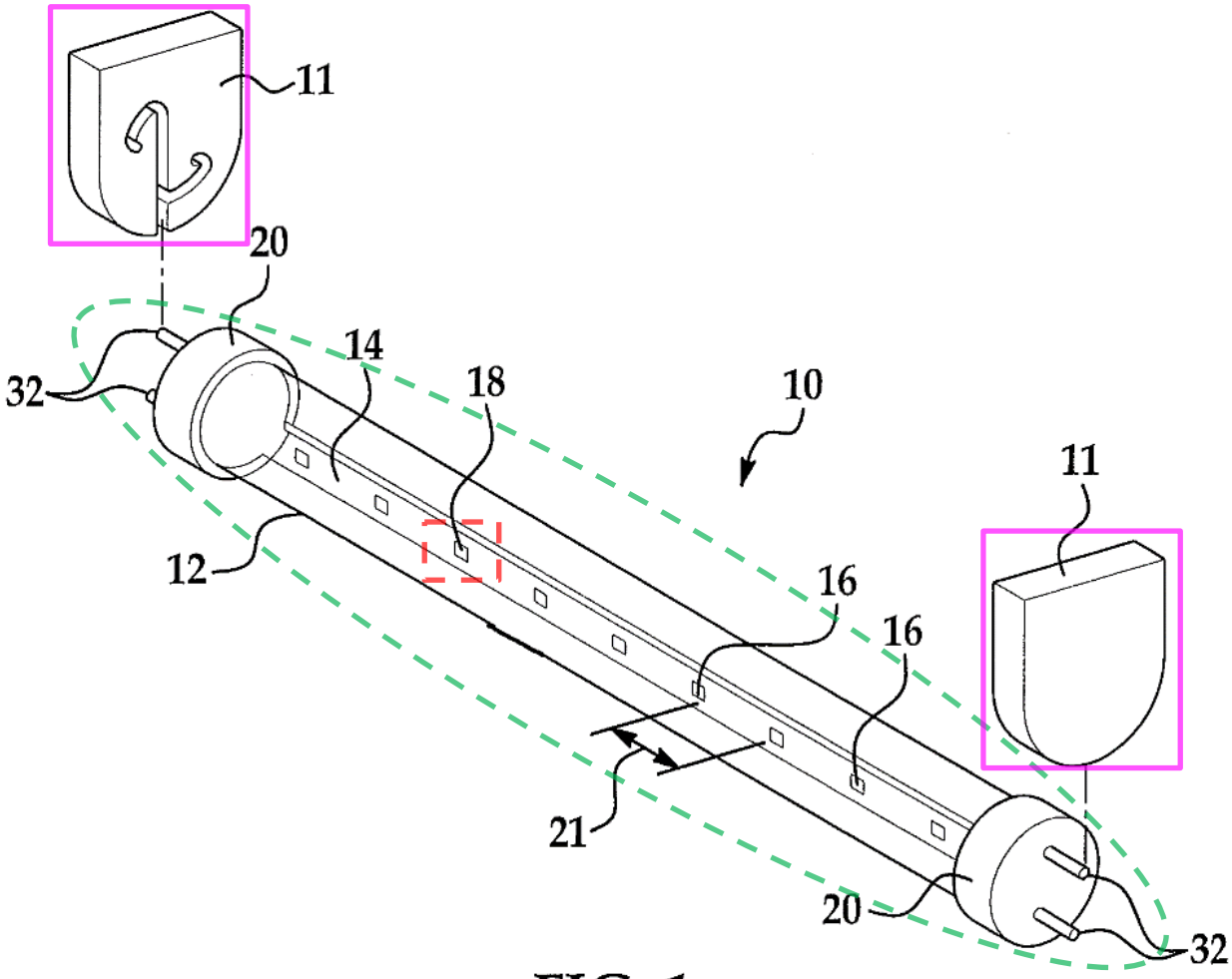

FIG. 1

Ivey813, Fig. 1 (annotated). As Ivey813 teaches, Ivey813's Figure 1 depicts "LED light tube 10" (dotted-green) comprising an elongated "housing 12" with two "end caps 20" attached at opposing ends of housing 12. Ivey813, 1:37-39, 1:50-51. Each end cap 20 includes "pins 32" that may electrically connect the LED light tube to fixture 11 (solid-pink). Ivey813, 5:1-16. Fixture 11 can be, "for example, an existing fluorescent lamp fixture" and thus "can contain a ballast," or can instead directly power the LED light tube 10 with mains line power, such as when the LED light tube 10 is a ballast-bypass ("type B") LED tube.[1] *See* Ivey813, 2:51-56; '140 Patent, 4:1-11; Premier, 3-4. The LED light tube also comprises "circuit board 14" spanning housing 12. Ivey813, 1:37-39. Circuit board 14 has "LEDs 18" (dotted-red) mounted to its surface and conductive connections from the pins 32 to the LEDs 18. Ivey813, 2:13-17, 3:27-37, 3:63-67.

[1] Should there be an argument that LED light tube 10 is not disclosed as being a type B LED tube, a POSITA would have nevertheless been motivated to modify LED light tube 10 to be a type B LED tube to increase power efficiency and reduce maintenance cost (*see* Premier, 3-4) and would have known how to do so (*see* '140 Patent, 4:1-11).

45. Circuit board 14 also includes "power converters 36 and other circuitry" near end caps 20 to "convert the power received through the fixture [via the pins] into power usable by and suitable for the LEDs":

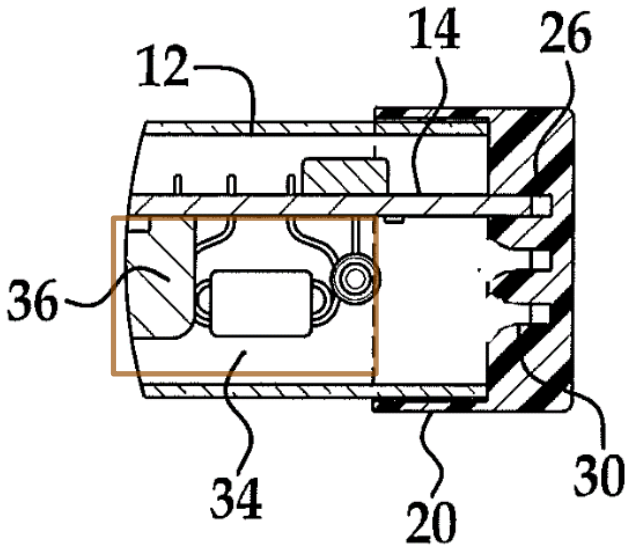

FIG. 7

Ivey813, Fig. 7 (annotated), 5:31-35. Power converter 36 (solid-brown) includes "one or more of an inrush protection circuit, a surge suppressor circuit, a noise filter circuit, a rectifier circuit, a main filter circuit, a current regulator circuit and a shunt voltage regulator circuit." Ivey813, 5:36-39.

2. Ivey345

46. Ivey345 is directed to "a system and method for protecting a person from electrical shock when interacting with an electrical device." Ivey345, ¶[0002], code (72); Ivey813, code (75). As Ivey345 teaches, "[c]ompact fluorescent light bulbs (CFLs) and light emitting diode based (LED-based) lights are gaining

popularity," but such "line-powered electrical devices" also carry certain "drawbacks." Ivey345, ¶[0004]. Particularly, "if the power terminal is connected using one connector and the subject, for example a person installing a new bulb, comes into contact with the return terminal in another connector that has not yet been mated, the person may receive a shock by completing the circuit from the return terminal to ground." Ivey345, ¶[0005].

47. As a solution, Ivey345 describes implementing a "current limiting circuit" that "operates to electrically detect the presence of a foreign object, for example, a person's body, in the circuit path and limit the flow of current through the object while allowing substantially full current to flow when an intended electrical connection is established between a power source and load." Ivey345, ¶[0010]. Ivey345's Figure 3 depicts one embodiment:

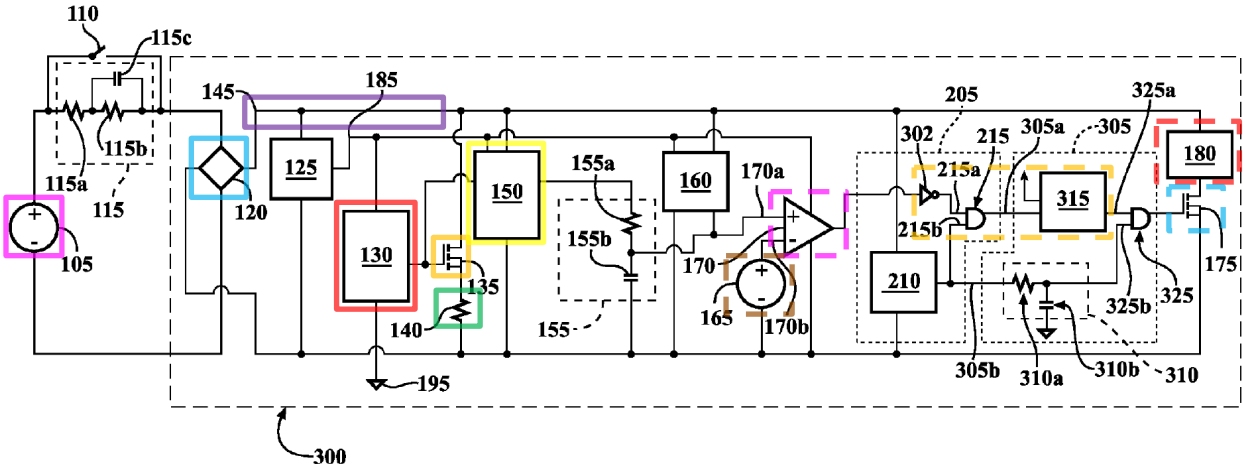

FIG. 3

Ivey345, Fig. 3 (annotated). In this embodiment, "power input 105" (solid-pink) delivers AC line power to "current limiting circuit 300," which includes "rectifier

120" (solid-blue) to rectify the power "from an AC wave to a DC wave." Ivey345, ¶¶[0015], [0020], [0041]. The rectified DC power is provided to "device power rail 145" (purple) that connects to "main load 180" (dotted-red), which "may be an LED-based light or CFL." Ivey345, ¶¶[0016], [0037].

48. "[L]oad switch 175" (dotted-blue) controls whether current may flow from rectifier 120 and device power rail 145 through main load 180. Ivey345, ¶¶[0010], [0045]. In a "fault configuration" where power input 105 and the current limiting circuit are connected "through a subject, for example, a person's body" (represented by "human body resistor-capacitor model 115"), load switch 175 "remains off" to prevent current flow through main load 180, "thereby maintaining the current flowing through the subject at a low and safe level." Ivey345, ¶¶[0013], [0010], [0035]-[0036], [0045]. By contrast, in a "normal circuit configuration" where power input 105 and the current limiting circuit are "connected directly" (represented by the closing of "switch 110"), load switch 175 is closed, allowing main load 180 to be powered on. Ivey345, ¶¶[0013], [0010], [0035]-[0036], [0045].

49. Ivey345's current limiting circuit includes "auxiliary power supply 125," which is directly powered by rectifier 120 and provides, e.g., a standard 5V digital supply voltage; and "oscillator 130" (solid-red), which is powered by auxiliary power supply 125. Ivey345, ¶¶[0016]-[0017], [0019]. "[O]scillator 130 may be configured as a harmonic-type oscillator or a relaxation-type oscillator, a

crystal oscillator, a ring oscillator, a silicon micromechanical resonator, an oscillating output of a digital circuit or microprocessor, or any other type of oscillator." Ivey345, ¶[0019].

50. Oscillator 130's output is "electrically connected to an input of [a] test load switch 135 [(solid-orange)], such that the test load switch 135 is controlled by the oscillator 130." Ivey345, ¶¶[0021]-[0022], [0024]. Test load switch 135 is connected to device power rail 145 and "Z test load 140" (solid-green) such that, when test load switch 135 is closed by oscillator 130's output, current is permitted to flow from device power rail 145 through Z test load 140. Ivey345, ¶¶[0021]-[0024].

51. An auxiliary-powered "detector 150" (solid-yellow), which also receives oscillator 130's clock signal and thus operates synchronously with test load switch 135's activation, "detect[s] a variation in the current draw or voltage across the device power rail 145 due to the oscillating change in the current going through the Z test load 140" and "output[s] a signal in response to a change in the current of the Z test load 140." Ivey345, ¶¶[0024]-[0027]. Detector 150's output signal is "a voltage, current, or other type of signal" that "decreases as the variation in the device power rail 145 increases" (which results when a fault configuration occurs) and "increases as the variation in the device power rail 145 decreases" (which results when a normal configuration occurs). Ivey345, ¶¶[0024]-[0027], [0010].

52. Detector 150's output signal is noise-filtered by "detector low pass filter 155" and then sent to the non-inverting input of an auxiliary-powered "comparator 170" (dotted-pink). Ivey345, ¶¶[0028]-[0029], Fig. 3. Comparator 170 also receives the output of "detection threshold signal source 165" (dotted-brown) at comparator 170's inverting input, compares these two inputs, "and produces an output relating to the comparison." Ivey345, ¶[0030], Fig. 3. Specifically, if detector 150's output signal is lower than the threshold signal (corresponding to a fault configuration), comparator 170 outputs a "low" signal, and vice versa. Ivey345, ¶¶[0030]-[0032].

53. Comparator 170's output is inverted by "logic inverter 302" and then sent to "main load shut-off latch 315" (together in dotted-orange), which "may be constructed from an electrical flip-flop, such as a D, SR, or other type of flip-flop or latch" and, although not depicted in Figure 3, may be synchronized with oscillator 130's clock signal. Ivey345, ¶[0043]. The inverted comparator output is received at latch 315's "'clock' input" to control whether latch 315 "should accept a state change." Ivey345, ¶[0044]. The output of latch 315 is connected to the input of load switch 175, which, as discussed, controls whether current may flow through main load 180. Ivey345, ¶¶[0035]-[0036], [0045]-[0046], [0010].

54. Initially, "main load shut-off latch 315 starts at power-up in the 'on' state" and thus latches a high output for turning on load switch 175. Ivey345,

¶¶[0045]-[0046]. If a normal configuration is thereafter detected, then latch 315 correspondingly receives a low inverted comparator output signal, causing latch 315 to continue in the "on" state and thus current flow to be maintained through load switch 175 and main load 180. Ivey345, ¶¶[0045]-[0046], [0030]-[0032]. However, if a fault configuration is detected at any time, then latch 315 instead receives a high inverted comparator output signal and thus changes to an off state, thereby "latching a low output" and "disabling" load switch 175. Ivey345, ¶¶[0045]-[0046], [0030]-[0032]. Latch 315 thereafter remains in this off state until "power is removed from the circuit and reapplied." Ivey345, ¶¶[0044], [0041].

3. Rationale to Combine Ivey813 with Ivey345

55. Ivey813 describes an "LED light tube," which may be mains line powered. Ivey813, 2:51-56; *see also* '140 Patent, 4:1-11; Premier, 3-4. And Ivey345 teaches improving "LED-based lights[] and other line-powered electrical devices" by implementing a "current limiting circuit" within such lights for "protecting a person from electrical shock" during relamping. Ivey345, ¶¶[0002], [0004]-[0005]. Thus, Ivey345 expressly teaches combining Ivey345's current limiting circuit into a line-powered LED-based light, such as the mains line powered (type B) version of Ivey813's LED-based light tube, and therefore contains an express teaching, suggestion, and motivation to combine the two references. Indeed, Ivey345 names the same inventor as, but was filed two years after, Ivey813,

suggesting that the inventor himself had intended for Ivey345's current limiting circuit to be used to improve Ivey813's LED-based light tube. Ivey345, ¶[0002], code (72); Ivey813, code (75).

56. Such modification also improves user safety. As Ivey345 states, LED-based lights and other line-powered devices carry certain "drawbacks," namely that a subject user may be electrically shocked during relamping if the subject makes contact with the bulb's "return terminal" while the bulb's "power terminal" is connected (a fault configuration). Ivey345, ¶¶[0004]-[0005], [0013]; *accord* Premier, 4. Such a risk of shock is present in Ivey813's LED-based light tube when mains line powered. *See* Ivey813, 5:33-39; Premier, 4. Ivey345, however, provides a solution by disclosing a "current limiting circuit" that detects whether the above fault configuration is present and, when such is detected, prevents the LEDs in the LED-based light bulb from being energized and thus the user from being shocked. Ivey345, ¶¶[0010], [0037]. Given such teachings, a POSITA would have thus been motivated to modify the line-powered version of Ivey813's LED-based light tube by adding Ivey345's current limiting circuit to power converter 36, because doing so would have enabled power converter 36 to additionally "convert the power received through the fixture" to "a low and safe level" when a fault configuration occurs, thereby improving user safety during relamping. *See* Ivey813, 5:33-35; Ivey345, ¶¶[0010], [0004]-[0005].

4. The Resulting "Ivey Combination"

57. So modified, the combination of Ivey813 and Ivey345 (the "Ivey Combination") comprises Ivey813's "LED-based light tube," which is mains line powered by "fixture 11" (Ivey345's "power source 105") and utilizes Ivey345's "current limiting circuit" as an additional circuit within "[p]ower converter 36" to control whether current may flow from power converter 36's "rectifier circuit" (Ivey345's "rectifier 120") through the tube's "LEDs 18" (Ivey345's "main load 180") based on the current draw or voltage across the tube (Ivey345's "device power rail 145"). *See* Ivey813, 5:31-40; Ivey345, ¶¶[0024]-[0027], [0010].

5. Element-by-Element Analysis

(a) Limitation [1pre]: An installation detection circuit configured in a light-emitting diode (LED) tube lamp configured to receive an external driving signal,

58. To the extent claim 1's preamble is limiting, the Ivey Combination meets it by utilizing Ivey345's "current limiting circuit" (the claimed "installation detection circuit") within "power converter 36" of Ivey813's "LED-based light tube" ("configured in a light-emitting diode (LED) tube lamp"). Ivey813, 5:33-35; Ivey345, ¶[0010]; Section VIII.A.4; *see also* Sections VIII.A.5(b)-VIII.A.5(h).

59. Further, the tube receives mains AC power from "fixture 11" (Ivey345's "power source 105" (solid-pink)) ("configured to receive an external driving signal") and, using power converter 36's "rectifier circuit" (Ivey345's

"rectifier 120" (solid-blue)), rectifies such power "to a DC wave" for use by the current limiting circuit:

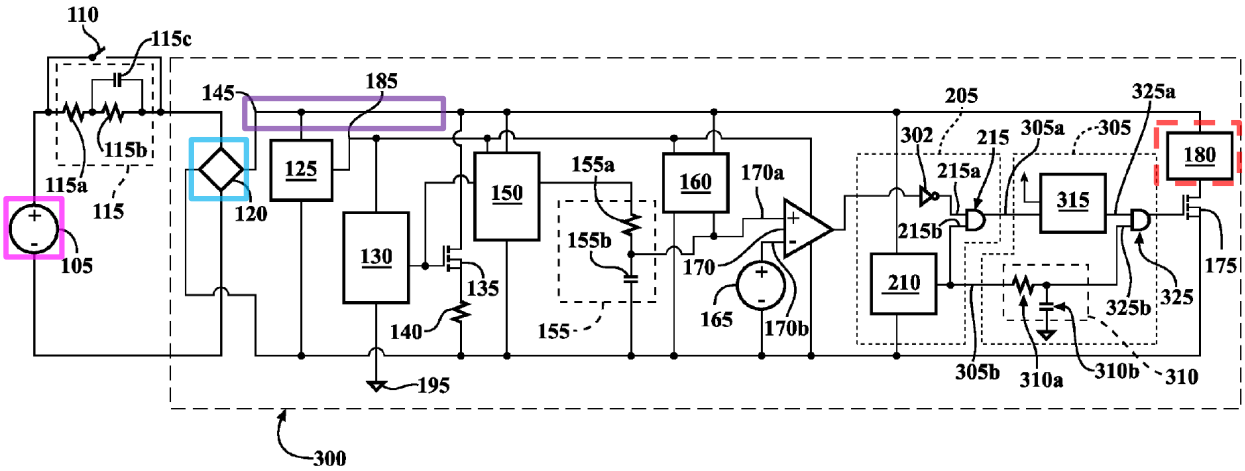

FIG. 3

Ivey813, 2:51-56, 5:36-39; Ivey345, Fig. 3 (annotated), ¶¶[0012], [0015]-[0016]; Section VIII.A.4. This DC power is also provided to "LEDs 18" (Ivey345's "main load 180" (dotted-red)) from the rectifier circuit (via Ivey345's "device power rail 145" (solid-purple)). Ivey813, 5:33-35; Ivey345, ¶¶[0016], [0037]; Section VIII.A.4.

(b) Limitation [1a]: the installation detection circuit comprising:
a pulse generating circuit configured to output one or more pulse signals;

60. Ivey345's current limiting circuit includes "oscillator 130" (solid-red) that outputs a clock signal that oscillates high and low, e.g., "a digital, continuous time output, a varying sinusoidal output, or another type of output" ("pulse generating circuit configured to output one or more pulse signals"):

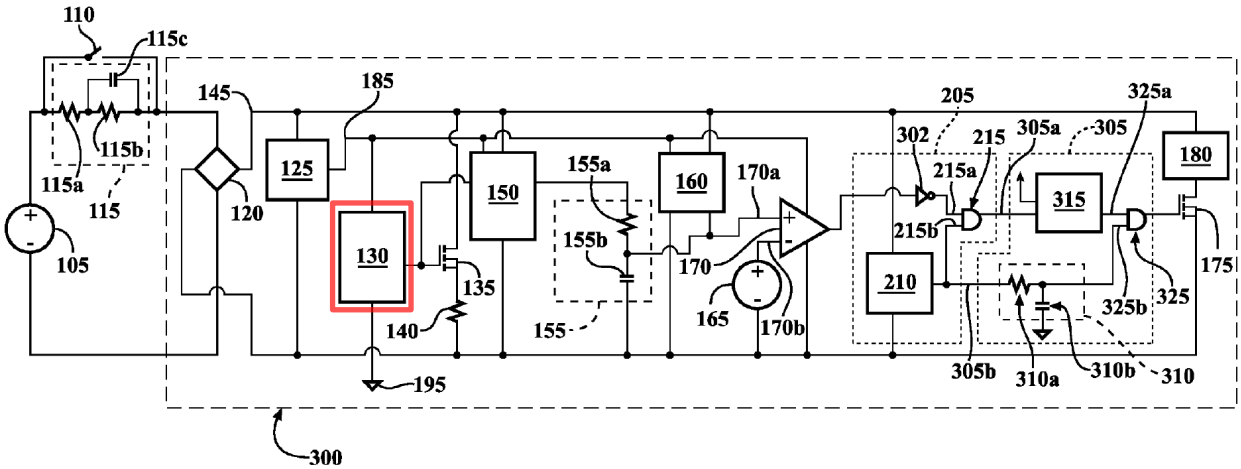

FIG. 3

Ivey345, Fig. 3 (annotated), ¶¶[0019], [0044]; *see also* '140 Patent, 41:23-27 (defining a "high logic level signal" as a "pulse signal"), 41:38-43 (defining a "low logic level signal" as the "stop[]" of the output of a pulse signal).

(c) Limitation [1b]: wherein the installation detection circuit is configured to detect during at least one of the one or more pulse signals whether the LED tube lamp is properly installed on a lamp socket, based on detecting a signal generated from the external driving signal; and

61. Also included are "test load switch 135" (solid-orange) and "Z test load 140" (solid-green):

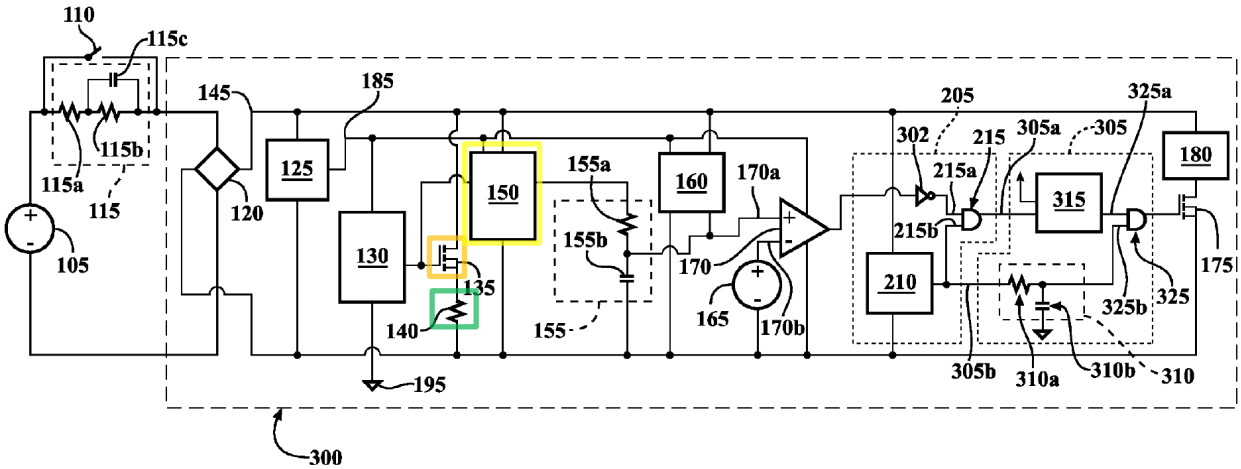

FIG. 3

Ivey345, Fig. 3 (annotated), ¶¶[0021]-[0023]. Oscillator 130's output is connected to the gate of test load switch 135, which opens and closes when oscillator 130's clock signal oscillates low and high, respectively. Ivey345, ¶¶[0020]-[0022], [0024], Fig. 3. When test load switch 135 is closed by oscillator 130's high output ("during at least one of the one or more pulse signals"), current is permitted to flow from device power rail 145 through Z test load 140. Ivey345, ¶¶[0020]-[0024].

62. The current limiting circuit further includes "detector 150" (solid-yellow), which also receives oscillator 130's clock signal and thus operates synchronously with test load switch 135's activation. Ivey345, ¶[0024]. Detector 150 "detect[s] a variation in the current draw or voltage across the device power rail 145 due to the oscillating change in the current going through the Z test load 140" ("detecting a signal generated from the external driving signal"). Ivey345, ¶¶[0024]-[0027]. This detected variation is used to detect whether a fault configuration exists ("detect… whether the LED tube lamp is properly installed on a lamp socket"): an

"increase[d]" variation corresponds to a fault caused by "the presence of a subject," whereas a "decrease[d]" variation corresponds to a normal "metallic connection" between the tube and fixture. Ivey345, ¶¶[0024]-[0026], [0010]; *see also infra* Sections VIII.A.5(e)-VIII.A.5(f).

(d) Limitation [1c]: a switch circuit coupled to the pulse generating circuit, wherein the one or more pulse signals control turning on and off of the switch circuit;

63. The current limiting circuit includes not only test load switch 135 but also "load switch 175" (dotted-blue):

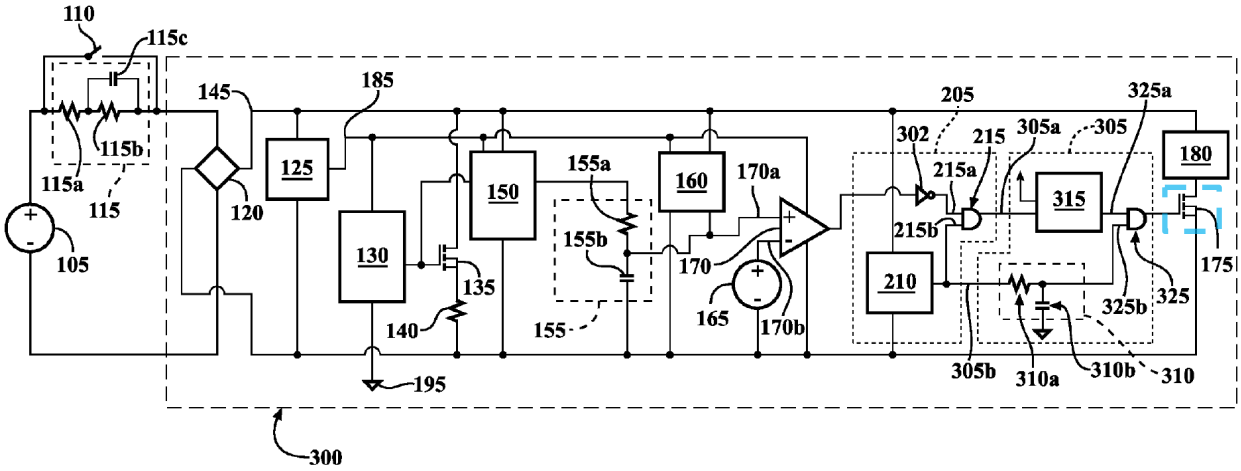

FIG. 3

Ivey345, Fig. 3 (annotated) ¶¶[0010], [0035]-[0036], [0045]; Ivey813, 2:57-60, 3:24-27. Load switch 175 meets the claimed "switch circuit." Specifically, detector 150, which is synchronized with oscillator 130's clock signal ("coupled to the pulse generating circuit"), detects a variation across device power rail 145. Ivey345, ¶¶[0024]-[0027]. This detected variation is thus based on oscillator 130's clock signal and ultimately determines whether load switch 175 is powered on or off.

Ivey345, ¶¶[0024]-[0027], [0030]-[0032], [0010], [0044]-[0045]; Section VIII.A.5(c). Oscillator 130's output therefore controls whether load switch 175 is powered on or off ("the one or more pulse signals control turning on and off of the switch circuit").

64. Alternatively, load switch 175 and test load switch 135 together form the claimed "switch circuit":

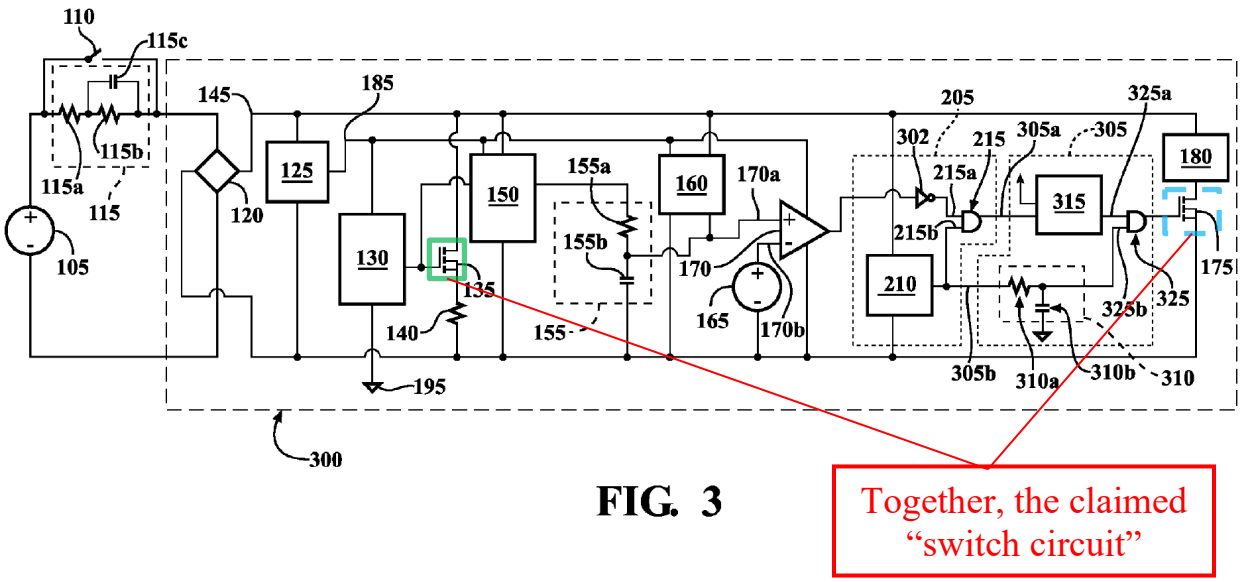

FIG. 3

Together, the claimed "switch circuit"

Ivey345, Fig. 3 (annotated). Specifically, test load switch 135's gate is connected to oscillator 130's output ("coupled to the pulse generating circuit"), causing test load switch 135 to open and close as oscillator 130's clock signal oscillates low and high, respectively ("the one or more pulse signals control turning on and off of the switch circuit"). Ivey345, ¶¶[0020]-[0022], [0024], Fig. 3. Further, a POSITA would have understood that a plurality of separate transistor switches that perform the claimed functions of the "switch circuit" would together meet the claimed

"switch circuit." '140 Patent, 9:28-51; *see also, e.g.*, Digi-Key (showing numerous "2 N-Channel (Dual)" FET products—i.e., two n-type MOSFETs formed on one integrated ***circuit***—were commercially available by the ECPD); Fairchild (datasheet for Fairchild Semiconductor FDG6303N, which is the first "2 N-Channel (Dual)" FET product listed in Digi-Key).

(e) Limitation [1d]: wherein the installation detection circuit is further configured to:
when it is detected during one of the one or more pulse signals that the LED tube lamp is not properly installed on the lamp socket, control the switch circuit to remain in an off state to cause a power loop of the LED tube lamp to be open; and

65. When detector 150 detects an increased variation across device power rail 145 corresponding to a fault configuration, detector 150 outputs a correspondingly "decrease[d]" signal, which is received by "comparator 170" (dotted-pink):

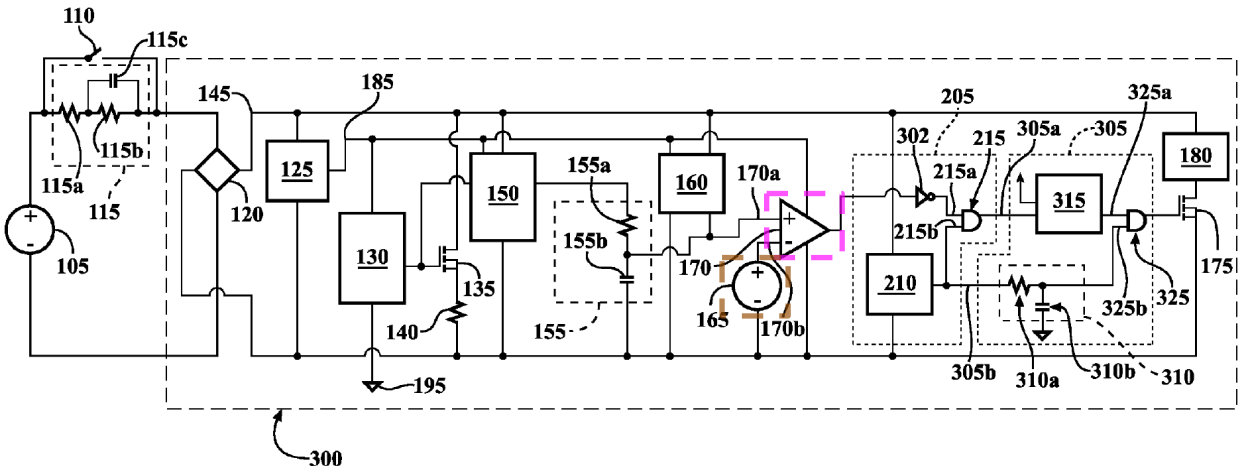

FIG. 3

Ivey345, Fig. 3 (annotated), ¶¶[0024]-[0026], [0010], [0028]-[0029], [0034]. Comparator 170's output ultimately determines whether load switch 175 is activated and thus whether current may flow from device power rail 145 through the LEDs. Ivey345, ¶¶[0030]-[0032], [0010], [0041], [0044]-[0045]. Specifically, comparator 170 compares detector 150's output signal to the output of "detection threshold signal source 165" (dotted-brown) and "produces an output relating to the comparison." Ivey345, ¶[0030]. If detector 150's output signal is lower than the threshold signal (fault configuration), then comparator 170 outputs a "low" signal that ultimately causes load switch 175 to "remain[] off." Ivey345, ¶¶[0030]-[0032], [0010], [0044]-[0045]. When oscillator 130's clock signal thereafter oscillates low, test load switch 135 likewise opens, thus opening device power rail 145. Ivey345, ¶¶[0020]-[0022], [0024].

(f) Limitation [1e]: when it is detected during one of the one or more pulse signals that the LED tube lamp is properly installed on the lamp socket, control the switch circuit to remain in a conducting state to cause the power loop of the LED tube lamp to maintain a conducting state,

66. By contrast, when detector 150 detects a decreased variation across device power rail 145 corresponding to a normal configuration, detector 150 outputs a correspondingly "increase[d]" signal to comparator 170. Ivey345, ¶¶[0024]-[0026], [0028]-[0029], [0010]. If detector 150's output signal is higher than the threshold signal (normal configuration), then comparator 170 outputs a "high" signal

that ultimately causes load switch 175 to remain powered on, allowing current to continue flowing through the LEDs. Ivey345, ¶¶[0030]-[0032], [0041], [0044]-[0045], [0010].

(g) Limitation [1f]: wherein the signal generated from the external driving signal is a sampling signal on the power loop, the installation detection circuit further comprises a detection determining circuit configured to detect the sampling signal for determining whether the LED tube lamp is properly installed on the lamp socket, and the power loop includes the switch circuit and the detection determining circuit, and

67. Detector 150, comparator 170, and Z test load 140 altogether form the claimed "detection determining circuit." *Compare* Ivey345, Fig. 3 (annotated below), *with, e.g.*, '140 Patent, Fig. 15K, 49:63-50:47.

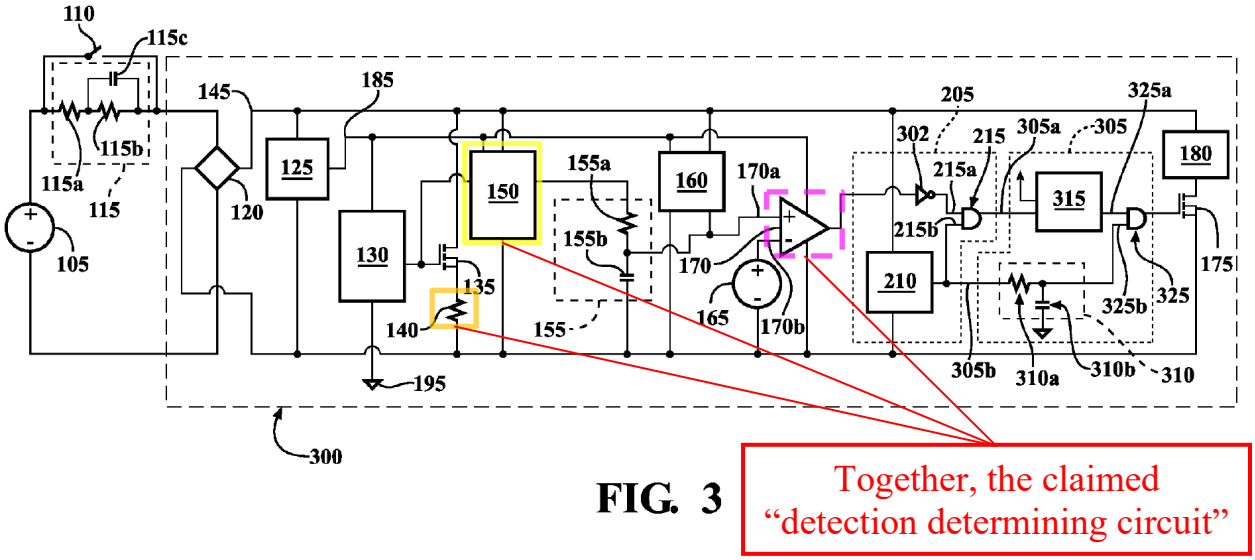

FIG. 3

Specifically, synchronously with oscillator 130's clock signal, detector 150 detects a variation across device power rail 145—namely "a change of voltage of, or current through, the device power rail 145 and/or the Z test load 140" ("signal generated

from the external driving signal is a sampling signal on the power loop"). Ivey345, ¶¶[0024], [0026]-[0027].

68. Based on the detected variation, detector 150 outputs a corresponding detection signal to comparator 170, which compares the detection signal to the threshold signal to detect whether a fault configuration exists. Ivey345, ¶¶[0024]-[0032], [0010].

69. Lastly, during operation, current flows from device power rail 145 through test load switch 135, load switch 175, and Z test load 140 ("the power loop includes the switch circuit and the detection determining circuit"). Ivey345, ¶¶[0021]-[0027], [0010], [0035]-[0036], [0045].

(h) Limitation [1g]: wherein the pulse generating circuit is configured to output one or more pulse signals independent of whether the detection determining circuit detects the sampling signal.

70. Oscillator 130's sole input is power from "auxiliary power supply 125," which simply receives DC power from rectifier 120. Ivey345, ¶¶[0016], [0019]. Thus, oscillator 130 receives no input from, and therefore operates independently as claimed from, the current limiting circuit's downstream operations. Indeed, Ivey345 teaches that oscillator 130 may be "a ring oscillator," which operates simply via a DC input and thus generates an oscillating output independently from downstream devices that receive the oscillating output. *See* Ivey345, ¶[0019]; Mandal, 1-3.

(i) Limitation [3a]: The installation detection circuit according to claim 4, configured such that when the detection determining circuit determines that the sampling signal is greater than or equal to a predefined signal, it is detected that the LED tube lamp is properly installed on the lamp socket; and

71. A normal configuration is detected when detector 150 detects a decreased variation across device power rail 145 and outputs a correspondingly increased signal to comparator 170, which determines that detector 150's output is higher than the threshold signal ("sampling signal is greater than or equal to a predefined signal"). Ivey345, ¶¶[0024]-[0032], [0010].

(j) Limitation [3b]: when the detection determining circuit determines that the sampling signal is smaller than a predefined signal, it is detected that the LED tube lamp is not properly installed on the lamp socket.

72. A fault configuration is detected when detector 150 detects an increased variation across device power rail 145 and outputs a correspondingly decreased signal to comparator 170, which determines that detector 150's output is lower than the threshold signal ("sampling signal is smaller than a predefined signal"). Ivey345, ¶¶[0024]-[0032], [0010].

(k) Limitation [4pre]: An installation detection circuit configured in a light-emitting diode (LED) tube lamp configured to receive an external driving signal,

73. To the extent claim 4's preamble is limiting, the Ivey Combination meets it. *See* Sections VIII.A.5(a), VIII.A.5(l)-VIII.A.5(m).

(l) Limitations [4a]-[4f]: the installation detection circuit comprising:
a pulse generating circuit configured to output one or more pulse signals;
wherein the installation detection circuit is configured to detect during at least one of the one or more pulse signals whether the LED tube lamp is properly installed on a lamp socket, based on detecting a signal generated from the external driving signal; and
a switch circuit coupled to the pulse generating circuit, wherein the one or more pulse signals control turning on and off of the switch circuit;
wherein the installation detection circuit is further configured to:
when it is detected during one of the one or more pulse signals that the LED tube lamp is not properly installed on the lamp socket, control the switch circuit to remain in an off state to cause a power loop of the LED tube lamp to be open; and
when it is detected during one of the one or more pulse signals that the LED tube lamp is properly installed on the lamp socket, control the switch circuit to remain in a conducting state to cause the power loop of the LED tube lamp to maintain a conducting state, and
wherein the signal generated from the external driving signal is a sampling signal on the power loop, the installation detection circuit further comprises a detection determining circuit configured to detect the sampling signal for determining whether the LED tube lamp is properly installed on the lamp socket, and the power loop includes the switch circuit and the detection determining circuit; and

74. *See* Sections VIII.A.5(b)-VIII.A.5(g).

(m) Limitation [4g]: wherein the installation detection circuit further includes a detection result latching circuit coupled to the switch circuit, wherein the detection result latching circuit is configured to receive the one or more pulse signals to control turning on and

off of the switch circuit based on a detection result signal from the detection determining circuit.

75. Comparator 170's output does not go directly to load switch 175, but is instead inverted by "logic inverter 302" and then inputted into "main load shut-off latch 315" (together in dotted-orange), which "may be constructed from an electrical flip-flop" and has its output connected to load switch 175's input:

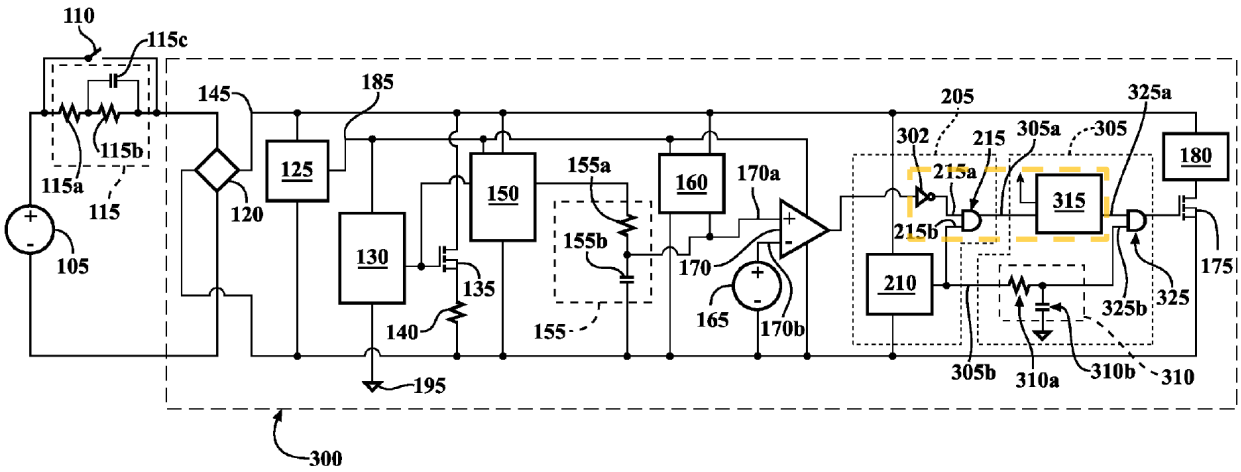

FIG. 3

Ivey345, Fig. 3 (annotated) ¶¶[0039]-[0041], [0043], [0045]-[0046]. Logic inverter 302 and latch 315 altogether form the claimed "detection result latching circuit." *see also* '140 Patent, 9:28-51. Though not depicted, latch 315 receives—and thus synchronizes its operation with—oscillator 130's clock signal ("the detection result latching circuit is configured to receive the one or more pulse signals"). Ivey345, ¶¶[0043]-[0045]. During such synchronized operation, latch 315 also receives the inverted comparator output to control whether latch 315 should latch a "high" or

"low" output to control turning on or off load switch 175. Ivey345, ¶¶[0043]-[0046], [0030]-[0032]; '140 Patent, 38:58-62; Section VII.B.3.

76. Alternatively, should the *CH* Court's construction of "detection result latching circuit" apply (*see* EX1026, 6; Section VII.B.3), Ivey345 teaches more specifically that latch 315 receives oscillator 130's clock signal either directly from oscillator 130 or indirectly via another synchronized device, e.g., "detection validation timer 210." Ivey345, ¶¶[0043], [0039]. In other words, Ivey345 teaches that oscillator 130's clock signal is outputted to each synchronized device either individually using parallel interconnections or serially using "daisy chaining"—a commonly used circuit design technique for synchronizing devices where a first device (e.g., timer 210) receives the clock signal and outputs the clock signal to a second device (e.g., latch 315), which may do the same to a third device, and so forth to establish a serial daisy chain cascade that synchronizes each connected device. Ivey345, ¶¶[0043], [0039]; *see also, e.g.*, Pyeon, 5:36-56, Fig. 2. And as commonly known, daisy chaining provides numerous advantages over parallel interconnections, including "utilizing fewer and shorter interconnections [to] make[] the overall implementation less vulnerable to undesirable effects, such as propagation delay and crosstalk," thereby "allow[ing] the devices to be operated at higher speeds," while also "reduc[ing] complexity [to] enable[] a subsystem containing the devices to be implemented in a smaller area thus allowing the

subsystem to occupy a smaller footprint." Pyeon, 2:29-54. And tradeoffs with using daisy chaining instead of parallel interconnections can be easily mitigated. *E.g.*, Pyeon, 5:53-56 ("Note that the clock signal may incur a delay as it propagates through the daisy chain cascaded devices. An internal delay compensation circuit, such as a delay locked loop (DLL) circuit, may be employed to obviate this delay.").

77. To gain the advantages of daisy chaining, a POSITA would have recognized that, while oscillator 130's clock signal could be at least partially daisy chained as disclosed in Ivey345 by connecting oscillator 130 to timer 210 to latch 315 (Ivey345, ¶¶[0039], [0043]), a more preferable configuration would have been to fully daisy chain the devices to be synchronized—e.g., by then also connecting latch 315 to test load switch 135 to detector 150 (*see* Ivey345, ¶¶[0021], [0024], [0039], [0043])—to maximize such benefits. Doing so, latch 315 therefore receives and outputs oscillator 130's clock signal to test load switch 135. And when oscillator 130's clock signal oscillates high or low, this output from latch 315 to test load switch 135 would likewise be high or low, respectively. *See* EX1026, 6 ("outputs a high logic value when either… ***the pulse signal output terminal***… has a high logic value" (emphasis added)). At the same time, latch 315, as discussed, also receives the inverted comparator output to control whether latch 315 should latch a "high" or

"low" output to turn on or off load switch 175.[2] EX1026, 6 ("***stores the detected result*** and outputs a high logic value when either ***the stored detected result***… has a high logic value" (emphasis added)); Ivey345, ¶¶[0043]-[0046], [0030]-[0032].

(n) Limitation [21pre]: An installation detection circuit configured in a light-emitting diode (LED) tube lamp,

78. To the extent claim 21's preamble is limiting, the Ivey Combination meets it. *See* Sections VIII.A.5(a), VIII.A.5(o)-VIII.A.5(u).

(o) Limitation [21a]: the installation detection circuit comprising:
means for generating one or more pulse signals;

79. Oscillator 130 performs the claimed function in substantially the same way to produce substantially the same results as the '140 Patent's module 2540—a structure corresponding to the claimed "means for generating (Section VII.B.1)—because oscillator 130 similarly is specified as an empty box (*compare* Ivey345, Fig. 3, *with* '140 Patent, Fig. 15B), is nevertheless considered a "circuit" (*compare* Ivey345, ¶[0019], *with* '140 Patent, 39:10-25), and performs the identical function of "generating one or more pulse signals" as claimed by producing a clock signal

[2] Should a mapping of "switch circuit" be required here, load switch 175 and test load switch 135 would thus together form the "switch circuit" (and not load switch 175 alone). *See* Section VIII.A.5(d).

that oscillates high and low (*compare* Ivey345, ¶¶[0019]-[0020], *with* '140 Patent, 38:28-62). Oscillator 130 therefore meets the claimed "means for generating."

(p) Limitation [21b]: means for detecting during one or more pulse signals whether the LED tube lamp is properly installed on a lamp socket; and

80. Structures corresponding to the claimed "means for detecting" include the '140 Patent's module 2570. Section VII.B.2. Module 2570 is specified as an empty box, but it is nevertheless a "detection determining ***circuit***." '140 Patent, 38:39-44 (emphasis added), Fig. 15B.

81. As discussed in Section VIII.A.5(g), Ivey345's current limiting circuit includes detector 150, comparator 170, and Z test load 140, which altogether form a detection determining ***circuit***. Ivey345, ¶¶[0022]-[0023], [0029]. Such a circuit performs the claimed function in substantially the same way to produce substantially the same results as module 2570, because such a circuit detects, synchronously with oscillator 130's clock signal, a variation across device power rail 145 to detect whether a fault configuration exists, thus matching the construed function discussed in Section VII.B.2 of "detecting a sampling signal on the power loop during the one or more pulse signals for determining whether the LED tube lamp is properly installed." Ivey345, ¶¶[0024]-[0027], [0010]; Sections VIII.A.5(g), VIII.A.5(c)-VIII.A.5(e). The combined circuit of detector 150, comparator 170, and Z test load 140 oscillator 130 therefore meets the claimed "means for detecting."

(q) Limitation [21c]: a switch circuit coupled to the means for generating one or more pulse signals, wherein the one or more pulse signals control turning on and off of the switch circuit;

82. *See* Sections VIII.A.5(o), VIII.A.5(d).

(r) Limitation [21d]: wherein the installation detection circuit is further configured to:
when it is detected during one of the one or more pulse signals that the LED tube lamp is not properly installed on the lamp socket, control the switch circuit to remain in an off state to cause a power loop of the LED tube lamp to be open; and

83. *See* Section VIII.A.5(e).

(s) Limitation [21e]: when it is detected during one of the one or more pulse signals that the LED tube lamp is properly installed on the lamp socket, control the switch circuit to remain in a conducting state to cause the power loop of the LED tube lamp to maintain a conducting state,

84. *See* Section VIII.A.5(f).

(t) Limitation [21f]: wherein the means for detecting is configured to detect a sampling signal on the power loop for determining whether the LED tube lamp is properly installed on the lamp socket, and the power loop includes the switch circuit and the means for detecting, and

85. *See* Sections VIII.A.5(p), VIII.A.5(g).

(u) Limitation [21g]: wherein the LED tube lamp is configured to receive an external driving signal and comprises a rectifying circuit for rectifying the external driving signal and a filtering circuit coupled to the rectifying circuit, wherein the installation

detection circuit is coupled between the rectifying circuit and the filtering circuit.

86. Within the Ivey Combination, power converter 36 of Ivey813's LED-based light tube includes a rectifier circuit (Ivey345's rectifier 120), which rectifies mains AC power from "fixture 11" (Ivey345's "power source 105") to DC power, and Ivey345's current limiting circuit, which is powered by the rectifier circuit. Ivey813, 5:33-39; Ivey345, ¶¶[0012], [0015]-[0016]; Section VIII.A.4. Power converter 36, however, also includes numerous other circuits—particularly, "a current regulator circuit" that, as a POSITA would have recognized, includes a filtering circuit and is downstream from the current limiting circuit ("filtering circuit coupled to the rectifying circuit, wherein the installation detection circuit is coupled between the rectifying circuit and the filtering circuit"). *See* Ivey813, 5:33-35; Section VIII.A.4.

87. Specifically, a POSITA would have recognized power converter 36's current regulator circuit to be a "constant-current power suppl[y]"—also known as a "buck converter"—that regulates LED current to be constant such that light output is also constant. *See* Recom, 5-6 ("The majority of high power white LEDs are designed to be run at 350mA constant current… Most DC/DC constant current LED drivers are buck or step-down converters."); Guang, ¶¶[0011], [0017], [0020]; Esaki, 4:66-5:2, 5:33-35; Sadwick, ¶[0060]. Such current regulators operate on a wide input voltage range and output a constant current by utilizing an inductor and switch

in series with the LED load, where the switch is periodically opened and closed to charge and discharge the inductor at a specific frequency such that the output current to the LEDs is generally constant. Recom, 6; Guang, ¶[0061]; Esaki, 10:15-36; Sadwick, ¶[0124]. This periodic switching, however, also causes a "pulsation component (ripple)" to be outputted. Esaki, 5:50-57. To address this issue, a filter such as a "smoothing" capacitor is inserted afterwards to filter out the ripples and thus reduce flickering of the LEDs. Guang, ¶[0038]; Esaki, 5:50-57; Sadwick, ¶[0125]. Power converter 36's current regulator circuit therefore would have included—and a POSITA would have otherwise been motivated to ensure such included—a filter such as a smoothing capacitor.

88. Further, a POSITA would have also recognized the current regulator circuit to be downstream from Ivey345's current limiting circuit in the Ivey Combination—e.g., immediately before, or part of, main load 180. Specifically, Ivey345 teaches, when incorporating its current limiting circuit, to directly connect the current limiting circuit's output to "a power supply that connects directly to the main load 180"—e.g., power converter 36's current regulator circuit, which, as discussed, is a "constant-current ***power suppl***[***y***]." Ivey345, ¶[0011]; Ivey813, 5:33-39; Guang, ¶[0011] (emphasis added). Indeed, a POSITA would have known to place the current limiting circuit before and not after the current regulator circuit for operability, because, while the current regulator circuit operates on a "wide input

voltage range" and thus operates even when a fault configuration exists (*see* Recom, 6; Ivey813, 5:36-39; Ivey345, ¶[0010]), the current regulator circuit nevertheless outputs a constant, nonvarying current (*see* Recom, 5-6; Guang, ¶¶[0011], [0017], [0020]; Esaki, 4:66-5:2, 5:33-35; Sadwick, ¶[0060]), which, if inputted into the current limiting circuit, would prevent the detection of a fault configuration because there would be no detectable variation across device power rail 145 (*see* Ivey345, ¶¶[0024]-[0026], [0010]). Because the current regulator circuit is downstream from the current limiting circuit and contains a filtering circuit, the Ivey Combination therefore meets limitation [21g].

(v) Limitations [22a]-[22b]: The installation detection circuit according to claim 21, wherein when the means for detecting determines that the sampling signal is greater than or equal to a predefined signal, it is detected that the LED tube lamp is properly installed on the lamp socket; and
when the means for detecting determines that the sampling signal is smaller than a predefined signal, it is detected that the LED tube lamp is not properly installed on the lamp socket.

89. Ivey345's detector 150, comparator 170, and Z test load 140 together detect whether a fault configuration exists by detecting a variation across device power rail 145, generating a corresponding detection signal in response, and determining whether this detection signal is higher or lower than the threshold signal. Ivey345, ¶¶[0024]-[0032], [0010]; Sections VIII.A.5(i)-VIII.A.5(j).

(w) Claim 23: The installation detection circuit according to claim 21, further comprising a detection result latching circuit coupled to the switch circuit, wherein the detection result latching circuit is configured to receive the one or more pulse signals to control turning on and off of the switch circuit based on a detection result signal from the means for detecting.

90. ***See*** Sections VIII.A.5(p), VIII.A.5(m).

(x) Limitation [24pre]: A detection method adopted by a light-emitting device (LED) tube lamp for preventing a user from electric shock when the LED tube lamp is being installed on a lamp socket,

91. To the extent claim 24's preamble is limiting, the Ivey Combination meets it by utilizing, within "power converter 36" of Ivey813's "LED-based light tube," Ivey345's "current limiting circuit" to detect during relamping whether a subject user is making contact with the tube's return terminal while the tube's power terminal is connected to "fixture 11" and, if such occurs, to "maintain[] the current flowing through the subject at a low and safe level." Ivey813, 2:50-56, 5:33-35; Ivey345, ¶¶[0010], [0004]-[0005]; Section VIII.A.4; *see also* Sections VIII.A.5(y)-VIII.A.5(bb).

(y) Limitation [24a]: the detection method comprising: when at least one end of the LED tube lamp is installed on the lamp socket, generating one or more pulse signals by a pulse generating circuit, wherein the pulse generating circuit is configured in the LED tube lamp;

92. The current limiting circuit protects from the risk of shock when a fault configuration occurs. Ivey345, ¶¶[0005], [0013]. The current limiting circuit

includes oscillator 130 that, during operation, outputs an oscillating clock signal ("generating one or more pulse signals by a pulse generating circuit"). Ivey345, ¶[0019].

(z) Limitation [24b]: detecting a sampling signal on a power loop of the LED tube lamp by a detection determining circuit, to detect during the one or more pulse signals whether the other end of the LED tube lamp is properly installed on the lamp socket;

93. Also included are detector 150, comparator 170, and Z test load 140, which altogether form the claimed "detection determining circuit." Ivey345, ¶¶[0022]-[0023], [0029]; Section VIII.A.5(g).

94. Oscillator 130's output is connected to test load switch 135, which opens and closes when oscillator 130's clock signal oscillates low and high, respectively. Ivey345, ¶¶[0020]-[0022], [0024], Fig. 3; Section VIII.A.5(c). When test load switch 135 is closed accordingly, current flows from the tube's rectifier 120 and device power rail 145 through Z test load 140. Ivey345, ¶¶[0020]-[0024]; Section VIII.A.5(c). Then, synchronously with oscillator 130's clock signal, detector 150 detects a variation across device power rail 145 ("detecting a sampling signal on a power loop of the LED tube lamp by a detection determining circuit"). Ivey345, ¶¶[0024], [0026]-[0027]; Section VIII.A.5(c). Detector 150 then outputs a corresponding detection signal to comparator 170, which compares this signal to the

threshold signal to detect whether a fault configuration exists. Ivey345, ¶¶[0024]-[0032], [0010]; Sections VIII.A.5(e)-VIII.A.5(f).

(aa) Limitation [24c]: receiving the one or more pulse signals through a detection result latching circuit by a switch circuit, wherein the switch circuit is on the power loop; and

95. Comparator 170's output is inverted by logic inverter 302 and then inputted into latch 315. Ivey345, ¶¶[0038]-[0041], [0043]-[0045]. Logic inverter 302 and latch 315 together form the claimed "detection result latching circuit." Section VIII.A.5(m). Latch 315's output is connected to load switch 175's input (Ivey345, ¶¶[0043]-[0046]), which alone or together with test load switch 135 forms the claimed "switch circuit." Section VIII.A.5(d). Further, during operation, current flows from device power rail 145 through both test load switch 135 and load switch 175 ("switch circuit is on the power loop"). Ivey345, ¶¶[0021]-[0024], [0010], [0035]-[0036], [0045]; Section VIII.A.5(m); *see also* Section VIII.A.5(g).

96. Latch 315—which receives oscillator 130's clock signal and thus operates synchronously with test load switch 135's activation (Ivey345, ¶¶[0043], [0024])—latches either a "high" or "low" output to close or open load switch 175, respectively, depending on whether the inverted comparator output is "low" or "high" (Ivey345, ¶¶[0045]-[0046], [0030]-[0032]). Section VIII.A.5(m). Load switch 175 accordingly receives latch 315's output, which is generated based on oscillator 130's clock signal and the inverted comparator output, and thus, consistent

with Patent Owner's infringement contentions in the *Current* Action, load switch 175 receives oscillator 130's output through latch 315 ("receiving the one or more pulse signals through a detection result latching circuit by a switch circuit"). EX1034, 53 ("Switch circuit CP2 receives signal S4 output from the detection result latching circuit which is generated based on the [pulse signal] signal S5 and [detection result] S9."); EX1035, 57 (same).

97. Alternatively, should the *CH* Court's construction of "detection result latching circuit" be applied (*see* EX1026, 6; Section VII.B.3), a POSITA would have been motivated to daisy chain oscillator 130's output to, e.g., timer 210, latch 315, test load switch 135, and detector 150. Section VIII.A.5(m). Latch 315 would thus output a high or low logic value signal to test load switch 135 when oscillator 130's clock signal oscillates high or low, respectively, while at the same time latching either a "high" or "low" output to turn on or off load switch 175 based on the inverted comparator output, thereby meeting the "detection result latching circuit" as construed by the court. Section VIII.A.5(m).

(bb) Limitation [24d]: comparing the sampling signal with a predefined signal, wherein during the one or more pulse signals when the sampling signal is smaller than the predefined signal, the detection method further comprises:
controlling the switch circuit to remain in an off state

to cause the power loop of the LED tube lamp to be open.

98. When detector 150's output signal is lower than the threshold signal, comparator 170 outputs a "low" signal, which is inverted by logic inverter 302 and then sent to latch 315. Ivey345, ¶¶[0030]-[0032], [0038]-[0041], [0044]-[0045]. In response, latch 315 "latch[es] a low output," causing load switch 175 to "remain[] off," thereby preventing current from flowing from device power rail 145 through the LEDs. Ivey345, ¶¶[0044]-[0046], [0030]-[0032], [0010]. When oscillator 130's clock signal thereafter oscillates low, test load switch 135 likewise opens, causing device power rail 145 overall to be open ("controlling the switch circuit to remain in an off state to cause the power loop of the LED tube lamp to be open."). Ivey345, ¶¶[0020]-[0022], [0024], Fig. 3.

(cc) Limitations [25a]-[25c]: The detection method according to claim 24, wherein the step of controlling the switch circuit to remain in an off state to cause the power loop of the LED tube lamp to be open comprises:
outputting a first low level signal by the detection determining circuit;
receiving the first low level signal by the detection result latching circuit and outputting a second low level signal; and
receiving the second low level signal by the switch

circuit and maintaining an off state of the switch circuit to cause the power loop to be open.

99. *See* Section VIII.A.5(bb). Comparator 170's "low" output forms the claimed "first low level signal," and latch 315's "low" output forms the "second low level signal."

(dd) Claim 26: The detection method according to claim 24, wherein during any of the one or more pulse signals when the sampling signal is greater than or equal to the predefined signal, the detection method further comprises:
controlling the switch circuit to remain in a conducting state to cause the power loop of the LED tube lamp to maintain a conducting state.

100. By contrast, if comparator 170 determines that detector 150's output signal is higher than the threshold signal, then comparator 170 outputs a "high" signal, which is inverted by logic inverter 302 and then sent to latch 315. Ivey345, ¶¶[0030]-[0032], [0038]-[0041], [0044]-[0045]. In response, latch 315 continues in an "on" state and thus latches a "high" output, causing load switch 175 to remain powered on to maintain current flow from device power rail 145 through the LEDs. Ivey345, ¶¶[0044]-[0046], [0030]-[0032], [0010].

(ee) Limitations [27a]-[27c]: The detection method according to claim 26, wherein the step of controlling the switch circuit to remain in a conducting state to cause the power loop of the LED tube lamp to maintain a conducting state comprises:
outputting a first high level signal by the detection determining circuit;
receiving the first high level signal by the detection

result latching circuit and outputting a second high level signal; and
receiving the second high level signal by the switch circuit and conducting the switch circuit to cause the power loop to maintain a conducting state.

101. *See* Section VIII.A.5(dd). Comparator 170's "high" output forms the claimed "first high level signal," and latch 315's "high" output forms the "second high level signal."

(ff) Claim 28: The detection method according to claim 24, wherein a period of each of the one or more pulse signals is between 10 microseconds and 1 millisecond.

102. Oscillator 130 outputs an oscillating signal with frequency "for example at or about 1Khz" ("period… between 10 microseconds and 1 millisecond"). Ivey345, ¶¶[0019]-[0020].

(gg) Limitations [30a]-[30b]: The installation detection circuit according to claim 4, configured such that when the detection determining circuit determines that the sampling signal is greater than or equal to a predefined signal, it is detected that the LED tube lamp is properly installed on the lamp socket; and
when the detection determining circuit determines that the sampling signal is smaller than a predefined signal, it is detected that the LED tube lamp is not properly installed on the lamp socket.

103. *See* Sections VIII.A.5(i)-VIII.A.5(j).

(hh) Claim 31: The installation detection circuit according to claim 1, further comprising a detection result latching circuit coupled to the switch circuit, wherein the detection result latching circuit is configured to receive the one or more pulse signals to control turning

on and off of the switch circuit based on a detection result signal from the detection determining circuit.

104. *See* Section VIII.A.5(m).

(ii) Claim 35: The installation detection circuit according to claim 1, wherein a period of each of the one or more pulse signals is between 1 microsecond and 1 millisecond.

105. *See* Section VIII.A.5(ff).

B. Ground 2: Ivey813, Ivey345, and Sadwick, and Claims 1, 3-4, 21-28, 30-31, and 35

106. Ground 2 addresses the potential argument that ground 1 fails because Ivey345's test load switch 135 and Z test load 140 are in parallel, not series, with main load 180 (LEDs).

1. Sadwick

107. Sadwick is directed to a "fluorescent lamp replacement" ("FLR") for replacing "[c]onventional fluorescent tubes." Sadwick, ¶¶[0004], [0066], [0001]. The FLR includes "a rectification stage" that "accepts either an AC lines input"—i.e., the FLR is a type B LED light tube that accepts a standard "100 to 300 VAC 50 Hz or 60 Hz AC line input"—"or a ballast output." Sadwick, ¶¶[0066], [0173], [0161]; '140 Patent, 4:1-11; Premier, 3-4. The FLR also includes a "light source" such as one such "made up of LEDs." Sadwick, ¶[0066].

108. Sadwick notes that, "when the fluorescent lamp replacement is being installed, [a] pin can be exposed and, without protection mechanisms, can shock and

injure a user contacting the pin and appearing as an abnormal ground through which an electrical current can flow." Sadwick, ¶[0071] (diagram numbering omitted). To address this "fault hazard condition," Sadwick's FLR "provid[es] shock hazard protection against inadvertent contact with exposed pin(s)." Sadwick, ¶¶[0082], [0073]. Sadwick's Figure 14 depicts such "hazard protection circuitry":

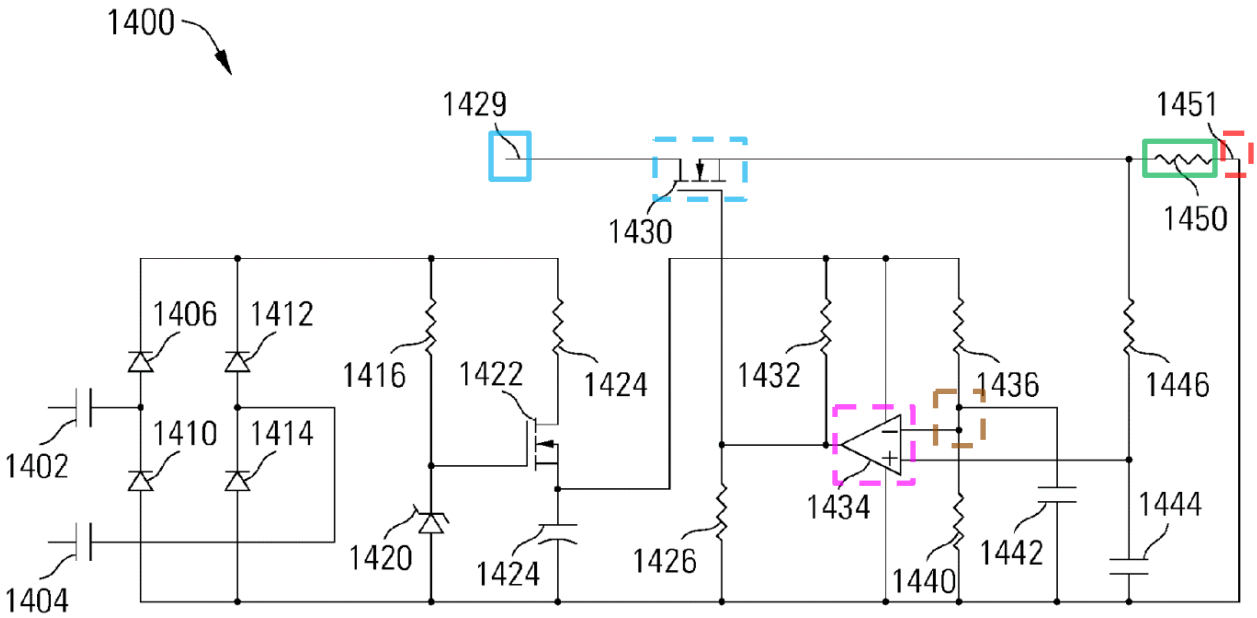

FIG. 14

Sadwick, ¶¶[0080], [0082], Fig. 14 (annotated). As shown, an "input rectification stage of the FLR" is connected to node 1429 (solid-blue). Sadwick, ¶[0080]. The "LED (or OLED or QD) load of the FLR" is connected to node 1451 (dotted-red). Sadwick, ¶[0080]. Between these nodes is "[t]ransistor/switch 1430" (dotted-blue) and "sense resistor 1450" (solid-green), which are thus "in series with" the FLR's rectifier and LED load. Sadwick, ¶[0080].

109. Sadwick's hazard protection circuitry detects whether the fault hazard condition above is present by feeding "the voltage across sense resistor 1450" into "the non-inverting input of [a] comparator 1434" (dotted-pink). Sadwick, ¶[0080]. At the same time, "a reference set point" (dotted-brown) "is fed to the inverting terminal of [the] comparator 1434 such that when the signal from the sense resistor 1450 is larger than the reference set point signal, the comparator 1434 goes high and turns on transistor 1430" and thus "current/voltage is allowed to flow to the LED or OLED or QD load." Sadwick, ¶[0080]. By contrast, "[i]f the current through the sense resistor 14[5]0 produces too small of a voltage then transistor 1430 is turned off preventing current from flowing and thus limiting and preventing a hazard/shock/leakage current condition from occurring." Sadwick, ¶¶[0080], [0082].

110. Once transistor 1430 is turned off, Sadwick's hazard protection circuitry "allow[s] for diverse possible responses," including causing transistor 1430 to be "complete[ly] turn[ed]-off (i.e., latch[ed] off) until power is cycled (i.e., turned off and then turned back on) or, as another example, periodically turned back on for a brief moment to see if the hazard fault condition had cleared (i.e., the FLR had been correctly plugged into the ballast)." Sadwick, ¶[0082].

2. Rationale to Combine the Ivey Combination with Sadwick

111. First, Sadwick evidences that a POSITA would have found modifying the Ivey Combination, specifically such that Ivey345's Z test load 140 is configured in series with the LEDs to eliminate the need for test load switch 135 and to use load switch 175 instead to periodically permit current to flow from rectifier 120 through the Z test load 140 to be detected by detector 150, to be a modification that amounts to a mere selection between a limited number of known solutions to the same problem.

112. Sadwick, like the Ivey Combination, is directed to a fluorescent-replacing LED-based light tube that may be mains line powered. *Compare* Sadwick, ¶¶[0004], [0173], *with* Ivey813, 2:11-13, 2:51-56, *and* Section VIII.A.4. Sadwick's FLR utilizes "hazard protection circuitry" that, like Ivey345's "current limiting circuit" in the Ivey Combination, protects against the fault configuration also identified in Ivey345—that a user may be electrically shocked during relamping if the user makes contact with an "exposed pin" on one end of the FLR while the other is connected. *Compare* Sadwick, ¶¶[0082], [0071], Fig. 8, *with* Ivey345, ¶¶[0010], [0005], *and* Section VIII.A.4. And Sadwick's hazard protection circuitry does so by utilizing the same core circuit components configured in a nearly identical layout as Ivey345's current limiting circuit.

113. Specifically, in both circuits, current periodically flows[3] from a line-powered LED-based light tube's rectifier[4] through a test resistor.[5] The voltage across the test resistor represents the current exiting the rectifier, which varies depending on whether a fault configuration exists.[6] To detect such a fault configuration, the test resistor's voltage is fed into the non-inverting input of a comparator.[7] At the same time, a reference voltage is fed into the comparator's inverting input.[8] The comparator then compares the voltages such that when the test resistor's voltage is respectively lower/higher than the reference voltage, a fault

---

[3] *Compare* Sadwick, ¶[0082] *with* Ivey345, ¶[0021].

[4] *Compare* Sadwick, ¶[0080] (discussing an "input rectification stage"), *with* Ivey813, 5:36-39 (discussing "a rectifier circuit"), Ivey345, ¶¶[0015]-[0016] (discussing "rectifier 120"), *and* Section VIII.A.4.

[5] *Compare* Sadwick, ¶[0080] ("sense resistor 1450"), *with* Ivey345, ¶¶[0023]-[0027] ("Z test load 140").

[6] *Compare* Sadwick, ¶¶[0080], [0082], *with* Ivey345, ¶¶[0010], [0024]-[0027].

[7] *Compare* Sadwick, ¶[0080] ("comparator 1434"), *with* Ivey345, ¶¶[0024]-[0029] ("comparator 170"), Fig. 3.

[8] *Compare* Sadwick, ¶[0080] ("reference set point signal"), *with* Ivey345, ¶¶[0030]-[0032] ("detection threshold signal"), Fig. 3.

configuration is/is not detected by the comparator, which in response outputs a signal to open/close a transistor in series with the rectifier and LEDs.[9] Further, the detection of a fault configuration may also cause this transistor to be latched open until power is cycled.[10]

114. The main difference between the two circuits is the placement of each's test resistor. Specifically, Sadwick's hazard protection circuit configures its test resistor (sense resistor 1450) "in series with" the LEDs, thereby allowing a single transistor 1430 (also "in series with" the LEDs) to be used for both (1) permitting current to flow periodically from the rectifier through sense resistor 1450 to determine whether a fault configuration exists, and (2) respectively disabling/maintaining current flow through the LEDs when the fault configuration is/is not detected. Sadwick, ¶¶[0080], [0082]. By contrast, Ivey345's current limiting circuit in the Ivey Combination configures its test resistor (Z test load 140)

---

[9] *Compare* Sadwick, ¶¶[0080], [0082], *with* Ivey345, ¶¶[0030]-[0032], [0010].

[10] *Compare* Sadwick, ¶[0082] (transistor 1430 may be "complete[ly] turn[ed]-off (i.e., latch[ed] off) until power is cycled (i.e., turned off and then turned back on)"), *with* Ivey345, ¶[0044] ("main load shut-off latch 315 will be triggered and produce an output that will prevent both present and future activation of the load switch 175" until "power is removed from the circuit and reapplied").

in parallel to main load 180 (LEDs), thereby requiring the use of two separate switches for controlling current flow in accordance with the above: (1) test load switch 135 (also parallel to the LEDs) permits current to flow periodically from rectifier 120 through Z test load 140, while (2) load switch 175 (in series with the LEDs) disables/maintains current flow through the LEDs. Ivey345, ¶¶[0021]-[0024], [0010], [0041]-[0045], Fig. 3; Section VIII.A.4. But the above illustrates the two and only two fundamental configurations that such a test resistor can be placed in relation to the LEDs: series or parallel. Indeed, that circuit components are configured either in series or parallel with one another is a core and known concept in electronics. Physics-Classroom.

115. Accordingly, Sadwick and Ivey345 together identify a limited number of solutions to choose from (i.e., two protection circuit layouts utilizing a test resistor configured either in series or parallel with the LEDs) that solve the same problem in line-powered LED-based light tubes (i.e., to protect a user from being shocked during relamping when accidentally touching an exposed pin), and a POSITA would have therefore found modifying Ivey345's current limiting circuit in the Ivey Combination to be in accordance with Sadwick's hazard protection circuitry (i.e., to configure Z test load 140 in series with the LEDs and to eliminate test load switch 135, as load switch 175 would be used instead for controlling current flow from rectifier 120 through Z test load 140 and the LEDs in accordance with the above) to

amount to merely selecting and pursuing one of two such solutions. Sadwick, ¶¶[0080], [0082]; Ivey345, ¶¶[0021]-[0024], [0010], [0035]-[0036], [0045].

116. Second, as explained above, Sadwick's resistor-in-series protection circuit explicitly addresses the same problem addressed in Ivey345—a user accidentally being shocked during relamping (Sadwick, ¶¶[0082], [0071]; Ivey345, ¶¶[0010], [0005])—and a resistor-in-series configuration was therefore a known and suitable technique for addressing that problem. Given the application of Sadwick's resistor-in-series technique to Ivey345's protection circuit was not beyond a POSITA's skill (*see, e.g.*, Sadwick, ¶¶[0080], [0082]), this alone would have motivated a POSITA to combine the Ivey Combination with Sadwick.

117. A POSITA would have also been motivated to combine the Ivey Combination with Sadwick because doing so would have (third) simplified Ivey345's current limiting circuit and, independently, would have (fourth) improved performance. With respect to simplification, performing the above modification would have allowed various components to be deleted, thereby simplifying the circuit. Even the deletion of a single component at the design phase creates a cascading effect that produces a significant number of downstream benefits, including reduced cost for parts, simpler assembly, reduced die size, improved yield, lower costs for consumers, and increased product long-term reliability due to less parts that could possibly fail. Such benefits are particularly impactful in products

such as LED tube lamps that are mass produced in extremely large quantities, and thus provide a strong motivation for modification. And in this instance, a POSITA would have recognized that modifying Ivey345's current limiting circuit in accordance with Sadwick would have allowed a switch to be deleted—specifically test load switch 135—because load switch 175 would have been used instead to control current flow through Z test load 140 and the LEDs as discussed above. *See* Ivey345, ¶¶[0021]-[0024], [0010], [0035]-[0036], [0045]; Sadwick, ¶¶[0080], [0082].

118. And with test load switch 135 deleted, so too could Ivey345's "power-up reset 160." *See* Ivey345, ¶¶[0033]-[0034], Fig. 3. That power-up reset 160, "[w]hen power is first applied to the current limiting circuit 100,… turn[s] off main load switch 175… [and] maintains this state until a stable condition is reached and a determination can be made whether a subject is present in the circuit." Ivey345, ¶[0034]. In other words, power-up reset 160 ensures that load switch 175 remains off until the signal from detector 150, driven by test load switch 135 (*see* Ivey345, ¶[0024]), permits detection of a human in the circuit (Ivey345, ¶[0034]). But with one transistor in the Ivey-Sadwick combination—load switch 175—for performing both the load-control and human-detection functions, there would have been no need for power-up reset 160 to control a non-existent additional transistor.

119. Further, the above modification would have also allowed a resistor to be deleted. Specifically, although the above modification would have resulted in Z test load 140—which is simply "a resistor" (Ivey345, Fig. 3, ¶[0080])—being configured in series with the LEDs rather than parallel (*see* Sadwick, ¶¶[0080], [0082]), such a modification would not have required placing an additional resistor in series with the LEDs, because a resistor in series with the LEDs would have already existed. As generally known, LEDs must have what is known as a "current limiting resistor" placed in series, because LEDs will otherwise burn out if directly connected to a power source. Parks; Guang, ¶[0011]. Given that such a current limiting resistor would have thus already existed in series with the LEDs in Ivey345's current limiting circuit, a POSITA would have recognized to use such a preexisting resistor as—and for carrying out the functions of—Z test load 140 when making the above modification, rather than adding a superfluous resistor in series with the LEDs for serving this same purpose. *see also* Etkina, 3 (demonstrating that current through an LED can be determined by measuring voltage across the LED's current limiting resistor, which has a known resistance); Guang, ¶[0035] (same).

120. Independently, the above modification would have improved performance. Specifically, a POSITA would have recognized that, unlike in the parallel configuration, configuring Z test load 140 in series with the LEDs would have caused the current flowing through Z test load 140 to exactly equal the current

flowing from rectifier 120 through the LEDs (which do not always perform as expected due to, e.g., environment and age) and more accurately represent whether a subject is present in the circuit. *See* Briggs, 3:36-44 ("[T]here are uncertainties within the forward voltages of the LEDs, which in turn creates uncertainty with respect to the current level flowing through the LEDs. To manage these uncertainties, the current flowing through the LEDs is measured by determining a voltage level across a known resistor and calculating the current level."), 3:51-55 ("As shown, the circuit of FIG. 1 comprises a plurality of LEDs coupled in series with a channel control transistor and a current sense circuit between a supply voltage V_{DD} and a reference ground." (diagram numbering omitted)). Such a modification would have thus increased the current limiting circuit's detection accuracy of a fault configuration and therefore improved performance, motivating a POSITA to perform the modification.

3. The Resulting "Ivey-Sadwick Combination"

121. So modified, Ivey345's current limiting circuit in the Ivey Combination (*see* Section VIII.A.4) is modified to be in accordance with Sadwick (the "Ivey-Sadwick Combination") such that Z test load 140 is configured "in series with" rectifier 120 and the LEDs (*see* Sadwick, ¶[0080]; Ivey345, ¶¶[0023]-[0024]). Ivey345's Figure 3, modified below, illustrates the Ivey-Sadwick Combination:

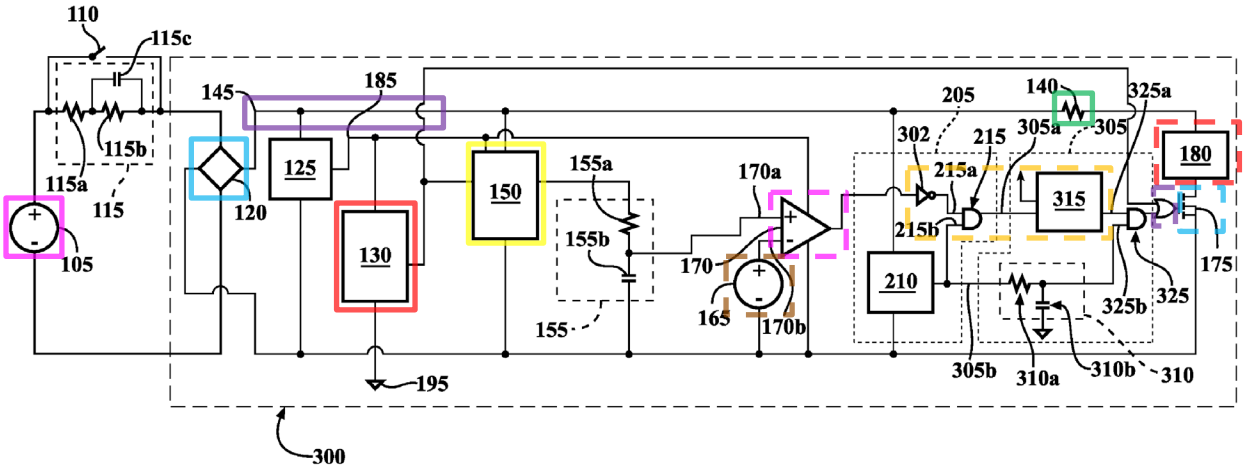

Ivey345, Fig. 3 (modified, annotated). As shown, test load switch 135 is eliminated, as load switch 175 (dotted-blue) instead performs test load switch 135's function of periodically permitting current to flow from rectifier 120 (solid-blue) and device power rail 145 (solid-purple) through Z test load 140 (solid-green), in addition to load switch 175's original function of respectively disabling/maintaining current flow through main load 180 (LEDs) (dotted-red) when a fault configuration is/is not detected. *See* Sadwick, ¶¶[0080], [0082]; Ivey345, ¶¶[0021]-[0024], [0010], [0035]-[0037], [0045]. As such, the output of oscillator 130 (solid-red) is connected to and controls load switch 175 rather than test load switch 135. *See* Sadwick, ¶¶[0080], [0082]; Ivey345, ¶[0021]-[0024], [0010], [0035]-[0036], [0045]. Likewise, power-up reset 160 is also eliminated. *See* Ivey345, ¶¶[0033]-[0034].

122. The current limiting circuit's remaining operations are unchanged. Specifically, detector 150 (solid-yellow) synchronously detects a variation across device power rail 145, and comparator 170 (dotted-pink) compares detector 150's

detection result to detector threshold signal source 165's (dotted-brown) signal to detect whether a fault configuration exists. *See* Sadwick, ¶¶[0080], [0082]; Ivey345, ¶¶[0023]-[0032], [0034]-[0035], [0010]. Respectively, if a fault configuration is/is not detected, comparator 170 outputs a "low"/"high" signal to logic inverter 302 and latch 315 (together in dotted-orange), and latch 315 in response outputs a "low"/"high" signal to load switch 175 to disable/maintain current flow through the LEDs. *See* Sadwick, ¶¶[0080], [0082]; Ivey345, ¶¶[0034]-[0035], [0010], [0044]-[0046].

123. Load switch 175 therefore closes when latch 315's output is high, oscillator 130's output is high, or both, and opens otherwise. Ivey345, ¶¶[0035]-[0036], [0045]-[0046], [0020]-[0022], [0024], [0010]; Sadwick, ¶[0082]. To enable such logical control of load switch 315, a POSITA would have recognized that the standard practice would have been to place a logical OR gate (dotted-purple) at load switch 175's gate for receiving both latch 315's output and oscillator 130's output.[11]

[11] Should there be an argument that placing this OR gate negates the circuit layout simplification benefits discussed in Section VIII.B.2, a POSITA would have recognized that deleting three components from Ivey345's circuit (a switch, resistor, and power-up reset) outweighs adding one component (an OR gate) and results in a net simplification.

See Nave-1; *see also* Sadwick, ¶[0212] ("In addition, logic, including digital and Boolean logic such as AND, NOT (inverter), OR, Exclusive OR gates, etc. … can also be used either alone or in combinations including analog and digital combinations for the present invention."); Ivey345, ¶[0046] ("The main load detection logic circuit 325 may be configured to include an AND gate, an NAND gate, a combination of logic gates, or a combination of discrete circuit elements.").

4. Element-by-Element Analysis

(a) Limitation [1pre]: An installation detection circuit configured in a light-emitting diode (LED) tube lamp configured to receive an external driving signal,

124. To the extent claim 1's preamble is limiting, the Ivey-Sadwick Combination meets it by utilizing Ivey345's "current limiting circuit" as modified in accordance with Sadwick ("installation detection circuit") within "power converter 36" of Ivey813's "LED-based light tube." Ivey813, 5:33-35; Ivey345, ¶[0010]; Sadwick, ¶[0080]; Section VIII.B.3; *see also* Sections VIII.B.4(b)-VIII.B.4(h).

125. Further, the tube receives AC power from "fixture 11" (Ivey345's "power source 105" (solid-pink)) and, using power converter 36's "rectifier circuit (Ivey345's "rectifier 120" (solid-blue)), rectifies such to DC power for use by the current limiting circuit:

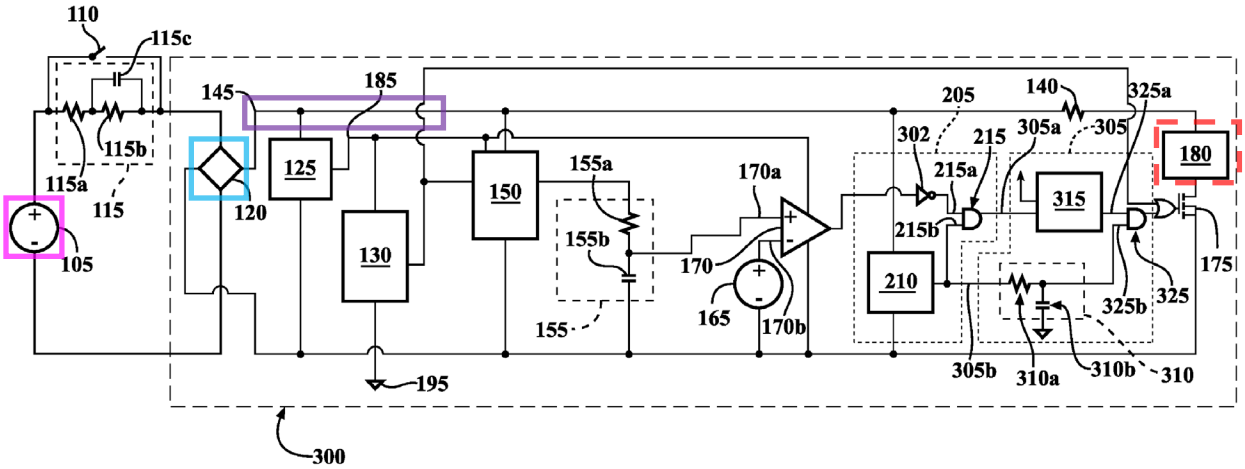

Ivey813, 2:51-56, 5:33-35; Ivey345, Fig. 3 (modified, annotated), ¶¶[0012], [0015]-[0016]; Sadwick, ¶[0080]; Section VIII.B.3. This DC power is provided to "LEDs 18" (Ivey345's "main load 180" (dotted-red)) from the rectifier device (via Ivey345's "device power rail 145" (solid-purple)). Ivey813, 5:33-35; Ivey345, ¶¶[0016], [0037]; Sadwick, ¶[0080]; Section VIII.B.3.

(b) Limitation [1a]: the installation detection circuit comprising:
a pulse generating circuit configured to output one or more pulse signals;

126. *See* Sections VIII.A.5(b), VIII.B.3.

(c) Limitation [1b]: wherein the installation detection circuit is configured to detect during at least one of the one or more pulse signals whether the LED tube lamp is properly installed on a lamp socket, based on detecting a signal generated from the external driving signal; and

127. *See* Section VIII.A.5(c). Differently here, the output of oscillator 130 (solid-red) is fed into an OR gate (dotted-purple) at the gate of load switch 175

(dotted-blue), which therefore opens and closes at least when oscillator 130's clock signal oscillates low and high, respectively:

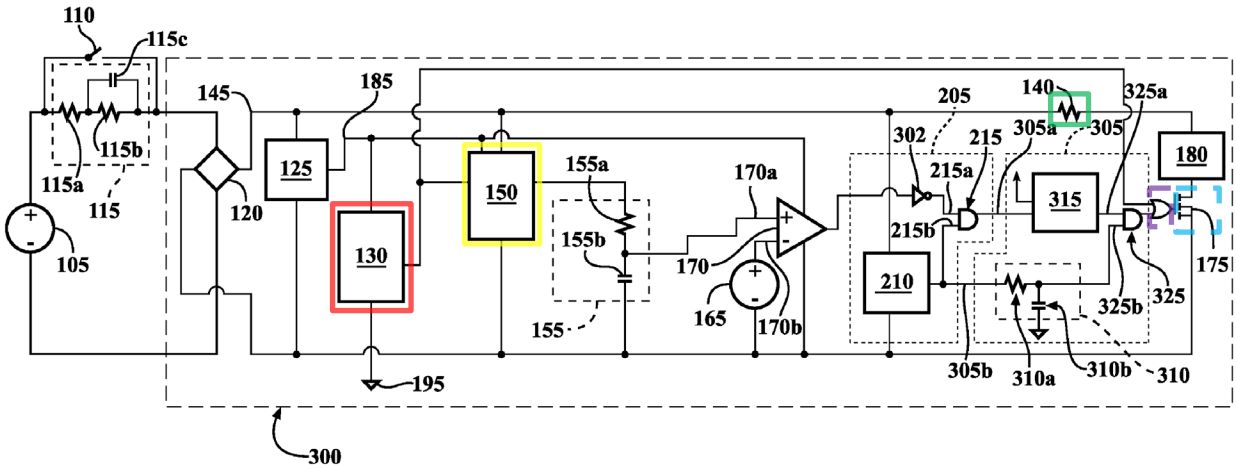

Ivey345, Fig. 3 (modified, annotated), ¶¶[0020]-[0022], [0024], [0035]-[0036], [0045]; Sadwick, ¶¶[0080], [0082]; Section VIII.B.3.

128. Further, in the Ivey-Sadwick Combination, Z test load 140 (solid-green) is instead configured in series with device power rail 145 and the LEDs. Ivey345, ¶[0023]; Sadwick, ¶[0080]; Section VIII.B.3. Thus, when load switch 175 is closed by oscillator 130's high output accordingly, current flows through Z test load 140. Ivey345, ¶¶[0020]-[0024], [0035]-[0036], [0045]; Sadwick, ¶¶[0080], [0082]; Section VIII.B.3. Detector 150 (solid-yellow), which also receives oscillator 130's output and thus operates synchronously with load switch 175's activation, detects a variation in the current draw or voltage across the device power rail 145, which is used to detect whether a fault configuration exists. Ivey345, ¶¶[0024],

[0026]-[0027], [0010], [0035]-[0036], [0045]; Sadwick, ¶¶[0080], [0082]; Section VIII.B.3.

(d) Limitation [1c]: a switch circuit coupled to the pulse generating circuit, wherein the one or more pulse signals control turning on and off of the switch circuit;

129. *See* Section VIII.A.5(d). Differently here, because test load switch 135 is deleted, load switch 175 alone forms the claimed "switch circuit." Section VIII.B.3. Load switch 175 receives oscillator 130's output via the OR gate ("coupled to the pulse generating circuit"), causing load switch 175 to open and close at least when oscillator 130's output oscillates low and high, respectively. Ivey345, ¶¶[0020]-[0024], [0035]-[0036], [0045]; Sadwick, ¶¶[0080], [0082]; Section VIII.B.3.

(e) Limitation [1d]: wherein the installation detection circuit is further configured to:
when it is detected during one of the one or more pulse signals that the LED tube lamp is not properly installed on the lamp socket, control the switch circuit to remain in an off state to cause a power loop of the LED tube lamp to be open; and

130. *See* Section VIII.A.5(e). Here, although Z test load 140 is configured in series with device power rail 145 and the LEDs, the discussed functions of detector 150, comparator 170 (dotted-pink), and detection threshold signal source 165 (dotted-brown) remain unchanged—in a fault configuration, detector 150 detects an increased variation across device power rail 145 and outputs a

"decrease[d]" signal to comparator 170, which determines that detector 150's output is lower than detection threshold signal source 165's signal and, in response, outputs a "low" signal to ultimately cause load switch 175 to "remain[] off":

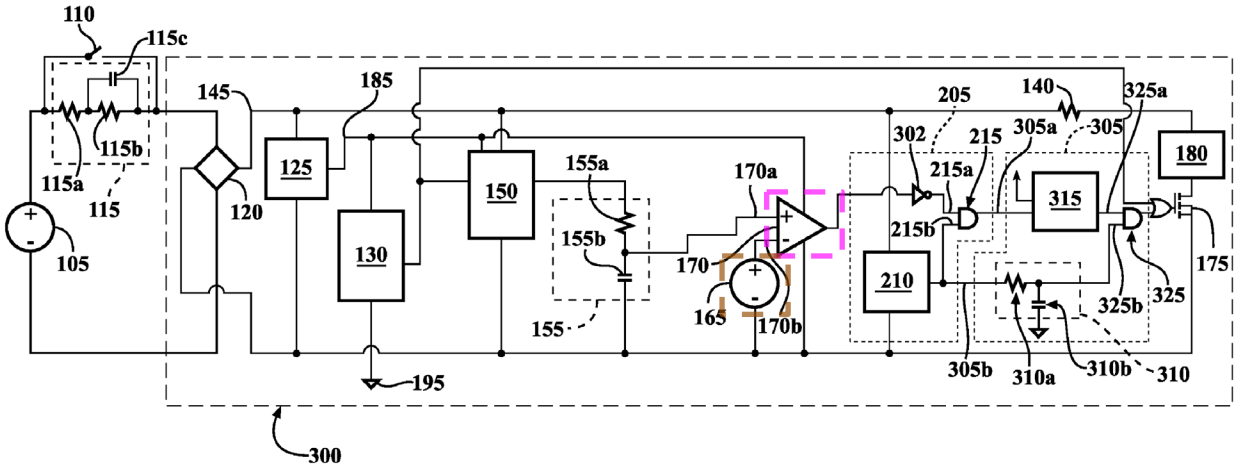

Ivey345, Fig. 3 (modified, annotated), ¶¶[0024]-[0026], [0010], [0018]-[0032], [0044]-[0045]; Sadwick, ¶¶[0080], [0082]; Section VIII.B.3. Differently here, however, load switch 175 also receives oscillator 130's clock signal via the OR gate. Section VIII.B.3. Thus, when comparator 170 outputs a "low" signal as discussed, and when oscillator 130's clock signal thereafter oscillates low, load switch 175 is opened, causing device power rail 145 overall to remain open. Ivey345, ¶¶[0020]-[0022], [0024]-[0026], [0010], [0018]-[0032], [0044]-[0045]; Sadwick, ¶¶[0080], [0082]; Section VIII.B.3.

(f) Limitation [1e]: when it is detected during one of the one or more pulse signals that the LED tube lamp is properly installed on the lamp socket, control the switch circuit to remain in a conducting state to cause

the power loop of the LED tube lamp to maintain a conducting state,

131. By contrast, in a normal configuration, detector 150 detects a decreased variation across device power rail 145 and outputs an "increase[d]" signal to comparator 170, ultimately powering on load switch 175. Ivey345, ¶¶[0024]-[0026], [0028]-[0032], [0010], [0044]-[0045]; Sadwick, ¶¶[0080], [0082]. . Ivey345, ¶¶[0030]-[0032], [0041], , [0010]; Sadwick, ¶¶[0080], [0082]; Sections VIII.B.3, VIII.A.5(f).

(g) Limitation [1f]: wherein the signal generated from the external driving signal is a sampling signal on the power loop, the installation detection circuit further comprises a detection determining circuit configured to detect the sampling signal for determining whether the LED tube lamp is properly installed on the lamp socket, and the power loop includes the switch circuit and the detection determining circuit, and

132. As similarly discussed in Section VIII.A.5(g), detector 150, comparator 170, and Z test load 140 altogether form the claimed "detection determining circuit." *Compare* Ivey345, Fig. 3 (modified, annotated below), *and* Sadwick, Fig. 14, ¶¶[0080], [0082], *and* Section VIII.B.3, *with, e.g.*, '140 Patent, Fig. 15K, 49:63-50:47.

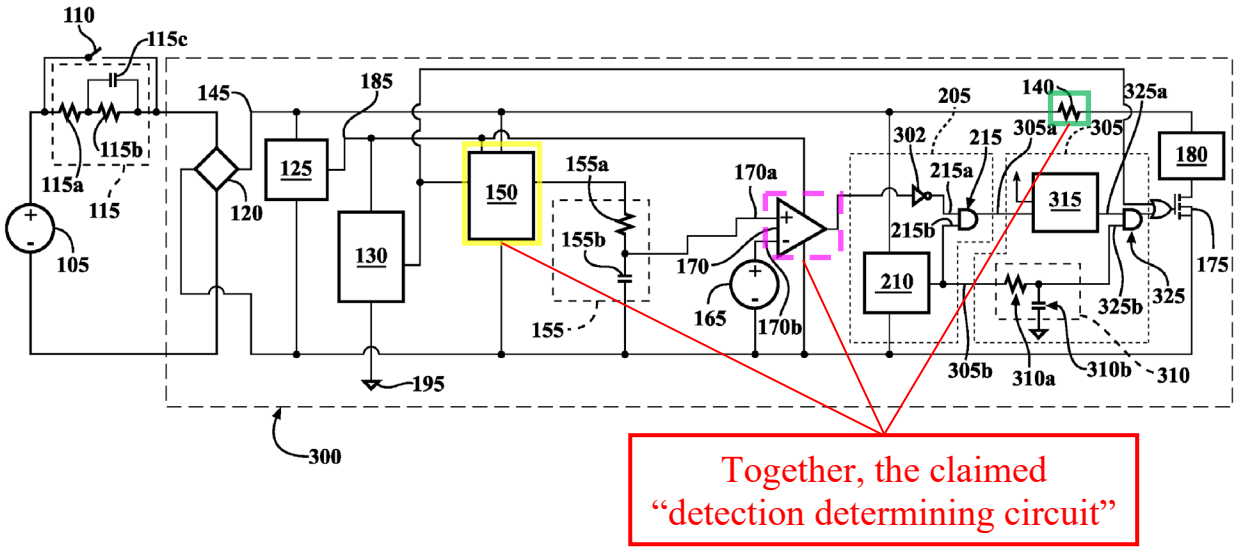

Detector 150 detects a variation across device power rail 145 and outputs a corresponding signal to comparator 170, which compares this signal to the threshold signal to detect whether a fault configuration exists. Ivey345, ¶¶[0024]-[0032], [0010]; Sadwick, ¶¶[0080], [0082]; Sections VIII.B.3, VIII.A.5(g).

133. Lastly, load switch 175 and Z test load 140 are in series with device power rail 145 and the LEDs ("the power loop includes the switch circuit and the detection determining circuit"). Ivey345, ¶¶[0021]-[0027], [0010], [0035]-[0036]; Sadwick, ¶¶[0080], [0082]; Section VIII.B.3.

(h) Limitation [1g]: wherein the pulse generating circuit is configured to output one or more pulse signals independent of whether the detection determining circuit detects the sampling signal.

134. *See* Sections VIII.A.5(h), VIII.B.3.

(i) Limitations [3a]-[3b]: The installation detection circuit according to claim 4, configured such that when the detection determining circuit determines that the sampling signal is greater than or equal to a predefined

signal, it is detected that the LED tube lamp is properly installed on the lamp socket; and
when the detection determining circuit determines that the sampling signal is smaller than a predefined signal, it is detected that the LED tube lamp is not properly installed on the lamp socket.

135. *See* Sections VIII.A.5(i)-VIII.A.5(j), VIII.B.3.

(j) Limitation [4pre]: An installation detection circuit configured in a light-emitting diode (LED) tube lamp configured to receive an external driving signal,

136. To the extent claim 4's preamble is limiting, the Ivey-Sadwick Combination meets it. *See* Sections VIII.B.4(a), VIII.B.4(k)-VIII.B.4(l).

(k) Limitations [4a]-[4f]: the installation detection circuit comprising:
a pulse generating circuit configured to output one or more pulse signals;
wherein the installation detection circuit is configured to detect during at least one of the one or more pulse signals whether the LED tube lamp is properly installed on a lamp socket, based on detecting a signal generated from the external driving signal; and
a switch circuit coupled to the pulse generating circuit, wherein the one or more pulse signals control turning on and off of the switch circuit;
wherein the installation detection circuit is further configured to:
when it is detected during one of the one or more pulse signals that the LED tube lamp is not properly installed on the lamp socket, control the switch circuit to remain in an off state to cause a power loop of the LED tube lamp to be open; and
when it is detected during one of the one or more pulse signals that the LED tube lamp is properly installed on the lamp socket, control the switch circuit to remain in a conducting state to cause the power loop of the LED

tube lamp to maintain a conducting state, and wherein the signal generated from the external driving signal is a sampling signal on the power loop, the installation detection circuit further comprises a detection determining circuit configured to detect the sampling signal for determining whether the LED tube lamp is properly installed on the lamp socket, and the power loop includes the switch circuit and the detection determining circuit; and

137. *See* Sections VIII.B.4(c)-VIII.B.4(g).

(l) Limitation [4g]: wherein the installation detection circuit further includes a detection result latching circuit coupled to the switch circuit, wherein the detection result latching circuit is configured to receive the one or more pulse signals to control turning on and off of the switch circuit based on a detection result signal from the detection determining circuit.

138. The OR gate along with logic inverter 302 and latch 315 (together in dotted-orange) meets the claimed "detection result latching circuit" under both the term's plain and ordinary meaning and the *CH* Court's construction (*see* EX1026, 6; Section VII.B.3):

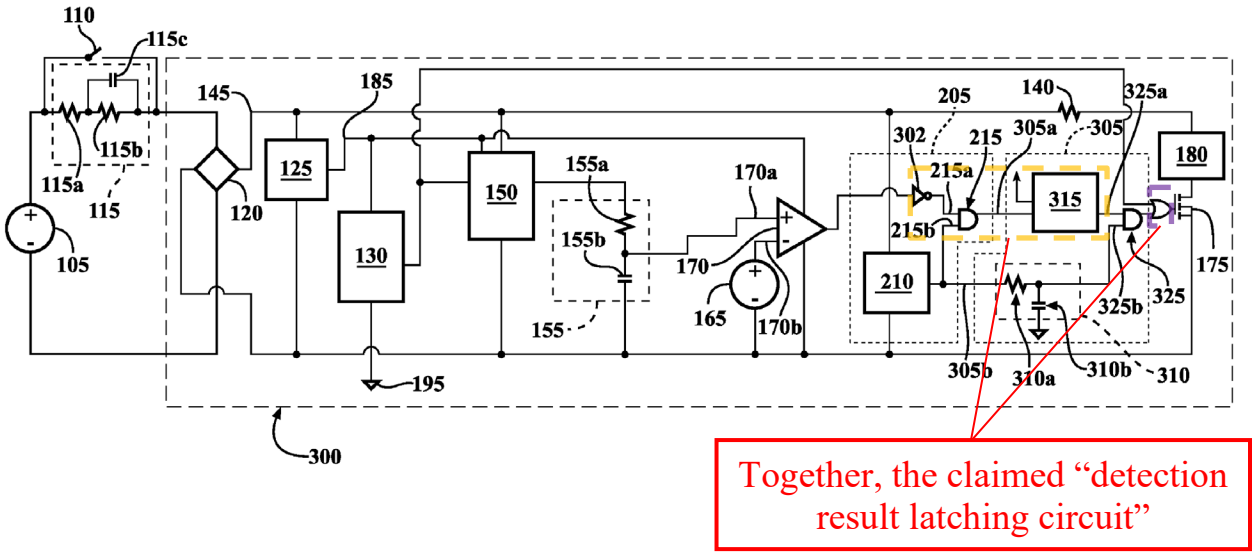

Ivey345, Fig. 3 (modified, annotated). Specifically, the OR gate receives oscillator 130's clock signal, causing load switch 175 to close at least when oscillator 130's clock signal oscillates high ("detection result latching circuit is configured to receive the one or more pulse signals to control turning on and off of the switch circuit," and the *CH* Court's construction of "outputs a high logic value when either… ***the pulse signal output terminal***… has a high logic value"). Section VIII.B.3; EX1026, 6 (emphasis added). The OR gate also receives latch 315's output, which as explained in Section VIII.A.5(m) is latched either "high" or "low" to turn on or off load switch 175, respectively, depending on the inverted comparator output ("control turning on and off of the switch circuit based on a detection result signal from the detection determining circuit," and the *CH* Court's construction of "***stores the detected result*** and outputs a high logic value when either ***the stored detected result***… has a high

logic value"). Ivey345, ¶¶[0043]-[0046], [0030]-[0032]; EX1026, 6 (emphasis added).

(m) Limitation [21pre]: An installation detection circuit configured in a light-emitting diode (LED) tube lamp,

139. To the extent claim 21's preamble is limiting, the Ivey-Sadwick Combination meets it. *See* Sections VIII.B.4(a), VIII.B.4(n)-VIII.B.4(s).

(n) Limitation [21a]: the installation detection circuit comprising:
means for generating one or more pulse signals;

140. *See* Sections VIII.A.5(o), VIII.B.3.

(o) Limitation [21b]: means for detecting during one or more pulse signals whether the LED tube lamp is properly installed on a lamp socket; and

141. *See* Sections VIII.A.5(p), VIII.B.4(g).

(p) Limitation [21c]: a switch circuit coupled to the means for generating one or more pulse signals, wherein the one or more pulse signals control turning on and off of the switch circuit;

142. *See* Sections VIII.B.4(o), VIII.B.4(d).

(q) Limitations [21d]-[21e]: wherein the installation detection circuit is further configured to:
when it is detected during one of the one or more pulse signals that the LED tube lamp is not properly installed on the lamp socket, control the switch circuit to remain in an off state to cause a power loop of the LED tube lamp to be open; and
when it is detected during one of the one or more pulse signals that the LED tube lamp is properly installed on the lamp socket, control the switch circuit to remain in

a conducting state to cause the power loop of the LED tube lamp to maintain a conducting state,

143. *See* Sections VIII.B.4(e)-VIII.B.4(f).

(r) Limitation [21f]: wherein the means for detecting is configured to detect a sampling signal on the power loop for determining whether the LED tube lamp is properly installed on the lamp socket, and the power loop includes the switch circuit and the means for detecting, and

144. *See* Sections VIII.B.4(p), VIII.B.4(g).

(s) Limitation [21g]: wherein the LED tube lamp is configured to receive an external driving signal and comprises a rectifying circuit for rectifying the external driving signal and a filtering circuit coupled to the rectifying circuit, wherein the installation detection circuit is coupled between the rectifying circuit and the filtering circuit.

145. *See* Section VIII.A.5(u). For the same discussed reasons, a POSITA would have recognized that, in the Ivey-Sadwick Combination, Ivey345's current limiting circuit as modified by Sadwick (*see* Section VIII.B.3) would have been between power converter 36's rectifier circuit and current regulator circuit, the latter including the claimed "filtering circuit." *See* Ivey813, 5:33-39; Ivey345, ¶¶[0012], [0015]-[0016]; Section VIII.A.5(u). As further evidence, Sadwick itself teaches that, when utilizing its series configuration, "[o]ther circuitry 914 can be included to perform other desired functions such as… constant current regulation…." Sadwick, ¶[0073]. Sadwick illustrates these teachings in Figures 9-13, which show that such

"[o]ther circuitry" are always placed downstream, and not before, its hazard protection circuitry:

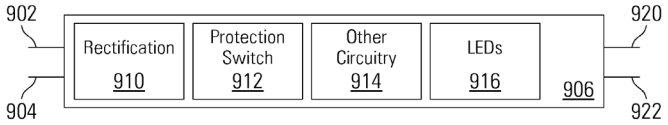

FIG. 9

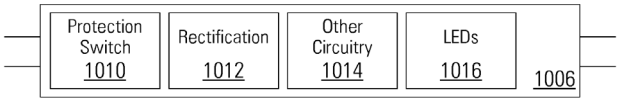

FIG. 10

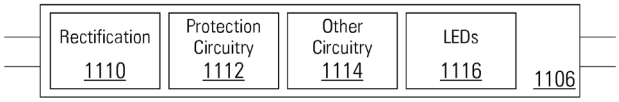

FIG. 11

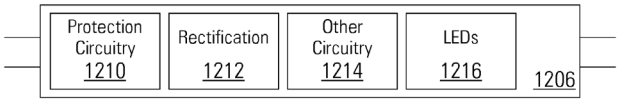

FIG. 12

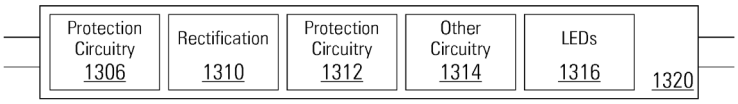

FIG. 13

Sadwick, Figs. 9-13, ¶¶[0072]-[0078].

(t) Limitations [22a]-[22b]: The installation detection circuit according to claim 21, wherein when the means for detecting determines that the sampling signal is greater than or equal to a predefined signal, it is detected that the LED tube lamp is properly installed on the lamp socket; and
when the means for detecting determines that the

sampling signal is smaller than a predefined signal, it is detected that the LED tube lamp is not properly installed on the lamp socket.

146. *See* Sections VIII.A.5(v), VIII.B.4(g).

(u) Claim 23: The installation detection circuit according to claim 21, further comprising a detection result latching circuit coupled to the switch circuit, wherein the detection result latching circuit is configured to receive the one or more pulse signals to control turning on and off of the switch circuit based on a detection result signal from the means for detecting.

147. *See* Sections VIII.B.4(o), VIII.B.4(l).

(v) Limitation [24pre]: A detection method adopted by a light-emitting device (LED) tube lamp for preventing a user from electric shock when the LED tube lamp is being installed on a lamp socket,

148. To the extent claim 24's preamble is limiting, the Ivey-Sadwick Combination meets it by utilizing, within "power converter 36" of Ivey813's "LED-based light tube," Ivey345's "current limiting circuit," as modified in accordance with Sadwick, to detect during relamping whether a subject user is making contact with the tube's return terminal while the tube's power terminal is connected to "fixture 11" (Ivey345's "power source 105") and, if such occurs, to "maintain[] the current flowing through the subject at a low and safe level." Ivey813, 2:50-54, 5:33-35; Ivey345, ¶¶[0010], [0004]-[0005]; Sadwick, ¶¶[0080], [0082]; Section VIII.B.3; *see also* Sections VIII.B.4(w)-VIII.B.4(z).

(w) Limitation [24a]: the detection method comprising: when at least one end of the LED tube lamp is installed

on the lamp socket, generating one or more pulse signals by a pulse generating circuit, wherein the pulse generating circuit is configured in the LED tube lamp;

149. *See* Sections VIII.A.5(y), VIII.B.3.

(x) Limitation [24b]: detecting a sampling signal on a power loop of the LED tube lamp by a detection determining circuit, to detect during the one or more pulse signals whether the other end of the LED tube lamp is properly installed on the lamp socket;

150. *See* Section VIII.B.4(g). Detector 150, comparator 170, and Z test load 140 together form a "detection determining circuit" that performs the claimed "detecting."

(y) Limitation [24c]: receiving the one or more pulse signals through a detection result latching circuit by a switch circuit, wherein the switch circuit is on the power loop; and

151. As discussed in Section VIII.B.4(l), the OR gate, logic inverter 302, and latch 315 together meet the claimed "detection result latching circuit" under both the term's plain and ordinary meaning and the *CH* Court's construction. *See* EX1026, 6; Section VII.B.3. Specifically, the OR gate outputs (and thus load switch 175 receives) a high signal when oscillator 130's clock signal oscillates high ("receiving the one or more pulse signals through a detection result latching circuit by a switch circuit" under either construction of "detection result latching circuit") or latch 315's output is latched high. Ivey345, ¶¶[0030]-[0032], [0043]-[0046]; Sadwick, ¶¶[0080], [0082]; Section VIII.B.4(l). Further, such operation determines whether

current may flow from device power rail 145 through load switch 175, which is in series with device power rail 145 and the LEDs ("switch circuit is on the power loop"). Ivey345, ¶¶[0010], [0035]-[0036], [0045]; Sadwick, ¶¶[0080], [0082]; Sections VIII.B.4(g), VIII.B.4(l).

(z) Limitation [24d]: comparing the sampling signal with a predefined signal, wherein during the one or more pulse signals when the sampling signal is smaller than the predefined signal, the detection method further comprises:
controlling the switch circuit to remain in an off state to cause the power loop of the LED tube lamp to be open.

152. *See* Section VIII.A.5(bb). Differently here, test load switch 135 is eliminated, and oscillator 130's output is connected to load switch 175 via an OR gate. Section VIII.B.3. Thus, when comparator 170 outputs a low signal and oscillator 130 thereafter oscillates low as discussed, load switch 175 opens, opening device power rail 145. Ivey345, ¶¶[0020]-[0022], [0024], [0030]-[0032], [0010], [0044]-[0045]; Sadwick, ¶¶[0080], [0082]; Section VIII.B.3.

(aa) Limitations [25a]-[25c]: The detection method according to claim 24, wherein the step of controlling the switch circuit to remain in an off state to cause the power loop of the LED tube lamp to be open comprises:
outputting a first low level signal by the detection determining circuit;
receiving the first low level signal by the detection result latching circuit and outputting a second low level signal; and
receiving the second low level signal by the switch

circuit and maintaining an off state of the switch circuit to cause the power loop to be open.

153. *See* Sections VIII.A.5(cc), VIII.B.3.

(bb) Claim 26: The detection method according to claim 24, wherein during any of the one or more pulse signals when the sampling signal is greater than or equal to the predefined signal, the detection method further comprises:
controlling the switch circuit to remain in a conducting state to cause the power loop of the LED tube lamp to maintain a conducting state.

154. *See* Sections VIII.A.5(dd), VIII.B.3.

(cc) Limitations [27a]-[27c]: The detection method according to claim 26, wherein the step of controlling the switch circuit to remain in a conducting state to cause the power loop of the LED tube lamp to maintain a conducting state comprises:
outputting a first high level signal by the detection determining circuit;
receiving the first high level signal by the detection result latching circuit and outputting a second high level signal; and
receiving the second high level signal by the switch circuit and conducting the switch circuit to cause the power loop to maintain a conducting state.

155. *See* Sections VIII.A.5(ee), VIII.B.3.

(dd) Claim 28: The detection method according to claim 24, wherein a period of each of the one or more pulse signals is between 10 microseconds and 1 millisecond.

156. *See* Sections VIII.A.5(ff), VIII.B.3.

(ee) Limitations [30a]-[30b]: The installation detection circuit according to claim 4, configured such that when the detection determining circuit determines that the

sampling signal is greater than or equal to a predefined signal, it is detected that the LED tube lamp is properly installed on the lamp socket; and
when the detection determining circuit determines that the sampling signal is smaller than a predefined signal, it is detected that the LED tube lamp is not properly installed on the lamp socket.

157. *See* Section VIII.B.4(i).

(ff) Claim 31: The installation detection circuit according to claim 1, further comprising a detection result latching circuit coupled to the switch circuit, wherein the detection result latching circuit is configured to receive the one or more pulse signals to control turning on and off of the switch circuit based on a detection result signal from the detection determining circuit.

158. *See* Section VIII.B.4(l).

(gg) Claim 35: The installation detection circuit according to claim 1, wherein a period of each of the one or more pulse signals is between 1 microsecond and 1 millisecond.

159. *See* Section VIII.B.4(gg), VIII.B.3.

C. Grounds 3-4: Ivey813, Ivey345, and Powell—and Optionally Sadwick—and Claims 1, 4-5, and 32

1. Powell

160. Powell is directed to "using a current source to provide a charging current to a capacitor of a resistor-capacitor (RC) tank of an RC oscillator." Powell, 1:18-22. Powell's Figure 3 provides an example of such an "RC oscillator 200":

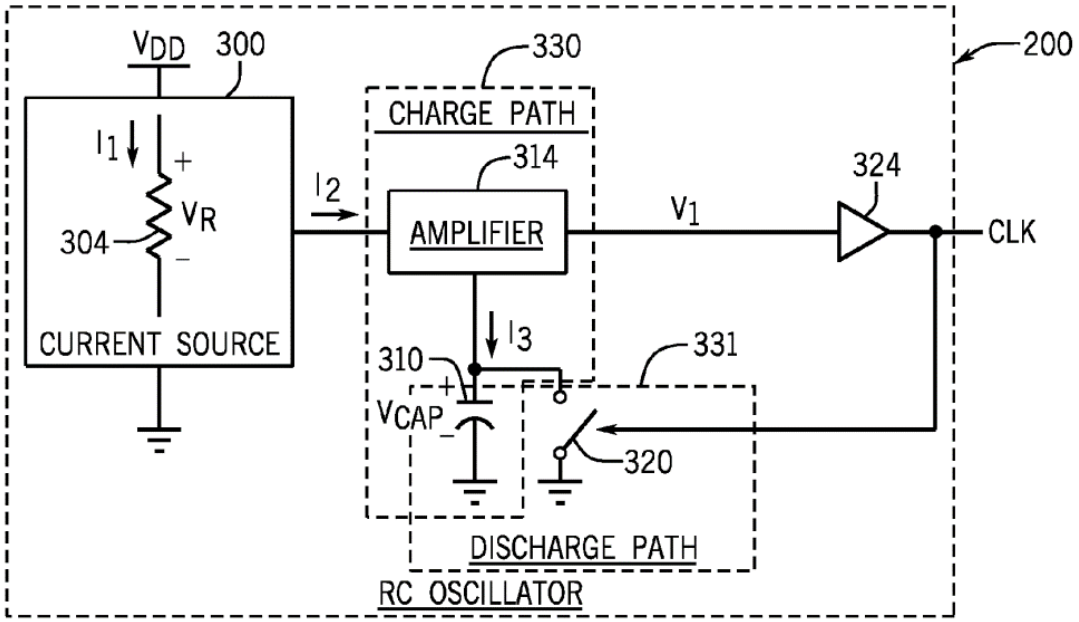

FIG. 3

Powell, Fig. 3. As shown, the RC oscillator is powered by a standard "V_{DD} supply voltage" and includes "current source 300." Powell, 7:23-35, 4:62-64. During a "charging part" of the RC oscillator's "oscillation cycle," current source 300 outputs constant current "I_2," which produces charging current "I_3" within "charge path 330." Powell, 5:1-6. Further, "switch 320 does not conduct," causing "capacitor 310" to charge and thus its voltage "V_{CAP}" to increase. Powell, 5:9-12, 5:23-29. V_{CAP} is amplified by "amplifier 314" to produce a voltage "V_1," which is received by "digital buffer 324 that pulse shapes the V_1 voltage (i.e., sharpens the rising and falling edges of the V_1 voltage) to provide the CLK signal at the output of the buffer 324." Powell, 5:13-22, 6:1-5.

161. As capacitor 310 charges, "the V_1 voltage eventually reaches a voltage, which causes the switch 320 to conduct, or turn on, and consequently begin [a]

discharging part of the cycle in which the capacitor 310 is discharged through the switch [320] to ground." Powell, 5:29-34. Switch 320 thus forms "discharge path 331." Powell, 5:23-25. "The discharging of the capacitor 310, in turn, causes the V_1 and V_{CAP} voltages to decrease; and the lowered V_1 voltage causes the switch 320 to turn off, thereby ending the [dis]charging part of the current cycle and beginning the charging part of the next cycle." Powell, 5:34-39. Powell's Figure 4 illustrates V_1's oscillating waveform from charging (T_0 to T_2) and discharging (T_2 to T_3) capacitor 310:

FIG. 4

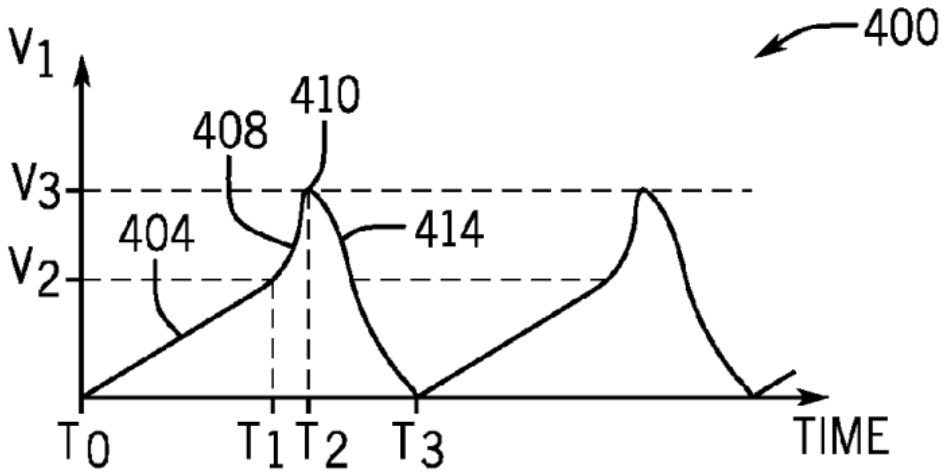

Powell, Fig. 4, 6:34-38.

162. Lastly, current source 300 includes "resistor 304," which together with capacitor 310 form the RC oscillator's "RC tank" that "establishes the resonance frequency for the oscillator"—i.e., "the product of the resistance of the resistor 304 and the capacitance of the capacitor 310 establishes the periodic frequency of the oscillation cycle." Powell, 4:62-64, 2:34-40. "Resistor 304 also establish[es] the

current that is provided by the current source [300]." Powell, 2:53-58. Configuring resistor 304 to perform such "dual functions" allows "die area [to be] preserved (i.e., one less resistor is used)," and "current (and therefore power consumption) may be reduced…." Powell, 2:53-58, 6:19-24.

2. Rationale to Combine the Ivey and Ivey-Sadwick Combinations with Powell

163. Regarding Ivey345's current limiting circuit in the Ivey (*see* Section VIII.A.4) and Ivey-Sadwick (*see* Section VIII.B.3) Combinations, Ivey345 states that oscillator 130 may be, e.g., a "relaxation-type oscillator"; is auxiliary-powered by, e.g., standard 5V power; and outputs an oscillating signal (*see* Ivey345, ¶¶[0019]-[0020], [0017]). But Ivey345 provides no specific layout for oscillator 130 and instead specifies oscillator 130 (solid-red) as an empty box:

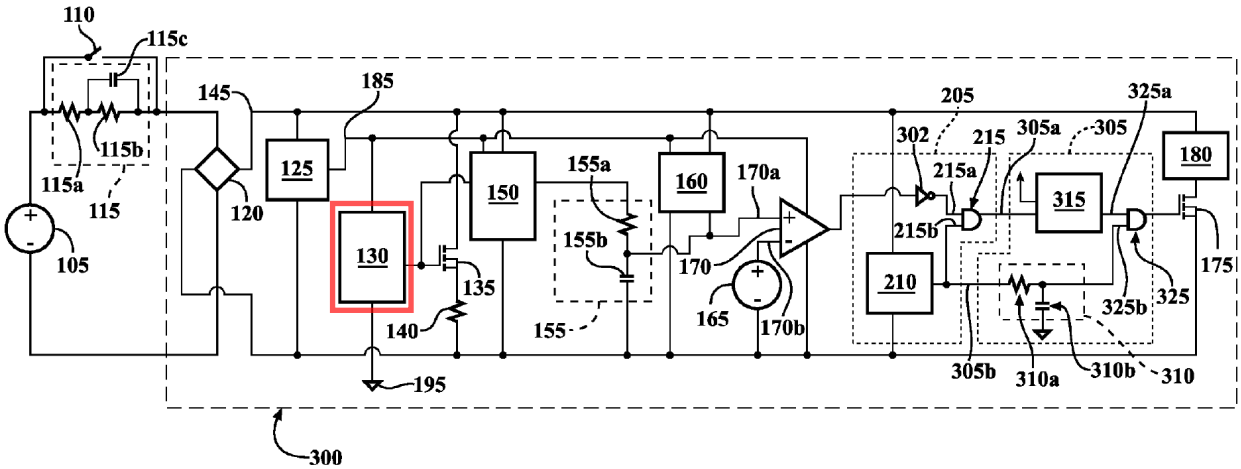

FIG. 3

Ivey345, Fig. 3 (annotated). Such a generic description for oscillator 130 thus teaches no more than using any known oscillator capable of performing oscillator

130's functions of outputting an oscillating signal that opens and closes test load switch 135 and, indirectly, load switch 175 in the Ivey Combination (*see* Sections VIII.A.4, VIII.A.5(m); Ivey345, ¶¶[0020]-[0022], [0024]), or simply load switch 175 in the Ivey-Sadwick Combination (*see* Section VIII.B.3; Ivey345, ¶¶[0010], [0035]-[0036], [0045]; Sadwick, ¶[0082]).

164. Powell's RC oscillator is such a known oscillator, as it is a "relaxation-type oscillator" as listed in Ivey345 (i.e., its output depends on charging and discharging a capacitor) (Powell, 4:65-67; *see also* Nave-2), is powered by a standard V_{DD} supply voltage (Powell, 7:23-35), and outputs an oscillating signal V_1 (Powell, 4:65-5:39, 6:34-38, Fig. 4). Thus, Ivey345 teaches using an RC oscillator like Powell's as Ivey345's oscillator 130 within the Ivey and Ivey-Sadwick Combinations. Further, a POSITA would have been otherwise motivated to use Powell's RC oscillator accordingly, because Powell's RC oscillator likewise generates an oscillating clock signal while providing numerous advantages, including reduced die area and power consumption. Powell, 6:19-21.

3. The Resulting "Ivey-Powell" and "Ivey-Sadwick-Powell Combinations"

165. So modified, Powell's RC oscillator is used as oscillator 130 in Ivey345's current limiting circuit within the Ivey Combination (*see* Section VIII.A.4; Ivey345, ¶¶[0020]-[0022], [0024]) (the "Ivey-Powell Combination) and the Ivey-Sadwick Combination (*see* Section VIII.B.3; Ivey345, ¶¶[0010], [0035]-

[0036], [0045]; Sadwick, ¶[0082]) (the "Ivey-Sadwick-Powell Combination"). Specifically, Powell's RC oscillator is auxiliary-powered—it receives its "V_{DD} supply voltage" from Ivey345's "auxiliary power supply 125" (*see* Powell, 7:23-35; Ivey345, ¶¶[0016], [0019])—and outputs an oscillating signal (V_1) to control the same circuit elements as oscillator 130 (Ivey345, ¶[0019]-[0022], [0024], [0027], [0043]; Powell, 4:65-5:39, 6:34-38, Fig. 4).

4. Element-by-Element Analysis

(a) Limitation [1pre]: An installation detection circuit configured in a light-emitting diode (LED) tube lamp configured to receive an external driving signal,

166. *See* Sections VIII.A.5(a), VIII.B.4(a), VIII.C.3; *see also* Sections VIII.C.4(b)-VIII.C.4(d).

(b) Limitation [1a]: the installation detection circuit comprising:
a pulse generating circuit configured to output one or more pulse signals;

167. *See* Sections VIII.A.5(b), VIII.B.4(b). Differently here, Powell's "RC oscillator" is used as oscillator 130 in Ivey345's current limiting circuit, which likewise outputs an oscillating signal V_1. Powell, 4:65-5:39, 6:34-38, Fig. 4; Ivey345, ¶[0019]; Sadwick, ¶[0082]; Section VIII.C.3. Excluding "digital buffer 324," each of the other elements in the RC Oscillator—"current source 300," "capacitor 310," "charge path 330," and "discharge path 331" (together in solid-red)—form the claimed "pulse generating circuit":

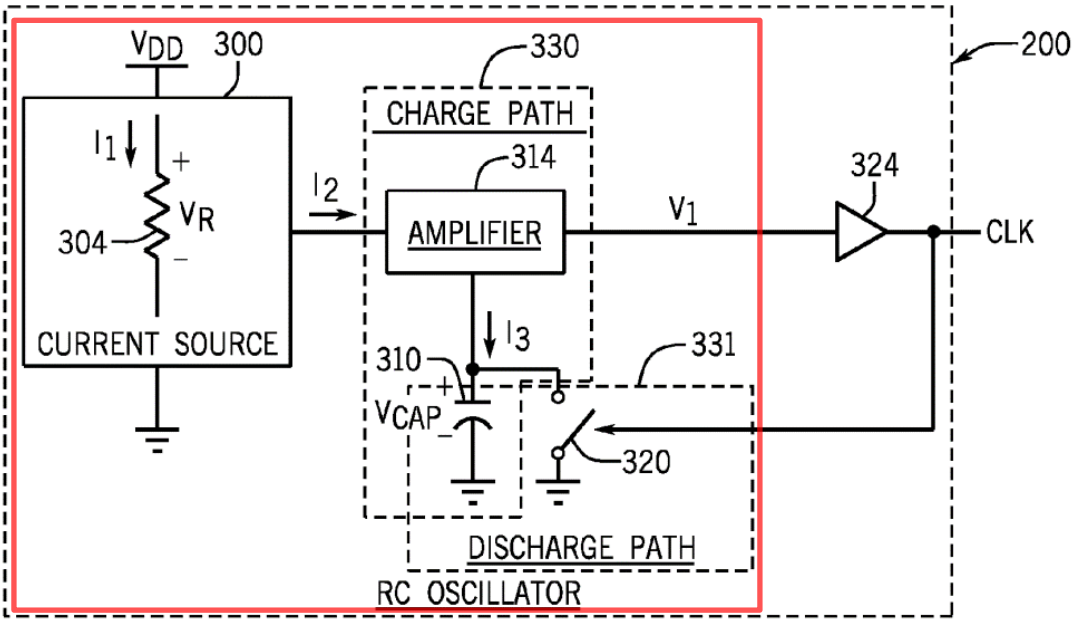

FIG. 3

Powell, 4:65-5:39, Fig. 3 (annotated); *see also* '140 Patent, 49:1-10, Fig. 15H.

(c) Limitations [1b]-[1f]: wherein the installation detection circuit is configured to detect during at least one of the one or more pulse signals whether the LED tube lamp is properly installed on a lamp socket, based on detecting a signal generated from the external driving signal; and
a switch circuit coupled to the pulse generating circuit, wherein the one or more pulse signals control turning on and off of the switch circuit;
wherein the installation detection circuit is further configured to:
when it is detected during one of the one or more pulse signals that the LED tube lamp is not properly installed on the lamp socket, control the switch circuit to remain in an off state to cause a power loop of the LED tube lamp to be open; and
when it is detected during one of the one or more pulse signals that the LED tube lamp is properly installed on the lamp socket, control the switch circuit to remain in a conducting state to cause the power loop of the LED tube lamp to maintain a conducting state,
wherein the signal generated from the external driving

signal is a sampling signal on the power loop, the installation detection circuit further comprises a detection determining circuit configured to detect the sampling signal for determining whether the LED tube lamp is properly installed on the lamp socket, and the power loop includes the switch circuit and the detection determining circuit, and

168. *See* Sections VIII.A.5(c)-VIII.A.5(g), VIII.B.4(c)-VIII.B.4(g), VIII.C.3.

(d) Limitation [1g]: wherein the pulse generating circuit is configured to output one or more pulse signals independent of whether the detection determining circuit detects the sampling signal.

169. *See* Sections VIII.A.5(h), VIII.B.4(h). Consistent with such discussion, Powell's current source 300, capacitor 310, charge path 330, and discharge path 331 together receive only two inputs—a power input V_{DD} supply voltage input from auxiliary power supply 125, and a "CLK clock signal" from buffer 324—neither of which are controlled or affected by the current limiting circuit's downstream components and operation. Powell, 7:23-35, 6:1-5; Ivey345, ¶¶[0016], [0019]; Section VIII.C.3. Thus, such components operate independent of the current limiting circuit's downstream operations. Section VIII.C.3.

(e) Limitation [4pre]: An installation detection circuit configured in a light-emitting diode (LED) tube lamp configured to receive an external driving signal,

170. *See* Sections VIII.A.5(k), VIII.B.4(j), VIII.C.3, VIII.C.4(f)-VIII.C.4(h),

(f) Limitation [4a]: the installation detection circuit comprising:
a pulse generating circuit configured to output one or more pulse signals;

171. *See* Section VIII.C.4(b).

(g) Limitations [4b]-[4f]: wherein the installation detection circuit is configured to detect during at least one of the one or more pulse signals whether the LED tube lamp is properly installed on a lamp socket, based on detecting a signal generated from the external driving signal; and
a switch circuit coupled to the pulse generating circuit, wherein the one or more pulse signals control turning on and off of the switch circuit;
wherein the installation detection circuit is further configured to:
when it is detected during one of the one or more pulse signals that the LED tube lamp is not properly installed on the lamp socket, control the switch circuit to remain in an off state to cause a power loop of the LED tube lamp to be open; and
when it is detected during one of the one or more pulse signals that the LED tube lamp is properly installed on the lamp socket, control the switch circuit to remain in a conducting state to cause the power loop of the LED tube lamp to maintain a conducting state, and
wherein the signal generated from the external driving signal is a sampling signal on the power loop, the installation detection circuit further comprises a detection determining circuit configured to detect the sampling signal for determining whether the LED tube lamp is properly installed on the lamp socket, and the power loop includes the switch circuit and the detection determining circuit; and

172. *See* Section VIII.C.4(c).

(h) Limitation [4g]: wherein the installation detection circuit further includes a detection result latching circuit coupled to the switch circuit, wherein the detection result latching circuit is configured to receive the one or more pulse signals to control turning on and off of the switch circuit based on a detection result signal from the detection determining circuit.

173. *See* Sections VIII.A.5(m), VIII.B.4(l), VIII.C.3.

(i) Claim 5: The installation detection circuit according to claim 4, wherein the pulse generating circuit is coupled to an output of the detection result latching circuit to control the time of the one or more pulse signals.

174. While current source 300, capacitor 310, charge path 330, and discharge path 331 form the claimed "pulse generating circuit" (Section VIII.C.4(b)), the remaining buffer 324 (dotted-orange) instead forms an additional portion of the claimed "detection result latching circuit":

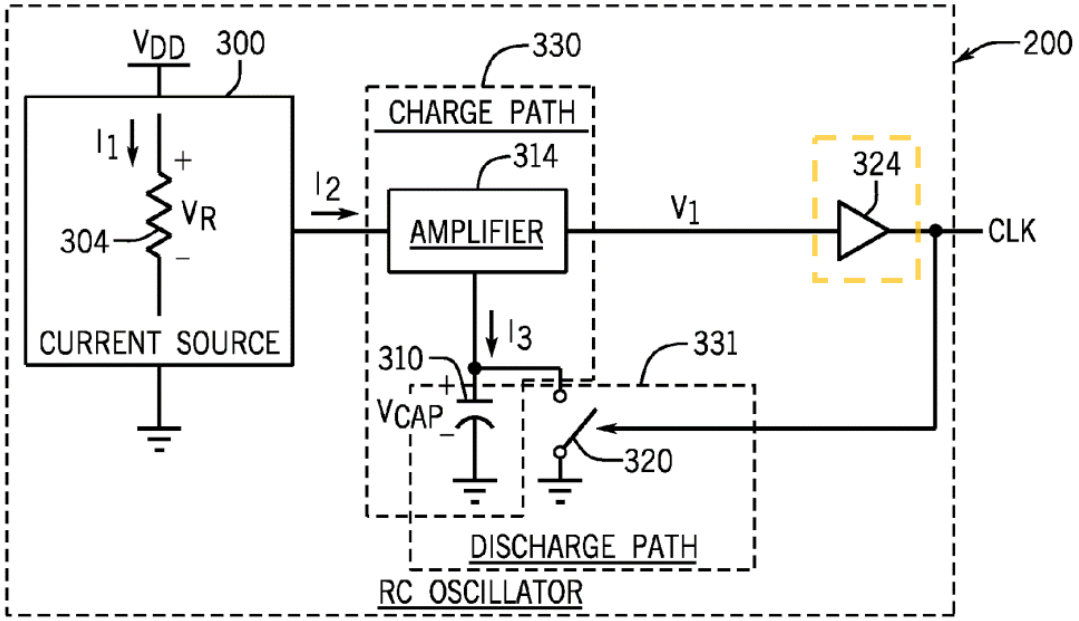

FIG. 3

Powell, Fig. 3 (annotated), 6:1-5. Thus, in the Ivey-Powell Combination, the claimed "detection result latching circuit" comprises Powell's buffer 324, along with Ivey345's logic inverter 302 and latch 315. *See* Sections VIII.A.5(m), VIII.C.3. And in the Ivey-Sadwick-Powell Combination, the claimed "detection result latching circuit" comprises buffer 324, logic inverter 302, latch 315, and the OR gate. *See* Sections VIII.B.4(l), VIII.C.3.

175. As Powell teaches, Powell's RC oscillator charges and discharges capacitor 310 to cause the output signal, V_1, to increase and decrease correspondingly—i.e., oscillate. Powell, 5:13-39. Specifically, V_1 is pulse shaped by buffer 324 and outputted to switch 320, which closes and opens as V_1 increases and decreases to control "when the charging and discharging parts of the oscillation cycle begin and end" ("the pulse generating circuit is coupled to an output of the detection result latching circuit to control the time of the one or more pulse signals"). Powell, 5:13-39; *see also* '140 Patent, 47:7-50.

176. Should there be any argument that the inclusion of buffer 324 as part of the claimed "detection result latching circuit," rather than "pulse generating circuit," is overly arbitrary, such would be inconsistent with Patent Owner's infringement contentions in the *Current* Action. Specifically, Patent Owner's arguments are that Petitioner's products include a "detection result latching circuit" (dotted-cyan) that

receives pulse signal S5 (solid-blue) from a pulse generating circuit (dotted-blue) and modifies this signal using various components, e.g., "a Schmitt Trigger":

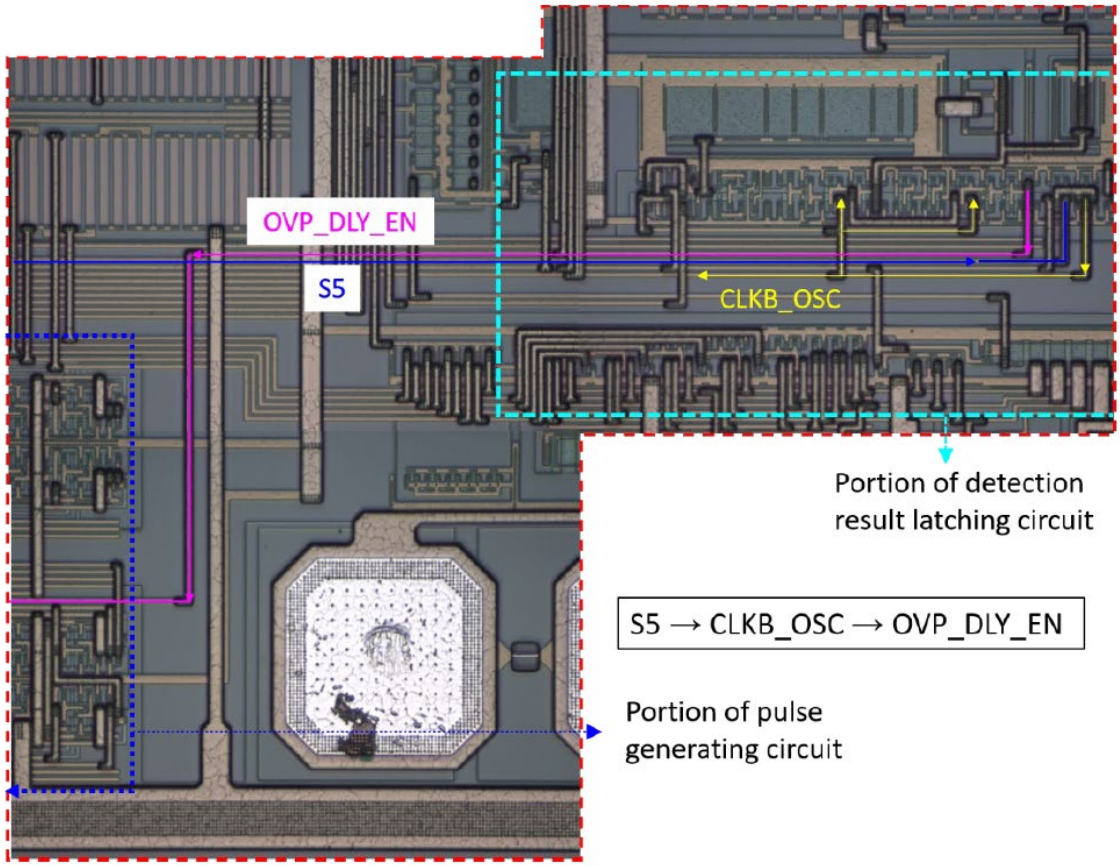

EX1034, 38-40; EX1035, 40-42. "More than one signal is generated as an output from these components," including an "OVP_DLY_EN" signal (magenta), "which serves as a reset signal" for the pulse generating circuit—that is, "to control the time of the one or more pulse signals." EX1034, 38-40; EX1035, 40-42. But, just as Patent Owner includes a "Schmitt trigger" as a portion of its mapped "detection result latching circuit" accordingly, grounds 3-4 as discussed above likewise map

Powell's buffer 324,[12] which similarly modifies the pulse signal V_1 to generate a CLK signal that is outputted to multiple paths including one leading back to switch 320, to form part of the "detection result latching circuit." Powell, 5:13-39. Therefore, buffer 324 may be considered part of the claimed "detection result latching circuit." *see also* '140 Patent, 9:28-51.

(j) Claim 32: The installation detection circuit according to claim 31, wherein the pulse generating circuit is coupled to an output of the detection result latching circuit to control the time of the one or more pulse signals.

177. See Section VIII.C.4(i).

IX. CONCLUSION

All statements made herein of my own knowledge are true, all statements made herein on information and belief are believed to be true, and these statements were made with the knowledge that willful false statements and the like are punishable by fine or imprisonment, or both, under 18 U.S.C. §1001.

Thursday, June 29, 2023

Date

Michael Lebby, Ph.D.

[12] "A Schmitt trigger ***is a buffer*** used to convert a slow or noisy signal into a clean one before passing it to the FPGA." Actel, 3 (emphasis added).

Appendix A

Michael Lebby

EDUCATION:

2004, Doctor of Engineering (D. Eng.)
University of Bradford, United Kingdom
Citation, "*Technical Contributions to Optoelectronics"*
(NB: This is a higher doctorate awarded on technical contribution to the field)

1987, Ph.D.
University of Bradford, United Kingdom
Thesis, "*Characterization and Fabrication of the HFET and BICFET"*

1985, MBA
University of Bradford, United Kingdom
Thesis, "*Small Business Planning for a Start-up"*

1984, Bachelors (B. Eng. – Honours)
University of Bradford, United Kingdom
Thesis, "*Computer Aided Testing of Semiconductor Devices"*

SUMMARY OF TECHNICAL EXPERTISE:

Industry roles (majority of career): Dr, Lebby has founded and led several companies in various positions including CEO and CTO (Ignis Optics, Oculi, One Chip Photonics, OIDA, Translucent Photonics, and Lightwave Logic). Dr. Lebby is currently Chairman & CEO of a public company (Lightwave Logic Inc. NASDAQ:LWLG). As CEO, Dr. Lebby led LWLG from an OTCQB company to OTCQX, and then to up-list on NASDAQ, organically, without raising financing (which is extremely rare), on 1st September 2021. Subsequently, Dr. Lebby was invited to 'ring the bell' and close the NASDAQ stock market for ethe week on 10th September 2021. The event was carried live on Fox, CNBC, Bloomberg, and BNN networks. On 1st September 2022, Lebby was elected Chairman of Lightwave Logic Inc.

Academia role (minor part of career): Dr. Lebby has been a full professor (part-time) in optoelectronics at Glyndŵr University, Wales, UK (2013-15). Dr. Lebby has over 60 publications and has a google scholar h-index = 46 (which includes issued patents and published patent applications), i10-index = 165, with over 8400 citations.

Key professional bodies: Dr. Lebby is a Fellow of the National Academy of Inventors (NAI), the IEEE (Institute of Electrical and Electronic Engineers), and the OSA (Optical Society of America). Dr. Lebby is a Chartered Engineer of the British Institute of Electrical Engineers (roughly equivalent to the professional engineer status in USA).

Dr. Lebby started work in telecommunications industry and has generated over 40 years of experience in a number of technical disciplines and technologies. Dr. Lebby is well versed in electronics, semiconductor physics, optoelectronics, optics, materials, packaging, module design, ICs and electrical engineering in general. Dr. Lebby has experience in commercial and industrial research of technologies such as silicon, compound semiconductors, manufacturing, fabrication, design, simulation, testing, evaluation, reliability, qualification of new ideas, concepts and products.

Professor (Dr. Dr.) Michael S. Lebby, B. Eng. (Hons), MBA, Ph.D., D. Eng, Fellow NAI, IEEE, OSA; C. Eng.
1 Hawthorne St., unit 25a, San Francisco, CA 94105, USA; mobile +1 717 839 7078; drmlebby@gmail.com

Dr. Lebby is co-inventor of the world's first 'oxide VCSEL' (this is a type of semiconductor laser) that is now being utilized for consumer applications (*Face ID of Apple's iPhone as an example, laser mice for PCs as another example*). US Patent #5359618 "High Efficiency VCSEL and Method of Fabrication" issued 25th October 1994. Estimated commercial volumes of this semiconductor device exceed many billions of units.

Dr. Lebby has over 230 issued utility patents with the USPTO in subjects such as electronics, optoelectronics, photonics, packaging, transceiver modules, optical sub-assemblies, materials, epitaxial growth, device design, assembly, and various active and passive components (both electronic and optoelectronic). Dr. Lebby regularly receives invites to speak at technical conferences as well as banking and financial conferences. Dr. Lebby has appeared in panels and interviews many times and regularly is communicating with the public on various platforms. Dr. Lebby is currently chairman of the International PIC conference based in Europe (since it's conception in 2015). Dr. Lebby is inventor or co-inventor of ~230 issued USPTO utility patents (or over 450 if international derivatives are included), as well as over 80 published patent applications.

Dr. Lebby has participated in over 120 patent litigation cases as a technical expert witness, including over 10 trials and over 40 depositions. Dr. Lebby has authored numerous expert reports and is familiar with State (District), Federal (ITC) and PTAB-IPR court processes for expert witness testimony. Dr. Lebby has been cited in patent litigation case history (ITC investigation in the matter of: Certain Active Optical Cables and Products Containing the Same (ITC Inv #337-TA-1233)). See details below in Expert Witness Experience.

The types of products that Dr. Lebby understands and includes but are not limited to; Light Emitting Diodes (LEDs), Laser Diodes (LDs), photodetectors (PDs), optical waveguides, fiber optics, displays (LCD, LED, OLED), plastic photonics, optical polymers, sensors, LIDAR, solar cells, lighting, data communication, CMOS, and even new opportunities such as medical and life science applications for photonics. Dr. Lebby is internationally known for his work with integrated photonics, PICs (Photonic Integrated Circuits), silicon photonics, and semiconductor technologies such as InP, GaAs, III-GaN, silicon, as well as SiGe and silicon ICs (MOSFETs, FinFETs, bipolar), power FETs, RF FETs, various display technologies such as LCD, OLED, LED, as well as micro-fluidics and nanostructures/wires etc. Dr. Lebby has worked with DC current as well as AC current, high frequency design, microwave design, and multi-wavelength, visible wavelengths, in addition to 850nm/1310nm/1500nm/NIR fiber optic communications. Dr. Lebby has worked extensively in fiber optics which includes Fiber based systems, chassis', trays, modules, adapters, splice devices, connectors, transceivers, packaging as well as architecture and optical communication standards/protocols.

Dr. Lebby is currently CEO of a public company (Lightwave Logic Inc. NASDAQ:LWLG). As CEO, Dr. Lebby took LWLG from an OTCQX company to up-list on NASDAQ, organically, without raising financing (which is extremely rare). LWLG was listed on NASDAQ 1st September 2021, and Dr. Lebby was invited to close the NASDAQ stock market on 10th September 2021 and "ring the bell". The event was carried on Fox, CNBC, Bloomberg, and BNN networks.

BIOGRAPHY:

Biography: Michael S. Lebby joined Lightwave Logic as a member of the Board of Directors in 2015. In May 2017, Dr. Lebby assumed the role of CEO, and in September 2022, Chairman and CEO of Lightwave Logic Inc (NASDAQ:LWLG). Lightwave Logic is a technological company commercializing Electro-Optical polymers and successfully up listed the company to NASDAQ on 1st September, 2021. Dr. Lebby was invited to close the NASDAQ stock market on 10th September 2021. The event was carried on Fox, CNBC, Bloomberg, BNN networks.

Dr. Lebby (born 1961, London, UK) is an Anglo-American entrepreneur and intrapreneur in the fields of optoelectronics/photonics electronics and semiconductors. Dr. Lebby's career started with the British Government in 1977 in telecommunications and he did research at their research labs (RSRE Malvern) in the early 1980s. Dr. Lebby worked at AT&T's research labs: Bell Labs (1985-1989) in photonics, and subsequently drove the development (and co-authored the first patent) of the oxide VCSEL diode laser at Motorola in the 1990s (which is now used in laser mice, 3D structured light sensing/FaceID in mobile phones, optical interconnects; where volumes of the laser are over 1B units today). From 2005-2010 he led the USA trade association in optoelectronics (OIDA) and represented the optoelectronics and photonics industry on Capitol Hill.

Dr. Lebby has led and run technical start-ups and commercialized optoelectronic and photonics technology into volume manufacturing. Dr. Lebby has also had roles as a Venture Capitalist specializing in Optical Communications. He is currently a technical expert to the European Commission. He is a Fellow member of NAI (National Academy of Inventors), IEEE, and OSA, and has been voted PIC (Photonic Integrated Circuit) business leader of the year by the PIC International Conference in 2018.

Professor (Dr. Dr.) Michael S. Lebby, B. Eng. (Hons), MBA, Ph.D., D. Eng, Fellow NAI, IEEE, OSA; C. Eng.
1 Hawthorne St., unit 25a, San Francisco, CA 94105, USA; mobile +1 717 839 7078; drmlebby@gmail.com

Dr. Lebby holds over 450 issued international patents in photonics and electronics, that have been derived from over 230 issued USPTO utility patents, mostly in the field of optoelectronics, photonics, and semiconductors. He has been cited by the USPTO to be in the most prolific 75 inventors in USA from 1988-1997.

Dr. Lebby is passionate about photonics and has focused his efforts over the last 30years to drive new photonics manufacturing programs in USA and Europe as well as industry-based photonics technology roadmaps.

Dr. Lebby is also passionate about optics and philately, and has been elected to both the London Guild of Spectacle Makers as well as the Royal Philatelic Society London.

WORK HISTORY:

2003 – Present **Oculi LLC,** *CEO and CTO (part-time consulting)*

Oculi LLC provides consulting in expert witness, trial, deposition, expert reports, infringement, invalidity, and various patent and IP litigation in photonics, optoelectronics, semiconductors, and fiber optic telecommunication technology segments. Engaged patent agencies have included: IMS Expert Services, Thomson Reuters Expert Witness Services (now Round Table Group), LitXpert Expert Witness Group, Teklicon Expert Witness Agency, Beche Expert Services Group, Forensis Group: Expert Witness Services, and Expertconnect. Oculi LLC also provides consulting to Ambature Inc. in superconductivity.

2015 – Present **Lightwave Logic (NASDAQ:LWLG)***, Chairman, CEO, & Director, Board of Directors*

In 2015 Dr. Lebby became a director of Lightwave Logic to assist in the company for competitive optical modulator products and associated packaging, manufacturing, and technology roadmaps/marketing. In May 2017, Dr. Lebby became CEO of Lightwave Logic. On 1st September 2021, Dr. Lebby successfully guided Lightwave Logic to up-list to NASDAQ, and was invited to ring the closing bell on 10th September 2021. The NASDAQ up-list was organic i.e. no reverse split, no raised funds. The organic up-list is considered very rare in the financial industry. In September 2022, Lebby became Chairman and CEO of Lightwave Logic Inc.

2014 – 2016 **University Southern California,** *Director CFR (Corp & Foundation Relations)*

Dr. Lebby assisted USC Viterbi Engineering to foster tighter faculty-industry relationships in high technology, IT, social media, graphic arts, electronics, photonics (solar, display, medical) and fiber communications segments.

2013 – Present **European Commission***, Technical Expert*

In 2013 Dr. Lebby became a technical expert for the Photonics Unit of the European Commission. Dr. Lebby has participated in organizing workshops, lectures, evaluating photonics proposals, and advising the Commission on funded projects. Dr. Lebby currently is an advisor on 7 photonics pilot lines (MIRPHAB, PI-SCALE, PIX4LIFE, PIXAPP, InPULSE, Phabulous, PhotonHub) and photonics based cardiovascular disease programs (CARDIS and InSide). Work includes displays, LEDs, lighting, OLEDs, micro-optics, InP/Silicon photonics, near infra-red technologies, fiber optics, sensing, medical photonics, and medical imaging, technology roadmapping, electronics, IC design etc.

2013 – 2015 **OneChip Photonics Corporation***, President and CEO*

In 2008 Dr. Lebby was elected independent board member for One Chip Photonics Inc. He was elected CEO in 2013. One Chip Photonics focused on technical and business operational strategy for communications based InP Photonic Integrated Circuit (PIC) and optoelectronic Integrated Circuit (OEIC) platforms.

2013 – 2015 **Glyndŵr University***, Professor, Chair of Optoelectronics*

Professor (Dr. Dr.) Michael S. Lebby, B. Eng. (Hons), MBA, Ph.D., D. Eng, Fellow NAI, IEEE, OSA; C. Eng.
1 Hawthorne St., unit 25a, San Francisco, CA 94105, USA; mobile +1 717 839 7078; drmlebby@gmail.com

In 2013 Dr. Lebby became full Professor of Optoelectronics (part-time) to assist Glyndwr University to position itself as a leader in optoelectronics and photonics. Areas of focus include design, simulation, and testing of photonic integrated circuits (PICs) and optoelectronics integrated circuits (OEICs), laser diodes, displays, optics, and solar cells.

2010 – 2013 **Translucent, Inc.,** *GM and CTO*

Dr. Lebby positioned Translucent on the product development and manufacture of epitaxial semiconductor wafers for the solar, power and lighting industries. Dr. Lebby led the R&D and development of MBE based rare earth oxide single crystal epitaxial layers deposited onto large silicon wafers. On top of these wafers both MBE and MOCVD Gallium Nitride epitaxial device layers were grown for devices. The use of GaN-on-Si is expected to be a strong catalyst for change in the power electronics and LED lighting industries. In a parallel program at Translucent, Dr. Lebby led the development efforts to develop and productize Germanium-Tin (GeSn) template wafers onto large format silicon wafers (Ge-on-Si) to enable cost effective, and ultra-high efficiency multi-junction solar cells for the CPV industry. Areas of advanced interconnect using new and novel material compounds were explored.

2005 – 2010 **OIDA** (Optoelectronic Industry Development Association)**,** *Executive Director, President, and CEO (Board Member)*

Dr. Lebby represented the optoelectronics industry and organized technical conferences/workshops/forecasts with industry roadmaps. Initiated green photonics metrics. Dr. Lebby positioned OIDA as a national resource in the field of optoelectronics and has represented industry in many capacities ranging from talks, papers, expert witness, testimony, market and technical reports. Dr. Lebby created ***new industry-based initiatives*** in fiber optics broadband as well as the green photonics movement (solar technologies, displays, LED lighting technologies) that is now occurring globally.

2003 – 2005 **OCLARO,** *VP Technology and Business Development*

Telecommunication optoelectronic components, San Jose, Ca. Focus on technology strategy for components and sub-systems.

2001–- 2003 **Ignis Optics,** *President and CEO (Founder/Board Member)*

Venture-backed start-up, San Jose, California manufacturing 10Gbps and OC192/OC48 fiber optic transceivers with micro-controllers using the XFP form-factor.

1999 – 2001 **Intel Capital,** *Director Business Development/Investor (w/Board observer positions on Investment)*

Intel Capital, Santa Clara, California. In 1999, Dr. Lebby joined Intel as a corporate investor and was responsible for sourcing, negotiating, and closing private placement equity deals in the optical networking, component, display, projection technologies, LED lighting, and semiconductor arenas.

1998 – 1999 **TE Connectivity,** *Director Technology/BD (Fiber Optics)*

Global Optoelectronics Division: Technology strategy for optical communications products.

1989 – 1998 **Motorola,** *R&D Manager*

Corporate R&D Labs, Tempe, Arizona. Optoelectronics: VCSEL based product solutions (OPTOBUS); materials, devices, packaging, systems. Other technologies included displays, field emission, LED, LCD, OLED, virtual/micro

Professor (Dr. Dr.) Michael S. Lebby, B. Eng. (Hons), MBA, Ph.D., D. Eng, Fellow NAI, IEEE, OSA; C. Eng.
1 Hawthorne St., unit 25a, San Francisco, CA 94105, USA; mobile +1 717 839 7078; drmlebby@gmail.com

and projection. At the time, Dr. Lebby was also the lead inventor in Motorola's history with over 150 issued utility patents. Dr. Lebby worked in the silicon and compound semiconductor fabrication plants (fabs) to become proficient in deposition/etching/alignment tooling as well as design and simulation.

1985 – 1989 **AT&T,** *Researcher*

AT&T Bell Labs - Photonics Research Dept (Dept 11366), Holmdel, NJ. Dr. Lebby designed and fabricated new GaAs and InP optoelectronic and electronic devices that were grown both by MOCVD and MBE for projects that included optical computing and fiber optic communications.

1977 – 1984 **UK Ministry of Defense,** *Apprenticeship/Journeyman + Electronics Engineer (REME – Royal Electrical and Mechanical Engineers, and RSRE – Royal Signals and Radar Establishment)*

Dr. Lebby started his career at the Royal Electrical and Mechanical Engineer (REME) division of the Ministry of Defence in the UK. Lebby was a telecommunications apprentice, and repaired all types of radio/RF communications equipment. Lebby qualified as a fully qualified Journeyman or Apprentice specializing in telecommunications in 1980. Dr. Lebby moved to the Royal Signal and Radar Establishment (RSRE) to study material and characterization issues of GaAs and InP devices.

SELECTED PROFESSIONAL ACTIVITIES & AWARDS:

- Elected Chairman of Lightwave Logic Inc., NASDAQ:LWLG 1st September 2022
- Elected to the Corporate Engagement Council (newly formed OIDA to represent the global optical industry) for Optica in June 2022.
- Invited to ring the closing bell of NASDAQ (with associated TV interviews) on 10th September, 2021
- Elected Fellow of the **National Academy of Inventors** (NAI) in 2020.
- Voted winner at the PIC Conference (Photonic Integrated Circuits) as PIC **Entrepreneur and Business Leader of the Year** (March 2018).
- Dr. Lebby is **co-inventor of the oxide VCSEL** (semiconductor laser) that is now being utilized for consumer applications (*Face ID of Apple's iPhone as an example*). US Patent #5359618 "High Efficiency VCSEL and Method of Fabrication" issued 25th October 1994.
- Dr. Lebby was recognized professionally as a **Fellow of IEEE (2005) and OSA (2007)** with his technical contributions to the field of optoelectronics.
- Dr. Lebby is a member of the Fellows review committee of IEEE.
- As an inventor Dr. Lebby has achieved **>230 issued utility patents with the USPTO.**
- As an inventor Dr. Lebby has ~80 published utility patent applications with the USPTO
- As an inventor Dr. Lebby has over 450 issued patents world-wide if international derivatives are counted.
- Dr. Lebby's novel laser-based device, packaging, modules designs led Motorola to sell their patent portfolio independently where a number of the patents have "very high licensing coefficients." Dr. Lebby was given a special award from the Chairman of Motorola for exemplary patent invention accomplishments in 1998 and **# 1 prolific inventor in Motorola's history**.
- **Over 60 publications** (www.linkedin.com/in/lebby)
- **Over 300 public media activities** (that include: Books, Chapters, Reports, Abstracts, Videos, Lectures, Speeches, Reviews, Courses, Talks, Invited Talks, Keynote Talks, Plenary Talks, Webinars, Interviews, Articles, etc.). See at www.linkedin.com/in/lebby
- Author of OIDA's **annual market optoelectronics report** and forecast (2009 version is over 600 pages), which receives international exposure and recognition. Regularly interacts with government agencies in Washington DC on photonics-based projects (DARPA, ARPA-E, NIH, NSF, DOE, NIST, DoD etc.). Typical chapters included: LEDs, laser diodes, fiber optic communications, sensors, displays, solar, green photonics, military photonics, and applications of photonics such as solid-state lighting, automotive, medical, etc.
- Is the recipient of a **2nd doctorate** (higher) from Bradford University, UK, and only the second in the universities history to receive a D.Eng from industry (rest being academia).

Professor (Dr. Dr.) Michael S. Lebby, B. Eng. (Hons), MBA, Ph.D., D. Eng, Fellow NAI, IEEE, OSA; C. Eng.
1 Hawthorne St., unit 25a, San Francisco, CA 94105, USA; mobile +1 717 839 7078; drmlebby@gmail.com

- **Intrepreneur** at: (i) Motorola: Co-founded Optobus division – VCSEL laser based parallel optical interconnect solution, and (ii) Intel: Co-founded the Intel optics division for silicon photonics where over $300M was initially invested for the division.
- **Entrepreneur**: Founded (and CEO) Ignis Optics Inc., a venture backed company (>$30M) that designed and manufactured 10Gbps fiber optic transceivers. Sold the company to Bookham (NASDAQ: BKHM) in 2003. Restructured OneChip Photonics (as CEO) through bankruptcy, and new VC-based funding. Assisted in the raising of >$50M VC funding as a member of BoD. Founded Oculi LLC and Obsidian Motors LLC.
- IEEE CPMT **Board of Governors** ('98- '02); IEEE Phoenix Waves and Devices Junior Engineer of the Year (1993); CPMT Distinguished lecturer (2000), CPMT technical committee (TC-10 & ECTC) 1991 to 2011
- Advised at **Board of Director** level for a number of technical start-ups
- **Chartered Engineer** (C.Eng) from IEE (UK). The chartered engineering status is equivalent to the US PE (professional engineer)

Professor (Dr. Dr.) Michael S. Lebby, B. Eng. (Hons), MBA, Ph.D., D. Eng, Fellow NAI, IEEE, OSA; C. Eng.
1 Hawthorne St., unit 25a, San Francisco, CA 94105, USA; mobile +1 717 839 7078; drmlebby@gmail.com

EXPERT WITNESS EXPERIENCE

Summary:
Depositions (total-to-date) = 48
Trial/Hearing/Court appearances = 17 (with IPR/PTAB 'paper trial', this total increases to 25)

Cited patent litigation case history: In essence, the following case history means that the expert doesn't have to disclose every minute detail in his expert report. He is allowed to disclose theories in the report and expand on them in his witness statement.

See also In The Matter Of Certain Light-Emitting Diode Products, Systems, And Components Thereof, Inv. No. 337-TA-1168, Order No. 34, 2020 WL 1026335 (Feb. 14, 2020) (denying motion *in limine* to preclude testimony where: "[t]he invalidity theories at issue were previously disclosed at least in Dr. Lebby's expert report, and LSG had the opportunity to test these theories at Dr. Lebby's deposition.")

See case # 81 below

Patent litigation cases engaged:

1. Active case work: 1Q2009 (March 24th 2009); *Testimony: US-China Economic and security review commission on the optoelectronics industry. US Congress, Capitol Hill;* Written statement on the status of the USA optoelectronics industry with aural cross-examination by the commission. Trial experience.
    a. Deposition: 0 (Cumulative total: 0)
    b. Trial/Hearing/Court appearance: 1 (Cumulative total: 1)
    c. Technology: Optoelectronics (optical storage, fiber optic communications, sensors, high power lasers, LED lighting, etc).
2. Active case work: 3Q2010-1Q2011; *Finisar Corp. v. Optical Communication Products Inc.*, No. 10-CV-05617 and No. 11-cv-00104 (retained by plaintiff - Morgan, Lewis & Bockius LLP).
    a. Deposition: 0 (Cumulative total: 0)
    b. Trial/Hearing/Court appearance: 0 (Cumulative total: 1)
    c. Technology: semiconductor lasers/VCSELs, fiber optic transceiver modules
3. Active case work: 1Q2011; *Ziptronix, Inc. v. OmniVision Technologies, Inc., Taiwan Semiconductor Manufacturing Company Ltd., and TSMC North America Corp.,* No. 11-CV-5235 (retained by plaintiff – Alston Bird LLP).
    a. Deposition: 0 (Cumulative total: 0)
    b. Trial/Hearing/Court appearance: 0 (Cumulative total: 1)
    c. Technology: CMOS image sensors; design and fabrication
4. Active case work: 3Q2011 to 3Q2012; *Certain Light-Emitting Diodes and Products Containing Same*, Inv. No. 337-TA-798 (USITC filed July 15, 2011) (retained by respondent Samsung – Covington & Burling LLP). Deposition (x2) and trial experience.
    a. Deposition: 3 (Cumulative total: 3)
    b. Trial/Hearing/Court appearance: 1 (Cumulative total: 2)
    c. Technology: LEDs, device design, color gamut, packaging, optical lensing, lead frames, surface mount packaging.
5. Active case work: 3Q2011 to 2Q2015; *Cheetah Omni, LLC v. Alcatel-Lucent USA Inc.*, No. 11-CV-390 (E.D. Tex. filed July 29, 2011) (retained by plaintiff – Brooks Kushman). Deposition experience (x2).
    a. Deposition: 1 (Cumulative total: 4)
    b. Trial/Hearing/Court appearance: 0 (Cumulative total: 2)
    c. Technology: Fiber optic networks, optical switches, ROADMs and optical filters (dielectric based).
6. Active case work: 4Q2012 to 3Q2014**;** *Finisar Corp. v. Cheetah Omni, LLC*, No. 11-CV-15625 (E.D. Mich. filed Dec. 23, 2011) (retained by defendant – Brooks Kushman). Deposition experience (x1).
    a. Deposition: 1 (Cumulative total: 5)
    b. Trial/Hearing/Court appearance: 0 (Cumulative total: 2)
    c. Technology: Wavelength optical switches, optical filters, and optical components, liquid crystal technology.
7. Active case work: 4Q2012 to 3Q2013**;** *Certain Optoelectronic Devices for Fiber Optic Communications, Components Thereof, and Prods. Containing the Same*, Inv. No. 337-TA-860 (USITC filed Sept. 24, 2012) (retained by respondent – Mellanox, IPtronics and FCI Inc and counsel Alston & Bird LLP). Deposition (x2) and trial experience.
    a. Deposition: 2 (Cumulative total: 7)

Professor (Dr. Dr.) Michael S. Lebby, B. Eng. (Hons), MBA, Ph.D., D. Eng, Fellow NAI, IEEE, OSA; C. Eng.
1 Hawthorne St., unit 25a, San Francisco, CA 94105, USA; mobile +1 717 839 7078; drmlebby@gmail.com

b. Trial/Hearing/Court appearance: 1 (Cumulative total: 3)
c. Technology: IC design, layout, and operation; especially laser driver chips for VCSELs. High speed laboratory testing.

8. Active case work: 3Q2014 to 2Q2015**;** *Microscan Sys., Inc. v. Cognex Corp.*, No. 14-CV-6952 (S.D.N.Y. filed Aug. 27, 2014) (retained by plaintiff – Morrison & Foerster LLP). Deposition (x1) and trail experience.
   a. Deposition: 1 (Cumulative total: 8)
   b. Trial/Hearing/Court appearance: 1 (Cumulative total: 4)
   c. Technology: Bar code scanners and associated optics such as imagers, lasers, LEDs, molded optics. Laboratory testing.
9. Active case work: 2Q2014 to 1Q2016**;** *Avago Techs. Fiber IP (Singapore) PTE Ltd. v. IPtronics Inc.*, No. 10-CV-2863 (N.D. Cal. filed June 29, 2010) (retained by respondent – Alston & Bird LLP).
   a. Deposition: 0 (Cumulative total: 8)
   b. Trial/Hearing/Court appearance: 0 (Cumulative total: 4)
   c. Technology: IC design, layout, and operation; especially laser driver chips for VCSELs. High speed laboratory testing.
10. Active case work: 1Q2015 to 3Q2015; *Regarding certain optical disc drives*, Inv. No. 337-TA-897 (USITC filed Oct. 21, 2013) (retained by respondent – O'Melveny & Myers LLP).
   a. Deposition: 0 (Cumulative total: 8)
   b. Trial/Hearing/Court appearance: 0 (Cumulative total: 4)
   c. Technology: CD, CVD, BluRay optical disk drives, optical components, laser diodes, and optical beam patterns. Laboratory testing of visible optics.
11. Active case work: 1Q2015 to 2Q2015; *BMW of N. Am., LLC v. Innovative Display Techs., LLC*, No. IPR2015-00933, IPR2015-00934 (P.T.A.B. filed Mar. 24, 2015) (retained by plaintiff – Crowell Moring LLP).
   a. Deposition: 0 (Cumulative total: 8)
   b. Trial/Hearing/Court appearance: 0 (Cumulative total: 4)
   c. Technology: LED backlights for vehicles; LED package and optical module/luminaire design.
12. Active case work: 1Q2015 to 2Q2015; *BMW of N. Am., LLC v. Innovative Display Techs., LLC*, No. IPR2015-00934 (P.T.A.B. filed Mar. 24, 2015) (retained by plaintiff – Crowell Moring LLP).
   a. Deposition: 0 (Cumulative total: 8)
   b. Trial/Hearing/Court appearance: 0 (Cumulative total: 4)
   c. Technology: LED backlights for vehicles; LED package and optical module/luminaire design.
13. Active case work: 1Q2015 to 3Q2016; *OneChip Photonics Inc.,* Pre-litigation IP Case No. TBD; (retained by plaintiff – Patent Monetization Inc. (PMI)).
   a. Deposition: 0 (Cumulative total: 8)
   b. Trial/Hearing/Court appearance: 0 (Cumulative total: 4)
   c. Technology: Photonic Integrated Circuits using InP (Indium Phosphide); lasers, detectors, waveguides, mux/demux, spot size converters.
14. Active case work: 2Q2016; *IDT v. Hyundai Motor Co.,* No. 14-CV-201 (E.D. Tex. filed May 4, 2015) (retained by defendant – DLA Piper LLP).
   a. Deposition: 0 (Cumulative total: 8)
   b. Trial/Hearing/Court appearance: 0 (Cumulative total: 4)
   c. Technology: LED devices, packages and modules for vehicles.
15. Active case work: 1Q2015 to 3Q2015; *Cree Inc., v. Honeywell Int'l Inc.,* No. 3:14-CV-737 (W.D. Wisc. filed Oct. 28, 2014) (retained by defendant - Arnold & Porter LLP). Deposition experience (x1).
   a. Deposition: 1 (Cumulative total: 9)
   b. Trial/Hearing/Court appearance: 0 (Cumulative total: 4)
   c. Technology: LEDs for mobile phones; LED epitaxial layers, device designs, optical lensing, packaging. Laboratory reverse engineering using TEM/SEM/EDAX etc.
16. Active case work: 2Q2015 to 4Q2015; *Trs. of Boston Univ. v. Everlight Elecs. Co.*, Nos. 12-CV-11935, 12-CV-12326, 12-CV-12330 (D. Mass. filed Oct. 17, 2012) (retained by plaintiff - Shore Chan DePumpo LLP). Deposition (x1) and trial experience.
   a. Deposition: 1 (Cumulative total: 10)
   b. Trial/Hearing/Court appearance: 1 (Cumulative total: 5)
   c. Technology: GaN buffer layers for LEDs, and associated technical marketing, sales and import process into USA.
17. Active case work: 3Q2015 to 3Q2016; *LG Elecs. Inc. v. Toshiba Samsung Storage Tech. Corp.*, No. 12-CV-1063 (D. Del. filed Aug. 22, 2012) and IPR2015-01659 (PTAB filed Jul. 31st 2015 (retained by plaintiff – DLA Piper & Nixon Law). IPR deposition (i.e. trial) experience (x1).
   a. Deposition: 1 (Cumulative total: 11)
   b. Trial/Hearing/Court appearance: 0 (Cumulative total: 5)
   c. IPR/PTAB trial/deposition: 1 (Cumulative total: 1)
   d. Technology: Optical storage using laser diodes, photodetectors and optical materials

Professor (Dr. Dr.) Michael S. Lebby, B. Eng. (Hons), MBA, Ph.D., D. Eng, Fellow NAI, IEEE, OSA; C. Eng.
1 Hawthorne St., unit 25a, San Francisco, CA 94105, USA; mobile +1 717 839 7078; drmlebby@gmail.com

18. Active case work: 3Q2015 to 3Q2016; *LG Elecs. Inc. v. Toshiba Samsung Storage Tech. Corp.*, No. 12-CV-1063 (D. Del. filed Aug. 22, 2012) and IPR2015-01642 (PTAB filed Jul. 30th 2015) (retained by plaintiff – DLA Piper & Nixon Law).
    a. Deposition: 0 (Cumulative total: 11)
    b. Trial/Hearing/Court appearance: 0 (Cumulative total: 5)
    c. IPR/PTAB trial/deposition: 0 (Cumulative total: 1)
    d. Technology: Optical storage using laser diodes, photodetectors and optical materials
19. Active case work: 3Q2015 to 3Q2016; *LG Elecs. Inc. v. Toshiba Samsung Storage Tech Corp.*, IPR2016-01677 (PTAB filed Aug. 24th 2016 (retained by plaintiff – DLA Piper & Nixon Law).
    a. Deposition: 0 (Cumulative total: 11)
    b. Trial/Hearing/Court appearance: 0 (Cumulative total: 5)
    c. IPR/PTAB trial/deposition: 0 (Cumulative total: 1)
    d. Technology: Optical storage using laser diodes, photodetectors and optical materials
20. Active case work: 3Q2015 to 3Q2016; *LG Elecs. Inc. v. Toshiba Samsung Storage Tech. Corp.*, IPR2015-01678 (PTAB filed Aug. 24th 2016) (retained by plaintiff – DLA Piper & Nixon Law).
    a. Deposition: 0 (Cumulative total: 11)
    b. Trial/Hearing/Court appearance: 0 (Cumulative total: 5)
    c. IPR/PTAB trial/deposition: 0 (Cumulative total: 1)
    d. Technology: Optical storage using laser diodes, photodetectors and optical materials
21. Active case work: 3Q2015 to 3Q2016; *LG Elecs. Inc. v. Toshiba Samsung Storage Tech. Corp.*, IPR2015-01644 (PTAB filed Jul. 30th 2015) (retained by plaintiff – DLA Piper & Nixon Law).
    a. Deposition: 0 (Cumulative total: 11)
    b. Trial/Hearing/Court appearance: 0 (Cumulative total: 5)
    c. IPR/PTAB trial/deposition: 0 (Cumulative total: 1)
    d. Technology: Optical storage using laser diodes, photodetectors and optical materials
22. Active case work: 3Q2015 to 3Q2016; *LG Elecs. Inc. v. Toshiba Samsung Storage Tech. Corp.*, IPR2015-01653 (PTAB filed Jul. 31st 2015) (retained by plaintiff – DLA Piper & Nixon Law).
    a. Deposition: 0 (Cumulative total: 11)
    b. Trial/Hearing/Court appearance: 0 (Cumulative total: 5)
    c. IPR/PTAB trial/deposition: 0 (Cumulative total: 1)
    d. Technology: Optical storage using laser diodes, photodetectors and optical materials
23. Active case work: 3Q2015; *Heptagon* Pre-litigation IPR petition; (retained by plaintiff – Proskaurer Rose LLP).
    a. Deposition: 0 (Cumulative total: 11)
    b. Trial/Hearing/Court appearance: 0 (Cumulative total: 5)
    c. IPR/PTAB trial/deposition: 0 (Cumulative total: 1)
    d. Technology: Proximity sensors using LEDs, photodetectors and innovative semiconductor packaging.
24. Active case work: 1Q2016 to 2Q2017; *Dentsply v. Am. Orthodontics Inc.,* No. 15-CV-1706 (D. Pa. filed Sept. 1, 2015) and IPR2016-01652 (PTAB filed Aug. 19th 2016) (retained by defendant – Godfrey Kahn LLP). IPR deposition (x1) experience.
    a. Deposition: 1 (Cumulative total: 12)
    b. Trial/Hearing/Court appearance: 0 (Cumulative total: 5)
    c. IPR/PTAB trial/deposition: 1 (Cumulative total: 2)
    d. Technology: High power lasers (YAG, CO2) to engrave and scribe dental orthodontic brackets.
25. Active case work: 2Q2016 to 2Q2017; *Koninklijke Philips N.V. v. Elect-tech Int'l (H.K.),* No. 14-CV-2737 (N.D. Cal. filed Aug. 12, 2015) (retained by plaintiff – Reed Smith LLP).
    a. Deposition: 0 (Cumulative total: 12)
    b. Trial/Hearing/Court appearance: 0 (Cumulative total: 5)
    c. IPR/PTAB trial/deposition: 0 (Cumulative total: 2)
    d. Technology: Trade secret MOCVD epitaxial growth techniques for high power GaN/InGaN LED technology
26. Active case work: 2Q2016 to 4Q2016; *Bluestone Innovations llc. v. E. Mishan & Co. Inc.,* Pre-litigation IP Case No. TBD; (retained by defendant - Notaro, Michalos, & Zaccaria P.C.).
    a. Deposition: 0 (Cumulative total: 12)
    b. Trial/Hearing/Court appearance: 0 (Cumulative total: 5)
    c. IPR/PTAB trial/deposition: 0 (Cumulative total: 2)
    d. Technology: GaN/InGaN LEDs on structured substrates with reverse engineering laboratory analysis.
27. Active case work: 3Q2016-1Q2017; *511 Innovations Inc. v. HTC Am., Inc.*, No. 15-CV-1524 (E.D. Tex. Filed June 30, 2016) (retained by plaintiff – The Davis Firm). Deposition (x2)
    a. Deposition: 2 (Cumulative total: 14)
    b. Trial/Hearing/Court appearance: 0 (Cumulative total: 5)
    c. IPR/PTAB trial/deposition: 0 (Cumulative total: 2)
    d. Technology: Proximity sensors for mobile phones.
28. Active case work: 3Q2016-4Q2016; *Mellanox Techs. Ltd. v. Methode Elecs. Inc.,* No. 15-CV-3730 (N.D. Cal. filed Aug. 16, 2015) (retained by plaintiff – Alston & Bird).

Professor (Dr. Dr.) Michael S. Lebby, B. Eng. (Hons), MBA, Ph.D., D. Eng, Fellow NAI, IEEE, OSA; C. Eng.
1 Hawthorne St., unit 25a, San Francisco, CA 94105, USA; mobile +1 717 839 7078; drmlebby@gmail.com

a. Deposition: 0 (Cumulative total: 14)
b. Trial/Hearing/Court appearance: 0 (Cumulative total: 5)
c. IPR/PTAB trial/deposition: 0 (Cumulative total: 2)
d. Technology: Fiber optic transceiver modules.

29. Active case work: 4Q2016-1Q2017; *Novanta Inc., v Iradion Inc.*, No. 15-CV-01033 (D. Del. filed Nov. 9, 2015) (retained by defendant – Barnes and Thornburg LLP).
    a. Deposition: 0 (Cumulative total: 14)
    b. Trial/Hearing/Court appearance: 0 (Cumulative total: 5)
    c. IPR/PTAB trial/deposition: 0 (Cumulative total: 2)
    d. Technology: High power gas laser design and operation.
30. Active case work: 1Q2017-1Q2017; *Optolum Inc., v Cree Inc.*, No. 16-CV-03828; (D. Az. filed Nov. 3, 2016) (retained by defendant – Jones Day).
    a. Deposition: 0 (Cumulative total: 14)
    b. Trial/Hearing/Court appearance: 0 (Cumulative total: 5)
    c. IPR/PTAB trial/deposition: 0 (Cumulative total: 2)
    d. Technology: LED packaging for illumination.
31. Active case work: 1Q2017-4Q2017; *Polygroup Macau Ltd (BVI)., v Willlis Electric Co., Ltd.,* 15-CV-00552 (W.D. NC. Filed: Apr 21st 2016), (retained by plaintiff - Troutman Sanders LLP). Deposition experience (x2)
    a. Deposition: 2 (Cumulative total: 16)
    b. Trial/Hearing/Court appearance: 0 (Cumulative total: 5)
    c. IPR/PTAB trial/deposition: 1 (Cumulative total: 3)
    d. Technology: Electrical connector, IC, and LED light product design.
32. Active case work: 1Q2017-4Q2017; *Polygroup Macau Ltd (BVI)., v Willlis Electric Co., Ltd.,* IPR2017-00309 (PTAB filed Nov. 21st 2017), (retained by plaintiff - Troutman Sanders LLP).
    a. Deposition: 0 (Cumulative total: 16)
    b. Trial/Hearing/Court appearance: 0 (Cumulative total: 5)
    c. IPR/PTAB trial/deposition: 0 (Cumulative total: 3)
    d. Technology: Electrical connector, IC, and LED light product design.
33. Active case work: 1Q2017-4Q2017; *Polygroup Macau Ltd (BVI)., v Willlis Electric Co., Ltd.,* IPR2017-00330 (PTAB filed Nov. 24th 2017), (retained by plaintiff - Troutman Sanders LLP).
    a. Deposition: 0 (Cumulative total: 16)
    b. Trial/Hearing/Court appearance: 0 (Cumulative total: 5)
    c. IPR/PTAB trial/deposition: 0 (Cumulative total: 3)
    d. Technology: Electrical connector, IC, and LED light product design.
34. Active case work: 1Q2017-4Q2017; *Polygroup Macau Ltd (BVI)., v Willlis Electric Co., Ltd.,* IPR2017-00331 (PTAB filed Nov. 24th 2017), (retained by plaintiff - Troutman Sanders LLP).
    a. Deposition: 0 (Cumulative total: 16)
    b. Trial/Hearing/Court appearance: 0 (Cumulative total: 5)
    c. IPR/PTAB trial/deposition: 0 (Cumulative total: 3)
    d. Technology: Electrical connector, IC, and LED light product design.
35. Active case work: 1Q2017-4Q2017; *Polygroup Macau Ltd (BVI)., v Willlis Electric Co., Ltd.,* IPR2017-00332 (PTAB filed Nov. 25th 2017), (retained by plaintiff - Troutman Sanders LLP).
    a. Deposition: 0 (Cumulative total: 16)
    b. Trial/Hearing/Court appearance: 0 (Cumulative total: 5)
    c. IPR/PTAB trial/deposition: 0 (Cumulative total: 3)
    d. Technology: Electrical connector, IC, and LED light product design.
36. Active case work: 1Q2017-4Q2017; *Polygroup Macau Ltd (BVI)., v Willlis Electric Co., Ltd.,* IPR2017-00334 (PTAB filed Nov. 25th 2017), (retained by plaintiff - Troutman Sanders LLP).
    a. Deposition: 0 (Cumulative total: 16)
    b. Trial/Hearing/Court appearance: 0 (Cumulative total: 5)
    c. IPR/PTAB trial/deposition: 0 (Cumulative total: 3)
    d. Technology: Electrical connector, IC, and LED light product design.
37. Active case work: 1Q2017-4Q2017; *Polygroup Macau Ltd (BVI)., v Willlis Electric Co., Ltd.,* IPR2017-00335 (PTAB filed Nov. 25th 2017), (retained by plaintiff - Troutman Sanders LLP).
    a. Deposition: 0 (Cumulative total: 16)
    b. Trial/Hearing/Court appearance: 0 (Cumulative total: 5)
    c. IPR/PTAB trial/deposition: 0 (Cumulative total: 3)
    d. Technology: Electrical connector, IC, and LED light product design.
38. Active case work: 1Q2017-4Q2017; *Macom Technology Solutions Holdings Inc., and Nitronex, LLC., v. Infineon Technologies AG and Infineon Technologies North American Corp.*, 16-CV-02859 (C.D. Ca. filed Apr 26, 2016) (retained by plaintiff – Baker Botts LLP).
    a. Deposition: 0 (Cumulative total: 16)
    b. Trial/Hearing/Court appearance: 0 (Cumulative total: 5)
    c. IPR/PTAB trial/deposition: 0 (Cumulative total: 3)

Professor (Dr. Dr.) Michael S. Lebby, B. Eng. (Hons), MBA, Ph.D., D. Eng, Fellow NAI, IEEE, OSA; C. Eng.
1 Hawthorne St., unit 25a, San Francisco, CA 94105, USA; mobile +1 717 839 7078; drmlebby@gmail.com

   d. Technology: High performance GaN based RF FET device design and operation.

39. Active case work: 1Q2017-1Q2017; *Quanergy Systems, Inc. v. Velodyne LiDAR, Inc.* (16-cv-05251; N.D. Ca. filed: Sep 13th 2016 (retained by plaintiff Velodyne) - Latham & Watkins LLP
    a. Deposition: 0 (Cumulative total: 16)
    b. Trial/Hearing/Court appearance: 0 (Cumulative total: 5)
    c. IPR/PTAB trial/deposition: 0 (Cumulative total: 3)
    d. Technology: Laser/photodetector based LIDAR design and operation for self-driving vehicles.
40. Active case work: 1Q2017-2Q2017; *The Chamberlain Group Inc., v. Techtronic Industries Co., Ltd, Techtronic Industries North America et al.,* Challenge to U.S Patent No. 7,862,209 (retained by plaintiff – The Chamberlain Group) – Morgan, Lewis & Brockius, LLP.
    a. Deposition: 0 (Cumulative total: 16)
    b. Trial/Hearing/Court appearance: 0 (Cumulative total: 5)
    c. IPR/PTAB trial/deposition: 0 (Cumulative total: 3)
    d. Technology: LED based luminaire design for lighting.
41. Active case work: 1Q2017-1Q2018; *Uber Technologies Inc., Ottomottto LLC., Otto Trucking LLC., v. Waymo LLC (Google),* 17-CV-00939 (N.D. Ca filed: Mar 10th, 2017), (retained by defendant Uber Technologies Inc.) – Morrison and Foerster LLP. Deposition experience (x3) and trial experience (case settled at trial).
    a. Deposition: 3 (Cumulative total: 19)
    b. Trial/Hearing/Court appearance: 1 (Cumulative total: 6)
    c. IPR/PTAB trial/deposition: 0 (Cumulative total: 3)
    d. Technology: Optical and electrical device, optics, and package designs for LIDAR based self-driving vehicles.
42. Active case work: 2Q2017-2Q2017; *Heptagon v. ST Mircoelectronics* IPR petition; (retained by plaintiff Heptagon) – Proskaurer Rose LLP).
    a. Deposition: 0 (Cumulative total: 19)
    b. Trial/Hearing/Court appearance: 0 (Cumulative total: 6)
    c. IPR/PTAB trial/deposition: 0 (Cumulative total: 3)
    d. Technology: Optoelectronic based proximity sensors using LEDs and photodetectors.
43. Active case work: 2Q2017-2Q2018; *AT&T Inc., v. Sycamore Holdings LLC.,* 16-CV-00588 (E. D. Tx filed: Jun 6th 2016); (retained by defendant AT&T Inc.) - Kirkland and Ellis LLP. Deposition experience (x1)
    a. Deposition: 1 (Cumulative total: 20)
    b. Trial/Hearing/Court appearance: 0 (Cumulative total: 6)
    c. IPR/PTAB trial/deposition: 0 (Cumulative total: 3)
    d. Technology: Coding designs of optical digital signals for high performance optical networks.
44. Active case work: 2Q2017 – 4Q2017; *Clearfield Inc., v. CommScope, ADC, Tyco, and TE Connectivity,* 17-CV-00307 (D.C. Minn. filed Jan 31st 2017); (retained by defendant Clearfield, Inc.) – Pepper Hamilton LLP
    a. Deposition: 0 (Cumulative total: 20)
    b. Trial/Hearing/Court appearance: 0 (Cumulative total: 6)
    c. IPR/PTAB trial/deposition: 0 (Cumulative total: 3)
    d. Technology: Fiber optic connectors, panels, and distribution switches using optoelectronic components.
45. Active case work: 2Q2017 – 4Q2017; *Clearfield Inc., v. CommScope, ADC, Tyco, and TE Connectivity,* IPR2017-02122 (PTAB filed Sep. 15th 2017); (retained by defendant Clearfield, Inc.) – Pepper Hamilton LLP
    a. Deposition: 0 (Cumulative total: 20)
    b. Trial/Hearing/Court appearance: 0 (Cumulative total: 6)
    c. IPR/PTAB trial/deposition: 0 (Cumulative total: 3)
    d. Technology: Fiber optic connectors, panels, and distribution switches using optoelectronic components.
46. Active case work: 2Q2017 – 4Q2017; *Clearfield Inc., v. CommScope, ADC, Tyco, and TE Connectivity,* IPR2018-00003 (PTAB filed Oct. 6th 2017); (retained by defendant Clearfield, Inc.) – Pepper Hamilton LLP
    a. Deposition: 0 (Cumulative total: 20)
    b. Trial/Hearing/Court appearance: 0 (Cumulative total: 6)
    c. IPR/PTAB trial/deposition: 0 (Cumulative total: 3)
    d. Technology: Fiber optic connectors, panels, and distribution switches using optoelectronic components.
47. Active case work: 2Q2017 – 4Q2017; *Clearfield Inc., v. CommScope, ADC, Tyco, and TE Connectivity,* IPR2018-00154 (PTAB filed Nov. 7th 2017); (retained by defendant Clearfield, Inc.) – Pepper Hamilton LLP
    a. Deposition: 0 (Cumulative total: 20)
    b. Trial/Hearing/Court appearance: 0 (Cumulative total: 6)
    c. IPR/PTAB trial/deposition: 0 (Cumulative total: 3)
    d. Technology: Fiber optic connectors, panels, and distribution switches using optoelectronic components.
48. Active case work: 4Q2016-2Q2017; *Antunes Inc.,* Pre-litigation IP patent review; Case No. TBD; (retained by plaintiff – Antunes Inc. and Chapman Spingola LLP).

Professor (Dr. Dr.) Michael S. Lebby, B. Eng. (Hons), MBA, Ph.D., D. Eng, Fellow NAI, IEEE, OSA; C. Eng.
1 Hawthorne St., unit 25a, San Francisco, CA 94105, USA; mobile +1 717 839 7078; drmlebby@gmail.com

a. Deposition: 0 (Cumulative total: 20)
b. Trial/Hearing/Court appearance: 0 (Cumulative total: 6)
c. IPR/PTAB trial/deposition: 0 (Cumulative total: 3)
d. Technology: High power grating surface emitter laser diodes, and associated packaging and device design for laser-based cooking ovens.

49. Active case work: 1Q2017-2Q2017; *Core Optical Technologies LLC. v. Fujitsu Network Communications, Inc.,* 16-CV-00437 (C. D. Ca filed: Mar 7th 2016); (retained by defendant Fujitsu Network Communications) – Morrison & Foerster LLP.
    a. Deposition: 0 (Cumulative total: 20)
    b. Trial/Hearing/Court appearance: 0 (Cumulative total: 6)
    c. IPR/PTAB trial/deposition: 0 (Cumulative total: 3)
    d. Technology: Fiber optic based optical communications for coherent technologies
50. Active case work: 3Q2017-4Q2018; *Oyster Optics LLC v. Coriant America, et al*, 16-CV-01302 (E. D. Tx filed: Nov 24th 2016); (retained by plaintiff Oyster Optics LLC) – Russ August & Kabat LLP.
    a. Deposition: 1 (Cumulative total: 21)
    b. Trial/Hearing/Court appearance: 0 (Cumulative total: 6)
    c. IPR/PTAB trial/deposition: 0 (Cumulative total: 3)
    d. Technology: Fiber optic based optoelectronic semiconductor component design and operation.
51. Active case work: 3Q2017-4Q2018; *Oyster Optics LLC v. Infinera, Alcatel-Lucent, Fujitsu, Cisco Systems, Huawei,* 16-CV-01295, 16-CV-01297, 16-CV-01299, 16-CV-01301, 16-CV-01303 (E. D. Tx filed: Nov 24th 2016); (retained by plaintiff Oyster Optics LLC) – Russ August & Kabat LLP. Deposition experience (x1).
    a. Deposition: 1 (Cumulative total: 22)
    b. Trial/Hearing/Court appearance: 0 (Cumulative total: 6)
    c. IPR/PTAB trial/deposition: 0 (Cumulative total: 3)
    d. Technology: Fiber optic based optoelectronic semiconductor component design and operation.
52. Active case work: 3Q2017-4Q2017; *Olympus*, Pre-litigation IP and Due Diligence; Case No. TBD; (retained by plaintiff – Olympus and Fish & Richardson P.C.)
    a. Deposition: 0 (Cumulative total: 22)
    b. Trial/Hearing/Court appearance: 0 (Cumulative total: 6)
    c. IPR/PTAB trial/deposition: 0 (Cumulative total: 3)
    d. Technology: High volume, low cost optical lens and optics technology.
53. Active case work: 3Q2017-1Q2018; *Honeywell International, Inc et al v. Code Corporation et al.*, ITC No 337-TA-1061 (filed Jun 28th 2017), "Certain barcode readers, scan engines, products containing the same, and components thereof," (retained by respondent – Honeywell and Alston and Bird LLP
    a. Deposition: 1 (Cumulative total: 23)
    b. Trial/Hearing/Court appearance: 0 (Cumulative total: 6)
    c. IPR/PTAB trial/deposition: 0 (Cumulative total: 3)
    d. Technology: Bar-code scanners and associated optical/optoelectronic component performance and operation.
54. Active case work: 4Q2017-1Q2019; *Godo Kaisha IP Bridge 1 v. Intel Corp.*, 17-CV-00676 (filed Sep 29th 2017), (retained by plaintiff – Godo Kaisha IP Bridge 1) - Ropes and Gray, LLP.
    a. Deposition: 0 (Cumulative total: 23)
    b. Trial/Hearing/Court appearance: 0 (Cumulative total: 6)
    c. IPR/PTAB trial/deposition: 0 (Cumulative total: 3)
    d. Technology: Fabrication, design, and reverse engineering of silicon-based FET ICs.
55. Active case work: 4Q2017-3Q2018; *Maxim Integrated Products, Inc. and Volterra Semiconductor LLC., v. Silicon Mitus Inc., and Silicon Mitus Technology Inc.*, 17-CV-03507 (N. D. Ca: filed Jun 16th 2017), (retained by defendant Silicon Mitus) – Pillsbury Winthrop Shaw Pittman, LLP. (Deposition and trial experience X1)
    a. Deposition: 1 (Cumulative total: 24)
    b. Trial/Hearing/Court appearance: 1 (Cumulative total: 7)
    c. IPR/PTAB trial/deposition: 0 (Cumulative total: 3)
    d. Technology: Fabrication, design, characterization, and packaging of silicon-based FET ICs for power applications
56. Active case work: 2Q2018-3Q2018; *Cree, Inc., v. Document Security Systems Inc.,* 17-CV-4263 (C.D. Ca filed: Apr 17th 2017), (retained by defendant Cree Inc.) - Jones Day, LLP
    a. Deposition: 0 (Cumulative total: 24)
    b. Trial/Hearing/Court appearance: 0 (Cumulative total: 7)
    c. IPR/PTAB trial/deposition: 0 (Cumulative total: 3)
    d. Technology: Design and packaging of high brightness GaN based LEDs
57. Active case work: 2Q2018-2Q2018; Weisen v., Ram Telecom International (RTI)., CGC-16-554331 (Sup Ca: filed 3rd May 2017) (retained by plaintiff Weisen, J) - Yetter Coleman, LLP. Deposition experience (x1) and trial experience (x1).
    a. Deposition: 1 (Cumulative total: 25)
    b. Trial/Hearing/Court appearance: 1 (Cumulative total: 8)

Professor (Dr. Dr.) Michael S. Lebby, B. Eng. (Hons), MBA, Ph.D., D. Eng, Fellow NAI, IEEE, OSA; C. Eng.
1 Hawthorne St., unit 25a, San Francisco, CA 94105, USA; mobile +1 717 839 7078; drmlebby@gmail.com

c. IPR/PTAB trial/deposition: 0 (Cumulative total: 3)
d. Technology: Submarine and subsea fiber optic cables: technology, markets, economic impact, and history.

58. Active case work: 2Q2018-3Q2018; *Seoul Semiconductor., v. Document Security Systems Inc.,* 17-CV-00981 (C.D. Ca filed: Apr 17th 2017), (retained by defendant Seoul Semiconductor) - Latham and Watkins LLP
    a. Deposition: 1 (Cumulative total: 26)
    b. Trial/Hearing/Court appearance: 0 (Cumulative total: 8)
    c. IPR/PTAB trial/deposition: 0 (Cumulative total: 3)
    d. Technology: Design and packaging of high brightness GaN based LEDs
59. Active case work: 3Q2018-4Q2018; *NEC Display Solutions Inc., and NEC Display Solutions of America, Inc., v. Ultravision.,* ITC Case# 337-TA-1114 (filed 24th May 2018), "Certain Modular LED Display Panels and Components Thereof," (retained by respondent Jones Day, LLP)
    a. Deposition: 0 (Cumulative total: 26)
    b. Trial/Hearing/Court appearance: 0 (Cumulative total: 8)
    c. IPR/PTAB trial/deposition: 0 (Cumulative total: 3)
    d. Technology: Large LED Panels, LED displays, LED modular panel design, LED thermal engineering and color displays for outdoor environments.
60. Active case work: 3Q2018-3Q2018; IFT (Innovative Foundry Technologies) (pre-lit), retained by plaintiff Mintz Levin, Cohen, Ferris, Glovsky, and Popeo PC.)
    a. Deposition: 0 (Cumulative total: 26)
    b. Trial/Hearing/Court appearance: 0 (Cumulative total: 8)
    c. IPR/PTAB trial/deposition: 0 (Cumulative total: 3)
    d. Technology: CMOS device (inc FinFETs) and IC fabrication techniques at 40, 28, 20, 16nm nodes.
61. Active case work: 4Q2018-2Q2019; *Eidolon Optical LLC., v. Haag-Streit AG.,* IPR2018-01311, (retained by patent owner Eidolon Optical LLC) - McInnes & McLane LLP
    a. Deposition: 0 (Cumulative total: 26)
    b. Trial/Hearing/Court appearance: 0 (Cumulative total: 8)
    c. IPR/PTAB trial/deposition: 1 (Cumulative total: 4)
    d. Technology: High brightness InGaAlP, GaP, AlGaAs, and GaN/InGaN based LEDs for use in medical instruments
62. Active case work: 3Q2018-3Q2018; *Voxtel Inc., v. Joseph Lachapelle & Luminar Technologies Inc.,* 18-CV-27356 (D. Or. filed: Dec 18th 2017), (retained by plaintiff Voxtel Inc.) - Ater Wynne LLP
    a. Deposition: 0 (Cumulative total: 26)
    b. Trial/Hearing/Court appearance: 0 (Cumulative total: 8)
    c. IPR/PTAB trial/deposition: 0 (Cumulative total: 4)
    d. Technology: LIDAR optical and electronic component and system technology
63. Active case work: 3Q2018-1Q2019; *Alta Devices, v. LG Electronics Inc.,* 18-CV-00404 (N.D. Ca. filed: May 7th 2018), (retained by defendant LG Electronics Inc.) - Hogan Lovells LLP
    a. Deposition: 0 (Cumulative total: 26)
    b. Trial/Hearing/Court appearance: 0 (Cumulative total: 8)
    c. IPR/PTAB trial/deposition: 0 (Cumulative total: 4)
    d. Technology: Trade Secret GaAs based solar cell design, fabrication, manufacturing, and device performance
64. Active case work: 3Q2018-3Q18; *Opterna AM Inc., v. Commscope Technologies Inc.,* Pre-litigation preparation, (retained by defendant Opterna AM Inc.) - Sterne Kessler LLP
    a. Deposition: 0 (Cumulative total: 26)
    b. Trial/Hearing/Court appearance: 0 (Cumulative total: 8)
    c. IPR/PTAB trial/deposition: 0 (Cumulative total: 4)
    d. Technology: Fiber optic connectors, panels, and distribution switches using optoelectronic components.
65. Active case work: 4Q2018 – 1Q2019; *U.D. Electronic Corp., v. Pulse Electronics, Inc.,* Preparation for IPR filing: IPR2019-00508 (PTAB filed Dec 26th 2018); and support for 18-CV-00373 (S.D. Ca. filed: Feb 16th 2018) (retained by petitioner U. D. Electronic Corp.) – Procopio, Cory, Hargreaves and Savitch LLP
    a. Deposition: 0 (Cumulative total: 26)
    b. Trial/Hearing/Court appearance: 0 (Cumulative total: 8)
    c. IPR/PTAB trial/deposition: 0 (Cumulative total: 4)
    d. Technology: Electrical and fiber optic connectors, panels, and distribution switches using both electronic and optoelectronic components.
66. Active case work: 4Q2018 – 1Q2019; *U.D. Electronic Corp., v. Pulse Electronics, Inc.,* Preparation for IPR filing: IPR2019-00515 (PTAB filed Dec 31st 2018); and support for 18-CV-00373 (S.D. Ca. filed: Feb 16th 2018) (retained by petitioner U. D. Electronic Corp.) – Procopio, Cory, Hargreaves and Savitch LLP
    a. Deposition: 0 (Cumulative total: 26)
    b. Trial/Hearing/Court appearance: 0 (Cumulative total: 8)
    c. IPR/PTAB trial/deposition: 0 (Cumulative total: 4)

Professor (Dr. Dr.) Michael S. Lebby, B. Eng. (Hons), MBA, Ph.D., D. Eng, Fellow NAI, IEEE, OSA; C. Eng.
1 Hawthorne St., unit 25a, San Francisco, CA 94105, USA; mobile +1 717 839 7078; drmlebby@gmail.com

d. Technology: Electrical and fiber optic connectors, panels, and distribution switches using both electronic and optoelectronic components.

67. Active case work: 4Q2018 – 1Q2019; *U.D. Electronic Corp., v. Pulse Electronics, Inc.,* Preparation for IPR filing: IPR2019-00262 (PTAB filed Nov 9th 2018); and support for 18-CV-00373 (S.D. Ca. filed: Feb 16th 2018) (retained by petitioner U. D. Electronic Corp.) – Procopio, Cory, Hargreaves and Savitch LLP
    a. Deposition: 0 (Cumulative total: 26)
    b. Trial/Hearing/Court appearance: 0 (Cumulative total: 8)
    c. IPR/PTAB trial/deposition: 0 (Cumulative total: 4)
    d. Technology: Electrical and fiber optic connectors, panels, and distribution switches using both electronic and optoelectronic components.
68. Active case work: 4Q2018 – 1Q2019; *U.D. Electronic Corp., v. Pulse Electronics, Inc.,* Preparation for IPR filing: IPR2019-00511 (PTAB filed Dec 28th 2018); and support for 18-CV-00373 (S.D. Ca. filed: Feb 16th 2018) (retained by petitioner U. D. Electronic Corp.) – Procopio, Cory, Hargreaves and Savitch LLP
    a. Deposition: 0 (Cumulative total: 26)
    b. Trial/Hearing/Court appearance: 0 (Cumulative total: 8)
    c. IPR/PTAB trial/deposition: 0 (Cumulative total: 4)
    d. Technology: Electrical and fiber optic connectors, panels, and distribution switches using both electronic and optoelectronic components.
69. Active case work: 4Q2018 – 1Q2019; *Semiconductor Energy Laboratory Co. Ltd., v. Bluehouse Global Ltd.,* Preparation for IPR filing: IPR2018-01405 (PTAB filed Jul 18th 2018); (retained by patent owner SEL Co Ltd.) – Robinson Intellectual Law Office, P.C. (Counsel represented by Fish and Richardson LLP).
    a. Deposition: 0 (Cumulative total: 26)
    b. Trial/Hearing/Court appearance: 0 (Cumulative total: 8)
    c. IPR/PTAB trial/deposition: 0 (Cumulative total: 4)
    d. Technology: Semiconductor displays using active matrix LCD and thin film transistor technology. Design, fabrication, and circuit layout.
70. Active case work: 4Q2018 – 1Q2019; *Semiconductor Energy Laboratory Co. Ltd., v. Bluehouse Global Ltd.,* Preparation for IPR filing: IPR2018-01393 (PTAB filed Jul 13th 2018); (retained by patent owner SEL Co Ltd.) – Robinson Intellectual Law Office, P.C. (Counsel represented by Fish and Richardson LLP)
    a. Deposition: 0 (Cumulative total: 26)
    b. Trial/Hearing/Court appearance: 0 (Cumulative total: 8)
    c. IPR/PTAB trial/deposition: 0 (Cumulative total: 4)
    d. Technology: Semiconductor displays using active matrix LCD and thin film transistor technology. Design and fabrication technology.
71. Active case work: 4Q2018 - 1Q2019; *The Sloan Company dba SloanLED, v. Principle Lighting Group, LLC.,* 18-CV-06449 (C.D. Ca. filed: Jul 26th 2018), (retained by defendant SloanLED.) - Ferguson Case Orr Paterson LLP
    a. Deposition: 0 (Cumulative total: 26)
    b. Trial/Hearing/Court appearance: 1 (Cumulative total: 9)
    c. IPR/PTAB trial/deposition: 0 (Cumulative total: 4)
    d. Technology: LED lighting, LED luminaires, LED performance, electrical and mechanical design and construction.
72. Active case work: 1Q2019 - 1Q2019; *HTC Corporation, v. Lemire Illumination Technologies.,* 18-CV-00021 (E.D. Tx. filed: Jan 21st 2018), (retained by defendant HTC Corporation) - Perkins Coie LLP
    a. Deposition: 0 (Cumulative total: 26)
    b. Trial/Hearing/Court appearance: 0 (Cumulative total: 9)
    c. IPR/PTAB trial/deposition: 0 (Cumulative total: 4)
    d. Technology: LEDs for mobile phones
73. Active case work: 1Q2019 - 2Q2019; *Frys Electronics, v. Seoul Semiconductor Co, and Seoul Viosys Co.,,* 2:18-CV-00386-JRG (E. D. Tx. filed: Nov 20th 2018), (retained by defendant Frys Electronics) - Lamkin IP Defense
    a. Deposition: 0 (Cumulative total: 26),
    b. Trial/Hearing/Court appearance: 0 (Cumulative total: 9)
    c. IPR/PTAB trial/deposition: 0 (Cumulative total: 4)
    d. Technology: LED chips, LED packaging, LED lenses, LED luminaires, backlights, displays, and televisions/monitors
74. Active case work: 2Q2019 – 4Q2019; *Hanwha Q CELLS & Advance Materials Corporation, v. JinkoSolar, LONGi Solar, REC Solar,* ITC 337-TA-1151 (filed: Apr 4th 2019), ("Certain Photovoltaic Cells and Products Containing Same,"), retained by patent owner and plaintiff Hanwha Q CELLS) - Covington and Burling LLP
    a. Deposition: 2 (Cumulative total: 28)
    b. Trial/Hearing/Court appearance: 0 (Cumulative total: 9)
    c. IPR/PTAB trial/deposition: 0 (Cumulative total: 4)
75. Active case work: 2Q2019-3Q2019; *Hanwha Q CELLS & Advance Materials Corporation, v. JinkoSolar and affiliates,* 19-CV-00450 (D. Del. filed: Jan 21st 2018), (retained by patent owner and plaintiff Hanwha Q CELLS) - Covington and Burling LLP

Professor (Dr. Dr.) Michael S. Lebby, B. Eng. (Hons), MBA, Ph.D., D. Eng, Fellow NAI, IEEE, OSA; C. Eng.
1 Hawthorne St., unit 25a, San Francisco, CA 94105, USA; mobile +1 717 839 7078; drmlebby@gmail.com

a. Deposition: 0 (Cumulative total: 28)
b. Trial/Hearing/Court appearance: 0 (Cumulative total: 9)
c. IPR/PTAB trial/deposition: 0 (Cumulative total: 4)
d. Technology: Silicon solar cells and materials analysis of passivation layers

76. Active case work: 2Q2019-2Q2019; *Oyster Optics LLC v. Infinera Inc,* 2:18-CV-00206 (E. D. Tx filed: May 15th 2018); (retained by plaintiff Oyster Optics LLC) – Russ August & Kabat LLP.
    a. Deposition: 0 (Cumulative total: 28)
    b. Trial/Hearing/Court appearance: 0 (Cumulative total: 9)
    c. IPR/PTAB trial/deposition: 0 (Cumulative total: 4)
    d. Technology: Fiber optic based optoelectronic semiconductor component design and operation.
77. Active case work: 2Q2019 – 2Q2019; *Nichia Corporation & Osram Opto Semiconductors Inc., v. Lighting Science Group Corp.,* IPR filing: IPR2019-01259 (PTAB filed Jun 28th 2019); (retained by petitioner Nichia and Osram Opto.) – Shearman and Sterling, LLP
    a. Deposition: 0 (Cumulative total: 28)
    b. Trial/Hearing/Court appearance: 0 (Cumulative total: 9)
    c. IPR/PTAB trial/deposition: 0 (Cumulative total: 4)
    d. Technology: LED chips, LED packaging and ceramic thermal heat sinking technology.
78. Active case work: 2Q2019 – 3Q2019; *Nichia Corporation v. Lighting Science Group Corp.,* 2:17-CV-08849 (C. D. Ca filed Jul 12th 2017); (retained by defendant Nichia) – Shearman and Sterling, LLP
    a. Deposition: 0 (Cumulative total: 28)
    b. Trial/Hearing/Court appearance: 0 (Cumulative total: 9)
    c. IPR/PTAB trial/deposition: 0 (Cumulative total: 4)
    d. Technology: LED chips, LED packaging and ceramic thermal heat sinking technology
79. Active case work: 3Q2019-3Q2019; *Applied Optoelectronics Inc v. Class Action Lawsuit,* 4:17-CV-02399 (S. D. Tx filed: Mar 6th 2018); (retained by plaintiff Class Action Lawsuit) – Levi and Korsinsky, LLP
    a. Deposition: 0 (Cumulative total: 28)
    b. Trial/Hearing/Court appearance: 0 (Cumulative total: 9)
    c. IPR/PTAB trial/deposition: 0 (Cumulative total: 4)
    d. Technology: Fiber optic based optoelectronic semiconductor components, transceivers, and sub-systems.
80. Active case work: 3Q2019-3Q2019; *DNA Motor v. Kuen Hwa Traffic Industrial Co.,* 18-CV-05664 (C. D. Ca filed: Jan 15th 2019); (defendant DNA Motor) – Elizabeth Yang, Law and Mediation Office
    a. Deposition: 0 (Cumulative total: 28)
    b. Trial/Hearing/Court appearance: 0 (Cumulative total: 9)
    c. IPR/PTAB trial/deposition: 0 (Cumulative total: 4)
    d. Technology: LED design patent, and the design of an aftermarket LED based headlight assembly for an automobile.
81. Active case work: 3Q2019 – 1Q2020; *Nichia Corporation, Osram Opto Semiconductors Inc., Philips Lumileds, GE Consumer Lighting, Cree, and Signify v. Lighting Science Group Corp.,* ITC 337-TA-1168 (filed: Apr 30th 2019), ("Certain Light-Emitting-Diode products, systems, and components thereof (III)") (retained by respondents Nichia, Osram Optoelectronics, Philips Lumileds, GE Consumer Lighting, Cree Hong Kong., Signify Corp.) – Shearman and Sterling, LLP
    a. Deposition: 1 (Cumulative total: 29)
    b. Trial/Hearing/Court appearance: 1 (Cumulative total: 10)
    c. IPR/PTAB trial/deposition: 0 (Cumulative total: 4)
    d. Technology: LED chips, LED packaging and ceramic thermal heat sinking technology (LTCC).
82. Active case work: 4Q2019 – 1Q2020; *Amazon.com Inc, Bed, Bath and Beyond, IKEA, Target, and Walmart Inc., v. Regents of the University of California,* ITC 337-TA-1172 (filed: July 30th 2019), ("Certain Filament Light-Emitting-Diodes and products containing same") (retained by respondents Amazon.com Inc, Bed, Bath and Beyond, IKEA, Target, and Walmart Inc.) – Morrison and Foerster, LLP
    a. Deposition: 2 (Cumulative total: 31)
    b. Trial/Hearing/Court appearance: 0 (Cumulative total: 10)
    c. IPR/PTAB trial/deposition: 0 (Cumulative total: 4)
    d. Technology: LED chips, LED packaging and light bulb filaments with transparent sub-mounts.
83. Active case work: 4Q2019 – 4Q2019; *U.D. Electronic Corp., v. Pulse Electronics, Inc.,* IPR2019-00511 (PTAB filed Dec 28th 2018), (retained by petitioner U. D. Electronic Corp.) – Procopio, Cory, Hargreaves and Savitch LLP
    a. Deposition: 0 (Cumulative total: 31)
    b. Trial/Hearing/Court appearance: 0 (Cumulative total: 10)
    c. IPR/PTAB trial/deposition: 0 (Cumulative total: 4)
    d. Technology: Electrical and fiber optic connectors, panels, and distribution switches using both electronic and optoelectronic components.

Professor (Dr. Dr.) Michael S. Lebby, B. Eng. (Hons), MBA, Ph.D., D. Eng, Fellow NAI, IEEE, OSA; C. Eng.
1 Hawthorne St., unit 25a, San Francisco, CA 94105, USA; mobile +1 717 839 7078; drmlebby@gmail.com

84. Active case work: 1Q2020 – 2Q2020; *IKEA, v. Regents of the University of California,* ITC 337-TA-1172 (filed: July 30th 2019), ("Certain Filament Light-Emitting-Diodes and products containing same") (retained by respondents IKEA) – Flaster and Greenberg, LLP
    a. Deposition: 2 (Cumulative total: 31)
    b. Trial/Hearing/Court appearance: 0 (Cumulative total: 10)
    c. IPR/PTAB trial/deposition: 0 (Cumulative total: 4)
    d. Technology: LED chips, LED packaging and light bulb filaments with transparent sub-mounts.
85. Active case work: 1Q2020-1Q2020; *Hanwha Solutions Corporation, v. Longi Green Energy, Longi Solar Technology, Longi Trading et al.,* IPR2019-01072 (PTAB filed 13th May 2019), (retained by patent owner Hanwha Solutions Corporation) - Covington and Burling LLP
    a. Deposition: 0 (Cumulative total: 31)
    b. Trial/Hearing/Court appearance: 0 (Cumulative total: 10)
    c. IPR/PTAB trial/deposition: 0 (Cumulative total: 4)
    d. Technology: Silicon solar cells and materials analysis of passivation layers
86. Active case work: 1Q2020-1Q2020; *Hanwha Solutions Corporation, v. REC Solar Pte. Ltd. and JinkSolar (U.S.) Inc.* IPR2019-01145 (PTAB filed 6th March 2019), (retained by patent owner Hanwha Solutions Corporation) - Covington and Burling LLP
    a. Deposition: 0 (Cumulative total: 31)
    b. Trial/Hearing/Court appearance: 0 (Cumulative total: 10)
    c. IPR/PTAB trial/deposition: 0 (Cumulative total: 4)
    d. Technology: Silicon solar cells and materials analysis of passivation layers
87. Active case work: 4Q2019 – 2Q2020; *Viavi Solutions Inc., v Optrontec Inc.,* ITC 337-TA-1187 (filed: 18th November 2019), ("Certain Electronic devices with Optical Filters and Optical Sensor Systems and Components Thereof") (retained by complainant Viavi Solutions Inc.,) – Venable, LLP
    a. Deposition: 0 (Cumulative total: 31)
    b. Trial/Hearing/Court appearance: 0 (Cumulative total: 10)
    c. IPR/PTAB trial/deposition: 0 (Cumulative total: 4)
    d. Technology: Optical filters and optical sensor systems, design and fabrication of dielectric materials for passband filters in applications such as optical communications, imaging, sensing, medical, automotive.
88. Active case work: 2Q2020 – 4Q2020; *Leviton Manufacturing Co., v. Corning Optical Communications LLC.,* ITC 337-TA-1194 (filed: 19th March 2020), ("Certain High-Density Fiber Optic Equipment and Components Thereof") (retained by respondent Leviton Manufacturing Co.,) – Morrison & Foerster, LLP
    a. Deposition: 1 (Cumulative total: 32)
    b. Trial/Hearing/Court appearance: 1 (Cumulative total: 11)
    c. IPR/PTAB trial/deposition: 0 (Cumulative total: 4)
    d. Technology: Fiber optic adapters, fiber optic connectors (simplex, duplex, quad, multi-fiber), fiber trays, racks, and fiber cabinet equipment.
    e. Technology: LED chips, LED packaging and light bulb filaments with transparent sub-mounts.
89. Active case work: 2Q2020 – 2Q2020; subject to PO/NDA and engagement letter *xxx v. yyy,* Post Grant Review petition for proceedings (US Patent # zzz), retained by Morrison and Foerster, LLP
    a. Deposition: 0 (Cumulative total: 31)
    b. Trial/Hearing/Court appearance: 0 (Cumulative total: 10)
    c. IPR/PTAB trial/deposition: 0 (Cumulative total: 4)
    d. Optoelectronics, LEDs, lead frame packaging, optics, optical lenses, GaN (Gallium Nitride), optical transparency
90. Active case work: 1Q2020-3Q2020; *Cellect LLC, v. Samsung Electronics Co., LTD and Samsung Electronics America, Inc.,* IPR2020-00560 (PTAB filed 16th Feb 2020), (retained by patent owner Cellect LLC) – retained by Kramer Levin Naftalis & Frankel LLP
    a. Deposition: 0 (Cumulative total: 32)
    b. Trial/Hearing/Court appearance: 0 (Cumulative total: 11)
    c. IPR/PTAB trial/deposition: 0 (Cumulative total: 4)
    d. Technology: Silicon CMOS image sensors, drive electronics, smart pixels and CCD technology
91. Active case work: 2Q2020-2Q2020; *Panasonic, v. 3M Innovative Properties Company.,* Preparation for IPR filing, (retained by defendant Panasonic) – retained by Westerman Hattori Daniels & Adrian LLP
    a. Deposition: 0 (Cumulative total: 32)
    b. Trial/Hearing/Court appearance: 0 (Cumulative total: 11)
    c. IPR/PTAB trial/deposition: 0 (Cumulative total: 4)
    d. Technology: Touch sensor (resistive, optical, and capacitive) technology for mobile displays. Analysis of display, electronic, and optical technologies.
92. Active case work: 2Q2020-3Q2020; *Longi Green Energy Technology Co, Longi Solar Technology Co, Long Solar Technology (H.K., Kuching, Taizhou, Zhejiang, Hefei, US) v. Hanwha Solutions Corporation.*, IPR 2019-01072, (retained by patent owner Hanwha Solutions Corporation) – Quinn Emanuel Urquhart & Sullivan, LLP
    a. Deposition: 1 (Cumulative total: 33)

Professor (Dr. Dr.) Michael S. Lebby, B. Eng. (Hons), MBA, Ph.D., D. Eng, Fellow NAI, IEEE, OSA; C. Eng.
1 Hawthorne St., unit 25a, San Francisco, CA 94105, USA; mobile +1 717 839 7078; drmlebby@gmail.com

b. Trial/Hearing/Court appearance: 0 (Cumulative total: 11)
c. IPR/PTAB trial/deposition: 1 (Cumulative total: 5)
d. Optoelectronics; solar cell design, fabrication, device performance, packaging, and interface issues relating to passivation (both chemical and electric field enhanced).

93. Active case work: 3Q2020-3Q2020; *Oyster Optics LLC v. Ciena Corp,* 4:17-CV-05920 (N. D. CA filed: April 22nd 2020); (retained by plaintiff Oyster Optics LLC) – Russ August & Kabat LLP.
    a. Deposition: 0 (Cumulative total: 33)
    b. Trial/Hearing/Court appearance: 1 (Cumulative total: 12)
    c. IPR/PTAB trial/deposition: 0 (Cumulative total: 5)
    d. Technology: Fiber optic based optoelectronic semiconductor component design and operation, especially phase shift keying and phase based coherent communications.
94. Active case work: 3Q2020-2Q2021; *Capella Photonics Inc., v. Infinera Corporation, Tellabs, Tellabs Operations Inc., Coriant American Inc., and Coriant USA Inc., 2*:20-CV-00077 (E. D. TX filed: March 16th 2020); (retained by defendant Infinera Inc.) – Baker Botts LLP.
    a. Deposition: 1 (Cumulative total: 34)
    b. Trial/Hearing/Court appearance: 0 (Cumulative total: 12)
    c. IPR/PTAB trial/deposition: 0 (Cumulative total: 5)
    d. Technology: Fiber optic wavelength selective switches (WSS), reconfigurable add-drop multiplexors (ROADMs), and their design. Technical issues include polarization, wavelength selection, coupling, mux/demux and operation in optical networks.
95. Active case work: 3Q2020-3Q2020; *Longi Green Energy Technology Co, Longi Solar Technology Co, Long Solar Technology (H.K., Kuching, Taizhou, Zhejiang, Hefei, US) v. Hanwha Solutions Corporation.*, IPR 2020-00353, (retained by patent owner Hanwha Solutions Corporation) – Quinn Emanuel Urquhart & Sullivan, LLP
    a. Deposition: 0 (Cumulative total: 34)
    b. Trial/Hearing/Court appearance: 0 (Cumulative total: 12)
    c. IPR/PTAB trial/deposition: 1 (Cumulative total: 6)
    d. Optoelectronics: solar cell design, fabrication, device performance, packaging, and interface issues relating to passivation (both chemical and electric field enhanced).
96. Active case work: 3Q2020-2Q2021; *Appotronics Corporation Ltd. v. Delta Electronics Inc., 2*:19-CV-00466 (E. D. Va filed: July 22nd 2020); (retained by defendant Delta Corporation Inc) – Pillsbury Winthorp Shaw Pitman LLP.
    a. Deposition: 1 (Cumulative total: 35)
    b. Trial/Hearing/Court appearance: 0 (Cumulative total: 12)
    c. IPR/PTAB trial/deposition: 0 (Cumulative total: 6)
    d. Technology: Light projectors for display and the color wheel, phosphor technology, high power visible lasers for projection, and the associated packaging of the modules/projectors for efficient cost design..
97. Active case work: 3Q2020 – 2Q2021; *Ideal Industries Lighting LLC (dba Cree Lighting) v. RAB Lighting Inc.,* ITC 337-TA-1213 (filed: 15th July 2020), ("Certain Light-emitting Diode Products, Fixtures, and Components thereof"), (retained by plaintiff Ideal Industries Lighting LLC (dba Cree Lighting) – Quinn Emanuel Urquhart an Sullivan, LLP
    a. Deposition: 1(Cumulative total: 36)
    b. Trial/Hearing/Court appearance: 2(twice at the stand); (Cumulative total: 14)
    c. IPR/PTAB trial/deposition: 0 (Cumulative total: 6)
    d. Technology: Visible GaN based LEDs and various packaging optical lens designs for directing and re-directing LED light output with applications in street lighting.
98. Active case work: 3Q2020-3Q2020; *Cellect LLC, v. Samsung Electronics Co., LTD and Samsung Electronics America, Inc., ex parte* declaration entitled, 'Hand-held computers incorporating reduced area imaging devices', for U.S. Patent 6,982,742 (control number 90/014,453), (retained by patent owner Cellect LLC) – retained by Kramer Levin Naftalis & Frankel LLP
    a. Deposition: 0 (Cumulative total: 36)
    b. Trial/Hearing/Court appearance: 0 (Cumulative total: 14)
    c. IPR/PTAB trial/deposition: 0 (Cumulative total: 6)
    d. Technology: Hand-held silicon CMOS image sensors, drive electronics, smart pixels and CCD technology. Technical history of CCD v. CMOS image sensors in the 1990s and associated performance criteria.
99. Active case work: 3Q2020-3Q2020; *Cellect LLC, v. Samsung Electronics Co., LTD and Samsung Electronics America, Inc., ex parte* declaration entitled, 'Communication devices incorporating reduced area imaging devices', for U.S. Patent 6,452,626 (control number 90/014,455), (retained by patent owner Cellect LLC) – retained by Kramer Levin Naftalis & Frankel LLP
    a. Deposition: 0 (Cumulative total: 36)
    b. Trial/Hearing/Court appearance: 0 (Cumulative total: 14)
    c. IPR/PTAB trial/deposition: 0 (Cumulative total: 6)

Professor (Dr. Dr.) Michael S. Lebby, B. Eng. (Hons), MBA, Ph.D., D. Eng, Fellow NAI, IEEE, OSA; C. Eng.
1 Hawthorne St., unit 25a, San Francisco, CA 94105, USA; mobile +1 717 839 7078; drmlebby@gmail.com

d. Technology: Hand-held silicon CMOS image sensors, drive electronics, smart pixels and CCD technology. Technical history of CCD v. CMOS image sensors in the 1990s and associated performance criteria.

100. Active case work: 4Q2020-4Q2020; *Cellect LLC, v. Samsung Electronics Co., LTD and Samsung Electronics America, Inc.,* IPR declaration for U.S. Patent 9,198,565 (IPR2020-00476), (retained by patent owner Cellect LLC) – retained by Kramer Levin Naftalis & Frankel LLP
    a. Deposition: 0 (Cumulative total: 36)
    b. Trial/Hearing/Court appearance: 0 (Cumulative total: 14)
    c. IPR/PTAB trial/deposition: 0 (Cumulative total: 6)
    d. Technology: Hand-held silicon CMOS image sensors, drive electronics, smart pixels and CCD technology. Technical history of CCD v. CMOS image sensors in the 1990s and associated performance criteria.
101. Active case work: 4Q2020-4Q2020; *Cellect LLC, v. Samsung Electronics Co., LTD and Samsung Electronics America, Inc.,* IPR declaration for U.S. Patent 9,667,896 (IPR2020-00477), (retained by patent owner Cellect LLC) – retained by Kramer Levin Naftalis & Frankel LLP
    a. Deposition: 0 (Cumulative total: 36)
    b. Trial/Hearing/Court appearance: 0 (Cumulative total: 14)
    c. IPR/PTAB trial/deposition: 0 (Cumulative total: 6)
    d. Technology: Hand-held silicon CMOS image sensors, drive electronics, smart pixels and CCD technology. Technical history of CCD v. CMOS image sensors in the 1990s and associated performance criteria.
102. Active case work: 4Q2020 – 1Q2021; *U.D. Electronic Corp., v. Pulse Electronics, Inc.,* 3:18-CV-00373 (Filed Fed 16th 2018), (retained by petitioner U. D. Electronic Corp.) – retained by defendant Perkins Coie LLP.
    a. Deposition: 1 (Cumulative total: 37)
    b. Trial/Hearing/Court appearance: 0 (Cumulative total: 14)
    c. IPR/PTAB trial/deposition: 0 (Cumulative total: 6)
    d. Technology: Electrical and fiber optic connectors, panels, and distribution switches using both electronic and optoelectronic components. Noise suppression using EMI between electrical components and connectors.
103. Active case work: 4Q2020-4Q2020; *Cellect LLC, v. Samsung Electronics Co., LTD and Samsung Electronics America, Inc.,* IPR declaration for U.S. Patent 9,186,052 (IPR2020-00512), (retained by patent owner Cellect LLC) – retained by Kramer Levin Naftalis & Frankel LLP
    a. Deposition: 1 (Cumulative total: 38)
    b. Trial/Hearing/Court appearance: 0 (Cumulative total: 14)
    c. IPR/PTAB trial/deposition: 0 (Cumulative total: 6)
    d. Technology: Hand-held silicon CMOS image sensors, drive electronics, smart pixels and CCD technology. Technical history of CCD v. CMOS image sensors in the 1990s and associated performance criteria.
104. Active case work: 4Q2020-4Q2020; *Cellect LLC, v. Samsung Electronics Co., LTD and Samsung Electronics America, Inc.,* IPR declaration for U.S. Patent 9,186,052 (IPR2020-00475), (retained by patent owner Cellect LLC) – retained by Kramer Levin Naftalis & Frankel LLP
    a. Deposition: 1 (Cumulative total: 39)
    b. Trial/Hearing/Court appearance: 0 (Cumulative total: 14)
    c. IPR/PTAB trial/deposition: 0 (Cumulative total: 6)
    d. Technology: Hand-held silicon CMOS image sensors, drive electronics, smart pixels and CCD technology. Technical history of CCD v. CMOS image sensors in the 1990s and associated performance criteria.
105. Active case work: 3Q2020 – 1Q2021; *Huawei Technologies Co. Ltd. v. Verizon Communications, Inc., et al.,* 20-CV-030-JRG (TX E. D. Filed 2nd April 2020), (retained by plaintiff Huawei Technologies Co. Ltd.) – retained by plaintiff Caldwell Cassady Curry P.C.
    a. Deposition: 0 (Cumulative total: 39)
    b. Trial/Hearing/Court appearance: 0 (Cumulative total: 14)
    c. IPR/PTAB trial/deposition: 0 (Cumulative total: 6)
    d. Technology: Analysis of coding for fiber optic communications, specifically in relation to the standardization process for the Telecommunication Standardization Sector of the International Telecommunications Union ("ITU-T"), including the ITU-T's G.709: Interfaces for the optical transport network standard ("G.709" or "the G.709 Standard"). In particular, the technical issues that relate to OTN hierarchy; functionality of the overhead in support of multi-wavelength optical networks; frame structures, bit rates, and formats for mapping client signals.
106. Active case work: 1Q2021 – 3Q2021; *IKEA et al., v. Regents of the University of California,* ITC 337-TA-1220 (filed: 29th September 2020), ("Certain filament light-emitting diodes and products containing same (II)"), (retained by respondent JDG: IKEA, Global Value Lighting, Signify, Home Depot, GE, Satco) – retained by Flaster Greenberg PC, Kirkland and Ellis, GT Law, Alston and Bird, Jones Day and Goodwin Law as JDG counsel.

Professor (Dr. Dr.) Michael S. Lebby, B. Eng. (Hons), MBA, Ph.D., D. Eng, Fellow NAI, IEEE, OSA; C. Eng.
1 Hawthorne St., unit 25a, San Francisco, CA 94105, USA; mobile +1 717 839 7078; drmlebby@gmail.com

a. Deposition: 2 (Cumulative total: 41)
b. Trial/Hearing/Court appearance: 1 (Cumulative total: 15)
c. IPR/PTAB trial/deposition: 0 (Cumulative total: 6)
d. Technology: LED chips, LED packaging and light bulb filaments with transparent sub-mounts.

107. Active case work 4Q2020 – 1Q2021; *Uber Technologies Inc., v. Anthony Scott Levandowski*; Case No. 20-30242 (HLB) and 20-03050 (filed 16th September 2020), retained by defendant Uber Technologies Inc., retained by Jenner and Block LLP.
    a. Deposition: 0 (Cumulative total: 41)
    b. Trial/Hearing/Court appearance: 0 (Cumulative total: 15)
    c. IPR/PTAB trial/deposition: 0 (Cumulative total: 6)
    d. Technology: LIDAR technology for motor vehicles that includes fiber amplifiers, LIDAR hardware, laser diodes, photodetectors, fiber links, and free space communications.
108. Active case work: 1Q2021 – 3Q2021; *CoSemi Technologies, v. Everpro Technologies, Fibbr Technologies, Logitech, and Facebook Technologies,* ITC 337-TA-1233 (filed: 29th October 2020), "Certain active optical cables and products containing same", (retained by claimant Cosemi Technologies) – retained by Rutan & Tucker LLP.
    a. Deposition: 1 (Cumulative total: 42)
    b. Trial/Hearing/Court appearance: 0 (Cumulative total: 15)
    c. IPR/PTAB trial/deposition: 0 (Cumulative total: 6)
    d. Technology: Active optical cables with embedded silicon modulator ICs, copper cable, fiber optic cable, VCSEL laser diodes, photodetectors and cable sheathing for consumer applications such as gaming, HDMI, USB, etc.
109. Active case work: 2Q2021 – 3Q2021; *Acuity Brands Lighting ,Inc. v. Heavy Duty Lighting (HDL), LLC.,* 20-CV-03648-SCJ (GA N. D. Filed 2nd September 2020), (retained by defendant Acuity Brands Lighting) – retained by defendant Duane Morris LLP.
    a. Deposition: 1 (Cumulative total: 43)
    b. Trial/Hearing/Court appearance: 0 (Cumulative total: 15)
    c. IPR/PTAB trial/deposition: 0 (Cumulative total: 6)
    d. Technology: LED lighting, LED chips, LED packages and LED packaging technologies such as molding, glob-top, substrates, die mounting, optical reflectors, and electrical interconnect layouts.
110. Active case work: 2Q2021 – 4Q2021; *Jiaxing Super Lighting Electric Appliance Co., LTD and Obert Inc. v. CH Lighting Technology co., LTD., Elliott Electric Supply Inc., and Shaoxing Ruising Lighting co., Ltd.,* 20-CV-00018-ADA (TX W D. Filed 16th March 2020), (retained by defendant CH Lighting et al) – retained by defendant Holland and Knight LLP.
    a. Deposition: 1 (Cumulative total: 44)
    b. Trial/Hearing/Court appearance: 1 (Cumulative total: 16)
    c. IPR/PTAB trial/deposition: 0 (Cumulative total: 6)
    d. Technology: LED lighting and LED packaging technologies for T8 and T12 form factor tube lighting. Technologies such as LED luminaire/tube packaging, mechanical structure, thermal heat dissipation, electronic circuitry, printed circuit boards, and LED chips.
111. Active case work: 3Q2021 – 1Q2022; ASUSTEK Computer Inc, *v. KT Imaging USA LLC,* 20-CV-00300-ADA (TX W D. Filed 20th April 2020, (retained by defendant ASUSTEK Computer Inc) – retained by defendant Turner Boyd LLP.
    a. Deposition: 0 (Cumulative total: 44)
    b. Trial/Hearing/Court appearance: 0 (Cumulative total: 16)
    c. IPR/PTAB trial/deposition: 0 (Cumulative total: 6)
    d. Technology: Image sensor modules, cameras in PCs/laptops, consumer products, tear downs, optical lenses, optical packaging, optical alignment.
112. Active case work: 3Q2021 – 3Q2021; *Jiaxing Super Lighting Electric Appliance Co., LTD and Obert Inc. v. Maxlite Inc.,* 19-CV-04047 (CA C.D. Filed 8th May 2019), (retained by defendant Maxlite Inc) – retained by defendant Holland and Knight LLP.
    a. Deposition: 0 (Cumulative total: 44)
    b. Trial/Hearing/Court appearance: 0 (Cumulative total: 16)
    c. IPR/PTAB trial/deposition: 0 (Cumulative total: 6)
    d. Technology: LED lighting and LED packaging technologies for T8 and T12 form factor tube lighting. Technologies such as LED luminaire/tube packaging, mechanical structure, thermal heat dissipation, electronic circuitry, printed circuit boards, and LED chips.
113. Active case work: 3Q2021 – 2Q2022; *Feit Electric Company Inc., v. Nichia Corporation,* 20-CV-00359-GW, (CA C. D. Filed 13th January 2020), (retained by defendant Feit Electric Company) – retained by Benesch Friedlander Coplan &Aronoff LLP
    a. Deposition: 2 (Cumulative total: 46)
    b. Trial/Hearing/Court appearance: 0 (Cumulative total: 16)
    c. IPR/PTAB trial/deposition: 0 (Cumulative total: 6)

Professor (Dr. Dr.) Michael S. Lebby, B. Eng. (Hons), MBA, Ph.D., D. Eng, Fellow NAI, IEEE, OSA; C. Eng.
1 Hawthorne St., unit 25a, San Francisco, CA 94105, USA; mobile +1 717 839 7078; drmlebby@gmail.com

d. Technology: LED lighting, LED chips, LED packages and LED packaging technologies such as lead-frames, molding, glob-top, substrates, die mounting, optical reflectors, and electrical interconnect layouts.

114. Active case work: 2Q2021 – 2Q2022; *Samsung Corporation vs TBD*, Pre-patent litigation, (retained by plaintiff Samsung Corporation), - retained by Quinn Emanuel Urquhart & Sullivan, LLP).
    a. Deposition: 0 (Cumulative total: 46)
    b. Trial/Hearing/Court appearance: 0 (Cumulative total: 16)
    c. IPR/PTAB trial/deposition: 0 (Cumulative total: 6)
    d. Technology: TV displays, OLEDs, LCDs, color gamut, and quality of RGB/white color as per CIE charts and colorimetry (NTSC, sRGB, AdobeRGB etc,.). Analysis of CHL (constant hue locus), quantum dots, nano-crystals, nano-devices, nano-structures to improve light quality output.
115. Active case work 2Q2021 – 2Q2021, *Holochip Corporation v, Edmund Optics, Optotune AG and others TBD*, Pre-patent litigation for ITC, (retained by plaintiff Holochip Corporation), - retained by King and Spalding LLP).
    a. Deposition: 0 (Cumulative total: 46)
    b. Trial/Hearing/Court appearance: 0 (Cumulative total: 16)
    c. IPR/PTAB trial/deposition: 0 (Cumulative total: 6)
    d. Technology: Fluid lenses, and optical lenses with controlled focus facilities. Packaging of fluid lenses using piezoelectric actuators, and hermetic chambers. Deformable surfaces using micro-fluidics.
116. Active case work: 2Q2021-3Q2021; *Home Depot USA Inc., v. Lynk Labs, Inc.,* IPR declaration for U.S. Patent 10,757,783 (IPR2021-01368), (retained by petitioner Home Depot USA, Inc) – retained by DLA Piper LLP
    a. Deposition: 1 (Cumulative total: 47)
    b. Trial/Hearing/Court appearance: 0 (Cumulative total: 16)
    c. IPR/PTAB trial/deposition: 1 (Cumulative total: 7)
    d. Technology: LED products, LED circuits, including both DC and AC circuit design. LED color emission, white light, color mixing, CIE charts, and black body radiators for color temperature.
117. Active case work: 2Q2021-3Q2021; *Home Depot USA Inc., v. Lynk Labs, Inc.,* IPR declaration for U.S. Patent 10,492,251 (IPR2021-01369), (retained by petitioner Home Depot USA, Inc) – retained by DLA Piper LLP
    a. Deposition: 1 (Cumulative total: 48)
    b. Trial/Hearing/Court appearance: 0 (Cumulative total: 16)
    c. IPR/PTAB trial/deposition: 1 (Cumulative total: 8)
    d. Technology: LED products, LED circuits, including both DC and AC circuit design. LED color emission, white light, color mixing, CIE charts, and black body radiators for color temperature.
118. Active case work: 3Q2021-3Q2021; *Home Depot USA Inc., v. Lynk Labs, Inc.,* IPR declaration for U.S. Patent 10,091,842 (IPR2021-01540), (retained by petitioner Home Depot USA, Inc) – retained by DLA Piper LLP
    a. Deposition: 1 (Cumulative total: 49)
    b. Trial/Hearing/Court appearance: 0 (Cumulative total: 16)
    c. IPR/PTAB trial/deposition: 1 (Cumulative total: 9)
    d. Technology: LED products, LED circuits, including both DC and AC circuit design. LED color emission, white light, color mixing, CIE charts, and black body radiators for color temperature.
119. Active case work: 4Q2021-4Q2021; *Home Depot USA Inc., v. Lynk Labs, Inc.,* IPR declaration for U.S. Patent 10,517,149 (IPR2022-000023), (retained by petitioner Home Depot USA, Inc) – retained by DLA Piper LLP
    a. Deposition: 1 (Cumulative total: 50)
    b. Trial/Hearing/Court appearance: 0 (Cumulative total: 16)
    c. IPR/PTAB trial/deposition: 1 (Cumulative total: 10)
    d. Technology: LED products, LED circuits, including both DC and AC circuit design. LED color emission, white light, color mixing, CIE charts, and black body radiators for color temperature.
120. Active case work: 4Q2021-Present; *Everlight Elecs. Co. Ltd. v. Amazon.com, Inc. et al.,* 6:21-CV-00906 (W. D. TX filed: August 31st 2021); (retained by defendant Amazon.com) – Morrison and Foerster LLP.
    a. Deposition: 0 (Cumulative total: 50)
    b. Trial/Hearing/Court appearance: 1 (Cumulative total: 16)
    c. IPR/PTAB trial/deposition: 0 (Cumulative total: 10)
    d. Technology: LED chips, LED packaging with metallic electrodes, flip-chip solder bumping, and doping of semiconductors for electrical conduction.
121. Active case work: 4Q2021-2Q2021; *Hanwha Solutions Corporation and affiliated companies including Q-Cells, Boviet Renewable Power, Boviet Solar, Canadian Solar International v. Advanced Silicon Group Technologies,* ITC 337-TA-1271 (filed: 14th October 2020) "Certain silicon photovoltaic cells and modules with nanostructures, and products containing the same." (retained by joint defense group consisting of Quinn Emanual Urquhart & Sullivan, LLP., Morgan Lewis and Bockius, LLP., and Sidley Austin LLP.).
    a. Deposition: 2 (Cumulative total: 52)
    b. Trial/Hearing/Court appearance: 1 (Cumulative total: 17)
    c. IPR/PTAB trial/deposition: 0 (Cumulative total: 10)
    d. Technology: Silicon based solar/photovoltaic cells and modules that include fabrication techniques such as deposition, diffusion, wet/dry etching of nanostructures, nanowires, and nano-structures, nano-features, black silicon, monocrystalline wafers, and polysilicon fabrication.

Professor (Dr. Dr.) Michael S. Lebby, B. Eng. (Hons), MBA, Ph.D., D. Eng, Fellow NAI, IEEE, OSA; C. Eng.
1 Hawthorne St., unit 25a, San Francisco, CA 94105, USA; mobile +1 717 839 7078; drmlebby@gmail.com

122. Active case work: 4Q2021-2Q2022; *Dell Computer Inc, v. KT Imaging USA LLC,* Declaration for IPR with patent number 6,876,544 as petitioner, (to be filed), (retained by defendant Dell Computer Inc) – retained by petitioner Farella, Braun, and Martel.
    a. Deposition: 0 (Cumulative total: 52)
    b. Trial/Hearing/Court appearance: 0 (Cumulative total: 17)
    c. IPR/PTAB trial/deposition: 0 (Cumulative total: 10)
    d. Technology: Image sensor modules, cameras in PCs/laptops, consumer products, tear downs, optical lenses, optical packaging, optical alignment.
123. Active case work: 1Q2022-2Q2022; *Cree Lighting, Wolfspeed, Ideal Industries Lighting, v. CAO Lighting,* Declaration for IPR with patent number 6,465,961 as petitioner, (filed 8th April 2022), (retained by defendant Cree Lighting) – retained by Kilpatrick Townsend & Stockton LLP.
    a. Deposition: 0 (Cumulative total: 52)
    b. Trial/Hearing/Court appearance: 0 (Cumulative total: 17)
    c. IPR/PTAB trial/deposition: 0 (Cumulative total: 10)
    d. Technology: LED based light bulbs, LED chips, LED arrays, LED packaging, chip-on-board, heat sinks, GaN, InGaN, AlGaN (Gallium Nitride, Indium Gallium Nitride, Aluminum Gallium Nitride) epitaxial layers, active regions, cladding layers, optical mirrors, DBRs
124. Active case work: 1Q2022-2Q2022; *Cree Lighting, Wolfspeed, Ideal Industries Lighting, v. CAO Lighting,* Declaration for IPR with patent numbers 6,634,770 as petitioner, (filed 8th April 2022), (retained by defendant Cree Lighting) – retained by Kilpatrick Townsend & Stockton LLP.
    a. Deposition: 0 (Cumulative total: 52)
    b. Trial/Hearing/Court appearance: 0 (Cumulative total: 17)
    c. IPR/PTAB trial/deposition: 0 (Cumulative total: 10)
    d. Technology: LED based light bulbs, LED chips, LED arrays, LED packaging, chip-on-board, heat sinks, GaN, InGaN, AlGaN (Gallium Nitride, Indium Gallium Nitride, Aluminum Gallium Nitride) epitaxial layers, active regions, cladding layers, optical mirrors, DBRs
125. Active case work: 1Q2022-2Q2022; *Cree Lighting dba Ideal Industries Lighting, v. CAO Lighting,* 1:21-cv-00634 (MD NC filed 12th Aug 2021,), (retained by defendant Cree Lighting) – retained by Kilpatrick Townsend & Stockton LLP.
    a. Deposition: 0 (Cumulative total: 52)
    b. Trial/Hearing/Court appearance: 0 (Cumulative total: 17)
    c. IPR/PTAB trial/deposition: 0 (Cumulative total: 10)
    d. Technology: LED based light bulbs, LED chips, LED arrays, LED packaging, chip-on-board, heat sinks, GaN, InGaN, AlGaN (Gallium Nitride, Indium Gallium Nitride, Aluminum Gallium Nitride) epitaxial layers, active regions, cladding layers, optical mirrors, DBRs
126. Active case work: 1Q2022-2Q2022; *Lite-On Technology Corporation and Genesis Photonics Inc., v. Sensor Electronic Technology Inc., (SETi),* 6:21-cv-00322 (WD Tex filed 12th Aug 2021,), (retained by plaintiff LiteOn and Genesis) – retained by Pillsbury Winthrop Shaw Pittman LLP.
    a. Deposition: 0 (Cumulative total: 52)
    b. Trial/Hearing/Court appearance: 0 (Cumulative total: 17)
    c. IPR/PTAB trial/deposition: 0 (Cumulative total: 10)
    d. Technology: LED based light bulbs, LED chips, LED arrays, LED packaging, flip-chip packaging, chip-on-board, heat sinks, GaN, InGaN, AlGaN (Gallium Nitride, Indium Gallium Nitride, Aluminum Gallium Nitride) epitaxial layers, GaN fabrication, LED quantum well active regions, LEDcladding layers, optical mirrors, DBRs
127. Active case work: 1Q2022-2Q2022; *Lite-On Technology Corporation and Genesis Photonics Inc., v. Sensor Electronic Technology Inc., (SETi),* Declaration for IPR (IPR2022-00395) as patent owner, (retained by plaintiff LiteOn and Genesis) – retained by Pillsbury Winthrop Shaw Pittman LLP.
    a. Deposition: 1 (Cumulative total: 53)
    b. Trial/Hearing/Court appearance: 0 (Cumulative total: 17)
    c. IPR/PTAB trial/deposition: 1 (Cumulative total: 11)
    d. Technology: LED based light bulbs, LED chips, LED arrays, LED packaging, flip-chip packaging, chip-on-board, heat sinks, GaN, InGaN, AlGaN (Gallium Nitride, Indium Gallium Nitride, Aluminum Gallium Nitride) epitaxial layers, GaN fabrication, LED quantum well active regions, LED cladding layers, optical mirrors, DBRs
128. Active case work: 1Q2022-2Q2022; *Lite-On Technology Corporation and Genesis Photonics Inc., v. Sensor Electronic Technology Inc., (SETi),* Declaration for IPR (IPR2022-00396) as patent owner, (retained by plaintiff LiteOn and Genesis) – retained by Pillsbury Winthrop Shaw Pittman LLP.
    a. Deposition: 0 (Cumulative total: 53)
    b. Trial/Hearing/Court appearance: 0 (Cumulative total: 17)
    c. IPR/PTAB trial/deposition: 0 (Cumulative total: 11)
    d. Technology: LED based light bulbs, LED chips, LED arrays, LED packaging, flip-chip packaging, chip-on-board, heat sinks, GaN, InGaN, AlGaN (Gallium Nitride, Indium Gallium Nitride, Aluminum

Professor (Dr. Dr.) Michael S. Lebby, B. Eng. (Hons), MBA, Ph.D., D. Eng, Fellow NAI, IEEE, OSA; C. Eng.
1 Hawthorne St., unit 25a, San Francisco, CA 94105, USA; mobile +1 717 839 7078; drmlebby@gmail.com

Gallium Nitride) epitaxial layers, GaN fabrication, LED quantum well active regions, LED cladding layers, optical mirrors, DBRs

129. Active case work: 1Q2022-2Q2022; *Lite-On Technology Corporation and Genesis Photonics Inc., v. Sensor Electronic Technology Inc., (SETi),* Declaration for IPR (IPR2022-00397) as patent owner, (retained by plaintiff LiteOn and Genesis) – retained by Pillsbury Winthrop Shaw Pittman LLP.
    a. Deposition: 0 (Cumulative total: 53)
    b. Trial/Hearing/Court appearance: 0 (Cumulative total: 17)
    c. IPR/PTAB trial/deposition: 0 (Cumulative total: 11)
    d. Technology: LED based light bulbs, LED chips, LED arrays, LED packaging, flip-chip packaging, chip-on-board, heat sinks, GaN, InGaN, AlGaN (Gallium Nitride, Indium Gallium Nitride, Aluminum Gallium Nitride) epitaxial layers, GaN fabrication, LED quantum well active regions, LED cladding layers, optical mirrors, DBRs
130. Active case work: 1Q2022-2Q2022; *Lite-On Technology Corporation and Genesis Photonics Inc., v. Sensor Electronic Technology Inc., (SETi),* Declaration for IPR (IPR2022-00406) as patent owner, (retained by plaintiff LiteOn and Genesis) – retained by Pillsbury Winthrop Shaw Pittman LLP.
    a. Deposition: 0 (Cumulative total: 53)
    b. Trial/Hearing/Court appearance: 0 (Cumulative total: 17)
    c. IPR/PTAB trial/deposition: 0 (Cumulative total: 11)
    d. Technology: LED based light bulbs, LED chips, LED arrays, LED packaging, flip-chip packaging, chip-on-board, heat sinks, GaN, InGaN, AlGaN (Gallium Nitride, Indium Gallium Nitride, Aluminum Gallium Nitride) epitaxial layers, GaN fabrication, LED quantum well active regions, LED cladding layers, optical mirrors, DBRs
131. Active case work: 1Q2022-2Q2022; *Lite-On Technology Corporation and Genesis Photonics Inc., v. Sensor Electronic Technology Inc., (SETi),* Declaration for IPR (IPR2022-00419) as patent owner, (retained by plaintiff LiteOn and Genesis) – retained by Pillsbury Winthrop Shaw Pittman LLP.
    a. Deposition: 0 (Cumulative total: 53)
    b. Trial/Hearing/Court appearance: 0 (Cumulative total: 17
    c. IPR/PTAB trial/deposition: 0 (Cumulative total: 11)
    d. Technology: LED based light bulbs, LED chips, LED arrays, LED packaging, flip-chip packaging, chip-on-board, heat sinks, GaN, InGaN, AlGaN (Gallium Nitride, Indium Gallium Nitride, Aluminum Gallium Nitride) epitaxial layers, GaN fabrication, LED quantum well active regions, LED cladding layers, optical mirrors, DBRs
132. Active case work: 1Q2022-3Q2022; *Panasonic Corporation, v. Magna International Inc.,* 21-cv-00319 (WD Tex filed 31st Mar 2021,), (retained by plaintiff Panasonic) – retained by Sidley Austin LLP.
    a. Deposition: 0 (Cumulative total: 53)
    b. Trial/Hearing/Court appearance: 0 (Cumulative total: 17)
    c. IPR/PTAB trial/deposition: 0 (Cumulative total: 11)
    d. Technology: Automotive sensors, cameras, electronic circuitry, controls, packaging, surround view camera systems.
133. Active case work: 2Q2022 – Present; *Jiaxing Super Lighting Electric Appliance Co., LTD and Obert Inc. v. Maxlite Inc.,* 19-CV-04047 (CA C.D. Filed 8th May 2019), (retained by defendant Maxlite Inc) – retained by defendant Procopio, Cory, Hargreaves and Savitch LLP.
    a. Deposition: 0 (Cumulative total: 53)
    b. Trial/Hearing/Court appearance: 0 (Cumulative total: 17)
    c. IPR/PTAB trial/deposition: 0 (Cumulative total: 11)
    d. Technology: LED lighting and LED packaging technologies for T8 and T12 form factor tube lighting. Technologies such as LED luminaire/tube packaging, mechanical structure, thermal heat dissipation, electronic circuitry, printed circuit boards, and LED chips.
134. Active case work: 1Q2022 – 4Q2022; *Advanced Engineering Services LLC., v. Lumasense Technologies Inc., and DOES* 1-50, 21-CV-03279-WHO combined with 20-CV-07905-WHO (CA N.D. Filed 23rd Feb 2022), (retained by plaintiff Advanced Engineering Services LLC) – retained by plaintiff SAC Attorneys LLP
    a. Deposition: 1 (Cumulative total: 54)
    b. Trial/Hearing/Court appearance: 0 (Cumulative total: 17)
    c. IPR/PTAB trial/deposition: 0 (Cumulative total: 11)
    d. Technology: Thermal, gas, and flow sensing for use in designing and manufacturing equipment used in semiconductor chip manufacturing. In particular, review of data relating to the simulation of finite element analysis ("FEA") and computational fluid dynamics ("CFD") data for gases, temperature, and stress with actual sensor data that could be intelligently integrated, customized, installed, tested, verified, and validated.
135. Active case work: 2Q2022-3Q2022; *Frontier Communications v. Charter Communications*, Pre-litigation IP and Due Diligence; Case No. TBD; Retained by Frontier Communications, (retained by Mayer Brown LLP)
    a. Deposition: 0 (Cumulative total: 54)
    b. Trial/Hearing/Court appearance: 0 (Cumulative total: 17)
    c. IPR/PTAB trial/deposition: 0 (Cumulative total: 11)

Professor (Dr. Dr.) Michael S. Lebby, B. Eng. (Hons), MBA, Ph.D., D. Eng, Fellow NAI, IEEE, OSA; C. Eng.
1 Hawthorne St., unit 25a, San Francisco, CA 94105, USA; mobile +1 717 839 7078; drmlebby@gmail.com

d. Technology: Optical PON for high-speed data FTTH evaluation, testing, and analysis.

136. Active case work: 2Q2022-3Q2022; *Russ, August & Kabat*, Pre-litigation IP and Due Diligence; Case No. TBD; (retained by plaintiff – Russ, August & Kabat LLP)
    a. Deposition: 0 (Cumulative total: 54)
    b. Trial/Hearing/Court appearance: 0 (Cumulative total: 17)
    c. IPR/PTAB trial/deposition: 0 (Cumulative total: 11)
    d. Technology: High volume fiber optic transceivers for EPON/GPON with: CDR circuits, 'Intelligence-in-the-Module' and 'M-ary' families.
137. Active case work: 2Q2022-3Q2022; *Signify Holding B.V. v. GE Lighting Solutions LLC.,* Declaration for IPR (IPR2022-XXX – in draft form for US patent #7,497,973) as petitioner, (retained by petitioner Signify Holding B.V.) – retained by Alston and Bird LLP
    a. Deposition: 0 (Cumulative total: 54)
    b. Trial/Hearing/Court appearance: 0 (Cumulative total: 17
    c. IPR/PTAB trial/deposition: 0 (Cumulative total: 11)
    d. Technology: LED based light bulbs, LED chips that emit in the UV and visible, LED arrays, LED packaging including phosphors and encapsulants, and the type of phosphors utilized for different emission. In particular, phosphors that are activated by dopants such as Europium (Eu), Manganese (Mn) and the associated ions for these materials e.g. Mn2+, Mn3+, Mn4+, Mn6+, etc. Included analysis of InGaN and AlGaN based epitaxial material systems, and the use of phosphors in high pressure mercury vapor lamps.
138. Active case work: 3Q22 – Present; *Fujifilm Sonosite., v. Butterfly Network, Inc.,* 1-22-CV-00309 (D.Del) Filed 29th Mar 2022), (retained by defendant Butterfly Network, Inc.,) – retained by defendant Akin Gump LLP
    a. Deposition: 0 (Cumulative total: 54)
    b. Trial/Hearing/Court appearance: 0 (Cumulative total: 17)
    c. IPR/PTAB trial/deposition: 0 (Cumulative total: 11)
    d. Technology: Ultra-sonic equipment that includes displays, especially OLED displays. The electronic circuits and how displays are electronically controlled.
139. Active case work: 3Q22 – Present; *LedComm LLC., v. IKEA US Retail LLC et al,* 6-22-CV-00302-ADA (W.D. Tx.) Filed 21st Mar 2022), (retained by defendant IKEA US Retail LLC et al.) – retained by defendant Flaster Greenberg LLP
    a. Deposition: 0 (Cumulative total: 54)
    b. Trial/Hearing/Court appearance: 0 (Cumulative total: 17)
    c. IPR/PTAB trial/deposition: 0 (Cumulative total: 11)
    d. Technology: LED surface mount packaging, LED GaN/InGaN chips, and associated LED lighting performance specifications.
140. Active case work: 2Q22 – 3Q2022; *NXP Semiconductors N.V. and NXP USA Inc., v. MediaTek Inc,, Amazon.com Inc., Belkin International Inc, Linksys USA Inc., et al,* ITC Investigation 337-TA-1287 entitled "Certain integrated circuits, and electronic devices and products containing the same" (Filed 1st Dec 2021), (retained by respondents Amazon.com Inc.,) – retained by respondent Morrison Foerster LLP
    a. Deposition: 0 (Cumulative total: 54)
    b. Trial/Hearing/Court appearance: 0 (Cumulative total: 17)
    c. IPR/PTAB trial/deposition: 0 (Cumulative total: 11)
    d. Technology: LED surface mount packaging, LED GaN/InGaN chips, and associated LED lighting performance specifications.
141. Active case work: 3Q22 – 4Q22; *Amazon.com Inc., v. Epistar Corp.,* 6-22-CV-00526-ADA (W.D. Tx.) Filed 24th May 2022), (retained by defendant Amazon.com Inc..) – retained by defendant Morrison Foerster LLP
    a. Deposition: 0 (Cumulative total: 54)
    b. Trial/Hearing/Court appearance: 0 (Cumulative total: 17)
    c. IPR/PTAB trial/deposition: 0 (Cumulative total: 11)
    d. Technology: LED surface mount packaging, LED GaN/InGaN chips, GaN/InGaN epitaxial growth, fabrication, device design and packaging.
142. Active case work: 4Q22 – Present; *Amazon.com Inc., v. Epistar Corp.,* 6-22-CV-00526-ADA (W.D. Tx.) Filed 24th May 2022), (retained by defendant Amazon.com Inc..) – retained by defendant Perkins Coie LLP
    a. Deposition: 0 (Cumulative total: 54)
    b. Trial/Hearing/Court appearance: 0 (Cumulative total: 17)
    c. IPR/PTAB trial/deposition: 0 (Cumulative total: 11)
    d. Technology: LED surface mount packaging, LED GaN/InGaN chips, GaN/InGaN epitaxial growth, fabrication, device design and packaging.
    e.

f

Professor (Dr. Dr.) Michael S. Lebby, B. Eng. (Hons), MBA, Ph.D., D. Eng, Fellow NAI, IEEE, OSA; C. Eng.
1 Hawthorne St., unit 25a, San Francisco, CA 94105, USA; mobile +1 717 839 7078; drmlebby@gmail.com

PUBLISHED PATENT APPLICATIONS: *Current total = 84*

Recent USPTO published patent applications:

PUB. APP. NO.	Title	
1	20220187638	HYBRID EO POLYMER MODULATOR WITH ALD SEALANT LAYER
2	20220187637	HYBRID EO POLYMER MODULATOR WITH SILICON PHOTONICS
3	20220113566	TFP OPTICAL TRANSITION DEVICE AND METHOD
4	20220052249	A-axis Josephson Junctions with Improved Smoothness

As per USPTO website the current list of published patent applications:

PUB. APP. NO.	Title	
1	20210141251	ACTIVE REGION-LESS MODULATOR AND METHOD
2	20210141250	ACTIVE REGION-LESS MODULATOR AND METHOD
3	20210005720	ELECTRONIC DEVICE WITH 2-DIMENSIONAL ELECTRON GAS BETWEEN POLAR-ORIENTED RARE-EARTH OXIDE LAYER GROWN OVER A SEMICONDUCTOR
4	20200285085	DIRECT DRIVE REGION-LESS POLYMER MODULATOR METHODS OF FABRICATING AND MATERIALS THEREFOR

As per USPTO website 80 patent applications that have been published:

PUB. APP. NO.	Title	
1	20200183245	ELECTRO-OPTIC POLYMER DEVICES HAVING HIGH PERFORMANCE CLADDINGS, AND METHODS OF PREPARING THE SAME
2	20200183201	ACTIVE REGION-LESS POLYMER MODULATOR INTEGRATED ON A COMMON PIC PLATFORM AND METHOD
3	20200161417	III-N TO RARE EARTH TRANSITION IN A SEMICONDUCTOR STRUCTURE
4	20200150363	CONDUCTIVE MULTI-FIBER/PORT HERMETIC CAPSULE AND METHOD
5	20200119516	HERMETIC CAPSULE AND METHOD
6	20200091398	JOSEPHSON JUNCTION USING MOLECULAR BEAM EPITAXY
7	20200088941	PROTECTION LAYERS FOR POLYMER MODULATORS/WAVEGUIDES

Professor (Dr. Dr.) Michael S. Lebby, B. Eng. (Hons), MBA, Ph.D., D. Eng, Fellow NAI, IEEE, OSA; C. Eng.
1 Hawthorne St., unit 25a, San Francisco, CA 94105, USA; mobile +1 717 839 7078; drmlebby@gmail.com

8	20200088939	GUIDE TRANSITION DEVICE AND METHOD
9	20200083668	GUIDE TRANSITION DEVICE WITH DIGITAL GRATING DEFLECTORS AND METHOD
10	20190353843	FABRICATION PROCESS OF POLYMER BASED PHOTONIC APPARATUS AND THE APPARTUS
11	20190305039	EPITAXIAL AlN/cREO STRUCTURE FOR RF FILTER APPLICATIONS
12	20190278036	EMBEDDED HERMETIC CAPSULE AND METHOD
13	20190237930	HERMETIC CAPSULE AND METHOD
14	20190227233	RE-based Integrated Photonic and Electronic Layered Structures
15	20190221993	POROUS DISTRIBUTED BRAGG REFLECTORS FOR LASER APPLICATIONS
16	20190204506	PROTECTION LAYERS FOR POLYMER MODULATORS/WAVEGUIDES
17	20190172923	Integrated Epitaxial Metal Electrodes
18	20190148913	GUIDE TRANSITION DEVICE WITH DIGITAL GRATING DEFLECTORS AND METHOD
19	20190139761	Pnictide Buffer Structures and Devices for GaN Base Applications
20	20190122885	GROUP III SEMICONDUCTOR EPITAXY FORMED ON SILICON VIA SINGLE CRYSTAL REN AND REO BUFFER LAYERS
21	20190079243	GUIDE TRANSITION DEVICE AND METHOD
22	20190074365	Integrated Epitaxial Metal Electrodes
23	20190064436	POLYMER MODULATOR AND LASER INTEGRATED ON A COMMON PLATFORM AND METHOD
24	20190028081	LAYER STRUCTURES FOR RF FILTERS FABRICATED USING RARE EARTH OXIDES AND EPITAXIAL ALUMINUM NITRIDE
25	20180259798	DIRECT-DRIVE POLYMER MODULATOR METHODS OF FABRICATING AND MATERIALS THEREFOR
26	20180138284	Integrated Epitaxial Metal Electrodes
27	20180013053	Josephson Junction using Molecular Beam Epitaxy
28	20180012858	RARE EARTH INTERLAYS FOR MECHANICALLY LAYERING DISSIMILAR SEMICONDUCTOR WAFERS
29	20170353002	Rare Earth Pnictides for Strain Management
30	20170141750	LAYER STRUCTURES FOR RF FILTERS FABRICATED USING RARE EARTH OXIDES AND EPITAXIAL ALUMINUM NITRIDE
31	20160133708	STRAIN COMPENSATED REO BUFFER FOR III-N ON SILICON
32	20150014676	III-N MATERIAL GROWN ON REN EPITAXIAL BUFFER ON Si SUBSTRATE
33	20140357014	HIGH EFFICIENCY SOLAR CELL USING IIIB MATERIAL TRANSITION LAYERS
34	20140239307	REO GATE DIELECTRIC FOR III-N DEVICE ON Si SUBSTRATE
35	20140231818	AlN CAP GROWN ON GaN/REO/SILICON SUBSTRATE STRUCTURE
36	20140231817	III-N MATERIAL GROWN ON ALO/ALN BUFFER ON SI SUBSTRATE
37	20140225123	REO/ALO/AlN TEMPLATE FOR III-N MATERIAL GROWTH ON SILICON

Professor (Dr. Dr.) Michael S. Lebby, B. Eng. (Hons), MBA, Ph.D., D. Eng, Fellow NAI, IEEE, OSA; C. Eng.
1 Hawthorne St., unit 25a, San Francisco, CA 94105, USA; mobile +1 717 839 7078; drmlebby@gmail.com

38	20140167057	REO/ALO/AlN TEMPLATE FOR III-N MATERIAL GROWTH ON SILICON
39	20140077339	DELTA DOPING AT Si-Ge INTERFACE
40	20140077338	Si-Ge-Sn ON REO TEMPLATE
41	20140077240	IV MATERIAL PHOTONIC DEVICE ON DBR
42	20140076390	III-V SEMICONDUCTOR INTERFACE WITH GRADED GeSn ON SILICON
43	20140053894	GRADED GeSn ON SILICON
44	20140008644	OXYGEN ENGINEERED SINGLE-CRYSTAL REO TEMPLATE
45	20130334536	SINGLE-CRYSTAL REO BUFFER ON AMORPHOUS SiOx
46	20130248853	NUCLEATION OF III-N ON REO TEMPLATES
47	20130214282	III-N ON SILICON USING NANO STRUCTURED INTERFACE LAYER
48	20130153918	REO-Si TEMPLATE WITH INTEGRATED REO LAYERS FOR LIGHT EMISSION
49	20130099357	STRAIN COMPENSATED REO BUFFER FOR III-N ON SILICON
50	20130071960	INTEGRATED RARE EARTH DEVICES
51	20130062610	LATTICE MATCHED CRYSTALLINE REFLECTOR
52	20130062609	III-N FET ON SILICON USING FIELD SUPPRESSING REO
53	20130032858	RARE EARTH OXY-NITRIDE BUFFERED III-N ON SILICON
54	20120280276	Single Crystal Ge On Si
55	20120256232	Multilayer Rare Earth Device
56	20120183767	HEXAGONAL REO TEMPLATE BUFFER FOR III-N LAYERS ON SILICON
57	20120147906	LASER COOLING OF MODIFIED SOI WAFER
58	20120145243	SOLAR CELLS WITH MAGNETICALLY ENHANCED UP-CONVERSION
59	20120104567	IIIOxNy ON REO/Si
60	20120104443	IIIOxNy ON SINGLE CRYSTAL SOI SUBSTRATE AND III n GROWTH PLATFORM
61	20120090672	REO-Ge Multi-Junction Solar Cell
62	20120085399	REO-Ge Multi-Junction Solar Cell
63	20120073648	Photovoltaic conversion using rare earths plus Group IV Sensitizers
64	20120019902	INTERGRATED PUMP LASER AND RARE EARTH WAVEGUIDE AMPLIFIER
65	20110290313	SOLAR CELLS WITH ENGINEERED SPECTRAL CONVERSION
66	20110220173	ACTIVE SOLAR CONCENTRATOR WITH MULTI-JUNCTION DEVICES
67	20110203666	HIGH EFFICIENCY SOLAR CELL USING IIIB MATERIAL TRANSITION LAYERS
68	20110188533	INTEGRATED RARE EARTH DEVICES
69	20110108908	MULTILAYERED BOX IN FDSOI MOSFETS
70	20100122720	Passive Rare Earth Tandem Solar Cell
71	20100116315	Active rare earth tandem solar cell
72	20100112736	FULL COLOR DISPLAY
73	20100109047	Multijunction rare earth solar cell

Professor (Dr. Dr.) Michael S. Lebby, B. Eng. (Hons), MBA, Ph.D., D. Eng, Fellow NAI, IEEE, OSA; C. Eng.
1 Hawthorne St., unit 25a, San Francisco, CA 94105, USA; mobile +1 717 839 7078; drmlebby@gmail.com

74	20100084680	SPONTANEOUS/STIMULATED LIGHT EMITTING .mu.-CAVITY DEVICE
75	20090291535	STACKED TRANSISTORS AND PROCESS
76	20080135924	Multilayered box in FDSOI MOSFETS
77	20080093670	SIGNAL AND/OR GROUND PLANES WITH DOUBLE BURIED INSULATOR LAYERS AND FABRICATION PROCESS
78	20070018203	Strain inducing multi-layer cap
79	20070018166	Stacked transistors and process
80	20060246691	Signal and/or ground planes with double buried insulator layers and fabrication process

Professor (Dr. Dr.) Michael S. Lebby, B. Eng. (Hons), MBA, Ph.D., D. Eng, Fellow NAI, IEEE, OSA; C. Eng.
1 Hawthorne St., unit 25a, San Francisco, CA 94105, USA; mobile +1 717 839 7078; drmlebby@gmail.com

PATENTS ISSUED: *Current total = 231*

As per the USPTO website the following are *recent* utility patents:

PAT. NO.		Title	
1	11,262,605	T	Active region-less polymer modulator integrated on a common PIC platform and method

As per the USPTO website the following are published utility patents:

PAT. NO.		Title	
1	11,201,451	T	Porous distributed Bragg reflectors for laser applications
2	11,201,278	T	Josephson Junction using molecular beam epitaxy
3	11,067,748	T	Guide transition device and method
4	11,063,114	T	III-N to rare earth transition in a semiconductor structure
5	11,042,051	T	Direct drive region-less polymer modulator methods of fabricating and materials therefor
6	10,989,871	T	Protection layers for polymer modulators/waveguides
7	10,886,694	T	Hermetic capsule and method
8	10,825,912	T	Integrated epitaxial metal electrodes
9	10,754,093	T	Fabrication process of polymer based photonic apparatus and the apparatus

As per the USPTO website the following are 230 utility patents issued:

PAT. NO.		Title	
1	10,615,141	T	Pnictide buffer structures and devices for GaN base applications
2	10,605,987	T	Re-based integrated photonic and electronic layered structures
3	10,591,755	T	Direct-drive polymer modulator methods of fabricating and materials therefor
4	10,574,025	T	Hermetic capsule and method for a monolithic photonic integrated circuit
5	10,573,686	T	Epitaxial AIN/cREO structure for RF filter applications
6	10,566,944	T	Layer structures for RF filters fabricated using rare earth oxides and epitaxial aluminum nitride

Professor (Dr. Dr.) Michael S. Lebby, B. Eng. (Hons), MBA, Ph.D., D. Eng, Fellow NAI, IEEE, OSA; C. Eng.
1 Hawthorne St., unit 25a, San Francisco, CA 94105, USA; mobile +1 717 839 7078; drmlebby@gmail.com

7	10,527,786	T	Polymer modulator and laser integrated on a common platform and method
8	10,520,673	T	Protection layers for polymer modulators/waveguides
9	10,511,146	T	Guide transition device with digital grating deflectors and method
10	10,509,164	T	Guide transition device and method
11	10,431,729	T	Josephson junction using molecular beam epitaxy
12	10,332,857	T	Rare earth pnictides for strain management
13	10,162,111	T	Multi-fiber/port hermetic capsule sealed by metallization and method
14	10,128,350	T	Integrated epitaxial metal electrodes
15	10,075,143	T	Layer structures for RF filters fabricated using rare earth oxides and epitaxial aluminum nitride
16	9,496,132	T	Nucleation of III-N on REO templates
17	9,443,939	T	Strain compensated REO buffer for III-N on silicon
18	9,236,249	T	III-N material grown on REN epitaxial buffer on Si substrate
19	9,105,471	T	Rare earth oxy-nitride buffered III-N on silicon
20	8,889,978	T	III-V semiconductor interface with graded GeSn on silicon
21	8,878,188	T	REO gate dielectric for III-N device on Si substrate
22	8,872,308	T	AlN cap grown on GaN/REO/silicon substrate structure
23	8,835,955	T	IIIO.sub.xN.sub.y on single crystal SOI substrate and III n growth platform
24	8,823,055	T	REO/ALO/A1N template for III-N material growth on silicon
25	8,823,025	T	III-N material grown on AIO/AIN buffer on Si substrate
26	8,794,010	T	Laser cooling of modified SOI wafer
27	8,748,900	T	Re-silicide gate electrode for III-N device on Si substrate
28	8,680,507	T	A1N inter-layers in III-N material grown on DBR/silicon substrate
29	8,637,763	T	Solar cells with engineered spectral conversion
30	8,636,844	T	Oxygen engineered single-crystal REO template
31	8,633,569	T	AlN inter-layers in III-N material grown on REO/silicon substrate
32	8,623,747	T	Silicon, aluminum oxide, aluminum nitride template for optoelectronic and power devices
33	8,559,097	T	Integrated pump laser and rare earth waveguide amplifier
34	8,553,741	T	Integrated rare earth devices
35	8,542,437	T	Earth abundant photonic structures
36	8,501,635	T	Modification of REO by subsequent III-N EPI process
37	8,455,756	T	High efficiency solar cell using IIIB material transition layers
38	8,394,194	T	Single crystal reo buffer on amorphous SiO.sub.x
39	8,331,413	T	Integrated rare earth devices
40	8,331,410	T	Spontaneous/stimulated light emitting .mu.-cavity device
41	8,049,100	T	Multijunction rare earth solar cell

Professor (Dr. Dr.) Michael S. Lebby, B. Eng. (Hons), MBA, Ph.D., D. Eng, Fellow NAI, IEEE, OSA; C. Eng.
1 Hawthorne St., unit 25a, San Francisco, CA 94105, USA; mobile +1 717 839 7078; drmlebby@gmail.com

42	8,039,738	T	Active rare earth tandem solar cell
43	8,039,737	T	Passive rare earth tandem solar cell
44	7,968,384	T	Stacked transistors and process
45	7,967,653	T	Full color display
46	7,821,066	T	Multilayered BOX in FDSOI MOSFETS
47	7,643,526	T	Spontaneous/stimulated light emitting .mu.-cavity device
48	7,605,531	T	Full color display including LEDs with rare earth active areas and different radiative transistions
49	7,579,623	T	Stacked transistors and process
50	7,538,016	T	Signal and/or ground planes with double buried insulator layers and fabrication process
51	7,388,230	T	Selective colored light emitting diode
52	7,365,357	T	Strain inducing multi-layer cap
53	7,355,269	T	IC on non-semiconductor substrate
54	7,323,396	T	Signal and/or ground planes with double buried insulator layers and fabrication process
55	6,999,644	T	Discrete optoelectric package
56	6,966,703	T	Self eject latch mechanism for an optical transceiver module
57	6,795,461	T	Optoelectric module
58	6,663,296	T	Optoelectric module
59	6,412,989	T	Directable laser transmission module
60	6,243,056	T	Transceiver with miniature virtual image display
61	6,228,440	T	Perishable media information storage mechanism and method of fabrication
62	6,161,106	T	Perishable media system and method of operation
63	6,158,884	T	Integrated communicative watch
64	6,156,582	T	Method of fabricating top emitting ridge VCSEL with self-aligned contact and sidewall reflector
65	6,131,017	T	Dual system portable electronic communicator
66	6,122,023	T	Non-speckle liquid crystal projection display
67	6,121,068	T	Long wavelength light emitting vertical cavity surface emitting laser and method of fabrication
68	6,115,618	T	Portable electronic device with removable display
69	6,111,839	T	Optical pickup head including a coherent first order mode laser light source
70	6,097,748	T	Vertical cavity surface emitting laser semiconductor chip with integrated drivers and photodetectors and method of fabrication
71	6,097,528	T	Microscanner for portable laser diode displays
72	6,096,666	T	Holographic textile fiber
73	6,091,754	T	VCSEL having integrated photodetector for automatic power control
74	6,084,697	T	Integrated electro-optical package

Professor (Dr. Dr.) Michael S. Lebby, B. Eng. (Hons), MBA, Ph.D., D. Eng, Fellow NAI, IEEE, OSA; C. Eng.
1 Hawthorne St., unit 25a, San Francisco, CA 94105, USA; mobile +1 717 839 7078; drmlebby@gmail.com

75	6,080,690	T	Textile fabric with integrated sensing device and clothing fabricated thereof
76	6,069,593	T	Display carrier and electronic display control for multiple displays in a portable electronic device
77	6,064,780	T	Interconnect substrate with a single contact accessible in an upper and an end surface
78	6,061,485	T	Method for wavelength division multiplexing utilizing donut mode vertical cavity surface emitting lasers
79	6,061,380	T	Vertical cavity surface emitting laser with doped active region and method of fabrication
80	6,029,073	T	Display carrier with binocular viewing for a portable electronic device
81	6,026,111	T	Vertical cavity surface emitting laser device having an extended cavity
82	6,022,760	T	Integrated electro-optical package and method of fabrication
83	6,021,147	T	Vertical cavity surface emitting laser for high power single mode operation and method of fabrication
84	6,021,146	T	Vertical cavity surface emitting laser for high power single mode operation and method of fabrication
85	6,008,067	T	Fabrication of visible wavelength vertical cavity surface emitting laser
86	5,978,398	T	Long wavelength vertical cavity surface emitting laser
87	5,974,071	T	VCSEL with integrated photodetectors for automatic power control and signal detection in data storage
88	5,966,399	T	Vertical cavity surface emitting laser with integrated diffractive lens and method of fabrication
89	5,959,315	T	Semiconductor to optical link
90	5,956,364	T	Vertical cavity surface emitting laser with shaped cavity mirror and method of fabrication
91	5,956,363	T	Long wavelength vertical cavity surface emitting laser with oxidation layers and method of fabrication
92	5,953,355	T	Semiconductor laser package with power monitoring system
93	5,946,121	T	IrDA data link with VCSEL light source
94	5,943,359	T	Long wavelength VCSEL
95	5,943,357	T	Long wavelength vertical cavity surface emitting laser with photodetector for automatic power control and method of fabrication
96	5,939,773	T	Semiconductor laser package including a lead frame and plastic resin housing
97	5,936,929	T	Optical submodule and method for making
98	5,923,696	T	Visible light emitting vertical cavity surface emitting laser with gallium phosphide contact layer and method of fabrication
99	5,914,973	T	Vertical cavity surface emitting laser for high power operation and method of fabrication
100	5,906,004	T	Textile fabric with integrated electrically conductive fibers and clothing fabricated thereof
101	5,905,750	T	Semiconductor laser package and method of fabrication

Professor (Dr. Dr.) Michael S. Lebby, B. Eng. (Hons), MBA, Ph.D., D. Eng, Fellow NAI, IEEE, OSA; C. Eng.
1 Hawthorne St., unit 25a, San Francisco, CA 94105, USA; mobile +1 717 839 7078; drmlebby@gmail.com

102	5,903,586	T	Long wavelength vertical cavity surface emitting laser
103	5,898,722	T	Dual wavelength monolithically integrated vertical cavity surface emitting lasers and method of fabrication
104	5,886,972	T	Recording information in a phase change optical medium with a vertical cavity surface emitting laser
105	5,883,912	T	Long wavelength VCSEL
106	5,881,084	T	Semiconductor laser for package with power monitoring system
107	5,848,086	T	Electrically confined VCSEL
108	5,838,707	T	Ultraviolet/visible light emitting vertical cavity surface emitting laser and method of fabrication
109	5,838,703	T	Semiconductor laser package with power monitoring system and optical element
110	5,835,521	T	Long wavelength light emitting vertical cavity surface emitting laser and method of fabrication
111	5,831,960	T	Integrated vertical cavity surface emitting laser pair for high density data storage and method of fabrication
112	5,821,571	T	Dual sided integrated electro-optical package
113	5,818,404	T	Integrated electro-optical package
114	5,815,524	T	VCSEL including GaTlP active region
115	5,796,769	T	Red light vertical cavity surface emitting laser
116	5,789,733	T	Smart card with contactless optical interface
117	5,774,486	T	Waveguide power monitoring system for vertical cavity surface emitting lasers
118	5,764,671	T	VCSEL with selective oxide transition regions
119	5,757,836	T	Vertical cavity surface emitting laser with laterally integrated photodetector
120	5,757,829	T	Flip chip power monitoring system for vertical cavity surface emitting lasers
121	5,757,741	T	CD ROM head with VCSEL or VCSEL array
122	5,751,757	T	VCSEL with integrated MSM photodetector
123	5,751,471	T	Switchable lens and method of making
124	5,748,665	T	Visible VCSEL with hybrid mirrors
125	5,748,161	T	Integrated electro-optical package with independent menu bar
126	5,742,630	T	VCSEL with integrated pin diode
127	5,741,724	T	Method of growing gallium nitride on a spinel substrate
128	5,739,800	T	Integrated electro-optical package with LED display chip and substrate with drivers and central opening
129	5,732,103	T	Long wavelength VCSEL
130	5,719,893	T	Passivated vertical cavity surface emitting laser
131	5,719,892	T	Hybrid mirror structure for a visible emitting VCSEL
132	5,710,441	T	Microcavity LED with photon recycling
133	5,708,280	T	Integrated electro-optical package and method of fabrication
134	5,706,306	T	VCSEL with distributed Bragg reflectors for visible light

Professor (Dr. Dr.) Michael S. Lebby, B. Eng. (Hons), MBA, Ph.D., D. Eng, Fellow NAI, IEEE, OSA; C. Eng.
1 Hawthorne St., unit 25a, San Francisco, CA 94105, USA; mobile +1 717 839 7078; drmlebby@gmail.com

135	5,703,664	T	Integrated electro-optic package for reflective spatial light modulators
136	5,699,073	T	Integrated electro-optical package with carrier ring and method of fabrication
137	5,661,075	T	Method of making a VCSEL with passivation
138	5,654,228	T	VCSEL having a self-aligned heat sink and method of making
139	5,644,369	T	Switchable lens/diffuser
140	5,638,392	T	Short wavelength VCSEL
141	5,636,298	T	Coalescing optical module and method for making
142	5,633,886	T	Short wavelength VCSEL with Al-free active region
143	5,625,734	T	Optoelectronic interconnect device and method of making
144	5,574,744	T	Optical coupler
145	5,563,900	T	Broad spectrum surface-emitting led
146	5,557,626	T	Patterned mirror VCSEL with adjustable selective etch region
147	5,555,341	T	Waveguide with an electrically conductive channel
148	5,550,941	T	Optoelectronic interface module
149	5,546,413	T	Integrated light emitting device
150	5,545,359	T	Method of making a plastic molded optoelectronic interface
151	5,543,958	T	Integrated electro-optic package for reflective spatial light modulators
152	5,540,799	T	Method of fabricating optical waveguide from a laminate
153	5,539,554	T	Integrated electro-optic package for reflective spatial light
154	5,539,200	T	Integrated optoelectronic substrate
155	5,538,919	T	Method of fabricating a semiconductor device with high heat conductivity
156	5,534,888	T	Electronic book
157	5,530,715	T	Vertical cavity surface emitting laser having continuous grading
158	5,521,992	T	Molded optical interconnect
159	5,517,348	T	Voltage controlled transparent layer for a bi-directinal device
160	5,511,138	T	Interlocking waveguide and method of making
161	5,498,883	T	Superluminescent edge emitting device with apparent vertical light emission and method of making
162	5,493,437	T	External communication link for a credit card pager
163	5,491,491	T	Portable electronic equipment with binocular virtual display
164	5,486,946	T	Integrated electro-optic package for reflective spatial light modulators
165	5,485,318	T	Dual image manifestation apparatus with integrated electro-optical package
166	5,482,891	T	VCSEL with an intergrated heat sink and method of making
167	5,482,658	T	Method of making an optoelectronic interface module
168	5,478,774	T	Method of fabricating patterned-mirror VCSELs using selective growth

Professor (Dr. Dr.) Michael S. Lebby, B. Eng. (Hons), MBA, Ph.D., D. Eng, Fellow NAI, IEEE, OSA; C. Eng.
1 Hawthorne St., unit 25a, San Francisco, CA 94105, USA; mobile +1 717 839 7078; drmlebby@gmail.com

169	5,473,716	T	Fiber bundle interconnect and method of making same
170	5,469,185	T	Remote sensory unit and driver
171	5,468,656	T	Method of making a VCSEL
172	5,468,582	T	Fused optical layer and method of making
173	5,467,215	T	Integrated electro-optic package for reflective spatial light modulators
174	5,466,633	T	Optical reading head and method for making same
175	5,452,387	T	Coaxial optoelectronic mount and method of making same
176	5,446,752	T	VCSEL with current blocking layer offset
177	5,437,092	T	Method of making contact areas on an optical waveguide
178	5,432,809	T	VCSEL with Al-free cavity region
179	5,432,630	T	Optical bus with optical transceiver modules and method of manufacture
180	5,428,704	T	Optoelectronic interface and method of making
181	5,422,901	T	Semiconductor device with high heat conductivity
182	5,416,870	T	Optoelectronic interface device and method with reflective surface
183	5,408,547	T	Optical read/write head
184	5,400,423	T	Molded star coupler and method of making same
185	5,400,352	T	Semiconductor laser and method therefor
186	5,390,275	T	Molded waveguide and method for making same
187	5,389,312	T	Method of fabricating molded optical waveguides
188	5,388,120	T	VCSEL with unstable resonator
189	5,369,529	T	Reflective optoelectronic interface device and method of making
190	5,369,415	T	Direct retinal scan display with planar imager
191	5,367,593	T	Optical/electrical connector and method of fabrication
192	5,361,317	T	Assembly with fixture aligning and affixing an optical fiber to an optical device
193	5,359,686	T	Interface for coupling optical fibers to electronic circuitry
194	5,359,669	T	Remote retinal scan identifier
195	5,359,618	T	High efficiency VCSEL and method of fabrication
196	5,358,880	T	Method of manufacturing closed cavity LED
197	5,351,331	T	Method and apparatus for splicing optical fibers with signal I/O
198	5,351,257	T	VCSEL with vertical offset operating region providing a lateral waveguide and current limiting and method of fabrication
199	5,349,210	T	Optical reading head with angled array
200	5,348,616	T	Method for patterning a mold
201	5,345,530	T	Molded waveguide and method for making same
202	5,345,527	T	Intelligent opto-bus with display

Professor (Dr. Dr.) Michael S. Lebby, B. Eng. (Hons), MBA, Ph.D., D. Eng, Fellow NAI, IEEE, OSA; C. Eng.
1 Hawthorne St., unit 25a, San Francisco, CA 94105, USA; mobile +1 717 839 7078; drmlebby@gmail.com

203	5,345,524	T	Optoelectronic transceiver sub-module and method for making
204	5,337,397	T	Optical coupling device and method for making
205	5,337,391	T	Optoelectronic sub-module and method of making same
206	5,335,300	T	Method of manufacturing I/O node in an optical channel waveguide and apparatus for utilizing
207	5,325,451	T	Modular optical waveguide and method for making
208	5,324,964	T	Superluminescent surface light emitting device
209	5,323,477	T	Contact array imager with integral waveguide and electronics
210	5,313,545	T	Molded waveguide with a unitary cladding region and method of making
211	5,309,537	T	Optoelectronic coupling device and method of making
212	5,286,982	T	High contrast ratio optical modulator
213	5,282,071	T	Contact areas on an optical waveguide and method of making
214	5,276,762	T	Magnetic holding methods for optical fiber I/O assembly
215	5,276,754	T	Optoelectronic mount and method for making
216	5,271,083	T	Molded optical waveguide with contacts utilizing leadframes and method of making same
217	5,265,184	T	Molded waveguide and method for making same
218	5,249,245	T	Optoelectroinc mount including flexible substrate and method for making same
219	5,230,030	T	Interface coupling electronic circuitry
220	5,228,101	T	Electrical to optical links using metalization
221	5,225,816	T	Electrical connector with display
222	5,218,465	T	Intelligent interconnects for broadband optical networking
223	5,172,384	T	Low threshold current laser
224	5,170,448	T	Optical waveguide apparatus and method for partially collecting light
225	5,125,054	T	Laminated polymer optical waveguide interface and method of making same
226	5,116,461	T	Method for fabricating an angled diffraction grating
227	5,068,007	T	Etching of materials in a noncorrosive environment
228	5,067,829	T	Dynamic optical beam steering
229	5,045,908	T	Vertically and laterally illuminated p-i-n photodiode
230	5,034,092	T	Plasma etching of semiconductor substrates

PUBLICATIONS (Papers)

1. C. Eschenbaum, A. Mertens, C. Fullner, A. Kuzmin, A. Schwarzenberger, A. Kotz, G. Ramann, M. Chen, J. Drisko, B. Johnson, J. Zyskind, J. Marcelli, M. Lebby, W. Freude, S. Randel, C. Koos, "Thermally Stable Silicon-Organic Hybrid (SOH) Mach-Zehnder

Professor (Dr. Dr.) Michael S. Lebby, B. Eng. (Hons), MBA, Ph.D., D. Eng, Fellow NAI, IEEE, OSA; C. Eng.
1 Hawthorne St., unit 25a, San Francisco, CA 94105, USA; mobile +1 717 839 7078; drmlebby@gmail.com

Modulator for 140 GBd PAM4 transmission with Sub-1V Drive Signals" ECOC Post Deadline session 1; 13:42 to 13:54pm, 22nd September 2022; "Thermally Stable Silicon-Organic Hybrid (SOH) Mach-Zehnder Modulator for 140 GBd PAM4 Transmission With Sub-1 v Drive Signals (Th3B.2) given by Carsten Eschenbaum, *Karlsruhe Inst Tech (KIT)* and SilOriX Gmbh.

2. Amir Abbas Kashi; Jos J. G. M. Van der Tol; Kevin A. Williams; Weiming Yao; Michael S. Lebby; Cory Pecinovsky; and Yuqing Jiao' "**Electro-Optic Slot Waveguide Phase Modulator on the InP Membrane on Silicon Platform**" IEEE Journal of Quantum Electronics, Year: 2021 | Volume: 57, Issue: 1, pages 1-10.
3. Ristic, S.; Tolstikhin, V.; Pimenov, K.; Watson, C.;Florjanczyk, M.; and **Lebby, M**.; "100Gb/s Multi-Guide Vertical Integration Transmitter PIC in InP for Fiber-Optics Interconnects," Poster paper P2.20, ECOC 22-27th Sept, 2013, London, UK http://www.ecoc2013.org/sc2.html.
4. Dargis, R.; Williams, D.; Smith, R.; Arkun, E.; Semans, S; Vosters, G.; **Lebby, M**.; and Clark, A., "Study of the Structural and Thermal Properties of Single Crystalline Epitaxial Rare-Earth-Metal Oxide Layers Grown on Si," (2011); ECS Transactions **doi: 10.1149/1.3633032,** ECS Trans. **2011** volume 41, issue 3, **161-167** http://www.ecsdl.org/getabs/servlet/GetabsServlet?prog=normal&id=ECSTF8000041000003000161000001&idtype=cvips&gifs=yes&ref=no.
5. Dargis, Rytis; Arkun, E. ; Clark, Andrew ; Roucka, R. ; Smith, Robin ; Williams, David ; **Lebby, Michael** ; Demkov, Alexander A. "Rare-earth-metal oxide buffer for epitaxial growth of single crystal GeSi and Ge on Si(111)," Journal of Vacuum Science & Technology Volume:30 Issue:2
6. Dargis. R, Clark. A, Arkun. F.E, Smith. R, **Lebby. M**, "Engineering of the Interface between Silicon and Rare-Earth Oxide Buffer for GaN Growth," ECS Meeting, 27 October, 2013, San Francisco, USA. Doi: 10.1063/1.4753828.
7. Roucka. R, Clark. A, Semans. S, Tolle. J, **Lebby. M,** "Scalable virtual Ge templates for III-V integration on Si wafers," 8th International conference on concentrating photovoltaic systems: CPV8, 16-18th April 2012, Toledo, Spain.
8. R. Dargisa, A. Clarka, E. Arkuna, R. Rouckaa, R. Smitha, A.A. Demkovb, **M. Lebby**a**,** "Growth and application of epitaxial heterostructures with polymorphous rare-earth oxides," Journal of Crystal Growth, Volume 378, 1 September 2013, Pages 177–179.
9. Rytis Dargis*, Erdem F. Arkun, Radek Roucka, Robin Smith, David Williams, Andrew Clark, **Michael Lebby**, "Epitaxial Si, SiGe and Ge on binary and ternary rare earth oxide buffers;" physica status solidi (c). Special Issue: E-MRS 2012 Spring Meeting – Symposium A, see further papers in Phys. Status Solidi A 209, No. 10 (2012). Volume 9, Issue 10-11, pages 2031–2035, October 2012.
10. F. Erdem Arkuna, **Michael Lebby**b, Rytis Dargisb, Radek Rouckab, Robin S. Smithb and
Andrew Clarkb "Scalable GaN-on-Silicon Using Rare Earth Oxide Buffer Layers," doi: 10.1149/05009.1065ecst *ECS Trans.* 2013 volume 50, issue 9, 1065-1071 [Electrochemical Society].

Professor (Dr. Dr.) Michael S. Lebby, B. Eng. (Hons), MBA, Ph.D., D. Eng, Fellow NAI, IEEE, OSA; C. Eng.
1 Hawthorne St., unit 25a, San Francisco, CA 94105, USA; mobile +1 717 839 7078; drmlebby@gmail.com

11. R. Dargisz, A. Clark, E. Arkun, R. Roucka, D. Williams, R. Smith and **M. Lebby** "Epitaxial Si and Gd_2O_3 Heterostructures: Distributed Bragg Reflectors with Stress Management Function for GaN on Si Light Emitting Devices,"; doi: 10.1149/2.004206jss *ECS J. Solid State Sci. Technol.* 2012 volume 1, issue 5, P246-P249.
12. R. Dargisz, D. Williams, R. Smith, E. Arkun, R. Roucka, A. Clark and **M. Lebby** "Structural and Thermal Properties of Single Crystalline Epitaxial Gd_2O_3 and Er_2O_3 Grown on Si(111),"; 10.1149/2.005202jss *ECS J. Solid State Sci. Technol.* 2012 volume 1, issue 2, N24-N28
13. F. Erdem Arkun*, Rytis Dargis, Robin Smith, David Williams, Andrew Clark, **Michael Lebby** "Integrated high reflectivity silicon substrates for GaN LEDs," physica status solidi (c) Volume 9, Issue 3-4, pages 814–817, March 2012.
14. Rytis Dargisa, Andrew Clarka, Erdem Arkuna, Radek Rouckaa, David Williamsa, Robin S. Smitha and **Michael Lebby**a ,"Epitaxial Si and Gd_2O_3 Heterostructures - Distributed Bragg Reflectors with Stress Management Function for GaN on Si Light Emitting Devices,"; doi: 10.1149/05004.0047ecst *ECS Trans.* 2013 volume 50, issue 4, 47-52.
15. Rytis Dargisa, David Williamsa, Robin Smitha, Erdem Arkuna, Scott Semansa, Gary Vostersa**, Michael Lebby**a and Andrew Clarka, "Study of the Structural and Thermal Properties of Single Crystalline Epitaxial Rare-Earth-Metal Oxide Layers Grown on Si(111),"; doi: 10.1149/1.3633032 *ECS Trans.* 2011 volume 41, issue 3, 161-167.
16. Williams, D.; Clark, A.; Arkun, E.; Jamora, A.; Vosters, G.; **Lebby, M**., "Silicon light emitting device based on rare earth oxide superlattice," 2010 7th IEEE International Conference on Group IV Photonics, Beijing, Sept. 2010.
17. **Lebby, M**., "Photonic integration: what is the Holy Grail?" Compound Semiconductor , vol.15 , no.7 , pp.25-32, Oct. 2009, http://www.compoundsemiconductor.net/csc/magazine.php?mon=1&year=2009.
18. **Lebby, M.S**., "Green photonics technology and markets," Electronics Letters, vol. 45 , no. 20, pp.1007, Sept. 2009. DOI: 10.1049/el.2009.2563, Print ISSN 0013-5194, Online ISSN 1350-911X.
19. Yang, A.; **Lebby, M**.; Varsa, E., "Photonics Industry-University Collaborations (PICs) Final Technical Rept. 22 Apr-30 Jul 2008, Optoelectronics Industry Development Association, June 2009.
20. **Lebby, M.S**., "Testimony before the US-China Economic and Security Review Commission on the optoelectronics industry", 24th March, 2009 (http://www.oida.org/news/oida-news/2009/381)
21. **Lebby, M**.; Clayton, R., "Growing at light speed [Optoelectronics]," Circuits Assembly, vol. 18, no. 9, pp. 44-5, Sept. 2007.
22. Huff, D.B.; **Lebby, M.S**., "Fiber optic sensing technology: emerging markets and trends," Proceedings of the SPIE - The International Society for Optical Engineering, vol. 6619, pp. 661902 (7 pp.), July 2007.
23. **Lebby, M.S**. and Clayton, R, Optoelectronics Roadmap OIDA-iNEMI, IEEE Packaging and Assembly, May 2007.
24. **Lebby, Michael**, "A new model for the optoelectronic indium-based semiconductor industry," Optics and Photonics News, May 2006.

Professor (Dr. Dr.) Michael S. Lebby, B. Eng. (Hons), MBA, Ph.D., D. Eng, Fellow NAI, IEEE, OSA; C. Eng.
1 Hawthorne St., unit 25a, San Francisco, CA 94105, USA; mobile +1 717 839 7078; drmlebby@gmail.com

25. **Lebby, M**., "Optical components and their role in optical networks," 2001 Proceedings. 51st Electronic Components and Technology Conference, 2001.
26. **Lebby, M**., "OEICs: commercialization at last," Compound Semiconductor, vol. 7, no. 6, pp. 81-2, 85, July 2001.
27. **M. S. Lebby** & W. B. Jiang. "Packaging of Optical Components and Systems," Wiley Encyclopedia of Electrical and Electronics Engineering, Vol 15 pp 499-516. John G. Webster (Ed.), John Wiley & Sons, New Jersey, 1999.
28. W. B. Jiang, & **M. S. Lebby**, "Optical Sources: Light-emitting diodes and laser technology," Handbook of fiber optic data communication, C. DeCusatis, et al, (Ed.), Academic Press, 1998.
29. W. B. Jiang, & **M. S. Lebby**, "Semiconductor laser and light emitting diode fabrication," Handbook of fiber optic data communication, C. DeCusatis, et al, (Ed.), Academic Press, 1998.
30. Berry, G.; Summers, H.D.; Blood, P.; Claisse, P.; **Lebby, M**., "Optical bistability in vertical cavity surface emitting lasers with a simple intra-cavity epitaxial absorber layer," Conference Digest. ISLC 1998 NARA. 1998 IEEE 16th International Semiconductor Laser Conference, 1998.
31. Jiang, W.; Norton, L.; Kiely, P.; Schwartz, D.; Gable, B.; **Lebby, M**.; Raskin, G., "Vertical cavity surface emitting laser-based parallel optical data link," Optical Engineering, vol. 37, no. 12, pp. 3113-18, Dec. 1998.
32. Robertsson, M.E.; Hagel, O.J.; Gustafsson, G.; Dabek, A.; Popall, M.; Cergel, L.; Wennekers, P.; Kiely, P.; **Lebby, M.**; Lindahl, T., "O/e-MCM packaging with new, patternable dielectric and optical materials," 1998 Proceedings. 48th Electronic Components and Technology Conference, pp. 1413-21, May 1998.
33. Popall, M.; Dabek, A.; Robertsson, M.E.; Gustafsson, G.; Hagel, O.-J.; Olsowski, B.; Buestrich, R.; Cergel, L.; **Lebby, M**.; Kiely, P.; Joly, J.; Lambert, D.; Schaub, M.; Reichl, H., "ORMOCERsTM-new photo-patternable dielectric and optical materials for MCM-packaging," 1998 Proceedings. 48th Electronic Components and Technology Conference, May 1998.
34. Claisse, P.R.; Jiang, W.; Kiely, P.A.; Roll, M.; Boughter, L.; Sanchez, P.; Cotney, D.; **Lebby, M**.; Webb, B.; Lawrence, B., "Automatic power control of a VCSEL using an angled lid TO56 package," 1998 Proceedings. 48th Electronic Components and Technology Conference, May 1998.
35. **Lebby, M. S**., "VCSEL Devices and Packaging for Fiber Optic Transceivers," Integrated Photonics Research, paper MD1, March 30th, 1998.
36. **Lebby, M.S**.; Claisse, P.; Jiang, W.; Kiley, P.; Roll, M.; Boughter, L.; Sanchez, P.; Lawrence, B., "VCSEL devices and packaging," Proceedings of the SPIE - The International Society for Optical Engineering, vol. 3289, pp.2-12, Jan. 1998.
37. Popall, M.; Dabek, A.; Robertsson, M.E.; Gustafsson, G.; Hagel, O.-J.; Olsowski, B.; Buestrich, R.; Cergel, L.; **Lebby, M**.; Kiely, P.; Joly, J.; Lambert, D.; Schaub, M.; Reichl, H., "ORMOCERs - new photo-patternable dielectric and optical materials for MCM-packaging," Proceedings of the 1998 48th Electronic Components & Technology Conference, Jan. 1998.

Professor (Dr. Dr.) Michael S. Lebby, B. Eng. (Hons), MBA, Ph.D., D. Eng, Fellow NAI, IEEE, OSA; C. Eng.
1 Hawthorne St., unit 25a, San Francisco, CA 94105, USA; mobile +1 717 839 7078; drmlebby@gmail.com

38. **Lebby, M**., "Optoelectronic Devices and Packaging Technology," 4th IEEE Workshop on AST Phoenix Research Center, IEEE, Jan 1998.
39. Jiang, W.; Claisse, P.; Gaw, C.; Kiely, P.; Lawrence, B.; **Lebby, M**.; Roll, M., "Vertical cavity surface emitting laser packaging with auto power control," 1997 Proceedings. 47th Electronic Components and Technology Conference, pp. 368-70, May 1997.
40. Gaw, C.A.; Jiang, W.; **Lebby, M**.; Kiely, P.A.; Claisse, P.R., "Characteristics of VCSELs and VCSEL arrays for optical data links," Proceedings of the SPIE - The International Society for Optical Engineering, vol. 3004, pp. 122-33, Feb. 1997.
41. Raskin, G.; **Lebby, M.S**.; Carney, F.; Kazakia, M.; Schwartz, D.B.; Gaw, C.A., "Parallel interconnect for a novel system approach to short distance high information transfer data links," Proceedings of the SPIE - The International Society for Optical Engineering, vol. 3038, pp. 165-74, Feb. 1997.
42. Jiang, W.; Gaw, C.; Kiely, P.; Lawrence, B.; **Lebby, M**.; Claisse, P.R., "Effect of proton implantation on the degradation of GaAs/AlGaAs vertical cavity surface emitting lasers," Electronics Letters, vol. 33, no.2, pp. 137-9, Jan. 1997.
43. Jiang, W.; Gaw, C.; Kiely, P.; Lawrence, B.; **Lebby, M**.; Ramdani, J.; Claisse, P., "Relative intensity noise of 780 nm vertical cavity surface emitting lasers," Proceedings of the 1997 Pacific Rim Conference on Lasers and Electro-Optics, CLEO/Pacific Rim, No. 46984, Jan. 1997.
44. Schwartz, D.B.; Chun, C.K.Y.; Foley, B.M.; Hartman, D.H.; **Lebby, M**.; Lee, H.C.; Chan Long Shieh; Kuo, S.M.; Shook, S.G.; Webb, B., "A low-cost high-performance optical interconnect," (1996), http://ieeexplore.ieee.org/xpl/freeabs_all.jsp?arnumber=533892.
45. **Lebby, M**.; Gaw, C.A.; Jiang, W.; Kiely, P.A.; Claisse, P.R.; Grula, J., "Key challenges and results of VCSELs in data links," Conference Proceedings. LEOS '96 9th Annual Meeting. IEEE Lasers and Electro-Optics Society 1996 Annual Meeting, pp. 167-8, vol. 2, Nov. 1996.
46. Schwartz, D.B.; Carney, F.; Chun, C.K.Y.; Claisse, P.; Foley, B.M.; Gaw, C.; Hartman, D.H.; Kiely, P.; Knapp, J.; Wenbin Jiang; Shun Meen Kuo; **Lebby, M**.; Planer, S.; Norton, L.J.; Raskin, G.; Sauvageau, J.; Chan Long Shieh; Shook, S.G.; Tapp, S., "Low-cost high-performance optical interconnect," CLEO '96. Summaries of Papers Presented at the Conference on Lasers and Electro-Optics., vol. 9. 1996 Technical Digest Series. Conference Edition, June 1996.
47. **Lebby, M**.; Gaw, C.A.; Jiang, W.; Kiely, P.A.; Chan Long Shieh; Claisse, P.R.; Ramdani, J.; Hartman, D.H.; Schwartz, D.B.; Grula, J., "Characteristics of VCSEL arrays for parallel optical interconnects," 1996 Proceedings. 46th Electronic Components and Technology Conference, pp. 279-91, May 1996.
48. **Lebby, M**., "Characteristics of VCSEL Parallel Optical Interconnecters,", IEEE, May 1996.
49. **Lebby, M**.; Gaw, C.A.; Jiang, W.; Kiely, P.A.; Chan Long Shieh; Claisse, P.R.; Ramdani, J.; Hartman, D.H.; Schwartz, D.B.; Grula, J., "Use of VCSEL arrays for parallel optical interconnects," Proceedings of the SPIE - The International Society for Optical Engineering, vol. 2683, pp. 81-91, Feb. 1996.

Professor (Dr. Dr.) Michael S. Lebby, B. Eng. (Hons), MBA, Ph.D., D. Eng, Fellow NAI, IEEE, OSA; C. Eng.
1 Hawthorne St., unit 25a, San Francisco, CA 94105, USA; mobile +1 717 839 7078; drmlebby@gmail.com

50. **Lebby, M**.; Gaw, C.A.; Jiang, W.; Kiely, P.A.; Shieh, C.L.; Claisse, P.R.; Ramdani, J.; Hartman, D.H.; Schwartz, D.B.; Chun, C.K.Y.; Foley, B.M., "Parallel optical interconnects using VCSELs," Proceedings. IEEE/Cornell Conference on Advanced Concepts in High Speed Semiconductor Devices and Circuits, pp. 348-56, Aug. 1995.
51. Schwartz, D.B.; Chun, C.K.Y.; Foley, B.M.; Hartman, D.H.; **Lebby, M**.; Lee, H.C.; Chan Long Shieh; Shun Meen Kuo; Shook, S.G.; Webb, B., "A low cost, high performance optical interconnect," (May 1995), http://ieeexplore.ieee.org/xpl/freeabs_all.jsp?arnumber=514410.
52. Kiely, P.A.; Taylor, G.W.; Izabelle, A.; **Lebby, M.S**.; Tell, B.; Brown-Goebeler, K.F.; Chang, T.-Y., "An n-channel BICFET in the InGaAs/InAlGaAs/InAlAs material system," IEEE Electron Device Letters, vol. 10, no. 7, pp. 304-6, July 1989.
53. **Lebby, M.S**.; Kiely, P.A.; Taylor, G.W., "Reactive ion etching (RIE) and magnetron ion etching (MIE) combinations for opto-electronic integrated circuit (OEIC) processing," Proceedings of the SPIE - The International Society for Optical Engineering, vol. 1037, pp.88-96, Nov. 1988.
54. Taylor, G.W.; Crawford, D.L.; Kiely, P.A.; Cooke, P.; Sargood, S.; Izabelle, A.; Chang, T.Y.; Tell, B.; **Lebby, M.S**.; Brown-Goebeler, K.; Simmons, J.G., "An inversion channel technology for opto-electronic integration," Proceedings of the SPIE - The International Society for Optical Engineering, vol. 994 , pp. 251-7, 1989.
55. Taylor, G.W.; Kiely, P.A.; Izabelle, A.; Crawford, D.L.; **Lebby, M.S**.; Chang, T.-Y.; Tell, B.; Goebeler, K.B.; Simmons, J.G., "An n-channel BICFET in the GaAs/AlGaAs material system," IEEE Electron Device Letters, vol. 10, no. 2, pp. 88-90, Feb. 1989.
56. G. W. Taylor, **M. S. Lebby**, T. Y. Chang, R. P. Gnall, N. Sauer, B. Tell, and J. G. Simmons, " Very High Transconductance HFET", *IEEE International Electron Devices Conference and Proceedings*, LA, Dec 1988.
57. Crawford, D.L.; Taylor, G.W.; Kiely, P.A.; Cooke, P.; Izabelle, A.; Chang, T.Y.; Tell, B.; **Lebby, M.S**.; Brown-Goebeler, K.; Simmons, J.G., "An inversion channel technology for opto-electronic integration," Fourteenth European Conference on Optical Communication, No. 292, vol. 1, pp. 211-14, Sept. 1988.
58. Taylor, G.W.; **Lebby, M.S**.; Kiely, P.A.; Cooke, P.; Isabelle, A.; Chang, T.Y.; Tell, B.; Crawford, D.L.; Brown-Goebeler, K.; Simmons, J.G., "Performance and advantages of BICFETs versus HBTs," Proceedings of the 1988 Bipolar Circuits and Technology Meeting, pp. 41-5, Sept. 1988.
59. Taylor, G.W.; Crawford, D.L.; Kiely, P.A.; Sargood, S.K.; Cooke, P.; Izabelle, A.; Chang, T.Y.; Tell, B.; **Lebby, M.S**.; Brown-Goebeler, K.; Simmons, J.G., "GaAs/AlGaAs inversion channel devices for an integrated opto-electronic technology," IEEE Transactions on Electron Devices, vol. 35, no. 12, pp. 2446, June 1988.
60. **Lebby, M.S**.; Taylor, G.W.; Izabelle, A.; Tell, B.; Brown-Goebeler, K.; Chang, T.-Y.; Simmons, J.G., "A p-channel BICFET in the InGaAs/InAlAs material system," IEEE Electron Device Letters, vol. 9 , no. 6 , pp. 278-80, June 1988.
61. Taylor, G.W.; **Lebby, M.S**.; Izabelle, A.; Tell, B.; Brown-Goebeler, K.; Chang, T.-Y.; Simmons, J.G., "Demonstration of a p-channel GaAs/AlGaAs BICFET," IEEE Electron Device Letters, vol. 9, no.2, pp.84-6, Feb. 1988.

Professor (Dr. Dr.) Michael S. Lebby, B. Eng. (Hons), MBA, Ph.D., D. Eng, Fellow NAI, IEEE, OSA; C. Eng.
1 Hawthorne St., unit 25a, San Francisco, CA 94105, USA; mobile +1 717 839 7078; drmlebby@gmail.com

62. Taylor, Geoffrey; **Lebby, M S**; Izabelle, A; Tell, B; Brown-Goebeler, K., "Demonstration of a p-channel GaAs/AlGaAs BICFET (Bipolar Inversion- Channel)," IEEE Electron Device Letters, vol. 9, pp. 84-86, Feb. 1988.
63. **Lebby, Michael Stephen**, "Fabrication And Characterisation Of The Heterojunction Field Effect Transistor (Hfet) And The Bipolar Inversion Channel Field Effect Transistor (Bicfet): Characterisation Of Hfets And Bicfets, Fabricated From Gallium-Arsenide/Aluminum-Gallium - Arsenide With Magnetron Ion Etching, Sputtered Tungsten Gates, Ion Implanted Source/Drain Contacts And Rapid Thermal Anneals," University Of Bradford, UK, 1987.
64. Taylor, G.W.; **Lebby, M.S**.; Chang, T.Y.; Gnall, R.N.; Sauer, N.; Tell, B.; Simmons, J.G., "GaAs/AlGaAs inversion channel devices for an integrated opto-electronic technology," Electronics Letters, vol. 23, no. 2, pp. 77-9, Jan. 1987.
65. Taylor, G.W.; **Lebby, M.S**.; Chang, T.Y.; Gnall, R.N.; Sauer, N.; Tell, B.; Tennant, D.M.; Simmons, J.G., "A new heterostructure FET," International Electron Devices Meeting 1986. Technical Digest, pp. 817-21, Dec. 1986.

PUBLIC MEDIA (Books, Chapters, Reports, Abstracts, Videos, Lectures, Speeches, Reviews, Courses, Talks, Invited Talks, Keynote Talks, Plenary Talks, Webinars, Interviews, Articles, etc.)

1986

1) Paper: A new heterostructure FET
    a. Dec 1986
    b. "Electron Devices Meeting, 1986 International Volume: 32 Digital Object Identifier: 10.1109/IEDM.1986.191323 Publication Year: 1986, Page(s): 817-821"

1987

2) Thesis: Fabrication and characterization of the heterojunction field effect transistor and the bipolar inversion channel field effect transistor
    a. 1987
    b. Characterization of HFETs and BICFETs fabricated from GaAs/AlGaAs with magnetron ion etching, sputtered tungsten gates, ion implanted source/drain contacts and rapid thermal anneals.
    c. University of Bradford, UK 1987

Professor (Dr. Dr.) Michael S. Lebby, B. Eng. (Hons), MBA, Ph.D., D. Eng, Fellow NAI, IEEE, OSA; C. Eng.
1 Hawthorne St., unit 25a, San Francisco, CA 94105, USA; mobile +1 717 839 7078; drmlebby@gmail.com

   d. http://www.edt.brad.ac.uk/home/
3) http://ieeexplore.ieee.org/stamp/stamp.jsp?tp=&arnumber=1486581Paper: Very high-transconductance heterojunction field-effect transistor (HFET)
   a. Jan 1987
   b. "A new form of FET has been demonstrated in the GaAs/AlGaAs material system. Designated the HFET, it has shown a transconductance of 500mS/mm at 300 K for a nominal Lg = 2/un and a drain current of 430mA/mm. The conduction occurs in an inversion channel at the heterointerface"
   c. "Electronics Letters Volume: 23, Issue: 2 Digital Object Identifier: 10.1049/el:19870056 Publication Year: 1987 , Page(s): 77 - 79"
   d. http://ieeexplore.ieee.org/stamp/stamp.jsp?tp=&arnumber=4257306
4) Talk and abstract: Magnetron Ion Etching of self aligned HFETs
   a. May 1987
   b. Electrochemical Society (ECS) Conference proceedings SOTAPOCS VI, Compound Semiconductors, Philadelphia
   c. http://www.electrochem.org/meetings/biannual/past_meetings_list.htm

1988

5) Paper: Demonstration of a p-channel GaAs/AlGaAs BICFET
   a. Feb 1988
   b. "Electron Device Letters, IEEE Volume: 9, Issue: 2 Digital Object Identifier: 10.1109/55.2048 Publication Year: 1988 , Page(s): 84 - 86"
   c. http://ieeexplore.ieee.org/stamp/stamp.jsp?tp=&arnumber=2048
6) Paper: GaAs/AlGaAs inversion channel devices for an integrated opto-electronic technology
   a. Jun 1988
   b. "Electron Devices, IEEE Transactions on Volume: 35, Issue: 12 Digital Object Identifier: 10.1109/16.8871 Publication Year: 1988"
   c. http://ieeexplore.ieee.org/stamp/stamp.jsp?tp=&arnumber=8871
7) Paper: A p-channel BICFET in the InGaAs/InAlAs material system
   a. Jun 1988
   b. "Electron Device Letters, IEEE Volume: 9, Issue: 6 Digital Object Identifier: 10.1109/55.716 Publication Year: 1988 , Page(s): 278 - 280"
   c. http://ieeexplore.ieee.org/stamp/stamp.jsp?tp=&arnumber=716&tag=1
8) Paper: An inversion channel technology for opto-electronic integration
   a. Sep 1988
   b. "Optical Communication, 1988. (ECOC 88). Fourteenth European Conference on (Conf. Publ. No.292), Publication Year: 1988, Page(s): 211 - 214 vol.1"

Professor (Dr. Dr.) Michael S. Lebby, B. Eng. (Hons), MBA, Ph.D., D. Eng, Fellow NAI, IEEE, OSA; C. Eng.
1 Hawthorne St., unit 25a, San Francisco, CA 94105, USA; mobile +1 717 839 7078; drmlebby@gmail.com

9) http://ieeexplore.ieee.org/stamp/stamp.jsp?tp=&arnumber=93560 Paper: Performance and advantages of BICFETs versus HBTs
    a. Sep 1988
    b. "Bipolar Circuits and Technology Meeting, 1988., Proceedings of the 1988 Digital Object Identifier: 10.1109/BIPOL.1988.51041 Publication Year: 1988 , Page(s): 41- 45"
    c. http://ieeexplore.ieee.org/stamp/stamp.jsp?tp=&arnumber=51041
10) Talk and abstract: RIE and MIE comparison for optoelectronic integrated circuit processing
    a. Nov 1988
    b. IEEE LEOS Conference, Santa Clara, California
11) Paper: Reactive ion etching (RIE) and magnetron ion etching (MIE) combinations for opto-electronic integrated circuit (OEIC) processing
    a. Nov 1988
    b. Proc. SPIE Vol. 1037, p. 88, Monitoring and Control of Plasma-Enhanced Processing of Semiconductors, James E. Griffiths; Ed.
    c. http://spie.org/x648.html?product_id=951018

1989

1) Paper: An n-channel BICFET in the InGaAs/InAlGaAs/InAlAs material system
    a. 1989
    b. "Electron Device Letters, IEEE Volume: 10 , Issue: 7 Digital Object Identifier: 10.1109/55.29660 Publication Year: 1989 , Page(s): 304 - 306"
    c. http://ieeexplore.ieee.org/stamp/stamp.jsp?tp=&arnumber=29660&tag=1
2) Paper: An n-channel BICFET in the GaAs/AlGaAs material system
    a. Feb 1989
    b. "Electron Device Letters, IEEE Volume: 10, Issue: 2 Digital Object Identifier: 10.1109/55.32438 Publication Year: 1989 , Page(s): 88 - 90"
    c. http://ieeexplore.ieee.org/stamp/stamp.jsp?tp=&arnumber=32438&tag=1
3) Paper: An Inversion Channel Technology For Opto-Electronic Integration
    a. 8th Feb 1989
    b. A new approach to optoelectronic integration is reported which combines electronic and optical devices fabricated with a common sequence and a single MBE wafer growth. The devices have in common, an inversion layer structure produced by charge sheet doping.
    c. Proceedings Vol. 0994 Optoelectronic Materials, Devices, Packaging, and Interconnects II, Glen M. McWright; Henry J. Wojtunik, Editors, pp.251-510 Date: 9 February 1989 ISBN: 9780819400291

Professor (Dr. Dr.) Michael S. Lebby, B. Eng. (Hons), MBA, Ph.D., D. Eng, Fellow NAI, IEEE, OSA; C. Eng.
1 Hawthorne St., unit 25a, San Francisco, CA 94105, USA; mobile +1 717 839 7078; drmlebby@gmail.com

d. http://spie.org/x648.html?product_id=960136

1991

4) Invited talk and abstract: Use of VCSELs for the MONSOON parallel digital computer
    a. Jan 1991
    b. International workshop on architectures for free-space digital computing, Colorado.
5) Invited Paper and Presentation: Approaching the problem of high-density interconnects in the 'Monsoon' data-flow parallel processor with optics"
    a. 28th Jan1991
    b. AFOSR, ONR, DARPA: A compendium of position papers from the workshop on architectures for free space digital optical computing
    c. http://www.researchgate.net/publication/235184814_A_Compendium_of_Position_Papers_from_the_Workshop_on_Architectures_for_Free_Space_Digital_Optical_Computing_Held_in_Vail_Colorado_on_28-30_January_1991

1993

6) Invited talk and abstract: Optoelectronic Devices and Applications
    a. 1993
    b. IEEE workshop on optical interconnects
7) Invited talk and abstract: VCSEL Technology and Progress
    a. 1993
    b. IEEE Waves and Devices, Phoenix Section, Tempe, Arizona, Arizona State University

1994

8) Invited talk and abstract: Ridge waveguide VCSELs: improvement over planar VCSELs
    a. May 1994

Professor (Dr. Dr.) Michael S. Lebby, B. Eng. (Hons), MBA, Ph.D., D. Eng, Fellow NAI, IEEE, OSA; C. Eng.
1 Hawthorne St., unit 25a, San Francisco, CA 94105, USA; mobile +1 717 839 7078; drmlebby@gmail.com

   b. USA Laser workshop, CLEO, Baltimore, MD
9) Invited talk and abstract: Packaging VCSELs with GUIDECAST(tm) an overmolded waveguide packaging platform
   a. Aug 1994
   b. IEEE Tropical workshop on optoelectronic packaging, Breckenridge, Colorado.

1995

10) Paper: Parallel optical interconnects using VCSELs
   a. 1995
   b. "High Speed Semiconductor Devices and Circuits, 1995. Proceedings., IEEE/Cornell Conference on Advanced Concepts in Digital Object Identifier: 10.1109/CORNEL.1995.482526 Publication Year: 1995 , Page(s): 348 - 356"
   c. http://ieeexplore.ieee.org/stamp/stamp.jsp?tp=&arnumber=482526
11) Book: Research in VCSEL devices - Annual technical review1995
   a. 1995
   b. Annual collection of optoelectronic device and reliability department papers at the photonics technology center, Motorola, Tempe, USA.
   c. Key focus was the commercialization of VCSEL technology, especially at 850nm for the Optobus™ parallel array product and other associated VCSEL prototypes.
   d. Motorola
12) Invited talk and abstract: Ridge waveguide VCSEL device performance
   a. May 1995
   b. USA Laser workshop, CLEO, Anaheim, California
13) Invited talk and abstract: VCSEL Arrays and GUIDECAST(tm) packaging technology as used in OPTOBUS(tm)
   a. Sep 1995
   b. European Laser Workshop, Eindhoven, Netherlands

1996

14) Book: Research in optoelectronic devices volume II
   a. 1996
   b. Annual collection of optoelectronic device and reliability department papers at the photonics technology center, Motorola, Tempe, USA. Key focus was the

Professor (Dr. Dr.) Michael S. Lebby, B. Eng. (Hons), MBA, Ph.D., D. Eng, Fellow NAI, IEEE, OSA; C. Eng.
1 Hawthorne St., unit 25a, San Francisco, CA 94105, USA; mobile +1 717 839 7078; drmlebby@gmail.com

commercialization of VCSEL technology, especially at 850nm for the optobus parallel array product and other associated VCSEL prototypes. Demonstration of 660nm VCSELs discussed.

c. Motorola

15) Paper: Low-cost high-performance optical interconnect
    a. 1996
    b. Proceedings, Conference on Lasers and Electro-Optics, (CLEO), vol 9, 1996
    c. http://ieeexplore.ieee.org/stamp/stamp.jsp?tp=&arnumber=864750
16) Paper: Key challenges and results of VCSELs in data links
    a. 1996
    b. "Lasers and Electro-Optics Society Annual Meeting, 1996. LEOS 96., IEEE Volume: 2 Digital Object Identifier: 10.1109/LEOS.1996.571604 Publication Year: 1996 , Page(s): 167 - 168 vol.2"
    c. http://ieeexplore.ieee.org/stamp/stamp.jsp?tp=&arnumber=571604
17) Paper: A low-cost high-performance optical interconnect
    a. 1996
    b. "Components, Packaging, and Manufacturing Technology, Part B: Advanced Packaging, IEEE Transactions on Volume: 19 , Issue: 3 Digital Object Identifier: 10.1109/96.533892 Publication Year: 1996 , Page(s): 532- 539"
    c. http://ieeexplore.ieee.org/stamp/stamp.jsp?tp=&arnumber=533892
18) Paper: Characteristics of VCSEL arrays for parallel optical interconnects
    a. 1996
    b. "Electronic Components and Technology Conference, 1996. Proceedings., 46th Digital Object Identifier: 10.1109/ECTC.1996.517404 Publication Year: 1996 , Page(s): 279 - 291"
    c. http://ieeexplore.ieee.org/stamp/stamp.jsp?tp=&arnumber=517404
19) Paper: Use of VCSEL arrays for parallel optical interconnects
    a. 10th Apr 1996
    b. Proc. SPIE 2683, Fabrication, Testing, and Reliability of Semiconductor Lasers, 81 (April 10, 1996); doi:10.1117/12.237679
    c. http://proceedings.spiedigitallibrary.org/proceeding.aspx?articleid=1015866
20) Paper: A low-cost high-performance optical interconnect
    a. Aug 1996
    b. The Optobus™ link is a ten channel parallel bidirectional data link based on multimode fiber ribbons. The guiding principal of the Optobus™ design was to produce an optical interconnect capable of competing with copper on price, not just performance. Recognizing that packaging dominates the cost of optical interconnects, the design focused on minimizing the complexity of the optical subassembly. A key component of this strategy is the use of AlGaAs/GaAs vertical cavity surface emitting lasers (VCSELs). Another is designing the silicon receiver and transmitter arrays around the module level packaging parasitics. The resulting parallel transceiver modules achieve a minimum throughput of 1.5 Gb/s in each direction with a power dissipation of 1.6 W

Professor (Dr. Dr.) Michael S. Lebby, B. Eng. (Hons), MBA, Ph.D., D. Eng, Fellow NAI, IEEE, OSA; C. Eng.
1 Hawthorne St., unit 25a, San Francisco, CA 94105, USA; mobile +1 717 839 7078; drmlebby@gmail.com

   c. Components, Packaging, and Manufacturing Technology, Part B: Advanced Packaging, IEEE Transactions on Volume: 19 , Issue: 3 Page(s): 532- 539
   d. http://ieeexplore.ieee.org/xpl/articleDetails.jsp?arnumber=533892
21) Invited talk and abstract: Ridge Waveguide and Planar VCSEL Device Reliability
   a. Sep 1996
   b. European Laser Workshop, Olso, Norway
22) Invited talk and abstract: Vertical cavity surface emitting lasers for communication applications
   a. Oct 1996
   b. Optical Society of America (OSA) Annual meetings, proceedings, paper WR1, Rochester, NY
23) Paper: Characteristics of VCSELs and VCSEL arrays for Optical Data Links
   a. 10th Dec 1996
   b. Motorola: Technical Enrichment Matrix Conference, Motorola SPS- SABA, Hilton Pavilion, Mesa, Az

1997

24) Paper: Effect of proton implantation on the degradation of GaAs/AlGaAs vertical cavity surface emitting lasers
   a. 1997
   b. Electronics Letters, ISSN 0013-5194, 1997, Volume 33, Issue 2, p. 137
   c. http://ieeexplore.ieee.org/xpl/articleDetails.jsp?arnumber=579434
25) Paper (invited): Laser safety issues with VCSEL arrays in OPTOBUS(tm)
   a. 1997
   b. Optical Society of America (OSA); Annual Meeting, Micro-optics session
26) Paper: Relative intensity noise of 780nm vertical cavity surface emitting lasers Jan 1997
   a. Proceedings of the 1997 Pacific Rim Conference on Lasers and Electro-Optics, CLEO/Pacific Rim, No 46984, Jan 1997
   b. http://ieeexplore.ieee.org/stamp/stamp.jsp?tp=&arnumber=610586
27) Paper: Characteristics of VCSELs and VCSEL arrays for optical data links
   a. Feb 1997
   b. Proc. SPIE 3004, Fabrication, Testing, and Reliability of Semiconductor Lasers II, 122 (May 1, 1997); doi:10.1117/12.273825
   c. http://proceedings.spiedigitallibrary.org/proceeding.aspx?articleid=918720
28) Paper: Parallel interconnect for a novel system approach to short distance high information transfer data links
   a. April 1997

Professor (Dr. Dr.) Michael S. Lebby, B. Eng. (Hons), MBA, Ph.D., D. Eng, Fellow NAI, IEEE, OSA; C. Eng.
1 Hawthorne St., unit 25a, San Francisco, CA 94105, USA; mobile +1 717 839 7078; drmlebby@gmail.com

b. Proceedings of SPIE, ISSN 0277-786X, 04/1997, Volume 3038, Issue 1
c. http://www.deepdyve.com/lp/spie/parallel-interconnect-for-a-novel-system-approach-to-short-distance-RFreDaEJjb

29) Paper: Vertical cavity surface emitting laser packaging with auto power control
a. May 1997
b. Proceedings, 47th Electronic Components and Technology Conference, pp. 368-370, May 1007
c. http://www.researchgate.net/publication/3700010_Vertical_cavity_surface_emitting_laser_packaging_with_auto_powercontrol

30) Course (peer reviewed): "Optoelectronic devices and packaging"
a. May 1997
b. IEEE ECTC
c. http://www.ectc.net

31) Paper: Vertical cavity surface emitting laser packaging with auto power control
a. 18th May 1997
b. Electronic Components and Technology Conference, 1997. Proceedings., 47th
c. http://ieeexplore.ieee.org/xpl/articleDetails.jsp?tp=&arnumber=606195&contentType=Conference+Publications&sortType%3Dasc_p_Sequence%26filter%3DAND(p_IS_Number%3A13278)

32) Invited Talk and Abstract: VCSEL/detector technology for parallel optical interconnects
a. 17th Jun 1997
b. International Workshop for new technologies, interconnects, and communications in distributed and parallel systems by IRIT, ONERA, CERT, CNRS, and LAAS (France)

33) Invited talk and abstract: Vertical cavity surface emitting lasers and applications
a. Sep 1997
b. European Laser Workshop, Glasgow, Scotland

1998

34) Course and Tutorial: Optoelectronic Devices and Packaging: VCSEL Technology
a. Jan 1998
b. "Optoelectronic devices and packaging have found increasing use in many new products over the last 20 Yrs. This tutorial primarily will focus on semiconductor laser based technology with particular emphasis on emerging new technologies such as the Vertical Cavity Surface Emitting Laser (VCSEL) and how to take advantage of itâ€™s uniqueness in packaging. The tutorial will look at the driving factors required for low cost high volume VCSEL based packages and what impact they will have in tomorrows products. As there are many packaging

Professor (Dr. Dr.) Michael S. Lebby, B. Eng. (Hons), MBA, Ph.D., D. Eng, Fellow NAI, IEEE, OSA; C. Eng.
1 Hawthorne St., unit 25a, San Francisco, CA 94105, USA; mobile +1 717 839 7078; drmlebby@gmail.com

solutions for VCSEL based technology proposed, the course will show the relative merits of popular new technologies with respect to high volume and low cost manufacturing.

c. 4th IEEE Workshop on AST Phoenix Research Center
d. http://www.ewh.ieee.org/soc/cpmt/ast98/lebby-01.ppt

35) Paper: ORMOCERs - new photo-patternable dielectric and optical materials for MCM-packaging
   a. Jan 1998
   b. Hybrid inorganic-organic polymers (ORMOCERs*) have been developed and tested in an ongoing EU-program (BE 7250 DONDOMCM) for evaluation in MCM applications. The photopattemable materials with negative resist behavior are composed o f inorganic oxidic structures cross-linked or substituted by organic groups. They are prepared from organosilane precursors by sol-gel-processing in combination with organic crosslinking of polymerizable organic functions. As a result of these functionalities the properties of the ORMOCERs can be adjusted to particular applications. Systematic variation of composition combined with adaptation to micro system technology allows great flexibility in processing. Some features of these materials are: Postbaking at moderate temperatures (120 "C - 180 "C) enables processing on substrates such as FR-4 and BT. Combined use as dielectric and passivation layers in electrical systems and devices as well as core and cladding for optical applications enables e/o applications with high integration levels. Easily adaptable to thin film technology: spin-on with planarization >90% and via diameters down to 20 pm have been achieved
   c. Proceedings of the 1998 48th Electronic Components and Technology Conference
   d. http://ieeexplore.ieee.org/xpl/articleDetails.jsp?reload=true&arnumber=678838&contentType=Conference+Publications

36) Paper and Invited talk: VCSEL Devices and Packaging for Fiber Optic Transceivers
   a. 30th Mar 1998
   b. OSA Technical Digest: Integrated Photonics Research (IPR) 1998 paper: IWD1
   c. http://www.opticsinfobase.org/abstract.cfm?URI=IPR-1998-IWD1

37) Paper: Automatic power control of a VCSEL using an angled lid TO56 package
   a. May1998
   b. 1998 Proceedings. 48th Electronic Components and Technology Conference
   c. http://ieeexplore.ieee.org/xpl/login.jsp?tp=&arnumber=678694&url=http%3A%2F%2Fieeexplore.ieee.org%2Fiel4%2F5582%2F14953%2F00678694.pdf%3Farnumber%3D678694

38) Paper: O/e-MCM packaging with new, patternable dielectric and optical materials
   a. May 1998
   b. Electronic Components & Technology Conference, 1998. 48th IEEE
   c. http://ieeexplore.ieee.org/xpl/login.jsp?tp=&arnumber=678929&url=http%3A%2F%2Fieeexplore.ieee.org%2Fiel4%2F5582%2F14953%2F00678929.pdf%3Farnumber%3D678929

Professor (Dr. Dr.) Michael S. Lebby, B. Eng. (Hons), MBA, Ph.D., D. Eng, Fellow NAI, IEEE, OSA; C. Eng.
1 Hawthorne St., unit 25a, San Francisco, CA 94105, USA; mobile +1 717 839 7078; drmlebby@gmail.com

39) Paper: ORMOCERs(TM)-new photo-patternable dielectric and optical materials for MCM-packaging
    a. May 1998
    b. Hybrid inorganic-organic polymers (ORMOCERs*) have been developed and tested in an ongoing EU-program (BE 7250 DONDOMCM) for evaluation in MCM applications. The photo-pattemable materials with negative resist behavior are composed of inorganic oxidic structures cross-linked or substituted by organic groups. They are prepared from organosilane precursors by sol-gel-processing in combination with organic crosslinking of polymerizable organic functions. As a result of these functionalities the properties of the ORMOCERs can be adjusted to particular applications. Systematic variation of composition combined with adaptation to micro system technology allows great flexibility in processing. Some features of these materials are: Post baking at moderate temperatures (120 "C - 180 "C) enables processing on substrates such as FR-4 and BT. Combined use as dielectric and passivation layers in electrical systems and devices as well as core and cladding for optical applications enables e/o applications with high integration levels. Easily adaptable to thin film technology: spin-on with planarization >90% and via diameters down to 20 pm have been achieved
    c. 1998 Proceeedings. 48th Electronic Components and Technology Conference
    d. http://ieeexplore.ieee.org/xpl/articleDetails.jsp?reload=true&arnumber=678838&contentType=Conference+Publications
40) Course (peer reviewed): "Optoelectronic devices and packaging: VCSEL technology"
    a. May 1998
    b. IEEE ECTC
    c. http://www.ectc.net
41) Co-Chairman Optoelectronics session, 48th ECTC Conference
    a. 25th May 1998
    b. Co-chairman Optoelectronics session, 48th ECTC Conference Seattle, Washington
    c. ECTC, IEEE-CPMT, EIA/ECA
    d. http://www.ectc.net
42) Invited Presentation and Abstract: VCSEL Technology - VCSEL technology is discussed with the work between AMP and MODE (division of EMCORE) fiber optics.
    a. Sep 1998
    b. ECOC European Laser Workshop (in association with ECOC 1998, Madrid, Spain
    c. https://openlibrary.org/books/OL22322573M/ECOC_'98_24th_European_Conference_on_Optical_Communication
    d.
43) Paper: Optical bistability in vertical cavity surface emitting lasers with a simple intra-cavity epitaxial absorber layer
    a. 4th Oct 1998

Professor (Dr. Dr.) Michael S. Lebby, B. Eng. (Hons), MBA, Ph.D., D. Eng, Fellow NAI, IEEE, OSA; C. Eng.
1 Hawthorne St., unit 25a, San Francisco, CA 94105, USA; mobile +1 717 839 7078; drmlebby@gmail.com

   b. Conference Digest: Semiconductor Laser Conference, 1998. ISLC 1998 NARA. 1998 IEEE 16th International

44) Talk: Optical bistability in vertical cavity surface emitting lasers with a simple intra-cavity epitaxial absorber layer
   a. 4th Oct 1998
   b. Conference Digest: Semiconductor Laser Conference, 1998. ISLC 1998 NARA. 1998 IEEE 16th International
   c.

45) Paper: Vertical cavity surface emitting laser-based parallel optical data link
   a. Dec 1998
   b. Optical Engineering, vol 37, no. 12, pp.3113-18, Dec. 1998.
   c. http://spie.org/x648.html?product_id=318648

46) Paper: VCSEL devices and packaging
   a. Dec 1998
   b. Proceedings of SPIE, ISSN 0277-786X, 05/2003, Volume 3289, Issue 1
   c. http://proceedings.spiedigitallibrary.org/proceeding.aspx?articleid=935769

1999

47) Paper and Interviewed Article: Commercial VCSEL Manufacturing
   a. Apr 1999
   b. Compound Semiconductor

48) Course (peer reviewed): "Optoelectronic devices and packaging: VCSEL and edge emitter technology"
   a. May 1999
   b. IEEE Electronics and components technology conference; San Diego, California
   c. http://www.ectc.net

2000

49) Invited Panel Session: Opto Electronic Integrated Circuits - More IC than OE?
   a. 5th Mar 2000
   b. "The panel session focused on optical integration for communications. Other panel members included Brendan Hyland CEO of Kymata amongst others.

Professor (Dr. Dr.) Michael S. Lebby, B. Eng. (Hons), MBA, Ph.D., D. Eng, Fellow NAI, IEEE, OSA; C. Eng.
1 Hawthorne St., unit 25a, San Francisco, CA 94105, USA; mobile +1 717 839 7078; drmlebby@gmail.com

c. OSA Executive Forum: Photonics and Telecommunications: the tidal wave of the new millennium
d. http://www.laserfocusworld.com/articles/2000/02/osa-executive-forum-at-ofc-2000.html

50) Course: Optoelectronics Components and Modules for Datacom and Telecom
a. May 2000
b. Optoelectronics components and modules for the Telecommunication industry and Datacom Networks are rapidly advancing in terms of speed, lower cost and design. The main objectives of this course are to review the current and future trends for active devices and packaging technology for discrete components and data network modules. The course will cover in detail the fundamental active III-V devices and components used today and review current trends in both III-V device technology and packaging for telecom and datacom applications.
c. Proceedings 50th Electronics Components and Technology Conference May 2000
d. http://www.thierry-lequeu.fr/data/Ectc/ECTC2000/ECTC2000.pdf

51) Invited Presentation and Abstract: An investor's perspective on optical interconnects
a. 24th May 2000
b. The talk discusses the investor's perspective on optical interconnects from Intel Capital.
c. IEEE: Workshop on interconnections within high=speed digital systesm
d. http://www.oi-ieee.org/

52) Invited Presentation: Optoelectronic Integration for Metro DWDM: Intel's perspective...
a. 3rd Sep 2000
b. As part of the ECOC conference in Munich Germany, this workshop invited 9 speakers to discuss the future of optical networking in metropolitan environments.
c. Electronicast Europe
d. http://www.electronicastconsultants.com

53) Keynote Presentation: Optoelectronics Integration for Metro DWDM, Intel's Perspective
a. 9th Oct 2000
b. Electronicast Corporations: Optical communications start-up and emerging companies conference
c. http://www.electronicastconsultants.com

54) Panel Session: Semiconductors to Optics
a. 6th Nov 2000
b. Representing Intel at the conference, the panel explored the reasons why Intel was investing into photonics, optics, and fiber optic communications. Panel moderator was Drew Lanza, VC Morgenthaler.
c. JP Morgan communications components conference: the convergence of optical components and communications ICs
d. http://www.thefreelibrary.com/Endwave+Founder+and+EVP+To+Speak+at+JP+Morgan+Communications...-a067529552

Professor (Dr. Dr.) Michael S. Lebby, B. Eng. (Hons), MBA, Ph.D., D. Eng, Fellow NAI, IEEE, OSA; C. Eng.
1 Hawthorne St., unit 25a, San Francisco, CA 94105, USA; mobile +1 717 839 7078; drmlebby@gmail.com

2001

55) Paper: Optical components and their role in optical networks
    a. 2001
    b. Electronic Components and Technology Conference, 2001. Proceedings., 51st
    c. http://ieeexplore.ieee.org/xpl/login.jsp?tp=&arnumber=927765&url=http%3A%2F%2Fieeexplore.ieee.org%2Fxpls%2Fabs_all.jsp%3Farnumber%3D927765
56) Invited Presentation: "Starting a company and hitting the ground running"
    a. 7th Feb 2001
    b. Storm Ventures limited partner meeting
    c. http://www.stormventures.com
57) Keynote Talk: Industry 'Optomism'
    a. 30th Apr 2001
    b. Electronicast; Fiber Optics for the next decade conference; 13th Annual Monterey conference http://www.electronicastconsultants.com
58) Keynote Talk: Next decade in fiber optic communications
    a. 1st May 2001
    b. Electronicast: 13th Annual Fiber Optics for the Next Decade Conference
    c. http://www.photonics.com/Article.aspx?AID=8916
59) Panel session: Next decade in fiber optic communications
    a. 2nd May 2001
    b. Electroicast: 13th Annual Fiber Optics for the Next Decade Conference
    c. http://www.photonics.com/Article.aspx?AID=8916
60) Paper: OEICs: commercialization at last
    a. Jul 2001
    b. Compound Semiconductor, vol. 7. no. 6, pp. 81-2, 85, July 2001
    c. http://www.compoundsemiconductor.net/csc/features-details.php?cat=features&id=11719

2002

61) Book chapter: "Optical sources: Light-emitting diodes and laser technology"
    a. Published 2002
    b. "The Handbook includes chapters on all the major industry standards, quick reference tables, helpful appendices, plus a new glossary and list of acronyms. This practical handbook can stand alone or as a companion volume to DeCusatis:

Professor (Dr. Dr.) Michael S. Lebby, B. Eng. (Hons), MBA, Ph.D., D. Eng, Fellow NAI, IEEE, OSA; C. Eng.
1 Hawthorne St., unit 25a, San Francisco, CA 94105, USA; mobile +1 717 839 7078; drmlebby@gmail.com

Fiber Optic Data Communication: Technological Advances and Trends (February 2002, ISBN: 0-12-207892-6), which was developed in tandem with this book.

c. Academic Press (1998, 2002); ISBN: 0-12-207892-6; Handbook of Fiber Optic Data Communication By Casimer DeCusatis
d. http://books.google.com/books?id=Rlb61Kknl8IC&printsec=frontcover&source=gbs_ge_summary_r&cad=0#v=onepage&q&f=false

62) Book chapter: "Semiconductor laser and light emitting diode fabrication"
    a. Published 2002
    b. "The Handbook includes chapters on all the major industry standards, quick reference tables, helpful appendices, plus a new glossary and list of acronyms. This practical handbook can stand alone or as a companion volume to DeCusatis: Fiber Optic Data Communication: Technological Advances and Trends (February 2002, ISBN: 0-12-207892-6), which was developed in tandem with this book.
    c. Academic Press: Editor DeCusatis: Fiber Optic Data Communication: Technological Advances and Trends (February 2002, ISBN: 0-12-207892-6)
    d. http://books.google.com/books?id=Rlb61Kknl8IC&lpg=PP1&pg=PP1#v=onepage&q&f=false
63) Keynote speech: "Business and Technical Perspectives for Optical Networking
    a. 14th Jul 2002
    b. PhoPack 2002 Stanford University
    c. http://www.accessmylibrary.com/coms2/summary_0286-25792277_ITMhttp://books.google.com/books/about/LEOS_88.html?id=LUS0cQAACAAJ
64) Interview Optcon (Japan), "Ignis Optics: Small is beautiful"
    a. 15th Aug 2002
    b. Overview of Ignis Optics strategy for fiber optic transceivers with innovative optoelectronic devices and packaging (in Japanese).
    c. Optcon volume 8, no 161, pp50-51
    d. http://magissuelist.nichigai.co.jp/detail?id=000000098732
65) Panel Session: An adventure into venture capital - lessons from silicon valley
    a. 12th Sep 2002
    b. Evening forum discussion chaired by Professor Richard Harrison, Chair, with panel members Pitch Johnson (VC), Brendan Hyland (Nutrior Ventures), Jane Karwoski (All-hotels Ltd), and Colin Rutherford (Intelli Partners). Sponsored by Scottish Development International, University of Edinburgh, British Council
66) Invited Paper: Elegant cost-effective optical subsystems for next generation optical networks
    a. 13th Nov 2002
    b. Electronicast: 4th Annual OADM and advanced photonics communication networks conference - market and technology trends, San Mateo, California
    c. http://www.electronicastconsultants.com/

Professor (Dr. Dr.) Michael S. Lebby, B. Eng. (Hons), MBA, Ph.D., D. Eng, Fellow NAI, IEEE, OSA; C. Eng.
1 Hawthorne St., unit 25a, San Francisco, CA 94105, USA; mobile +1 717 839 7078; drmlebby@gmail.com

2004

67) Invited Paper (extended abstract) and Presentation: Automated commercial fabrication of wideband tunable lasers using ultra-high resolution e-beam lithography
    a. 27th Oct 2004
    b. IoP/CS-MAX extended abstract at the Compound Semiconductor Manufacturing Expo, Monterey, California, pp92-94 in the technical digest.
    c. http://www.compoundsemiconductor.net

2005

68) Book: Optoelectronic Markets 2005
    a. Jun 2005
    b. Comprehensive market report and forecast of current optoelectronics markets, needs, technologies, and applications. This report forecasts the current state and direction of the optoelectronics industry.
    c. OIDA
    d. http://www.oida.org/home/publications/oida-publication-report-library/
69) Cover story/Interview: Does a foundry model add up for InP optoelectronics
    a. Jul 2005
    b. Interview with Michael Hatcher from Compound Semiconductor magazine. Volume 11, Number 7, August 2005 pp 17-19
    c. Compound Semiconductor: Three-fives and silicon heterostructures
    d. http://www.compoundsemiconductor.net
70) Short Article: President's Letter to OIDA Membership
    a. Nov 2005
    b. OIDA Newsletter, quarterly from 2005-2009
    c. http://www.wsr-ods.com/files/oidanews_0408.pdf
71) Invited talk: Worldwide Optoelectronic Trends and Economic Opportunities.
    a. 18th Nov 2005
    b. UNCC 4th Annual symposium: UNC Charlotte Center for Optoelectronics and Optical Communications
    c. http://opticscenter.uncc.edu/node/275

2006

Professor (Dr. Dr.) Michael S. Lebby, B. Eng. (Hons), MBA, Ph.D., D. Eng, Fellow NAI, IEEE, OSA; C. Eng.
1 Hawthorne St., unit 25a, San Francisco, CA 94105, USA; mobile +1 717 839 7078; drmlebby@gmail.com

72) Workshop: 100 Gb Ethernet: The Next Challenge for Communications Systems
    a. 1st Oct 2006
    b. Workshop chairman and editor of the report: Abstract: The communications market is continuously evolving to provide better and cheaper services. These changes have led to the movement away from the traditional voice-switched networks to more data-centric packet networks. This report seeks to examine the next generation of Ethernet devices as we strain the technology limits at 100 Gb/s? How will datacom and telecom networks differ in their approaches? OIDA http://www.oida.org/home/publications/oida_publication_report_library/100_gb_ethernet_the_next_challenge_for_communi_(1)/
    c.
73) Workshop: The Challenge for Indium Phosphide Photonic Development and the Optical Foundry
    a. 2006
    b. "Workshop chairman and editor of the report.
    c. Abstract: Indium Phosphide, InP, is a semiconductor material with properties that make it particularly suitable for optoelectronic devices. Optical communications requirements drove its initial development. Recently, the applications for InP semiconductor devices have broadened to include high-speed electronics and optical sensors. This report examines the current state of the InP device market and its future direction. Addresses challenges for a pure foundry play and the role for InP devices. Seeks to find the best ways to address the needs for InP device development in the U.S."
    d. OIDA
    e. http://www.oida.org/home/publications/oida_publication_report_library/the_challenge_for_indium_phosphide_photonic_develo/
74) Workshop: Nitride LED and Laser Technology and Its Impact on the Display, Medical, and Storage Industries
    a. 2006
    b. Workshop chairman and editor of the report:
    c. Abstract: Since the development of p-type material in 1989, research in nitride emitter technology has developed rapidly over the last 15 years. This material system provided a new range of color applications that could be better utilized and with far better reliability than the II-VI material system. This report examines material systems and developments for short wavelength (green-ultraviolet) lasers and LEDs with techniques such as color-mixing and phosphor conversion.
    d. OIDA
    e. http://www.oida.org/home/publications/oida_publication_report_library/nitride_led_and_laser_technology_and_its_impact_on/
    f.

Professor (Dr. Dr.) Michael S. Lebby, B. Eng. (Hons), MBA, Ph.D., D. Eng, Fellow NAI, IEEE, OSA; C. Eng.
1 Hawthorne St., unit 25a, San Francisco, CA 94105, USA; mobile +1 717 839 7078; drmlebby@gmail.com

75) Invited Article: A New Model for the Optoelectronic Indium-based Semiconductor Industry
    a. May 2006
    b. OSA: Optics and Photonics News
    c. http://www.osa-opn.org/Content/ViewFile.aspx?id=10456
76) Book: Worldwide Optoelectronics Markets and Trends 2006
    a. Jun 2006
    b. Comprehensive market report and forecast of current optoelectronics markets, needs, technologies, and applications. This report forecasts the current state and direction of the optoelectronics industry.
    c. OIDA, 431 pages
    d. http://www.oida.org/home/publications/oida_publication_report_library/2006_global_optoelectronics_industry_market_report/
77) Workshop: High Power Diode Laser Sources and Their Impact on Industrial, Medical, and Military Laser Industries
    a. 1st Jul 2006
    b. Workshop chairman and editor of the report:
    c. Abstract: High power semiconductor laser diodes are used in several different market segments today. The technology continues to advance and improvements in efficiency and power are reported each year. Semiconductor laser diodes are used either directly or indirectly to enable new applications or as a replacement for older technology approaches. This report examines practical implementations and limitations for lasers in the 100 W to 100 kW range and roadmaps and developments anticipated over the next five years.
    d. OIDA
    e. http://www.oida.org/home/publications/oida_publication_report_library/high_power_diode_laser_sources_and_their_impact_on/
78) Workshop: Biophotonic Sensors and Smart Fiber Optic Sensor Networks
    a. 1st Aug 2006
    b. Workshop chairman and editor of the report:
    c. Abstract: This roadmap report examines biophotonic sensor opportunities from many perspectives including; government, industrial, university and venture capital. The markets, technologies, commercialization, and roadmap trends are presented in addition to promising areas for R & D.
    d. OIDA
    e. http://www.oida.org/home/publications/oida_publication_report_library/biophotonic_sensors_and_smart_fiber_optic_sensor_n/
79) Workshop: Wide Area Surveillance
    a. 1st Oct 2006
    b. Workshop chairman and editor of the report:
    c. Abstract: This report examines wide area surveillance of pipelines and other strategic infrastructure as it is rapidly becoming an important issue on a worldwide basis. The increasing need for surveillance for both homeland security

Professor (Dr. Dr.) Michael S. Lebby, B. Eng. (Hons), MBA, Ph.D., D. Eng, Fellow NAI, IEEE, OSA; C. Eng.
1 Hawthorne St., unit 25a, San Francisco, CA 94105, USA; mobile +1 717 839 7078; drmlebby@gmail.com

as well as defense applications should make this commercially attractive to both the defense as well as to commercial industry. (Report is 62 pages followed by hard copies of presentations from the forum.)

d. OIDA
e. http://www.oida.org/home/publications/oida_publication_report_library/wide_area_surveillance/

80) Invited Talk: OIDA optoelectronics markets, technology and opportunities for optofluidics
   a. 20th Oct 2006
   b. Organized by the DARPA center for optofluidics: translational research and commercialization workshop.
   c. DARPA Optofluidics industry forum, UCSD San Diego, CA
   d. http://www.biophot.caltech.edu/optofluidics/

81) Invited talk: Global optoelectronics technology roadmaps and trends
   a. 27th Oct 2006
   b. UNCC 5th Annual Symposium: UNC Charlotte Center for Optoelectronics and Optical Communications
   c. http://opticscenter.uncc.edu/node/268

82) Workshop: Artificial vision systems
   a. 1st Dec 2006
   b. Workshop chairman and editor of the report:
   c. Abstract: The ability to identify objects of interest and emerging threats around a vehicle in real time or by a warfighter looking for threats in a large field of view is currently severely hampered by the limitations of current algorithms and processing platforms. There have been recent advances in several technology areas, which if combined intelligently could solve this hard problem in enhancing situational awareness cost effectively. This report looks at the issues surrounding automated surveillance systems specifically looking at enhanced binoculars and convoy vehicle automated protection systems.
   d. OIDA
   e. http://www.oida.org/home/publications/oida_publication_report_library/artificial_vision_systems/

83) Keynote address: Global perspectives in optoelectronics and photonics
   a. 6th Dec 2006
   b. Photonics 21: European Union's 7th Framework Program Key Photonics Platform
   c. http://www.photonics21.org/downloads/download_presentations.php

2007

Professor (Dr. Dr.) Michael S. Lebby, B. Eng. (Hons), MBA, Ph.D., D. Eng, Fellow NAI, IEEE, OSA; C. Eng.
1 Hawthorne St., unit 25a, San Francisco, CA 94105, USA; mobile +1 717 839 7078; drmlebby@gmail.com

84) Workshop: Micropackaging for the Next Generation of Optical and Electrical Components
    a. 2007
    b. Workshop chairman and editor of the report:
    c. Abstract: Optical components are ubiquitous. Applications that use them include DVD players, audio devices, cell phones, re-writable drives, projection displays, and communication devices. This report concentrates on the role of micropackaging for the for next generation fiber optic components with an eye towards lower cost and higher volume.
    d. OIDA
    e. http://www.oida.org/home/publications/oida_publication_report_library/micropackaging_for_the_next_generation_of_optical/
85) Workshop: Silicon Photonics: Challenges and Future, 2007
    a. 2007
    b. Workshop chairman and editor of the report:
    c. Abstract: Copper interconnects are currently used extensively within the data center environment. Fiber optic technology is used as a connectivity solution when higher performance is required and the cost differential compared to a copper solution is affordable. Fiber optic technology offers several key advantages over copper solutions for data transmission. This report looks at silicon photonics as a potential optical interconnect solution and addresses the issues and technology paths being pursued.
    d. OIDA
    e. http://www.oida.org/home/publications/oida_publication_report_library/silicon_photonics_challenges_and_future,_2007/
86) Workshop: Photonic Sensors Roadmapping Report, 2007
    a. 2007
    b. Workshop chairman and editor of the report:
    c. Abstract: This OIDA workshop report examines application specific sensor needs for both the government and the private sector with an emphasis on the oil and gas market, sensing function integration, cost reduction opportunities, and barriers and competing technologies.
    d. OIDA
    e. http://www.oida.org/home/publications/oida_publication_report_library/photonic_sensors_roadmapping_report,_2007/
87) Paper: Fiber optic sensing technology: emerging markets and trends
    a. 2007
    b. Third European Workshop on Optical Fibre Sensors.
    c. Edited by Cutolo, Antonello; Culshaw, Brian; Lopez-Higuera, Joshua Miguel.
    d. Proceedings of the SPIE, Volume 6619, pp. 661902 (2007). (SPIE Homepage)
    e. http://adsabs.harvard.edu/abs/2007SPIE.6619E...2H
88) Article: "Optoelectronics Technology: New and Exciting Markets in Consumer and Entertainment"

Professor (Dr. Dr.) Michael S. Lebby, B. Eng. (Hons), MBA, Ph.D., D. Eng, Fellow NAI, IEEE, OSA; C. Eng.
1 Hawthorne St., unit 25a, San Francisco, CA 94105, USA; mobile +1 717 839 7078; drmlebby@gmail.com

a. 10th Jan 2007
b. "The total optoelectronics components and enabled products grew 20% in 2005 to $364 billion, from $304 billion in 2004. Components grew 17% in 2005 to $104 billion, from $89 billion in 2004. When flat panel displays are excluded as components, components grew 10% in 2005 to $30 billion, from $27 billion in the previous year. Enabled products grew 21% to $260 billion in 2005, from $215 billion in 2004.
c. IEEE CPMT Santa Clara
d. http://www.cpmt.org/scv/meetings/cpmt0701.html

89) Abstract and conference invited talk: The case for a photonics foundry in USA
a. 27th April 2007
b. European Conference on Integrated Optics (2007): Towards foundries for photonic ICs
c. http://www.epixnet.org/index.php?id=393

90) Paper: Optoelectronics Roadmap OIDA-iNEMI
a. May 2007
b. IEEE Packaging and Assembly

91) Workshop: 100 Gbit Interconnects and Above: The Need for Speed
a. 1st May 2007
b. Workshop chairman and editor of the report:
c. Abstract: The electronic society we live in today is seeing increased demand for data transfer, internet downloads, online applications, video sharing and storage. The electronic world of banks, companies, universities and governments require large secure datacenters connected to secure networks. This continuously drives for the development of more powerful servers and computer systems. This report examines needs and motivations for optical interconnect implementation. Looks at the applications, history, market drivers, and future issues that affect this crossover.
d. OIDA
e. http://www.oida.org/home/publications/oida_publication_report_library/100_gb_ethernet_the_next_challenge_for_communicati/

92) Book: 2007 Global Optoelectronics Industry Market Report and Forecast
a. Jun 2007
b. Comprehensive market report and forecast of current optoelectronics markets, needs, technologies, and applications. This report forecasts the current state and direction of the optoelectronics industry.
c. OIDA, 517 pages
d. http://www.oida.org/home/publications/oida_publication_report_library/2007_global_optoelectronics_industry_market_report/

93) Paper: Growing at light speed
a. The article discusses the significance of optoelectronics in high technology manufacturing industries. Optoelectronics components are being used in the manufacturing cameras of mobile phones, plasma display panel TVs and LCD

Professor (Dr. Dr.) Michael S. Lebby, B. Eng. (Hons), MBA, Ph.D., D. Eng, Fellow NAI, IEEE, OSA; C. Eng.
1 Hawthorne St., unit 25a, San Francisco, CA 94105, USA; mobile +1 717 839 7078; drmlebby@gmail.com

TVs, among others. Since its application allows product differentiation and innovation, it has spurred growth in segments such as the consumer/entertainment, computer and communications industries. The article also discusses the differences in the material and processing equipment such as silicon photonics.

b. Sep 2007
c. IEEE Circuits Assembly; Sep 2007, Vol. 18 Issue 9, p44
d. http://www.thefreelibrary.com/Growing+at+light+speed%3a+after+a+false+start%2c+OE+is+fast+becoming+a...-a0168812805

94) Keynote/special invited talk: "10 Grand Challenges in Photonics"
   a. 31st Oct 2007
   b. Sixth annual symposium UNCC Optoelectronics Center
   c. http://opticscenter.uncc.edu/node/265

2008

95) Workshop: Perspectives on the Optoelectronics Industry: Manufacturing in the 21st Century, 2008
   a. 2008
   b. Workshop chairman and editor of the report:
   c. Abstract: This report provides insight and perspectives by senior-level representatives from industry on global trade and manufacturing practices in the field of optoelectronics. Three areas examined are: 1) Can automation or optical integration relieve the momentum to outsource and off-shore manufacturing from North America? 2) The supply chain and the economics of manufacturing in the U.S., Europe, and Asia, and 30 The implications of offshore manufacturing on both the U.S. defense and commercial market sectors within the different fields of optoelectronics.
   d. OIDA
   e. http://www.oida.org/home/publications/oida_publication_report_library/perspectives_on_the_optoelectronics_industry_manuf/

96) Workshop: Perspectives on the Optoelectronics Industry: Innovation, 2008
   a. 2008
   b. Workshop chairman and editor of the report: Abstract: This report documents some of the issues raised at the Optoelectronics Industry Development Association (OIDA) forum and provides a review on the critical issue of innovation in the U.S. and the impact it has on future American competitiveness and technology leadership. This report looks at innovation and R&D from many perspectives: global, business. university, government funding agencies.

Professor (Dr. Dr.) Michael S. Lebby, B. Eng. (Hons), MBA, Ph.D., D. Eng, Fellow NAI, IEEE, OSA; C. Eng.
1 Hawthorne St., unit 25a, San Francisco, CA 94105, USA; mobile +1 717 839 7078; drmlebby@gmail.com

c. OIDA
d. http://www.oida.org/home/publications/oida_publication_report_library/perspectives_on_the_optoelectronics_industry_innov/

97) Workshop: Perspectives on the Optoelectronics Industry, 2008
a. 2008
b. Workshop chairman and editor of the report:
c. Abstract: The United States is falling behind in the manufacturing, packaging, and assembling of optoelectronics products. Innovating technology may also be imperiled. This report is the result of the first of three optoelectronic forums sponsored by the Defense Advanced Research Projects Agency (DARPA), This report details the trends, findings, and directions for optoelectronics in each of these market applications. Included in the first chapter of this report is the global optoelectronics summary that was compiled by OIDA in 2007.
d. OIDA
e. http://www.oida.org/home/publications/oida_publication_report_library/perspectives_on_the_optoelectronics_industry,_2008/

98) Workshop: Future Optical Communication Systems, 2008
a. 2008
b. Workshop chairman and editor of the report:
c. Abstract: This report examines future optical communication needs and technologies. Topics include: Networks, Core, Metro, and Access Technology, photonic integration, and markets.
d. OIDA
e. http://www.oida.org/home/publications/oida_publication_report_library/future_optical_communication_systems,_2008/

99) Book chapter: Being an Intrapreneur and Entrepreneur in the Optoelectronics Industry
a. 2008
b. This book provides actual entrepreneurial stories giving insight into the pitfalls and successes one might find in starting or even continuing with a small high-tech business. Insights into innovative, speculative, and (largely) successful new ventures, as experienced by those who went through the process, are complemented by comments and observations from others in the field including researchers, economists, investors, regional development agencies, technology transfer organizations, and universities. The book is recommended to entrepreneurs in all high technology disciplines and in particular for students and early career professionals. It can be also useful for undergraduate and postgraduate courses in entrepreneurship, which many institutions are currently introducing, and to those who are interested in how a high-tech business might develop.
c. SPIE: Engineering a High-Tech Business: Entrepreneurial Experiences and Insights By JosÃ© Miguel LÃ³pez-Higuera, B. Culshaw (Editors) ISBN 978-0-8194-7180-2

Professor (Dr. Dr.) Michael S. Lebby, B. Eng. (Hons), MBA, Ph.D., D. Eng, Fellow NAI, IEEE, OSA; C. Eng.
1 Hawthorne St., unit 25a, San Francisco, CA 94105, USA; mobile +1 717 839 7078; drmlebby@gmail.com

d. http://books.google.com/books?hl=en&lr=&id=wXV9tffoGeYC&oi=fnd&pg=PR9&dq=michael+lebby&ots=cYEwXIHMDC&sig=KlCtj2ZDgbOYEhnqKdHiMo6SdzA#v=onepage&q=michael%20lebby&f=false

2009

100) Workshop: Green Photonics: The Role of Optoelectronics in a Sustainable Future, 2009
   a. 2009
   b. Workshop chairman and editor of the report:
   c. Abstract: This report explores the optoelectronics expectations for green photonics technology, and forecasts the associated markets through 2020. The cultural impact for a green, clean, and energy efficient lifestyle is just beginning. Over the next decade, many innovative new products will emerge in a variety of industries that will better define and demonstrate green photonics technology. It is clear to many that a broad range of products and services that the economy will utilize over the next decade will contain optoelectronics (interchangeable with the term photonics), either as key components or as components that enable better and more efficient systems.
   d. OIDA
   e. http://www.oida.org/home/publications/oida_publication_report_library/green_photonics_the_role_of_optoelectronics_in_a_s/

101) Conference: Optomism: "Powering the green revolution through photonics"
   a. 4th Jan 2009
   b. "Co-chairman of Optomism conference with Pennwell.
   c. OIDA and Pennwell (Laser Focus World)
   d. http://www.laserfocusworld.com/articles/print/volume-45/issue-4/world-news/conference-preview-optomism-to-emphasize-lsquogreenrsquo-growth.html

102) Invited talk, short abstract, and session chairman: Energy Efficient Photonics
   a. 19th Mar 2009
   b. Summary: Green photonics initiatives: The role of optoelectronics in a sustainable future...
   c. European Commission: High Level Event on ICT for Energy Efficiency
   d. http://ec.europa.eu/information_society/events/cf/ee09/item-display.cfm?id=2174

103) Trial & Cross: Testimony before the US-China economic and security review commission on the optoelectronics industry
   a. 24th Mar 2009
   b. "Expert witness and testimony on Capitol Hill

Professor (Dr. Dr.) Michael S. Lebby, B. Eng. (Hons), MBA, Ph.D., D. Eng, Fellow NAI, IEEE, OSA; C. Eng.
1 Hawthorne St., unit 25a, San Francisco, CA 94105, USA; mobile +1 717 839 7078; drmlebby@gmail.com

c. Final oral comments: In preparing this testimony, many people I contacted stressed the importance of decisive action by the U.S. government and industry now. Optoelectronics sits at the intersection of multiple technical disciplines. U.S. universities and industry are particularly adept at bringing diverse people together to work on complex problems. We have, by the nature of our inherent diversity, an advantage. What for many presents a challenge, for us comes naturally. Thank you for this opportunity to present our industry's perspective. "
d. United States China Commission
e. http://www.uscc.gov/hearings/2009hearings/written_testimonies/09_03_24_wrts/09_03_24_lebby_statement.pdf

104) Report: Photonics industry-university collaborations (PICs)
a. 1st Jun 2009
b. OIDA Final Technical Report
c. http://oai.dtic.mil/oai/oai?verb=getRecord&metadataPrefix=html&identifier=ADA502737

105) Paper: Green photonics technology and markets
a. Sep 2009
b. Green photonics technology will open up opportunities over the next decade for new and creative products to be designed as the interest in a green, clean and energy efficient lifestyle continues to grow. This overview forecasts the optoelectronics expectations for green photonics technology and associated markets over the next decade and explores just a few of the exciting opportunities from green photonics technology.
c. Electronics Letters, Vol 45, issue 20
d. http://ieeexplore.ieee.org/xpl/login.jsp?tp=&arnumber=5270369&url=http%3A%2F%2Fieeexplore.ieee.org%2Fiel5%2F2220%2F5270368%2F05270369.pdf%3Farnumber%3D5270369

106) Paper: Photonic Intgeration: what is the Holy Grail?
a. 14th Oct 2009
b. Compound Semiconductor
c. http://compoundsemiconductor.net/csc/features-details.php?id=40435

107) Keynote talk: Global optoelectronics and green photonics trends
a. 28th Oct 2009
b. UNCC 8th Annual Symposium: Optoelectronics Center
c. http://opticscenter.uncc.edu/node/255

108) Keynote talk and abstract: Is this the rise of green photonics?
a. Dec 2009
b. ICFO (Institut de Ciancies Fotoniques) Barcelona, Spain
c. http://www.icfo.es/images/news/ICFO%20CLP%20DAY%20Program.pdf

109) Book: 2009 Global Optoelectronics Industry Market Report and Forecast
a. Dec 2009

Professor (Dr. Dr.) Michael S. Lebby, B. Eng. (Hons), MBA, Ph.D., D. Eng, Fellow NAI, IEEE, OSA; C. Eng.
1 Hawthorne St., unit 25a, San Francisco, CA 94105, USA; mobile +1 717 839 7078; drmlebby@gmail.com

b. Comprehensive market report and forecast of current optoelectronics markets, needs, technologies, and applications. This report forecasts the current state and direction of the optoelectronics industry.
c. OIDA, 545 pages
d. http://www.oida.org/home/publications/oida_publication_report_library/2009_global_optoelectronics_industry_market_report/

110) Video presentation: Living at the speed of light
a. 10th Dec 2009
b. Living at the speed of light, hosted by renown physicist Michael Lebby, takes us on a fast paced fly through of the many facets of photonics and how the use of light touches the many aspects of our lives
c. National Research Council: Canadian Photonics Fabrication Centre
d. http://www.youtube.com/watch?v=t8EB-1-1irY

111) Book chapter: Packaging of Optical Components and Systems
a. 27th Dec 2009
b. "In this article, several types of semiconductor optical components are introduced, and packaging of optical components and systems will be discussed. Specifically, three common types of optical sources will be addressed: light emitting diodes (LED), edge-emitting semiconductor lasers, and vertical cavity surface emitting lasers (VCSEL).
c. Wiley Encyclopedia of Electrical and Electronics Engineering; DOI: 10.1002/047134608X.W2106; originally published in 1999, Vol 15, pp 499-516; John G Webster (Editor)
d. http://onlinelibrary.wiley.com/doi/10.1002/047134608X.W2106/abstract

2010

112) Workshop: Fabrication Challenges and Opportunities in Photonics, 2010
a. 2010
b. Workshop chairman and editor of the report: Abstract: This report examines different operational models employed by industry (fabless, fab-lite, pure play foundry and vertically integrated companies), and the role of governments in stimulating the growth of the photonics industry.
c. OIDA
d. http://www.oida.org/home/publications/oida_publication_report_library/fabrication_challenges_and_opportunities_in_photon/

113) Video and presentation: Green Photonics: Will it Change our Lives over the Next Decade?
a. April 2010

Professor (Dr. Dr.) Michael S. Lebby, B. Eng. (Hons), MBA, Ph.D., D. Eng, Fellow NAI, IEEE, OSA; C. Eng.
1 Hawthorne St., unit 25a, San Francisco, CA 94105, USA; mobile +1 717 839 7078; drmlebby@gmail.com

b. Photonics is growing to enable new green technologies and products. Photonics already has a large presence in various modules and components with opportunities to expand to home displays, solar cells, lighting, and various consumer applications. The global optoelectronics industry has a strong outlook for growth in the near future, with even faster growth in green photonics. Green photonics can help reduce greenhouse gas emissions, generate or conserve energy, reduce pollution, and improve human health.
c. University of California, Santa Barbara: Institute of Energy Efficiency
d. http://iee.ucsb.edu/node/1024

114) Conference and workshop: 3rd Annual Green Photonics Forum (OIDA Green 2010)
a. 10th Jun 2010
b. Conference chairman: OIDA's innovative green photonics forums have become a focal point for photonics and optics in the area of sustainable energy. The annual forum on green photonics, brings together key players involved in developing the technical and business roles of photonics in building a more sustainable and renewable future. Efficiency, monitoring, and energy generation are areas where photonics technology will play a key role and the photonics industry will deliver solutions.
c. OIDA
d. http://www.clocate.com/conference/3rd-Annual-Green-Photonics-Forum-OIDA-Green-2010/4045/

115) Paper: Silicon light emitting device based on rare earth oxide superlattice
a. Sep 2010
b. 7th IEEE International conference on Group IV photonics, Beijing China
c. http://ieeexplore.ieee.org/xpl/login.jsp?tp=&arnumber=5643407&url=http%3A%2F%2Fieeexplore.ieee.org%2Fiel5%2F5623516%2F5643317%2F05643407.pdf%3Farnumber%3D5643407

2011

116) Paper: Study of the Structural and Thermal Properties of Single Crystalline Epitaxial Rare-Earth-Metal Oxide Layers Grown on Si(111)
a. 2011
b. ECS Transactions 16, 161 (2011)
c. http://ecst.ecsdl.org/content/41/3/161

117) Webinar and presentation
a. 29th Mar 2011

Professor (Dr. Dr.) Michael S. Lebby, B. Eng. (Hons), MBA, Ph.D., D. Eng, Fellow NAI, IEEE, OSA; C. Eng.
1 Hawthorne St., unit 25a, San Francisco, CA 94105, USA; mobile +1 717 839 7078; drmlebby@gmail.com

b. "The future of photonics webinar and presentation: The Future of Photonics: Three Perspectives brings together three expert viewpoints on the future of the photonics industry (Michael Lebby will be the expert on market trends and photonic integrated circuits (PICs)). You will learn: global optoelectronics market outlook through 2021 trends in photonic integrated circuits over the next two decades."
c. Photonics Media
d. http://www.photonics.com/Webinar.aspx?WebinarID=7

118) Keynote invited speech: Green Photonics and GaN-on-Si for LEDs and Ge-on-Si for high Efficiency Multi-junction for PVs
a. Dec 2011
b. Conference proceedings: High Capacity Optical Networks and Enabling Technologies (HONET), 2011
c. http://honet.uncc.edu/archive/honet11/speakers.htm

2012

119) Paper: Structural and Thermal Properties of Single Crystalline Epitaxial Gd2O3 and Er2O3 Grown on Si(111)
a. 2012
b. ECS Journal of Solid State Science and Technology 1, N24 (2012)
c. http://jss.ecsdl.org/content/1/2/N24.full.pdf+html

120) Paper: Epitaxial Si, SiGe and Ge on binary and ternary rare earth oxide buffers
a. 2012
b. Phys. Status Solidi C 9, 2031 (2012)
c. http://onlinelibrary.wiley.com/doi/10.1002/pssc.201200255/abstract

121) Paper: Integrated high reflectivity silicon substrates for GaN LEDs
a. 13th Jan 2012
b. Volume 9, Issue 3-4, pages 814-817, March 2012, physica status solidi (c)
c. http://onlinelibrary.wiley.com/doi/10.1002/pssc.201100393/abstract

122) Paper: Integrated high reflectivity silicon substrates for GaN LEDs
a. 13th Jan 2012
b. "Conference Publication: ICNS-9 “Contributed Article Integrated high reflectivity silicon substrates for GaN LEDs
c. F. Erdem Arkun*,Rytis Dargis, Robin Smith, David Williams, Andrew Clark, Michael Lebby
d. Article first published online: 13 JAN 2012" ICNS-9 “Contributed Article Integrated high reflectivity silicon substrates for GaN LEDs
e. http://onlinelibrary.wiley.com/doi/10.1002/pssc.201100393/abstract

Professor (Dr. Dr.) Michael S. Lebby, B. Eng. (Hons), MBA, Ph.D., D. Eng, Fellow NAI, IEEE, OSA; C. Eng.
1 Hawthorne St., unit 25a, San Francisco, CA 94105, USA; mobile +1 717 839 7078; drmlebby@gmail.com

123) Paper: Rare-earth-metal oxide buffer for epitaxial growth of single crystal GeSi and Ge on Si(111)
   a. 1st Mar 2012
   b. Conference and journal publication."Rare-earth-metal oxide buffer for epitaxial growth of single crystal GeSi and Ge on Si(111)"
   c. With publication details: 28th North American Molecular Beam Epitaxy Conference, Published by AVS through the American Institute of Physics, 2012 ISBN 978-0-9836933-0-7 ISSN: 2166-27646 J.Vac.Sci.Technol B 30(2), Mar/Apr 2012 pp02B110-1 to pp-3B110-6
   d. http://ieeexplore.ieee.org/xpl/articleDetails.jsp?reload=true&arnumber=6118290&contentType=Journals+%26+Magazines
124) Paper: Scalable virtual Ge templates for III-V integration on Si wafers
   a. 18th April 2012
   b. AIP Conference Proceedings / Volume 1477 / CONCENTRATOR SOLAR CELLS, CELL ASSEMBLIES AND RELATED MATERIALS
   c. http://proceedings.aip.org/resource/2/apcpcs/1477/1/36_1?bypassSSO=1
125) Paper and talk: Engineering of the Interface Between Silicon and Rare-Earth Oxide Buffer for GaN growth
   a. Sept 2012
   b. ECS Meeting Oct 2013, San Francisco, USA
   c. http://scholar.googleusercontent.com/scholar?q=cache:l3-oHWxNDzwJ:scholar.google.com/+%22michael+lebby%22&hl=en&as_sdt=1,5&as_ylo=2013&as_vis=1
126) Paper: Scalable GaN-on-Silicon using rare earth oxide buffer layers
   a. 9th Oct 2012
   b. ECS Trans 2013 volume 50, issue 9, 1065-1071
   c. http://ma.ecsdl.org/content/MA2012-02/30/2538.short

2013

127) Paper: Expitaxial Si and Gd2O3 Heterostructures - Distributed Bragg Reflectors with Stress Management Function for GaN on Si Light Emitting Devices
   a. 2013
   b. ECS Trans 2013 volume 50, issue 4, 47-52
   c. http://ecst.ecsdl.org/content/50/4/47.short
128) Article: OPTICAL MATERIALS: 'On-silicon' engineered substrates speed photonic device development
   a. 1st Apr 2013
   b. Laser Focus World

Professor (Dr. Dr.) Michael S. Lebby, B. Eng. (Hons), MBA, Ph.D., D. Eng, Fellow NAI, IEEE, OSA; C. Eng.
1 Hawthorne St., unit 25a, San Francisco, CA 94105, USA; mobile +1 717 839 7078; drmlebby@gmail.com

c. http://www.laserfocusworld.com/articles/print/volume-49/issue-04/features/optical-materials---on-silicon--engineered-substrates-speed-phot.html

129) Paper & Poster: 100Gb/s Multi-guide vertical integration transmitter PIC in InP for fiber-optics interconnects
   a. 24th Sep 2013
   b. Sasa Ristic and Michael Lebby, Valery Tolstikhin, and Kirill Pimenov,
   c. ECOC 2013
   d. http://www.ecoc2013.org/sc2.html

130) Paper: Epitaxial Si and Gd2O3 Heterostructures - Distributed Bragg Reflectors with Stress Management Function for GaN on Si Light Emitting Devices
   a. 1st Oct 2012
   b. ECS J. Solid State Sci. Technol. 1, 246 (2012)
   c. http://jss.ecsdl.org/content/1/5/P246.full

131) Growth of GaN by MOCVD on rare earth oxide on Si(111)
   a. 31st Oct 2013
   b. ECS Transactions, 58, 455 (2013)
   c. http://ecst.ecsdl.org/content/58/4/455.short

132) Invited talk/plenary: Next generation ICs using photonics integration
   a. 10th Dec 2013
   b. Talk that reviews OneChip Photonics technology and in general PICs, OEICs, Silicon photonics, and how these technologies play into datacenters (data centers) for client side high speed 100G fiber (fibre) optic transceiver interconnects and cabling.
   c. IQE Capital markets day, Sky Pavillion, Rothschild Building, London, UK
   d. http://www.euroinvestor.com/news/2013/12/10/iqe-plc-capital-markets-day/12617916

133) Poster paper: A versatile InP OEIC (PIC) platform enabling 100G+ coherent receiver and client-side transceiver engines
   a. 12th Nov 2013
   b. Poster paper describing OneChip's latest results in coherent receivers, LR4 optical engines, and PSM4 optical engines.
   c. Silicon Photonics Workshop, Southampton University, UK
   d. http://www.orc.soton.ac.uk/UKSP_presents.html

134) Talk and panel session: Approaches for combining 3-5 and silicon, add functionality to Si photonics, heterogeneous versus hybrid integration, introduction of photonic platforms
   a. 5th Dec 2013
   b. Short presentation on PICs, OEICs, Si photonics, and combinations of these technologies from a revenue, investment, application and technology standpoint.
   c. EPIC workshop: Meet or eat? collaboration and/or competition in photonic integrated circuits (PICs)
   d. http://epic-assoc.com/contact-us/?at=94

135) Invited talk: Feedback USA/International related events

Professor (Dr. Dr.) Michael S. Lebby, B. Eng. (Hons), MBA, Ph.D., D. Eng, Fellow NAI, IEEE, OSA; C. Eng.
1 Hawthorne St., unit 25a, San Francisco, CA 94105, USA; mobile +1 717 839 7078; drmlebby@gmail.com

a. 5th Dec 2013
b. Feedback on the subject of InP PICs, OEICs, and silicon photonics from workshops and related international events from around the globe.
c. EPIC workshop: Meet or eat? Collaboration and/or competition in Photonic Integrated Circuits (PICs)?
d. http://epic-assoc.com/contact-us/?at=94

2014

136) Invited talk/plenary: High-Performance Datacenter Platform: Using InP for Silicon Photonics
a. 8th Jan 2014
b. IEEE-CPMT/Photonics Society local chapter meeting, Santa Clara, California
c. http://www.cpmt.org/scv/meetings/cpmt1401.html

137) Invited talk/Panel session "Optical interconnect in datacenters"
a. 18th Mar 2014
b. "The 1st Optical Interconnect in Data Centers Symposium takes place on the 18th and 19th of March 2014 in Berlin/ Germany.
c. It is focused on high-performance, low-energy and low-cost and small-size optical interconnects across the different hierarchy levels in data center and high-performance computing systems: on-board, board-to-board and rack-to-rack.
d. EPIC: Symposium on optical interconnect in datacenters
e. http://www.phoxtrot.eu/1st-optical-interconnect-in-data-centers-symposium/

138) Keynote talk: Photonic integration in InP: A regrowth-free platform for fabless manufacturing model
a. 19th March 2014
b. CS International Conference Frankfurt, March 17th-20th 2014
c. http://cs-international.net/agenda.php

139) Invited talk/Panel session: InP based photonics integration platform for datacenter and coherent communications
a. 2nd April 2014
b. Invited talk/panel session on the future of integrated photonics. Discussion was on both InP and silicon photonics technologies over the next decade.
c. Workshop on the future of Integrated Photonics organized by the Netherlands Office for Science & Technology is pleased to invite you to a workshop, occurring in conjunction with the upcoming Photonics West conference
d. http://www.hollandinthevalley.com/panel-discussion-on-the-future-of-integrated-photonics/

140) Invited talk and abstract: Coherent Receiver Chip for 100G DP-QPSK

Professor (Dr. Dr.) Michael S. Lebby, B. Eng. (Hons), MBA, Ph.D., D. Eng, Fellow NAI, IEEE, OSA; C. Eng.
1 Hawthorne St., unit 25a, San Francisco, CA 94105, USA; mobile +1 717 839 7078; drmlebby@gmail.com

a. 30th April 2014
b. SIOE (Semiconductor and integrated optoelectronics) Conference, Cardiff, Wales, UK 29th April-1st May 2014, Institute of Physics
c. http://www.astro.cardiff.ac.uk/research/cmp/events/resources/Sioeprogramme14final.pdf

141) Invited talk/keynote lecture: Compound semiconductors driving photonics technologies to become the future for high-speed communications through integration, performance, and sustainability
a. 12th Jun 2014
b. Glyndwr University, Wales, UK
c. http://www.glyndwr.ac.uk/en/AboutGlyndwrUniversity/Newsandmediacentre/Newsarchive/PressReleases2014/UniWeek/

142) Invited Talk/Panel session: EPIC technology workshop on Photonic Integrated Circuits (PIC) packaging standardization
a. 18th Jun 2014
b. EPIC
c. http://epic-assoc.com/contact-us/?at=94

143) Invited talk: Compound Semiconductors (CS) driving photonics
a. 11th June 2014
b. Invited presentation for Welsh Gvt and commercial industry in epitaxial growth. The talk covered photonics: global markets, green photonics, photonics technology sectors (lighting, solar, displays, sensors, communications), integrated photonics and silicon photonics. Commercial industry invite by International Quantum Epitaxy (IQE)
c. Growth and application of epitaxial heterostructures with polymorphous rare earth oxides
d. Journal of Crystal Growth
e. http://www.sciencedirect.com/science/article/pii/S0022024812009487

144) Invited presentation for Day of Photonics at Glyndwr University: Photonics - markets, applications, integrated, next generation IC
a. 21st Oct 2014
b. Invited presentation/lecture on photonics at the Glyndwr University.
c. Welsh Optoelectronic Forum (WOF)
d. http://www.wof.org.uk/home.php?page_id=4&event_id=317

145) Invited talk and moderator: Integrated photonics pilot lines
a. 14th Nov 2014
b. "Photonics Pilot Line Workshop 14 November 2014 - Brussels, Belgium
c. European Commission and Photonics21
d. http://www.photonics21.org/download/Events/DraftagendaPhotonicsPilotLineworkshop-Website.pdf

Professor (Dr. Dr.) Michael S. Lebby, B. Eng. (Hons), MBA, Ph.D., D. Eng, Fellow NAI, IEEE, OSA; C. Eng.
1 Hawthorne St., unit 25a, San Francisco, CA 94105, USA; mobile +1 717 839 7078; drmlebby@gmail.com

2015

146) Invited talk: Integrated photonics roadmap synthesis
   a. 7th May 2015
   b. Integrated Photonics Institute for Manufacturing Innovation (IP-IMI) site visit technical review:
   c. The University of Southern Californiaâ€™s (USC) Information Sciences Institute (ISI) is leading an effort with partner universities at the University of California-Los Angeles (UCLA), the University of California-Berkeley (UCB), the University of California-San Diego (UCSD), Arizona State University, the University of New Mexico, and the Ohio State University, as well as numerous industry partners, to develop the only California-based and led proposal to compete for the IP-IMI award. If successful, the proposal will receive a federal award of up to $110 million over five years. A successful proposal requires 100 percent or more in matching funds (cash or in-kind) from state and local governments and from industry partners.
   d. IPI-CDMS (Integrated Photonics Institute and Center for Design and Manufacturing Services)
   e. http://www.isi.edu/news/story/531784

147) Invited talk and Chair panel session: EPIC workshop on photonic integrated circuits; "Global integrated photonics update and roadmaps"
   a. 9th Jun 2015
   b. "Invited talk: Global integrated photonics update and roadmaps
   c. Panel Session: Integrated photonics foundry status
   d. EPIC trade association, Europe
   e. http://www.epic-assoc.com/epic-workshop-on-photonic-integrated-circuits/

148) Keynote talk and invited abstract: "Integrated photonics as a vehicle for the next generation IC"
   a. 9th Sep 2015
   b. Internet Technology Applications (ITA) ITA-15 conference Wrexham, Wales, UK 8-11th Sept 2015
   c. http://www.ita15.net/keynote-speaker/

149) Press interview: "Building Big Business with the Next Generation Integrated Circuits!"
   a. 15th Sep 2015
   b. "Insights from Michael Lebby, CEO OneChip Photonics Corporation, the keynote speaker at the Photonics Integration Conference
   c. Photonics Integration Conference, organized by Jakajima, Netherlands
   d. http://www.phiconference.com/photonics/building-big-business-with-the-next-generation-integrated-circuits/

Professor (Dr. Dr.) Michael S. Lebby, B. Eng. (Hons), MBA, Ph.D., D. Eng, Fellow NAI, IEEE, OSA; C. Eng.
1 Hawthorne St., unit 25a, San Francisco, CA 94105, USA; mobile +1 717 839 7078; drmlebby@gmail.com

150) Project advisor: European Commission ICT-28-2015 Cross-Cutting ICT KETs: Innovation Action (b) Pilot line for OLEDs on flexible substrates
   a. 20th Sept 2015
   b. European Commission
   c. http://ec.europa.eu/research/participants/portal/desktop/en/opportunities/h2020/topics/916-ict-28-2015.html

151) Project advisor: European Commission ICT-28-2015 Cross-Cutting ICT KETs: Innovation Action (b) Pilot line for analytical mid-infrared (MIR) micro-sensors
   a. 22nd Sep 2015
   b. European Commission
   c. http://ec.europa.eu/research/participants/portal/desktop/en/opportunities/h2020/topics/916-ict-28-2015.html

152) Keynote talk and abstract: "PIC the next generation IC..."
   a. 23rd Sep 2015
   b. Photonic Integration Conference, organized by Jakajima, Netherlands
   c. http://www.phiconference.com/program/

153) Project advisor: European Commission ICT-28-2015 Cross-Cutting ICT KETs: Innovation Action (b) Pilot line for PIC fabrication on III-V and/or dielectric based platforms for PICs (Photonic Integrated Circuits)
   a. 24th Sep 2015
   b. European Commission
   c. http://ec.europa.eu/research/participants/portal/desktop/en/opportunities/h2020/topics/916-ict-28-2015.html

154) Session organizer/Committee member: Market Focus at ECOC exhibit 2015
   a. 28th Sep 2015
   b. Session organizer/Committee member: Market Focus at ECOC exhibit 2015 with sessions in broadband access, datacentres, service provider optical transmission, network agility/SDN, photonics integration and packet optical transport. Nexus Business Media Ltd
   c. http://webcache.googleusercontent.com/search?q=cache:Qb68vjzhV5IJ:www.ecocexhibition.com/visitorhome/marketfocus2015/cfs+&cd=1&hl=en&ct=clnk&gl=us&client=safari

2016

155) Reviewer: European Commission ICT-29-2016: Photonics KET 2016 (section a(i) Biophotonics: advanced imaging for in-depth disease diagnosis)
   a. 10th May 2016
   b. European Commission

Professor (Dr. Dr.) Michael S. Lebby, B. Eng. (Hons), MBA, Ph.D., D. Eng, Fellow NAI, IEEE, OSA; C. Eng.
1 Hawthorne St., unit 25a, San Francisco, CA 94105, USA; mobile +1 717 839 7078; drmlebby@gmail.com

c. http://ec.europa.eu/research/participants/portal/desktop/en/opportunities/h2020/topics/5094-ict-29-2016.html

156) Reviewer: European Commission ICT-29-2016: Photonics KET 2016 (a(iii) Pervasive high-specificity and high-sensitivity sensing for a safer environment)
   a. 12th May 2016
   b. European Commission

157) Reviewer: European Commission ICT-29-2016 Photonics KET (b) Innovation Actions (i) Application driven core photonic devices integrated in systems.
   a. 14th May 2016
   b. European Commission
   c. http://ec.europa.eu/research/participants/portal/desktop/en/opportunities/h2020/topics/5094-ict-29-2016.html

158) European Commission Reviewer: European Commission ICT-29-2016 Photonics KET (b) Innovation Actions (ii) Pilot line for assembly and packaging
   a. 15th May 2016
   b. European Commission
   c. http://ec.europa.eu/research/participants/portal/desktop/en/opportunities/h2020/topics/5094-ict-29-2016.html
   d. http://ec.europa.eu/research/participants/portal/desktop/en/opportunities/h2020/topics/5094-ict-29-2016.html

159) Invited Talk: Annual Shareholder Meeting 2016 - Market Perspective LWLG Polymer Photonics vs Legacy Devices
   a. 20th May 2016
   b. Presentation to investor group at Lightwave Logic's Annual Shareholder Meeting Lightwave Logic
   c. http://lightwavelogic.com/company-updates/

160) Technical presentation for Lightwave Logic Inc., at the Annual Shareholder Meeting (ASM).
   a. 20th May 2016
   b. Lightwave logic Inc., Boulder, Colorado.
   c. Annual shareholder meeting for Lightwave Logic Inc., with live presentation with live Q&A from investors

161) Invited Presentation and abstract: "High-Performance Polymer Photonics for Next-Generation Photonic Integrated Circuits"
   a. 3rd Oct 2016
   b. ECOC Market Focus by ECOC Exhibition
   c. http://www.ecocexhibition.com/marketfocus

162) Video Interview: ECOC Market Focus on Datacenters and emerging new PIC technologies that include silicon and polymer photonics
   a. 3rd Oct 2016
   b. Video taped interview by ECOC Exhibition Market Focus on Datacenters and emerging new PIC technologies that include polymer photonics.
   c. ECOC Exhibition

Professor (Dr. Dr.) Michael S. Lebby, B. Eng. (Hons), MBA, Ph.D., D. Eng, Fellow NAI, IEEE, OSA; C. Eng.
1 Hawthorne St., unit 25a, San Francisco, CA 94105, USA; mobile +1 717 839 7078; drmlebby@gmail.com

d. http://www.ecocexhibition.com/interviews2016

163) Panel session: European Commission ICT-29-2016: Photonics KET 2016 (section a(ii) Breakthrough in miniaturization of SSL light engines and systems); comment on industry and academic technology.
   a. 5th Nov 2016
   b. http://ec.europa.eu/research/participants/portal/desktop/en/opportunities/h2020/topics/5094-ict-29-2016.html

164) Reviewer: European Commission ICT-29-2016: Photonics KET 2016 (section a(ii) Breakthrough in miniaturization of SSL light engines and systems)
   a. 5th Nov 2016
   b. European Commission: Reviewing submitted technical photonics proposals for Horizon 2020, and rate proposals to EU guidelines.
   c. http://ec.europa.eu/research/participants/portal/desktop/en/opportunities/h2020/topics/5094-ict-29-2016.html

2017

165) Invited Talk and Panelist: Emerging Technologies Summit; Integrated Photonics session, Stanford University, as part of the Kingdom of the Netherlands trade mission to Silicon Valley
   a. 10th Jan 2017
   b. "Discussion with HRH Prince Constantijn and DG Bertolt Leeftink about photonics ecosystem and startups. Photonics highlights (Michael Lebby)
   c. Consulate General San Francisco, The Kingdom of Netherlands
   d. https://ez.atavist.com/emerging-technologies-summit

166) Video: The importance of photonics roadmapping
   a. 30th Jan 2017
   b. Video on the importance of roadmapping photonics technologies at Photonics West San Francisco, 30th Jan 2017. Interview by Photon Delta.
   c. http://www.photondelta.eu

167) Technical Advisor/Expert: 2nd review of MIRPHAB pilot line consortium funded by H2020 at European Commission
   a. 20th Feb 2017
   b. 2nd review for MIRPHAB consortium at the European Commission, Brussels
   c. European Commission, Brussels
   d. https://www.iaf.fraunhofer.de/en/research/research-areas/semiconductor-lasers/mirphab.html

168) Technical Advisor/Expert: 2nd review of PI-SCALE project pilot line funded by H2020, European Commission

Professor (Dr. Dr.) Michael S. Lebby, B. Eng. (Hons), MBA, Ph.D., D. Eng, Fellow NAI, IEEE, OSA; C. Eng.
1 Hawthorne St., unit 25a, San Francisco, CA 94105, USA; mobile +1 717 839 7078; drmlebby@gmail.com

a. 21st Feb 2017
b. 2nd review of PI-SCALE consortium pilot line at European Commission, Brussels
c. European Commission, Brussels, Belgium
d. http://pi-scale.eu

169) Technical Advisor/Expert: 1st review of PIXAPP pilot line consortium funded by H2020 at European Commission
a. 21st Feb 2017
b. 1st Review of Pixapp project at EU Commission as part of the pilot line project.
c. European Commission, Brussels
d. http://www.fabiodisconzi.com/open-h2020/projects/206352/index.html

170) Invited Talk: Belgium LWLG Investor Group at the Royal Antwerp Golf Club
a. 6th Mar 2017
b. Invited talk entitled "High performance polymer photonics for next generation PICs"
c. Belgium LWLG Investor Group
d. http://www.lightwavelogic.com

171) Chairman: PIC (Photonic Integrated Circuits) International Conference, Brussels, Belgium
a. 7th Mar 2017
b. "Photonic Integrated Circuits International
c. CS International
d. http://www.picinternational.net

172) Invited Talk: Photonics Integration Circuits - Global Market Analysis 2017
a. 13th Mar 2017
b. Invite by The Netherlands Department of Economics to review PIC technology and markets for potential investment.
c. The Dutch Government - Dept of Economics, The Hague together with Photon Delta, The Netherlands
d. http://www.photondelta.eu

173) Technical Advisor/Expert: 2nd review of PIX4LIFE pilot line consortium funded by H2020 at European Commission
a. 14th Mar 2017
b. 2nd review of PIX4LIFE pilot line consortium at the European Commission, Brussels.
c. European Commission, Brussels, Belgium
d. http://www.pix4life.eu

174) Keynote talk: Entitled "The rise of PIC based technologies over the next decade and how datacenters and telecom may enable other exciting applications"
a. 1st May 2017
b. Xilinx as part of their; "Xilinx silicon technology series seminars"
c. http://www.xilinx.com

Professor (Dr. Dr.) Michael S. Lebby, B. Eng. (Hons), MBA, Ph.D., D. Eng, Fellow NAI, IEEE, OSA; C. Eng.
1 Hawthorne St., unit 25a, San Francisco, CA 94105, USA; mobile +1 717 839 7078; drmlebby@gmail.com

175) Invited Talk: Lightwave Logic Inc Annual Shareholder Meeting "High Performance Polymer Photonics for Next Generation PICs"
   a. 18th May 2017
   b. Presentation of corporate technology and strategy for Lightwave Logic Inc and polymer PIC platforms.
   c. Lightwave Logic Inc (OTCQB:LWLG)
   d. http://www.lightwavelogic.com/presentations

176) Management/CEO presentation for Lightwave Logic Inc., at the Annual Shareholder Meeting (ASM).
   a. 18th May 2017
   b. Lightwave logic Inc., Boulder, Colorado.
   c. Annual shareholder meeting for Lightwave Logic Inc., with live presentation with live Q&A from investors.

177) Plenary Talk: Global Market Research at the World Technology Mapping Forum, s'Hertogenbosch, Netherlands
   a. 14th Jun 2017
   b. "PhotonDelta and the AIM Photonics Academy are organising the first meeting of the World Technology Mapping Forum. The goal of the forum is to produce the first International Photonic Systems Roadmap, looking ahead to global technology needs in 2030 and beyond.
   c. PhotonDelta, Netherlands as part of the International Photonics System Roadmap (IPSR) conference
   d. https://worldtechnologymappingforum.org/the-programme

178) Video interview: World Photonic Mapping Forum; s'Hertogenbosch, Netherlands
   a. 15th Jun 2017
   b. Interview on photonics roadmaps.
   c. PhotonDelta (via Videographer Jonathan Marks)
   d. https://worldtechnologymappingforum.org/the-programme

179) Invited video 'Lightwave Logic roadmaps for polymer photonics at the 3rd International Roadmap conference, Eindhoven, Netherlands
   a. 16th June 2017
   b. PhotonDelta video PR team
   c. https://vimeo.com/317216466

180) Invited talk and abstract: Polymer based PICs
   a. 14th Sep 2017
   b. ECOC, Datacenter technologies. Sweden

181) Video: Polymer based PICs
   a. 15th Sep 2017 ECOC, Sweden as part of Market Focus at the ECOC Exhibit. (youtube: Michael Lebby ECOC 2017)

182) Keynote invited talk and abstract: PIC based technologies
   a. 22nd Sep 2017
   b. PIC Conference, The Netherlands

Professor (Dr. Dr.) Michael S. Lebby, B. Eng. (Hons), MBA, Ph.D., D. Eng, Fellow NAI, IEEE, OSA; C. Eng.
1 Hawthorne St., unit 25a, San Francisco, CA 94105, USA; mobile +1 717 839 7078; drmlebby@gmail.com

183) Invited talk and abstract: Polymer PIC technology as part of the Photonics Integrated Circuits (PIC) conference in Eindhoven, Netherlands.
   a. 5th Oct 2017
   b. PIC technologies and polymer photonics
184) Invited talk: PIC Training conference/workshop in Sunnyvale, Silicon Valley
   a. PIC training session/workshop
185) Invited talk: Photonics Pilot Lines
   a. 8th Dec 2017
   b. European Commission, Photonics Proposers Meeting, Brussels

2018

186) International Roadmap meeting at Berenshot, Utrecht, Netherlands
   a. 20th Jan 2018
   b. Invited talk: International Roadmap meeting: Datacom/Telecom ICT markets, AOC, and Polymer PIC technology platforms
187) Co-Chairman: PIC (Photonic Integrated Circuits), International Conference, Brussels, Belgium
   a. 10th Apr 2018
   b. Photonic Integrated Circuits International
   c. CS International
   d. http://www.picinternational.net
188) Session chair and moderator: High volume, high performance PICs (Photonic Integrated Circuits) at the International Conference, Brussels, Belgium
   a. 10th Apr 2018
   b. Photonic Integrated Circuits International
   c. CS International
   d. http://www.picinternational.net
189) Session chair and moderator: Silicon Photonics (SiP) PICs (Photonic Integrated Circuits) at the International Conference, Brussels, Belgium
   a. 11th Apr 2018
   b. Photonic Integrated Circuits International
   c. CS International
   d. http://www.picinternational.net
190) Invited Talk: Scalable PIC platforms: "The impact of using polymer PICs for 100 and 400Gbps datacom applications," PICs (Photonic Integrated Circuits) at the International Conference, Brussels, Belgium
   a. 10th Apr 2018
   b. Photonic Integrated Circuits International

Professor (Dr. Dr.) Michael S. Lebby, B. Eng. (Hons), MBA, Ph.D., D. Eng, Fellow NAI, IEEE, OSA; C. Eng.
1 Hawthorne St., unit 25a, San Francisco, CA 94105, USA; mobile +1 717 839 7078; drmlebby@gmail.com

c. CS International
d. http://www.picinternational.net

191) Management/CEO presentation for Lightwave Logic Inc., at the Annual Shareholder Meeting (ASM).
a. 17th May 2018
b. Lightwave logic Inc., Denver, Colorado.
c. Annual shareholder meeting for Lightwave Logic Inc., with live presentation with live Q&A from investors.

192) Invited video 'Welcome to WTMF 18' at the 2nd International Roadmap conference, Eindhoven, Netherlands
a. 12th June 2018
b. PhotonDelta video PR team
c. https://vimeo.com/275376937

193) Reviewer: European Commission ICT-03-2018: Photonics Pilot lines (InP and silicon photonics PICs)
a. 11th Jun 2018
b. European Commission: Reviewing submitted technical photonics proposals for Horizon 2020, and rate proposals to EU guidelines.
c. http://ec.europa.eu/research/participants/portal/desktop/en/opportunities/h2020

194) Reviewer: European Commission ICT-04-2018: Tbps optical fiber optic transceivers
a. 11th Jun 2018
b. European Commission: Reviewing submitted technical photonics proposals for Horizon 2020, and rate proposals to EU guidelines.
c. http://ec.europa.eu/research/participants/portal/desktop/en/opportunities/h2020

195) Reviewer: European Commission ICT-04-2018: Connected lighting
a. 11th Jun 2018
b. European Commission: Reviewing submitted technical photonics proposals for Horizon 2020, and rate proposals to EU guidelines.
c. http://ec.europa.eu/research/participants/portal/desktop/en/opportunities/h2020

196) Workgroup chair and moderator: Telecom long haul roadmap committee at the International world mapping conference, Enschede, Netherlands
a. 20th Jun 2018
b. Photondelta Conference: chairing technical workgroup meetings to address photonics roadmap trends and challenges.
c. Photondelta in coordination with iNEMI, and AIM photonics.
d. https://www.photondelta.eu

197) Invited talk: Telecom, Datacom, and ICT roadmap committee at the International world mapping conference, Enschede, Netherlands
a. 20th Jun 2018
b. Photondelta Conference: chairing technical workgroup meetings to address photonics roadmap trends and challenges.
c. Photondelta in coordination with iNEMI, and AIM photonics.

Professor (Dr. Dr.) Michael S. Lebby, B. Eng. (Hons), MBA, Ph.D., D. Eng, Fellow NAI, IEEE, OSA; C. Eng.
1 Hawthorne St., unit 25a, San Francisco, CA 94105, USA; mobile +1 717 839 7078; drmlebby@gmail.com

d. https://www.photondelta.eu

198) Invited talk and abstract: Pushing the performance of 50Gbps NRZ polymer modulators towards 100Gbps NRZ in a PIC platform to access 400 and 800Gbps data-rates
a. 25th Sep 2018
b. ECOC, Datacenter technologies. Sweden

199) Reviewer (European Commission) for pilot line PISCALE
a. 18th Sept 2018
b. European Commission, Brussels
c. PISCALE is a pilot line that is focused on bringing to commercial market flexible organic display technologies in both panel and reel to reel formats.

200) Reviewer (European Commission) for pilot line MIPHAB
a. 19th Sept 2018
b. European Commission, Brussels
c. MIPHAB is a pilot line that is focused on bringing to commercial market near infra-red devices and packaging for industrial, defense, military and high volume applications.

201) Video: Pushing the performance of 50Gbps NRZ polymer modulators towards 100Gbps NRZ in a PIC platform to access 400 and 800 Gbps datarates.
a. 25th Sept 2018
b. ECOC, Market Focus at the ECOC Exhibit, (Youtube: Michael Lebby ECOC 2018)

202) Invited talk and abstract: ECOC International Symposium on Hybrid PICs entitled "Polymer PICs: technology and prospects"
a. 26th Sept 2018
b. International Symposium on Hybrid PICs co-located at the ECOC conference, Rome, Italy.

203) Reviewer (European Commission) for pilot line PIXAPP
a. 2nd Oct 2018
b. European Commission, Brussels
c. PIXAPP is a pilot line that is focused on bringing to commercial market PIC (photonic integrated circuit) packaging solutions for InP and silicon photonics based technologies.

204) Reviewer (European Commission) for pilot line PIX4LIFE
a. 3rd Oct 2018
b. European Commission, Brussels
c. PIX4LIFE is a pilot line that is focused on bringing to commercial market PIC dielectric solutions for applications in the visible wavelength range in the medical applications market.

Professor (Dr. Dr.) Michael S. Lebby, B. Eng. (Hons), MBA, Ph.D., D. Eng, Fellow NAI, IEEE, OSA; C. Eng.
1 Hawthorne St., unit 25a, San Francisco, CA 94105, USA; mobile +1 717 839 7078; drmlebby@gmail.com

2019

205) Invited talk: Polymer modulators and polymer PIC technologies: PIC Training conference/workshop in Sunnyvale, Silicon Valley
   a. 28th Jan 2019
   b. PIC training session/workshop at Keysight facility
206) Reviewer (European Commission) for pilot line MIPHAB
   a. 16th Feb 2019
   b. European Commission, Brussels
   c. MIPHAB is a pilot line that is focused on bringing to commercial market near infra-red devices and packaging for industrial, defense, military and high volume applications.
207) Reviewer (European Commission) for pilot line PIX4LIFE
   a. 25th Mar 2019
   b. European Commission, Brussels
   c. PIX4LIFE is a pilot line that is focused on bringing to commercial market PIC dielectric solutions for applications in the visible wavelength range in the medical applications market.
208) Co-Chairman: PIC (Photonic Integrated Circuits), International Conference, Brussels, Belgium
   a. 26-27th Mar 2019
   b. Photonic Integrated Circuits International
   c. CS International
   d. http://www.picinternational.net
209) Session chair and moderator: High volume, high performance PICs (Photonic Integrated Circuits) for Foundries at the International Conference, Brussels, Belgium
   a. 26th Mar 2019
   b. Photonic Integrated Circuits International
   c. CS International
   d. http://www.picinternational.net
210) Session chair and moderator: High volume PICs (Photonic Integrated Circuits) at the International Conference, Brussels, Belgium
   a. 27th Mar 2019
   b. Photonic Integrated Circuits International
   c. CS International
   d. http://www.picinternational.net
211) Invited Talk: Polymer PICs for 400Gbps+ datacom applications," PICs (Photonic Integrated Circuits) at the International Conference, Brussels, Belgium
   a. 27th Mar 2019
   b. Photonic Integrated Circuits International
   c. CS International

Professor (Dr. Dr.) Michael S. Lebby, B. Eng. (Hons), MBA, Ph.D., D. Eng, Fellow NAI, IEEE, OSA; C. Eng.
1 Hawthorne St., unit 25a, San Francisco, CA 94105, USA; mobile +1 717 839 7078; drmlebby@gmail.com

d. http://www.picinternational.net

212) Reviewer (European Commission) for project CARDIS
   a. 18th Apr 2019
   b. European Commission, Brussels
   c. CARDIS is an EU project for PIC based technology to monitor blood flow and artery stiffness in the human body using long wavelength lasers and silicon photonics.

213) Management/CEO presentation for Lightwave Logic Inc., at the Annual Shareholder Meeting (ASM).
   a. 16th May 2019
   b. Lightwave logic Inc., Denver, Colorado.
   c. Annual shareholder meeting for Lightwave Logic Inc., with live presentation with live Q&A from investors with presentation: https://drive.google.com/file/d/1wh8irF8rmi9bU6VeGKAHFqVURyUcytdX/view?usp=sharing

214) Reviewer: European Commission ICT-03-2019: Fiber optic communications and bio-photonics for medical applications
   a. 6th June 2019
   b. European Commission: Reviewing submitted technical photonics proposals for Horizon 2020, and rate proposals to EU guidelines.
   c. http://ec.europa.eu/research/participants/portal/desktop/en/opportunities/h2020

215) Workgroup chair and moderator: Datacom roadmap committee at the International world mapping conference, Berlin, Germany
   a. 12th June 2019
   b. Photondelta Conference: chairing technical workgroup meetings to address photonics roadmap trends and challenges.
   c. Photondelta in coordination with iNEMI, and AIM photonics.
   d. https://www.photondelta.eu

216) Keynote speaker: 'Global markets for PIC technologies' at the 3rd International world mapping conference, at the Fraunhofer HHI, Berlin, Germany
   a. 15th June 2019
   b. Photondelta Conference: chairing technical workgroup meetings to address photonics roadmap trends and challenges.
   c. Photondelta in coordination with iNEMI, and AIM photonics.
   d. https://www.photondelta.eu

217) Reviewer: European Commission ICT-05-2019: Pilot lines (free form optics and integrated photonics for bio-medical applications
   a. 16th June 2019
   b. European Commission: Reviewing submitted technical photonics proposals for Horizon 2020, and rate proposals to EU guidelines.
   c. http://ec.europa.eu/research/participants/portal/desktop/en/opportunities/h2020

218) Invited speaker: 'Lightwave Logic polymer modulator platform' at the Spring Investor Conference, NYC, NY

Professor (Dr. Dr.) Michael S. Lebby, B. Eng. (Hons), MBA, Ph.D., D. Eng, Fellow NAI, IEEE, OSA; C. Eng.
1 Hawthorne St., unit 25a, San Francisco, CA 94105, USA; mobile +1 717 839 7078; drmlebby@gmail.com

a. 2nd April 2019
b. Spring Investor Summit (Microcap Conference) (www.springinvestorsummit.com

219) Invited video 'Lightwave Logic polymer modulator platform' at the Spring Investor Conference, NYC, NY
a. 2nd April 2019
b. Spring Investor Summit (Microcap Conference)
c. https://www.youtube.com/watch?v=Mn4oICQpVTQ

220) Invited video 'Lightwave Logic advancing its silicon photonic prototypes" by Proactive, (https://www.proactiveinvestors.com)NY
a. 2nd April 2019
b. Proactive video (Wall St) series: https://www.youtube.com/watch?v=3B0oGXvyogA
c. Lightwave Logic, Inc. (OTCQX: LWLG) CEO Michael Lebby tells Proactive the Englewood, Colorado-based technology platform company is in discussions with large and small players within the telecommunications and data-communications space, including companies who are involved in the manufacturing routers.

221) Reviewer: (European Commission) for project InSiDe
a. 29th Apr 2019
b. European Commission, Brussels
c. InSiDe is an EU project for PIC based technology in the medical field to monitor blood flow and artery stiffness in the human body using long wavelength lasers and silicon photonics. Hospital clinical trials will be conducted. It is a follow-on with more clinical trials from the initial CARDIS EU project.
d. http://www.inside-h2020.eu

222) Invited video Interview by EPIC CTO Jose Pozo in EPIC's Photonics Industry Luminary video series.
a. 28th Jan 2019 (at Photonics West conference in San Francisco)
b. EPIC Trade Association, Europe
c. https://www.youtube.com/watch?v=e_V4TeTSwaM

223) Invited video 'Global Markets and Trends' at the 3rd International Roadmap conference, Faunhofer HHI, Berlin Germany
a. 16th June 2019
b. PhotonDelta video PR team
c. https://vimeo.com/341952732

224) Reviewer (European Commission) for pilot line PISCALE
a. 11th Sept 2019
b. European Commission, Brussels
c. PISCALE is a pilot line that is focused on bringing to commercial market flexible organic display technologies in both panel and reel to reel formats.

225) Invited talk and abstract: ECOC International Symposium on Hybrid PICs entitled "Polymer modulators enable the next generation of speeds and low power in optical networks"
a. 22nd Sept 2019

Professor (Dr. Dr.) Michael S. Lebby, B. Eng. (Hons), MBA, Ph.D., D. Eng, Fellow NAI, IEEE, OSA; C. Eng.
1 Hawthorne St., unit 25a, San Francisco, CA 94105, USA; mobile +1 717 839 7078; drmlebby@gmail.com

b. International Symposium and workshop (WO5) on Hybrid PICs,
c. ECOC conference 2019, Dublin, Ireland
d. https://www.ecoc2019.org/workshop.html

226) Invited talk and abstract: "Polymer modulators with >50GHz performance for power consumption reduction at 400, 800, and 1600 Gbaud aggregated data-rates"
a. 24th Sept 2019
b. Market Focus Session, Photonics Integration and Digital Silicon Photonics,
c. ECOC 2019, Dublin, Ireland
d. https://www.ecocexhibition.com/visit/market-focus/market-focus-2019-timetable/

227) Video: Polymer modulators with >50GHz performance for power consumption reduction at 400, 800, and 1600 Gbaud aggregated datarates"
a. 24th Sept 2019
b. ECOC, Market Focus at the ECOC Exhibit, (Youtube: Michael Lebby ECOC 2019)
c. ECOC 2019, Dublin, Ireland

228) Chairman and moderator, Market Focus ECOC 2019 session: Service and Content Provider Optical Transmission
a. 24th Sept 2019
b. Market Focus Session #5, ECOC 2019, Dublin, Ireland
c. https://www.ecocexhibition.com/visit/market-focus/market-focus-2019-timetable/

229) Chairman and moderator, Market Focus ECOC 2019 session: Optical Network Agility/Software Defined Networks
a. 24th Sept 2019
b. Market Focus Session #7, ECOC 2019, Dublin, Ireland
c. https://www.ecocexhibition.com/visit/market-focus/market-focus-2019-timetable/

230) Reviewer (European Commission) for pilot line MIPHAB
a. 10th Dec 2019
b. European Commission, Brussels
c. MIPHAB is a pilot line that is focused on bringing to commercial market near infra-red devices and packaging for industrial, defense, military and high-volume applications.

2020

231) Webinar: Wall Street resource
a. 9th Jan 2020
b. Lightwave Logic HQ facilities in Denver, Colorado

Professor (Dr. Dr.) Michael S. Lebby, B. Eng. (Hons), MBA, Ph.D., D. Eng, Fellow NAI, IEEE, OSA; C. Eng.
1 Hawthorne St., unit 25a, San Francisco, CA 94105, USA; mobile +1 717 839 7078; drmlebby@gmail.com

c. A 30min recorded webinar answering questions on Lightwave Logic and its business plans, technology and plans for the future.

232) Invited video Interview by EPIC in EPIC's Photonics Industry video series on European funded pilot lines.
   a. 5th Feb 2020 (at Photonics West conference in San Francisco)
   b. EPIC Trade Association, Europe

233) Reviewer (European Commission) for pilot line InPULSE
   a. 19th Mar 2020
   b. European Commission, Brussels
   c. InPULSE is a pilot line that is focused on bringing to commercial market InP based photonic integrated circuits (PICs) for fiber communications, both datacom as well as telecom high-volume applications.

234) Keynote and Plenary speaker SPIE Photonics Europe International Conference
   a. Originally 31st March (then moved to 7th April 2020)
   b. Strasbourg, France (the plenary talk was completed using audio embedded powerpoint video remotely).
   c. The conference was held virtually in 2020 and the talk was attended by over 1000 attendees/visits.
   d. https://spie.org/profile/michael.lebby-4009?SSO=1

235) Chairman (elected) of ECOC Market Focus technical committee as part of the ECOC Exhibition.
   a. 10th May 2020
   b. Committee hosted and organized by ECOC Exhibition
   c. Market Focus Committee at: : https://www.ecocexhibition.com/visit/market-focus/

236) Invited speaker and presentation at Lightwave Logic Annual Shareholder meetings 2020 with Business Management Update, and presentation entitled, "Lightwave logic business review"
   a. 14th May 2020
   b. Presentation can be found at: https://drive.google.com/file/d/1xfisLKe6QIykCAIMjOZ0XdiR-Ht_O7zZ/view?usp=sharing
   c. Hosted by Lightwave Logic Inc. and MZ Group (Investor Relations)

237) Co-Chair (and summit host) of online summit for PIC International virtual session with live Q&A.
   a. 19th May 2020
   b. Hosted by Angel Tech (https://onlinesummit.angel-tech.net/breakout/pic-international)
   c. Virtual conference with combination of pre-recorded presentations, live presentations, and live Q&A. Over 150 attendees.

238) Invited video clip on PIC technologies for online summit of PIC International conference.
   a. 19th May 2020

Professor (Dr. Dr.) Michael S. Lebby, B. Eng. (Hons), MBA, Ph.D., D. Eng, Fellow NAI, IEEE, OSA; C. Eng.
1 Hawthorne St., unit 25a, San Francisco, CA 94105, USA; mobile +1 717 839 7078; drmlebby@gmail.com

b. Video clip (2:04) can be found at https://onlinesummit.angel-tech.net/breakout/pic-international
c. Summit host's introduction to the online summit PIC conference.

239) Invited speaker, EPIC 24hr Photonics World Tour virtual conference with talked entitled; "EO Polymers enable high speed and low power modulators at 1550nm and 1310nm."
a. 24th Jun 2020
b. EPIC 24hr Photonics World Tour final talk #72 and concluding remarks.
c. https://www.epic-assoc.com/24hours/ and video on Youtube at: https://www.youtube.com/watch?v=aiUSlfxP1z0 starting at 46:00

240) Invited paper/article entitled, "Electro-Optic Polymers Improve Speed and Power Efficiency" with co-authors Karen Liu and Cory Pecinovsky, Lightwave Logic Inc.
a. 5th Aug 2020
b. Published by Photonics Spectra magazine,
c. Hosted by photonics.com https://www.photonics.com/Articles/Electro-Optic_Polymers_Improve_Speed_and_Power/p5/vo180/i1193/a65902

241) Invited video interview, "2020 Market Focus and technology trends for ECOC 2020, Brussels, Belgium" as Chairman of ECOC 2020 Market Focus Technical Committee
a. 5th Aug 2020
b. Market Focus Exhibition for ECOC 2020,
c. Hosted by ECOC exhibition: https://www.ecocexhibition.com/visit/market-focus/

242) Chair and invited speaker, PIC International virtual conference on PICs: PIC Virtual II with presentation entitled; "Optical devices and industry roadmaps."
a. 2nd Nov 2020
b. PIC International Conference, (https://picmagazine.net/article/112351/AngelTech_Virtual_2_-_The_Sequel_Proves_A_Hit_Success) and (https://onlinesummit.angel-tech.net)

243) Invited speaker, EPIC Virtual Conference on Datacenters (in collaboration with EA and COBO) with presentation entitled; "Using polymer modulators to upgrade your PIC + Industry Roadmaps."
a. 4th Nov 2020
b. EPIC Trade Association and subsequent YouTube video (https://www.youtube.com/watch?v=tHh-z724D2g) and also at EPIC: https://www.epic-assoc.com/epic-online-technology-meeting-on-datacenter-interconnects-in-cooperation-with-cobo-and-ea/
c. Hosted by EPIC
d. Hosted by CS International and PIC International (Angel Business, London)

244) Reviewer (European Commission) for pilot line PIX4LIFE
a. 2nd Dec 2020
b. European Commission, Brussels (virtual review)

Professor (Dr. Dr.) Michael S. Lebby, B. Eng. (Hons), MBA, Ph.D., D. Eng, Fellow NAI, IEEE, OSA; C. Eng.
1 Hawthorne St., unit 25a, San Francisco, CA 94105, USA; mobile +1 717 839 7078; drmlebby@gmail.com

c. PIX4LIFE is a pilot line that is focused on bringing to commercial market PIC dielectric solutions for applications in the visible wavelength range in the medical applications market.

2021

245) Invited speaker, EPIC Photonics Plus conference (virtual) with a talk entitled "Polymer Plus™: Upgrading your PIC with Ultrafast and Low Power Modulators."
   a. 16th Feb 2021
   b. EPIC Trade Association https://photonicsplus.com and also at EPIC: https://photonicsplus.com/exhibitors/
   c. Hosted by EPIC

246) Invited speaker (updated virtual presentation), EPIC Photonics Plus conference (virtual) with a talk entitled "Commercializing Polymer Modulators."
   a. 10th Mar 2021
   b. EPIC Trade Association https://photonicsplus.com and also at https://www.lightwavelogic.com/presentation/video-presentation-commercializing-polymer-modulators/
   c. Hosted by EPIC

247) Invited Webinar and panelist: Roth Capital Partners (https://www.roth.com/Page/Corporate-Access-Past-Conferences)
   a. 17th Mar 2021
   b. 33rd Annual Roth Conference
   c. Financial investment conference for public company review. Panelist for answering questions by bankers, investment specialists, and fund managers on Lightwave Logic and its business plans, technology and plans for the future.

248) Invited white paper/article entitled, "Polymers for Fiber Optic Communications: What does the Integrated Photonics Roadmap Say" co-authors Michael Lebby and Karen Liu, Lightwave Logic Inc.
   a. 24th Mar 2021
   b. Published by Lightwave Logic Inc., (https://www.lightwavelogic.com/wp-content/uploads/sites/319/2021/03/WP_IPSR-Roadmap-Decoded.pdf)
   c. Executive summary: The IPSR (Integrated Photonic Systems Roadmap), a recent broad collaboration that unified the efforts of multiple established photonics roadmap efforts, describes the key technology bottlenecks for a broad array of applications and most promising solutions to overcome them. This whitepaper highlights the portion of the roadmap specific to fiber optic communications and within that the implications for the role of electro-optic polymers. Key findings identify critical advances that will be needed over the next decade to support the

Professor (Dr. Dr.) Michael S. Lebby, B. Eng. (Hons), MBA, Ph.D., D. Eng, Fellow NAI, IEEE, OSA; C. Eng.
1 Hawthorne St., unit 25a, San Francisco, CA 94105, USA; mobile +1 717 839 7078; drmlebby@gmail.com

growth of very high data rate applications. By the end of the decade, integration of electronics with photonics will be part of broad integrated platforms. Innovative materials technologies such as polymers can be useful to enhance integrated photonics platforms with the use of high- speed modulators and passive optical interconnects.

249) Reviewer (European Commission) for pilot line Phabulous
   a. 31st Mar 2021
   b. Via European Commission (virtual review)
   c. Phabulous is a pilot line that is focused on bringing to commercial market micro-optics and free-form optics technology. Focus is on SMEs, prototyping and small volume manufacturing.

250) Chair and invited speaker, PIC International virtual conference on PICs: PIC Virtual III with presentation entitled; "Integrated photonic roadmaps."
   a. 12th Apr 2021
   b. PIC International Conference, (https://picmagazine.net/article/112351/AngelTech_Virtual_2_-_The_Sequel_Proves_A_Hit_Success) and (https://onlinesummit.angel-tech.net)
   c. Hosted by CS International and PIC International (Angel Business, London)

251) Reviewer (European Commission) for pilot line InPULSE (also known as Jeppix)
   a. 23rd Apr 2021
   b. Via European Commission (virtual review)
   c. InPULSE is a pilot line that is focused on bringing to commercial market InP based photonic integrated circuits (PICs) for fiber communications, both datacom as well as telecom high-volume applications.

252) Invited speaker, EPIC Virtual Conference on PIC Packaging with presentation entitled; "Integrated photonics roadmaps: enabling high performance packaging."
   a. 26th Apr 2021
   b. EPIC Trade Association and subsequent YouTube video (https://www.youtube.com/watch?v=tHh-z724D2g) and also at EPIC: https://www.epic-assoc.com/epic-online-technology-meeting-on-pic-packaging/
   c. Hosted by EPIC

253) Invited conference and panelist: Oppenheimer 6th Annual Virtual Emerging Growth Conference (https://www.oppenheimer.com/events/2021/6th-annual-emerging-growth-conference.aspx)
   a. 11th May 2021
   b. Oppenheimer 6th Annual Virtual Emerging Growth Conference.
   c. Financial investment conference for public company review. Panelist for answering questions with a variety of bankers, investment specialists, and fund managers on Lightwave Logic and its business plans, technology and plans for the future.

254) Invited speaker and presentation at Lightwave Logic Annual Shareholder meetings 2021 with Business Management Update, and presentation entitled, "Lightwave logic business review"

Professor (Dr. Dr.) Michael S. Lebby, B. Eng. (Hons), MBA, Ph.D., D. Eng, Fellow NAI, IEEE, OSA; C. Eng.
1 Hawthorne St., unit 25a, San Francisco, CA 94105, USA; mobile +1 717 839 7078; drmlebby@gmail.com

a. 27th May 2021
b. Presentation can be found at: https://www.lightwavelogic.com/presentation/2021-asm-business-update-por-lightwave-logic-ceo-dr-michael-lebby/
c. Hosted by Lightwave Logic Inc. and MZ Group (Investor Relations)

255) Keynote speaker for PITC opening ceremony with presentation entitled, "Photonic Integrated Circuits (PICs): Enabling our future…"
a. 2nd June 2021
b. Agenda at: https://brainporteindhoven.com/en/events/launch-photonics-integration-techology-center and presentation at: https://www.lightwavelogic.com/presentation/photonic-integration-technology-center-keynote/
c. Hosted by PITC (Photonics Integrated Technology Center); Photon Delta, TNO, Eindhoven University, Twente University.

256) Invited speaker: LD Micro Invitational XI conference (virtual) with presentation entitled, "Lightwave Logic Investor Presentation"
a. 10th June 2021
b. Presentation at: https://api.mziq.com/mzfilemanager/v2/d/307dbc8b-e212-48ba-9968-8cef3f6b5188/8c054319-48a6-bd6b-2a0c-66e56f5f489f?origin=2
c. Hosted by LD Micro NASDAQ: SRAX

257) Invited video interview: "2021 Market Focus and technology trends for ECOC 2021, Bordeaux, France" as Chairman of ECOC 2021 Market Focus Technical Committee
a. 15th June 2021
b. Market Focus Exhibition for ECOC 2021,
c. Hosted by ECOC exhibition: https://www.ecocexhibition.com/visit/market-focus/

258) Invited speaker at HC Wainwright non-deal roadshow (virtual)
a. 3rd and 4th August 2021
b. Presentation of "Lightwave Logic investor presentation"
c. Hosted by HC Wainwright Investment Bank

259) Invited speaker at Q3 Investor Summit (virtual)
a. 17th and 18th August 2021
b. Presentation of "Lightwave Logic investor presentation" and link: https://drive.google.com/file/d/1mH0bCzOd8UxtvN6FeR50KIP7moFsFhjJ/view?usp=sharing
c. Hosted by Investor Summit (https://investorsummitgroup.com)

260) Invited speaker and video recording at HC Wainwright conference (virtual)
a. 13-15th September 2021
b. Presentation of "Lightwave Logic investor presentation"
c. Hosted by HC Wainwright Investment Bank

261) Invited speaker and video interview at NASDAQ for 10th September 2021 marketing closing. Live interview at NASDAQ HQ in Times Square, NYC.
a. 10th September 2021
b. Live interview for TV networks of Lightwave Logic's aspirations.

Professor (Dr. Dr.) Michael S. Lebby, B. Eng. (Hons), MBA, Ph.D., D. Eng, Fellow NAI, IEEE, OSA; C. Eng.
1 Hawthorne St., unit 25a, San Francisco, CA 94105, USA; mobile +1 717 839 7078; drmlebby@gmail.com

c. Hosted by NASDAQ at their TV studios: https://www.nasdaq.com/videos/lightwave-logic-inc.-rings-the-nasdaq-stock-market-opening-bell

262) Invited interview to close the week of trading at NASDAQ on 10th September, 2021 with live speech, and televised session. The closing was carried by CNBC, FOX, Bloomberg, BNN networks during the close session.
   a. 10th September, 2021
   b. Live interview for Lightwave Logic, and live market closing for NASDAQ
   c. Hosted by NASDAQ at their TV studios: https://youtu.be/8dmHC8MeF6E
   a. https://youtu.be/8dmHC8MeF6E

263) TV and video interview by TD Ameritrade in conjunction with the ringing of the closing bell at NASDAQ on 10th September, 2021
   a. 10th September 2021
   b. Live TV interview on TD Ameritrade at NASDAQ studios, Time Square, NYC
   c. Hosted by TD Ameritrade financial network; https://tdameritradenetwork.com/video/rB4A-HvPH-2Be9Hw1tYC0w

264) Session chairman: ECOC Market Focus technical committee as part of the ECOC Exhibition: sessions included PIC and Silicon Photonics, Optics in Cloud computing, optical transmission (SDN, network agility), Fiber Access, 5G, Cable, PON, FTTX, FTTC, Fiber to the room, New technologies and optical systems, New markets, and new packaging platforms.
   a. 13th September 2021
   b. Committee hosted and organized by ECOC Exhibition
   c. Market Focus Committee at: : https://www.ecocexhibition.com/visit/market-focus/

265) Invited video interview: "2021 Market Focus impact for ECOC 2021, Bordeaux, France" as Chairman of ECOC 2021 Market Focus Technical Committee at the conference by ECOC TV https://www.youtube.com/watch?v=VrFeSwqnWAk
   a. 13th September 2021
   b. Market Focus Exhibition for ECOC 2021,
   c. Hosted by ECOC exhibition: https://www.ecocexhibition.com/visit/market-focus/ with video at

266) Invited talk and abstract: "Advancing integrated photonics with elector-optic polymer modulators".
   a. 13th September 2021
   b. Market Focus Session, PIC and SiPH/Datacenters/Optics in cloud computing, https://www.ecocexhibition.com/visit/market-focus/market-focus-2021-session-details/
   c. ECOC 2021, Bordeaux, France

267) Winner: Acceptance of glass trophy for ECOC Industry awards on behalf of Lightwave Logic in the optical integration category: https://www.ecocexhibition.com/visit/ecoc-exhibition-industry-awards/

Professor (Dr. Dr.) Michael S. Lebby, B. Eng. (Hons), MBA, Ph.D., D. Eng, Fellow NAI, IEEE, OSA; C. Eng.
1 Hawthorne St., unit 25a, San Francisco, CA 94105, USA; mobile +1 717 839 7078; drmlebby@gmail.com

a. 14th September 2021
b. Product Focus session, ECOC Exhibition Industry Award Winner Announcement
c. ECOC 2021, Bordeaux, France

268) Interview: ECOC Industry awards on behalf of Lightwave Logic in the optical integration category by ECOC TV
a. 14th September 2021
b. Product Focus session, ECOC Exhibition Industry Award Winner Announcement
c. ECOC 2021, Bordeaux, France

269) Video interview: PIC International Conference November 9-11, Brussels, Belgium
a. 24th September 2021
b. Overview of conference, technical sessions, and integrated photonics
c. PIC International, Brussels, Belgium as part of the online web portal presence.

270) Reviewer (European Commission) for pilot line InPULSE (also known as Jeppix)
a. 21st Sep 2021
b. Via European Commission (virtual review)
c. MedPhab is a pilot line that is focused on bringing to commercial market silicon photonics based technologies for medical applications. Demonstrator use-cases as prototype products have been selected for the validation of the pilot line technologies covering both *in-vivo* and *in-vitro* domains. The cases include: manufacturing a disposable plasmonic-fluidic sensors and a wearable PCI temperature sensor.
d. https://medphab.eu

271) Reviewer: (European Commission) for pilot line MIRPHAB
a. 28th Sep 2021
b. Via European Commission (virtual review)
c. MIRPHAB is a pilot line that is focused on bringing to commercial market infra-red wavelength modules and technologies based on quantum cascade lasers, MIR detectors, Antimonide based compound semiconductors and their associated packaging.
d. https://www.iaf.fraunhofer.de/en/research/research-areas/semiconductor-lasers/mirphab.html

272) Reviewer: (European Commission) for pilot line InPULSE (also known as Jeppix)
a. 1st Oct 2021
b. Via European Commission (virtual review)
c. InPULSE is a pilot line that is focused on bringing to commercial market InP based photonic integrated circuits (PICs) for fiber communications, both datacom as well as telecom high-volume applications.
d. https://www.inpulse.jeppix.eu

273) Invited Video presentation: LD Micro Main Investor conference entitled "Investor Presentation for LD Micro"
a. 12th October 2021

Professor (Dr. Dr.) Michael S. Lebby, B. Eng. (Hons), MBA, Ph.D., D. Eng, Fellow NAI, IEEE, OSA; C. Eng.
1 Hawthorne St., unit 25a, San Francisco, CA 94105, USA; mobile +1 717 839 7078; drmlebby@gmail.com

b. For virtual attendees at the LD Micro conference in Los Angeles (Luxe Hotel), California
c. Invited video presentation for virtual audience at LD Micro main event in LA California: https://www.meetmax.com/sched/event_76871/conference_home.html
d. https://www.youtube.com/watch?v=JEvSV8qYGMA

274) Invited audio interview: LD Micro for BIZPOD (the Drill Down by Cory Johnson).
a. 12th October 2021
b. Located at LD Micro main in LA, California
c. BIZPOD audio interview as part of their start-up entrepreneur series: https://www.bizpod.net

275) Invited oral presentation: Includes Q&A for LD Micro Main Investor conference entitled "Investor Presentation for LD Micro"
a. 12th October 2021
b. For live in-person attendees at the LD Micro conference in Los Angeles (Luxe Hotel), California
c. Invited live presentation on Lightwave Logic technology and business plans for virtual audience at LD Micro main event in LA California: https://www.meetmax.com/sched/event_76871/conference_home.html
d. https://www.youtube.com/watch?v=JEvSV8qYGMA and https://me21.mysequire.com/recording?session_id=d354f581-6ab6-47d9-99de-d642c1c25d87

276) Invited Video presentation: Ladenburg Thalmann Virtual Technology Expo conference entitled "Investor Presentation for Ladenburg Thalmann virtual Technology Expo Investor Presentation"
a. Video-taped on 27th October 2021 for release on 18th November 2021
b. For virtual attendees at the Thalmann Virtual Technology Expo conference.
c. Invited video presentation for virtual audience at 2021 Ladenburg Thalmann Virtual Technology Expo: https://ladenburg21.mysequire.com
d. Presentation can be found at: https://ladenburg21.mysequire.com

277) Invited video: Chairmans introduction to the 5th PIC International Conference, www.picinternational.net,
a. 7th-10th November 2021
b. Conference hosted by Angel events.
c. Sheraton Airport Hotel, Brussels, Belgium.

278) Session Chairman: 2nd PIC Pilot Line Conference, , www.picinternational.net,
a. 7th November 2021
b. Conference hosted by Angel events.
c. Sheraton Airport Hotel, Brussels, Belgium.

279) Keynote speaker: Includes presentation entitled, "PIC Pilot Lines: Competitive Positioning" as part of the of 2nd PIC Pilot Line Conference, , www.picinternational.net,
a. 7th November 2021
b. As of the conference hosted by Angel events.

Professor (Dr. Dr.) Michael S. Lebby, B. Eng. (Hons), MBA, Ph.D., D. Eng, Fellow NAI, IEEE, OSA; C. Eng.
1 Hawthorne St., unit 25a, San Francisco, CA 94105, USA; mobile +1 717 839 7078; drmlebby@gmail.com

c. Sheraton Airport Hotel, Brussels, Belgium.

280) Session chairman: 5th PIC International conference, www.picinternational.net
a. 8-10th November 2021
b. Conference hosted by Angel events together with CS International, SSI International, and PIC Pilot Line Conference.
c. Sheraton Airport Hotel, Brussels, Belgium.

281) Invited Panelist: For the panel entitled, "PICs for LIDAR" of 6th PIC International conference, www.picinternational.net
a. 8-10th November 2021
b. Conference hosted by Angel events together with CS International, SSI International, and PIC Pilot Line Conference.
c. Sheraton Airport Hotel, Brussels, Belgium.

282) Invited speaker: With presentation entitled, "Increasing power efficiency with electro-optic (EO) polymers" at the 5th PIC International conference, www.picinternational.net in the day 2 session, "PICs vision- evolution and revolution"
a. 8-10th November 2021
b. Conference hosted by Angel events together with CS International, SSI International, and PIC Pilot Line Conference.
c. Sheraton Airport Hotel, Brussels, Belgium.

283) Keynote speaker: For Macrotrends (http://arnaerteconomics.com/dagvandetips2020/) investor conference (https://vimeo.com/653240070) and talk entitled "Investor Presentation'
a. 12th November 2021
b. Conference hosted by Marcotrends with 200 in person attendees, and 3-500 online attendees.
c. Ghent, Belgium

284) Invited Live TV interview: Benzinga (Spencer Israel show).
a. TV interview on 7th Dec 2021 with youtube recording: https://www.youtube.com/watch?v=kS-7FVTNE2Y
b. Presentation can be found at: https://www.youtube.com/watch?v=kS-7FVTNE2Y and the Spencer Israel show/background at https://www.linkedin.com/in/spencer-israel-44b02b31/ and https://www.benzinga.com/author/spencer-israel

2022

285) Invited Live TV interview: Benzinga (Spencer Israel show).
a. TV interview on 11th Feb 2022 with youtube recording: https://www.youtube.com/watch?v=jFiB9P3voUk

Professor (Dr. Dr.) Michael S. Lebby, B. Eng. (Hons), MBA, Ph.D., D. Eng, Fellow NAI, IEEE, OSA; C. Eng.
1 Hawthorne St., unit 25a, San Francisco, CA 94105, USA; mobile +1 717 839 7078; drmlebby@gmail.com

b. Presentation can be found at: https://www.youtube.com/watch?v=jFiB9P3voUk and the Spencer Israel show/background at https://www.linkedin.com/in/spencer-israel-44b02b31/ and https://www.benzinga.com/author/spencer-israel

286) Invited Webinar and panelist: Roth Capital Partners at the 34th Annual Roth Dana Point Conference, (https://www.roth.com/Page/Corporate-Access-Past-Conferences) with Lightwave Logic investor presentation and meetings.

a. 13-15th March 2022
b. 34th Annual Roth Deer Valley Conference (invite only)
c. Financial investment conference for public company review. Panelist for answering questions by bankers, investment specialists, and fund managers on Lightwave Logic and its business plans, technology and plans for the future.

287) Invited Article and Interview entitled: "Q&A: Electro-optic polymers herald a new age of ultra-fast communication." With Digital Journal (https://www.digitaljournal.com), and interviewer; Dr. Tim Sandle.

a. Digital Journal interview and publication on 1st April 2022 in the Digital Journal.
b. Article and interview can be found at: https://www.digitaljournal.com/tech-science/qa-electro-optic-polymers-herald-a-new-age-of-ultra-fast-communication/article

288) Invited Article entitled: "Electro-optic polymers allow faster, more efficient data transmission." With Broadband Communities (https://www.bbcmag.com)

a. Published in Broadband Communities 13th April 2022.
b. Article can be found at: https://www.bbcmag.com/pub/doc/BBC_Mar22_webFINAL.pdf

289) Invited video: Chairmans introduction to the 6th PIC International Conference, www.picinternational.net, recorded on 10th May 2022.

a. 8th May 2022 to be published in May 2022 for the conference being held on 27-29th June 2022
b. Conference hosted by Angel events.
c. Sheraton Airport Hotel, Brussels, Belgium.

290) Invited speaker at Oppenheimer 7th Annual Emerging Growth Conference (virtual)

a. 10th May 2022
b. Presentation of "Lightwave Logic investor presentation"
c. Hosted by Oppenheimer Investment Bank: https://www.meetmax.com/sched/event_80933/conference_invlogin.html?event_id=80933&username=LWLG&confirmation_number=MVRJ8BYW865 and https://www.oppenheimer.com/events/2022/7th-annual-emerging-growth-conference.aspx

291) Invited interview: Authority Magazine: "The future of communication technology"

a. 11th May 2022, and published 18th May 2022.
b. Interview on the future of communications, hosted by https://medium.com/authority-magazine

Professor (Dr. Dr.) Michael S. Lebby, B. Eng. (Hons), MBA, Ph.D., D. Eng, Fellow NAI, IEEE, OSA; C. Eng.
1 Hawthorne St., unit 25a, San Francisco, CA 94105, USA; mobile +1 717 839 7078; drmlebby@gmail.com

c. Interview with David Liu, Authority Magazine

292) Reviewer (European Commission) for pilot line InPULSE (also known as Jeppix)
   a. 17th May 2022
   b. Via European Commission (virtual review)
   c. InPULSE is a pilot line that is focused on bringing to commercial market InP based photonic integrated circuits (PICs) for fiber communications, both datacom as well as telecom high-volume applications.

293) Invited speaker and presentation at Lightwave Logic Annual Shareholder meetings 2022 with Business Management Update, and presentation entitled, "Lightwave logic CEO management review"
   a. 26th May 2022
   b. Presentation can be found at: https://www.lightwavelogic.com/presentation/2021-asm-business-update-por-lightwave-logic-ceo-dr-michael-lebby/ and stream-video at: https://viavid.webcasts.com/starthere.jsp?ei=1544482&tp_key=3c8d96d340
   c. Hosted by Lightwave Logic Inc. and MZ Group (Investor Relations)

294) Invited oral presentation: LD Micro 12th Annual LD Micro Invitational conference with presentation entitled, "Lightwave Logic"
   a. 7th June 2022
   b. Presentation Webcast can be found at: https://me21.mysequire.com/
   c. Hosted by LD Micro NASDAQ: SRAX and located at Four Seasons in Westlake Village, California on 7-8th June 2022.

295) Invited video presentation: LD Micro XII Annual Invitational conference, recorded on 25th May 2022 (https://ldinv12.sequireevents.com)
   a. 7th June 2022
   b. Presentation at: : https://me21.mysequire.com/
   c. Hosted by LD Micro NASDAQ: SRAX at the Four Seasons in Westlake Village, California on 7-8th June 2022.

296) Invited speaker and presentation at MIT IPSRI roadmap event with presentation entitled "Transceiver roadmap 2022".
   a. 10th June 2022
   b. Presentation can be found at: https://photonicsmanufacturing.org/how-get-involved
   c. and https://www.eventbrite.com/e/2022-spring-ipsr-i-roadmap-meeting-tickets-323380047427
   d. Hosted by IPRSI, MIT, and PhotonDelta world photonics roadmap

297) Board member Optica's Corporate Engagement Council, with activities focusing on industrial membership, marketing, conferences, workshops, meetings etc., for the photonics community globally.
   a. 10th June 2022, election to the CEC (https://www.optica.org/en-us/about/leadership_and_volunteers/councils/councils/
   b. CEC listing: https://www.optica.org/en-us/about/leadership_and_volunteers/councils/councils/#Industry

Professor (Dr. Dr.) Michael S. Lebby, B. Eng. (Hons), MBA, Ph.D., D. Eng, Fellow NAI, IEEE, OSA; C. Eng.
1 Hawthorne St., unit 25a, San Francisco, CA 94105, USA; mobile +1 717 839 7078; drmlebby@gmail.com

c. Optica (Optical Society of America – previous name)

298) Reviewer: European Commission HORIZON-CL4-2022-DIGITAL-EMERGING-01-38 (CSA): International cooperation in semiconductors
   a. 8th June 2022
   b. European Commission: Reviewing submitted technical and coordinated support actions for electronics and photonics proposals for Horizon 2022 evaluation calls and rate proposals to EU guidelines.
   c. CSA:http://ec.europa.eu/research/participants/portal/desktop/en/opportunities/h2020

299) Reviewer: European Commission HORIZON-CL4-2022-DIGITAL-EMERGING-01-03: Advanced multi-sensing systems.
   a. 10th June 2022
   b. European Commission: Reviewing submitted technical photonics proposals for Horizon 2022 evaluation calls and rate proposals to EU guidelines.
   c. RIA:http://ec.europa.eu/research/participants/portal/desktop/en/opportunities/h2020

300) Invited live interview with Dan Loney, Wharton Business Daily Radio Station
   a. 15th June 2022
   b. Wharton Business Daily live radio interview. Subject: Lightwave Logic business and technology plans for growth: https://twitter.com/whartonbizdaily?lang=en
   c. Location: virtual recording at Lightwave Logic, Englewood, CO.

301) Invited speaker at Diamond Equity Research Emerging Growth Invitational Conference (virtual)
   a. 17th June 2022
   b. Presentation of "Lightwave Logic investor presentation"
   c. Hosted by Diamond Equity Research Bank: https://www.diamondequityresearch.com/conferences/ at Lightwave Logic, Englewood, Colorado.

302) Invited video interview: "2022 Market Focus impact for ECOC 2022, Basel, Switzerland" as Chairman of ECOC 2022 Market Focus Technical Committee at the conference by ECOC TV (link to be published)
   a. 17th June 2022
   b. Market Focus Exhibition, technical sessions and awards for ECOC 2022,
   c. Hosted by ECOC exhibition: https://www.ecocexhibition.com/ecoc-exhibition-2022/ and recorded virtually in San Francisco, CA.

303) Invited interview: MicrocapDaily: "Microcapdaily Interviews Dr. Michael Lebby CEO of Lightwave Logic, Inc. (NASDAQ: LWLG) On Radical Innovation Needed to Keep the Internet Growing"
   a. 23rd June 2022
   b. Interview on the radical innovation needed for the internet and optical networking, hosted by https://microcapdaily.com/microcapdaily-interviews-dr-michael-lebby-ceo-of-lightwave-logic-inc-nasdaq-lwlg-on-radical-innovation-needed-to-keep-the-internet-growing-2/

Professor (Dr. Dr.) Michael S. Lebby, B. Eng. (Hons), MBA, Ph.D., D. Eng, Fellow NAI, IEEE, OSA; C. Eng.
1 Hawthorne St., unit 25a, San Francisco, CA 94105, USA; mobile +1 717 839 7078; drmlebby@gmail.com

c. Interview with Boe Rimes, Microcap Daily

304) Session chairman: 6th PIC International conference, www.picinternational.net
a. 28-29th June 2022
b. Conference hosted by Angel events together with CS International and SSI International.
c. Sheraton Airport Hotel, Brussels, Belgium.

305) Invited Panelist: For the panel entitled, "Optica Industry Panel: Hybrid Integration" of 6th PIC International conference, www.picinternational.net
a. 28-29th June 2022
b. Conference hosted by Angel events together with CS International, and SSI International.
c. Sheraton Airport Hotel, Brussels, Belgium.

306) Invited speaker: With presentation entitled, "Enabling low power consumption optical networking using high speed, low power polymer modulators" at the 6th PIC International conference, www.picinternational.net in the day 2 session, "Optimizing the PIC architecture"
a. 28-29th June 2022
b. Conference hosted by Angel events together with CS International, and SSI International.
c. Sheraton Airport Hotel, Brussels, Belgium.

307) Invited speaker: "Status of Lightwave Logic and electro-optic polymers" at the Cleydael Golf Club, Antwerp, Belgium (www.cleydael.be)
a. 30th June 2022
b. Meeting organized by Belgium and Dutch retail investors of Lightwave Logic Inc. (NASDAQ:LWLG)
c. Location: Belgium

308) Invited Article for 6th PIC conference entitled, "PIC International proved to be a fantastic success" (https://angel-tech.net/marketing/2022/mailers/post-show/pic/)
a. 7th July 2022
b. Conference hosted by Angel events together with CS International, and SSI International.
c. Sheraton Airport Hotel, Brussels, Belgium.

309) Invited Live TV interview: Benzinga All Access Fireside Chat (Zunaid Suleman show).
a. TV interview on 22nd July 2022 with youtube recording: https://www.youtube.com/watch?v=TyKY9R8WT_U
b. Video interview can be found at: https://www.benzinga.com/markets/emerging-markets/22/07/28231018/lightwave-logic-the-company-with-a-proprietary-solution-to-make-transmitting-data-faster and the Zunaid Suleman show/background at https://www.benzinga.com/events/speakers/zunaid-suleman/
c. Location: Virtually recorded in Washington DC

310) Invited Live TV interview with SNN network show Planet MicroCap Podcast and host Robert Kraft: https://www.youtube.com/watch?v=zCD-hTKtkLg

Professor (Dr. Dr.) Michael S. Lebby, B. Eng. (Hons), MBA, Ph.D., D. Eng, Fellow NAI, IEEE, OSA; C. Eng.
1 Hawthorne St., unit 25a, San Francisco, CA 94105, USA; mobile +1 717 839 7078; drmlebby@gmail.com

a. 22nd July 2022
b. Hosted by SNN and Robert Kraft, and video interview can be found at: https://podcasts.apple.com/us/podcast/lightwave-logic-nasdaq-lwlg-designing-modulators-that/id1024217659?i=1000574742796
c. Location: Virtually recorded in Washington DC

311) Invited Live Radio interview with Bloomberg markets radio show and hosts Paul Sweeney and Matt Miller. Topic, "Lightwave Logic background, radical innovation, business plans, impact on the internet, and where will the industry go in 5years?" Link to radio interview: "Efficient Data Transmission (Audio)."
a. 9th August 2022
b. Hosted by Paul Sweeney and Matt Miller at Bloomberg Market Radio show https://www.bloombergradio.com/shows/bloomberg-markets-am/
c. Location: recorded at Lightwave Logic, Englewood, Colorado.

312) Invited video interview with Smart Photonics' "50 Leaders of change" to address where the internet is going from a technology, photonics, and optical networking system perspective. Filmed by London based TBD Media and can be found at: https://vimeo.com/tbdmediagroup/review/742996199/8dc9821c7a. with interview at 3:00-50.
a. 10th August 2022
b. Hosted and videoed by TBD Media hub on Bloomberg.com
c. Location: Filmed at Lightwave Logic HQ in Englewood, Colorado and released on 9th November 2022.

313) Invited talk: Jefferies Semiconductors, IT Hardware & Communications Infrastructure Summit
a. 29-31st August 2022
b. Hosted by Jefferies Investment Banking
c. Sofitel Hotel, Chicago, Illinois

314) Invited lecture – TU/e (University of Eindhoven, Netherlands); Electrical Engineering (Photonics); "Polymer Modulators"
a. 2nd September 2022
b. Hosted by Photonics Integrated Circuits team, Electrical Engineering, TU/e
c. TU/e (Eindhoven University), Eindhoven, Netherlands

315) Invited review PhD thesis and defense that included review of thesis, public questions for the candidate and ceremonial procession. Amir Abbas Kashi's thesis is entitled, "Electro-optic slot waveguide phase modulators on the InP membrane on silicon platform"
a. 2nd September 2022
b. Hosted by TU/e Electrical Engineering, integrated photonics department with co-reviewers including: Prof. J. Leuthold, Prof. K. Williams, and Prof Van der tol.
c. TU/e (Eindhoven University), Eindhoven, Netherlands

316) Invited keynote talk as part of the 'New Materials in PICs' at "EPIC meeting on CMOS compatible integrated photonics at IMEC." With link to website: https://epic-assoc.com/events/epic-meeting-on-cmos-compatible-integrated-photonics-at-imec/

Professor (Dr. Dr.) Michael S. Lebby, B. Eng. (Hons), MBA, Ph.D., D. Eng, Fellow NAI, IEEE, OSA; C. Eng.
1 Hawthorne St., unit 25a, San Francisco, CA 94105, USA; mobile +1 717 839 7078; drmlebby@gmail.com

a. 7-8th September 2022 with the talk on the 8th September 2022
b. Hosted by IMEC and EPIC photonics association. With EPIC photonics at: https://epic-assoc.com
c. Location at Leuven, Belgium at IMEC 1 foundry.

317) Invited speaker: "Status of Lightwave Logic and electro-optic polymers for foundry applications" at the Cleydael Golf Club, Antwerp, Belgium (www.cleydael.be)
a. 8th September 2022
b. Meeting organized by Belgium and Dutch retail investors of Lightwave Logic Inc. (NASDAQ:LWLG)
c. Location: Belgium

318) Invited talk at HW Wainwright conference called: 'H.C. Wainwright 24th Annual Global Investment Conference', with a talk entitled, "Lightwave Logic Investor Presentation" and link to website: https://journey.ct.events/hub/660eb381-b261-4d25-afae-35b654ed04c1 and https://hcwco.com
a. 12 and 13th September 2022 (talk on 13th September 2022)
b. Meeting organized by HC Wainwright Investment Banking (https://hcwco.com)
c. Location: Lotte Palace Hotel, New York City, NY

319) Invited interview: Interviewed by Greg Bryan at Telegeography (https://www2.telegeography.com) Podcast which can be found at: https://telegeography.podbean.com/ as well as https://blog.telegeography.com/simply-illuminating-considering-the-future-of-optical-transport
a. 16th September 2022
b. Published by Telegeography Podcast and Greg Bryan on 27th September 2022
c. Virtual interview

320) Invited review article: Subject was for EPIC on their CMOS-foundry workshop : https://epic-assoc.com/events/epic-meeting-on-cmos-compatible-integrated-photonics-at-imec/
a. 13th September 2022
b. Published by EPIC photonics association and associated media outlets
c. Review written in NYC, 13th September 2022

321) Invited article: Ping! Zine technology insights and can be found at: https://www.pingzine.com/featured-article/the-radical-innovation-of-a-new-polymer-internet/
a. 29th September 2022
b. Published by Ping! Zine technology insights on 29th September 2022
c. Ping! Zine publishes in-depth content through authoritative contribution and thorough interviews with technology subject matter experts across multiple disciplines including cloud, data center, AI, big data, cybersecurity and more.

322) Session chairman: ECOC Market Focus technical committee as part of the ECOC Exhibition: sessions included PIC and Silicon Photonics, Optics in Cloud computing, optical transmission (SDN, network agility), Fiber Access, 5G, Cable, PON, FTTX, FTTC, Fiber to the room, new technologies and optical systems, new markets, and new packaging platforms.

Professor (Dr. Dr.) Michael S. Lebby, B. Eng. (Hons), MBA, Ph.D., D. Eng, Fellow NAI, IEEE, OSA; C. Eng.
1 Hawthorne St., unit 25a, San Francisco, CA 94105, USA; mobile +1 717 839 7078; drmlebby@gmail.com

a. 19-21st September 2022
b. Committee hosted and organized by ECOC Exhibition
c. Market Focus Committee at: : https://www.ecocexhibition.com/visit/market-focus/

323) Invited video interview: "2022 Market Focus impact for ECOC 2022, Basel, Switzerland," as Chairman of ECOC 2022 Market Focus Technical Committee at the conference by ECOC TV https://youtu.be/X8iQoB4vqaA
a. 20th September 2022
b. Market Focus Exhibition for ECOC 2022,
c. Hosted by ECOC exhibition: https://www.ecocexhibition.com/visit/market-focus/

324) Invited talk and abstract: "Utilizing foundries to scale hybrid electro-optic polymer modulators" with Dr. John Zyskind, VP Engineering, Lightwave Logic Inc: https://www.ecocexhibition.com/visit/market-focus/components-ics-pics-fiber/
a. 19th September 2022
b. Market Focus Session, PIC components https://www.ecocexhibition.com/visit/market-focus/market-focus-timetable-2022/
c. ECOC 2022, Basel, Switzerland

325) Interview, industry award chairman, and award presentation to Market Focus Industry Award winners: ECOC exhibition industry awards (in conjunction with optical connections magazine) https://www.ecocexhibition.com/visit/ecoc-exhibition-industry-awards/ :
a. 20th September 2022
b. Product Focus session, ECOC Exhibition Industry Award Winner Announcement
c. ECOC 2022, Basel, Switzerland

326) Market Focus Interview: ECOC TV on behalf of Lightwave Logic in the optical integration category by ECOC TV and can be found at: https://youtu.be/nRd3dYCozUM
a. 21st September 2022
b. Market Focus Session, PIC components https://www.ecocexhibition.com/visit/market-focus/market-focus-timetable-2022/
c. ECOC 2022, Basel, Switzerland

327) Invited talk and panelist for ECOC Rump session, with talk entitled, "Hybrid Integration Roadmap: From pilot production to production in a semiconductor fab" at ECOC technical conference, chaired by Dr Jose Pozo, CTO Optica.
a. 21st September 2022
b. ECOC Rump session
c. ECOC 2022, Basel, Switzerland

328) Paper (co-author): Post-deadline submission to ECOC 2022 entitled, "Thermally Stable Silicon-Organic Hybrid (SOH) Mach-Zehnder Modulator for 140 GBd PAM4 Transmission With Sub-1 v Drive Signals (Th3B.2) given by Carsten Eschenbaum, *Karlsruhe Inst Tech (KIT)* and SilOriX Gmbh.
a. 22nd September 2022

Professor (Dr. Dr.) Michael S. Lebby, B. Eng. (Hons), MBA, Ph.D., D. Eng, Fellow NAI, IEEE, OSA; C. Eng.
1 Hawthorne St., unit 25a, San Francisco, CA 94105, USA; mobile +1 717 839 7078; drmlebby@gmail.com

b. ECOC Post Deadline session 1; 13:42 to 13:54pm https://www.optica.org/events/topical_meetings/ecoc/schedule/?day=Thursday#Th3B.2
c. ECOC 2022, Basel, Switzerland

329) Cited Acknowledgement for Post Deadline Paper: Post-deadline submission to ECOC 2022 entitled, ">500 GHz Bandwidth Graphene Photodetector Enabling Highest-Capacity Plasmonic-to-Plasmonic Links (Th3B.5) given by Stefan Koepfli, *Eidgenossische Technische Hochschule (ETH) Zurich*.
a. 22nd September 2022
b. ECOC Post Deadline session 1; 14:18 to 14:30pm https://www.optica.org/events/topical_meetings/ecoc/schedule/?day=Thursday#Th3B.5
c. ECOC 2022, Basel, Switzerland

330) Invited presentation: Diamond Equity Research's annual Spotlight Emerging Growth Invitational Virtual Investor Conference, with a presentation entitled, "Lightwave Logic Investor Presentation" and can be found at https://us02web.zoom.us/webinar/register/WN_2aoRT-XPSZiCFd1cLkVrXA and https://finance.yahoo.com/news/diamond-equity-research-host-spotlight-113000297.html
a. 4th October 2022 (10:20-10:50am East coast time)
b. Diamond Equity Research's Spotlight Emerging Growth Invitational Virtual Investor Conference, conferences@diamondequityresearch.com
c. Recorded 30th September 2022 virtually at LWLG.

331) Invited interview: Interviewed by Cory Johnson at The Drill Down podcast (https://twitter.com/drilldownpod?lang=en) Podcast which can be found at: https://www.iheart.com/podcast/269-the-drill-down-81530167/as well as https://twitter.com/DrillDownPod/status/1449964020522360836
a. 7th October 2022
b. Published by The Drill Down Podcast and Cory Johnson on 17th October 2022
c. Virtual interview

332) Invited oral presentation: LD Micro Main Event XV conference with presentation entitled, "Lightwave Logic Update"
a. 25th October 2022
b. Oral presentation details can be found at: https://www.meetmax.com/sched/event_86249/conference_home.html as well as https://www.meetmax.com/sched/event_86249/conference_presentations.html?bank_access=0&event_id=86249
c. Hosted by LD Micro NASDAQ: SRAX

333) Invited video presentation: LD Micro Main Event XV conference, recorded on 25th October 2022
a. 25th October 2022
b. Presentation at: https://www.meetmax.com/sched/event_86249/conference_presentations.html?bank_access=0&event_id=86249

Professor (Dr. Dr.) Michael S. Lebby, B. Eng. (Hons), MBA, Ph.D., D. Eng, Fellow NAI, IEEE, OSA; C. Eng.
1 Hawthorne St., unit 25a, San Francisco, CA 94105, USA; mobile +1 717 839 7078; drmlebby@gmail.com

c. Hosted by LD Micro NASDAQ: SRAX at the Luxe Sunset Boulevard Hotel LA 24-26th October 2022

334) Invited closing comments: Optica Co-packaged and pluggable optics industry summit. Comments were on pluggables vs co-packaged integrated photonics solutions, roadmapping, and transceiver trends on data rate and low power consumption.
   a. 25th and 26th October 2022
   b. Details on the event can be found at: https://www.optica.org/en-us/events/industry_events/2022_optica_industry_summit/
   c. Hosted by Optica (formally OSA) https://www.optica.org/en-us/home/ at Du Pont's innovation laboratories Sunnyvale, CA.

335) Invited speaker: Photonics Spectra Annual Conference with presentation entitled, "How electro-optic polymers boost PIC speed and power efficiency".
   a. Recorded on 28th October 2022, for 9-11th January 2023
   b. Details on the event can be found at: https://www.photonics.com/Advertise/MarketingBlog.aspx?AID=68312
   c. Hosted by Photonics Spectra (www.photonics.com)

336) Invited talk at the Board meeting of Optica's Corporate Engagement Council. Presentation on focusing to increase industrial membership, improve marketing, optimize conferences and workshops for the industrial photonics community globally.((https://www.optica.org/en-us/about/leadership_and_volunteers/councils/councils/
   a. 1st November 2022,
   b. CEC listing: https://www.optica.org/en-us/about/leadership_and_volunteers/councils/councils/#Industry
   c. Optica (Optical Society of America – previous name)

337) Invited interview with Laser Focus editor Peter Peter Fretty, Editor in Chief of LASER FOCUS WORLD, on the subject of Lightwave Logic, and the radical innovation needed by the optical network and internet.
   a. 3rd November 2022,
   b. Laser Focus world can be found at: https://www.laserfocusworld.com and the magazine at: https://www.laserfocusworld.com/magazine
   c. Laser Focus World

338) Invited panel moderator at PIC Summit Conference, Eindhoven, Netherlands in conjunction with IPSR-I workshops. Panel entitled, "Heterogeneous Intergration: Electronics and Photonics united" with companies that included: IMEC, LionX, VTT, Ligentec, Corning, Smart Photonics, Fraunhofer HHI
   a. 7th November 2022
   b. PIC Summit Europe conference. https://www.picsummiteurope.com/program/
   c. Located at the High Tech Center, Eindhoven, Netherlands

339) Invited speaker at PIC Summit Conference, Eindhoven, Netherlands in conjunction with IPSR conference to summarize panel findings and discussion with audience.
   a. 7th November 2022
   b. PIC Summit Europe conference. https://www.picsummiteurope.com/program/

Professor (Dr. Dr.) Michael S. Lebby, B. Eng. (Hons), MBA, Ph.D., D. Eng, Fellow NAI, IEEE, OSA; C. Eng.
1 Hawthorne St., unit 25a, San Francisco, CA 94105, USA; mobile +1 717 839 7078; drmlebby@gmail.com

c. Located at the High Tech Center, Eindhoven, Netherlands

340) Invited Speaker and chair of datacom group at the PIC Summit Europe Conference and IPSR-I workshops with sessions entitled, 'Paving the way to killer applications in 2035.'located at TU/e Eindhoven University, Netherlands. Workshop 1c: Datacom roadmap for 2023.
   a. 8th November 2022
   b. PIC Summit Europe conference and IPSR-I roadmap workshops. https://www.picsummiteurope.com/program/
   c. Located at the TU/e Eindhoven University, Netherlands.

341) Invited talk: IEEE IPC (Integrated Photonics Conference) https://ieee-ipc.org/industry-day/ as part of the conference https://ieee-ipc.org in the session Industry Day-Hot topics in industry. Talk entitled: "Enabling More Efficient Optical Networking using Ultra-high Speed, Ultra-low Power, Ultra-small Foundry based Polymer Modulators"
   a. 14th November 2022
   b. IEEE IPC IEEE IPC (Integrated Photonics Conference) https://ieee-ipc.org
   c. Located at the Hyatt Regency, Vancouver, BC, Canada.

342) Invited talk and panelist: IEEE IPC (Integrated Photonics Conference) https://ieee-ipc.org/industry-day/ as part of the conference https://ieee-ipc.org in the session Roundtable on Topics in Entrepreneurship. Talk entitled: "Entrepreneur or Intrapreneur" with company CEOs that included: OEwaves, Polariton, Freedom Photonics/Luminar, Aeponyx, Octane Wireless.
   a. 14th November 2022
   b. IEEE IPC IEEE IPC (Integrated Photonics Conference) https://ieee-ipc.org
   c. Located at the Hyatt Regency, Vancouver, BC, Canada.

343) Invited Video presentation: Ladenburg Thalmann Virtual Technology Expo conference 2022 entitled "Investor Presentation for Ladenburg Thalmann virtual Technology Expo Investor Presentation"
   a. Video-taped on 29th November 2022 for release on 7th December 2022
   b. For virtual attendees at the Thalmann Virtual Technology Expo conference 2022.
   c. Invited video presentation for virtual audience at 2022 Ladenburg Thalmann Virtual Technology Expo: https://ladenburgtech22.sequireevents.com/
   d. Presentation can be found at: https://ladenburgtech22.sequireevents.com/

344) Invited panelist: Photonics Spectra panel (virtual and recorded) titled, "Scaling PIC-based applications to volume production." Panelists included representatives from Sicoya, Polariton, and Ligentec, and hosted by Dr. Jose Pozo, CTO Optica.
   a. Recorded on 6th December 2022, for release 9-11th January 2023 (https://events.photonics.com/Event.aspx?EID=9&OC=EM)
   b. Details on the event can be found at: https://www.photonics.com/Advertise/MarketingBlog.aspx?AID=68312
   c. Hosted by Photonics Spectra (www.photonics.com)

345) Invited speaker at PhotonDelta's Delta Dialogues virtual interview entitled, "Heterogeneous Integration for PICs" on the summary and findings of PIC Summit

Professor (Dr. Dr.) Michael S. Lebby, B. Eng. (Hons), MBA, Ph.D., D. Eng, Fellow NAI, IEEE, OSA; C. Eng.
1 Hawthorne St., unit 25a, San Francisco, CA 94105, USA; mobile +1 717 839 7078; drmlebby@gmail.com

Europe conference on Heterogeneous Integration that took place in November 2022. The session was chaired by Jorn Smeets, PhotonDelta.

a. 7th December 6, 2022
b. Details of the event can be found at www.photondelta.com and https://www.photondelta.com/events/ and https://www.photondelta.com/events/delta-dialogues-december-2022/
c. Hosted by PhotonDelta www.photondelta.com

346) Invited Panelist: Ladenburg Thalmann Virtual Technology Expo conference and presentation can be found at: https://ladenburgtech22.sequireevents.com/

a. 7th December 2022
b. For virtual attendees at the Thalmann Virtual Technology Expo conference 2022.
c. Invited investor presentation at 2022 Ladenburg Thalmann Virtual Technology Expo: https://ladenburgtech22.sequireevents.com/

347) Invited Webinar and panelist: Roth Capital Partners at the 11th Annual Roth Deer Valley Conference, (https://www.roth.com/Page/Corporate-Access-Past-Conferences) with Lightwave Logic investor presentation and meetings.

a. 14-16th December 2022
b. 11th Annual Roth Deer Valley Conference
c. Financial investment conference for public company review. Panelist for answering questions by bankers, investment specialists, and fund managers on Lightwave Logic and its business plans, technology and plans for the future.

348) Invited reviewer for European Commission program as part of the IPCEI (Important Project of Common European Interest) program on electronics and photonics.

a. Duration of review process Jun 2022 to Dec 2022
b. IPCEI (Important Project of Common European Interest) based on public funding.
c. IPCEIs are projects by the EU commission that have the potential to make important contributions to sustainable economic growth, jobs, competitiveness and resilience for industry and the economy in the Union as well as strengthen its open strategic autonomy, by enabling breakthrough innovation and infrastructure projects through cross-border cooperation and with positive spill-over effects on the internal market and the society as a whole. In particular, semiconductor power FETs, laser diodes, amplifiers, FET technologies using both compound semiconductors (GaAs, GaN, InP) as well as silicon semiconductors (Silicon, SiGe) were reviewed.

2023

349)

Professor (Dr. Dr.) Michael S. Lebby, B. Eng. (Hons), MBA, Ph.D., D. Eng, Fellow NAI, IEEE, OSA; C. Eng.
1 Hawthorne St., unit 25a, San Francisco, CA 94105, USA; mobile +1 717 839 7078; drmlebby@gmail.com