US006879640B1

(12) **United States Patent**
Agazzi

(10) **Patent No.: US 6,879,640 B1**
(45) **Date of Patent: Apr. 12, 2005**

(54) **METHOD, APPARATUS AND SYSTEM FOR HIGH-SPEED TRANSMISSION ON FIBER OPTIC CHANNEL**

(75) Inventor: **Oscar E. Agazzi**, Irvine, CA (US)

(73) Assignee: **Broadcom Corporation**, Irvine, CA (US)

(*) Notice: Subject to any disclaimer, the term of this patent is extended or adjusted under 35 U.S.C. 154(b) by 618 days.

(21) Appl. No.: **09/693,709**

(22) Filed: **Oct. 20, 2000**

Related U.S. Application Data

(60) Provisional application No. 60/160,501, filed on Oct. 20, 1999.

(51) **Int. Cl.**[7] **H04L 27/04**

(52) **U.S. Cl.** **375/295**; 375/298; 375/308

(58) **Field of Search** 375/260, 261, 375/265, 279, 295, 298, 308

(56) **References Cited**

U.S. PATENT DOCUMENTS

4,613,975 A		9/1986	Aoyagi et al.	375/40
5,479,447 A		12/1995	Chow et al.	375/260
5,867,071 A	*	2/1999	Chethik	375/264
6,181,450 B1	*	1/2001	Dishman et al.	398/122
6,243,370 B1	*	6/2001	Schilling	375/130
6,271,953 B1	*	8/2001	Dishman et al.	398/129
6,362,903 B1	*	3/2002	Spickermann et al.	359/124

FOREIGN PATENT DOCUMENTS

EP	0 789 464	8/1997
EP	10107758	4/1998
EP	0 869 647	10/1998
EP	0 957 615	11/1999
GB	2 271 693	4/1994
WO	99/00926	1/1999

OTHER PUBLICATIONS

F. Ananasso et al., SS–FDMA Channelization and Routing in Advanced Multibeam Mobile Satellite Systems, XP–001004797, Oct. 1988, pp. 258–263.

An–Yeu Wu et al., A Fast algorithm for Reduced–Complexity Programmable DSP Implementation of the IFFT/FFT In DMT Systems, ISBN # 0–7803–4984–9, Aug., 1998, pp. 833–838.

Michel Alard et al., EBU Review—Technical, Principles of Modulation and Channel Coding for Digital Broadcasting for Mobile Receivers, No. 224, Aug., 1987, pp. 168–190.

(Continued)

Primary Examiner—Temesghen Ghebretinsae
(74) *Attorney, Agent, or Firm*—McAndrews, Held & Malloy, Ltd.

(57) **ABSTRACT**

Multi-carrier modulation fiber optic systems constructed using a series of electrical carriers, modulating the data on the electrical carriers and combining the carriers to form a wideband signal. The wideband signal can then be intensity modulated on a laser and coupled to a fiber optic channel. A receiver may then receive the laser signal from the fiber optic channel and convert it into an electrical signal. Multi-carrier modulation may be applied to existing fiber channels, which may be of lower quality. Existing fiber channels may have characteristics which prevent or restrict the transmission of data using intensity modulation at certain frequencies. An adaptive multi-carrier modulation transmitter may characterize an existing fiber optic channel and ascertain the overall characteristics of the channel. The transmitter and receiver can then be configured to use various bandwidths and various modulations in order to match the transfer characteristic of the fiber channel. A series of adaptive multi-carrier modulation transmitters and receivers can be integrated on a single integrated circuit. If multiple adaptive receivers and transmitters are integrated on a single integrated circuit, they may be used to upgrade existing networks by adding different wavelength lasers for the transmission of data in order to achieve any capacity desired. Each receiver and transmitter may characterize the fiber for its particular wavelength laser and may configure the modulation and bandpass to the fiber's characteristics.

12 Claims, 18 Drawing Sheets

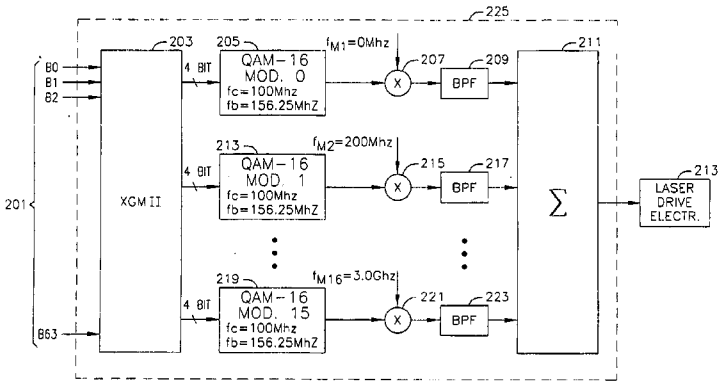

Nokia of America Corporation
IPR2023-00680, Ex. 1005
Ex. 1005.1

OTHER PUBLICATIONS

Thomas E. Darcie, Subcarrier Multiplexing for Lightwave Networks and Video Distribution Systems, IEEE Journal on Selected areas in Communications, vol. 8, No. 7, Sep. 1990, pp. 1240–1248.

Norio Kanno, et al., Fiber–Optic Subcarrier Multiplexing Video Transport Employing Multilevel QAM, IEEE Journal on Selected Areas in Communications, vol. 8, No. 7, Sep. 1990, pp. 1313–1319.

Robert Olshansky, et al., Subcarrier Multiplexed Lightwave Systems for Broad Band Distribution, IEEE Journal of Lightwave Technology, vol. 7, No. 9, Sep. 1989, pp. 1329–1341.

John A. C. Bingham, Multicarrier Modulation for Data Transmission: An Idea Whose Time Has Come, IEEE Communications Magazine, pp. 5–14.

Jack H. Winters, et al. Reducing the Effects of Transmission Impairments in Digital Fiber Optic Systems, IEEE Communications Magazine, Jun. 1993, pp. 68–76.

B. L. Kasper, Equalization of Multimode Optical Fiber Systems, The Bell System Technical Journal, vol. 61, No. 7, Sep. 1982, pp. 1367–1388.

Jack H. Winters, et al., Electrical Signal Processing Techniques in Long–Haul Fiber–Optic Systems, IEEE Transactions on Communications, vol. 38, No. 9, Sep. 1990, pp. 1439–1453.

M. Guizani and A.R. Al–Ali, "PC–Compatible Optical Data Acquisition Unit," 1994 Instrumentation and Measurement Technology Conference, May 10–12, 1994.

N. Kanno and K. Ito, "Fiber–Optic Subcarrier Multiplexing video Transport Employing Multilevel QAM," IEEE Journal on Selected Areas in Communications, vol. 8, No. 7, Sep. 1990.

W. Ellersick, C.K. Yang, M. Horowitz, and W. Dally, "GAD: A 12GS/s CMOS 4–bit A/D Converter for an Equalized Multi–Level Link," 1999 Symposium on VLSI Circuits.

W.J. Dally and J. Poulton, "Transmitter Equalization for 4Gb/s Signalling," Proceedings of Hot Interconnects IV, Palo Alto, 1996.

J.H. Winters, R.D. Gitlin, and S. Kasturia, "Reducing the Effects of Transmission Impairments in Digital Fiber Optic Systems," IEEE Communications Magazine, Jun. 1993, pp. 68–76.

S. Kasturia and J.H. Winters, "Techniques for High–Speed Implementation of Nonlinear Cancellation," IEEE Journal on Selected Areas in Communications, vol. 9, No. 5, Jun. 1991.

B.L. Kasper, "Equalization of Multimode Optical Fiber Systems," Bell System Technical Journal, vol. 61, No. 7, Sep. 1982, pp. 1367.

J.H. Winters and R.D. Gitlin, "Electrical Signal Processing Techniques in Long–Haul Fiber–Optic Systems," IEEE Transactions on Communications, vol. 38, No. 9, Sep. 1990, pp. 1439–1453.

R. Mason and J.T. Taylor, "High–Speed Electro–Optic Analogue to Digital Converters," 1993 International Symposium on Circuits and Systems, May 3–6, 1993.

T.E. Darcie, "Subcarrier Multiplexing for Lightwave Networks and Video Distribution Systems," IEEE Journal on Selected Areas in Communications, vol. 8, No. 7, Sep. 1990.

J.A.C. Bingham; Multicarrier Modulation for Data Transmission: An Idea Whose time Has Come, IEEE Communications Magazine, May 1990, pp. 5–14.

R. Olshansky, V.A. Lanzisera, P.M. Hill, "Subcarrier Multiplexed Lightwave Systems for Broadband Distribution," Journal of Lightwave Technology, vol. 7, No. 9, Sep. 1989.

* cited by examiner

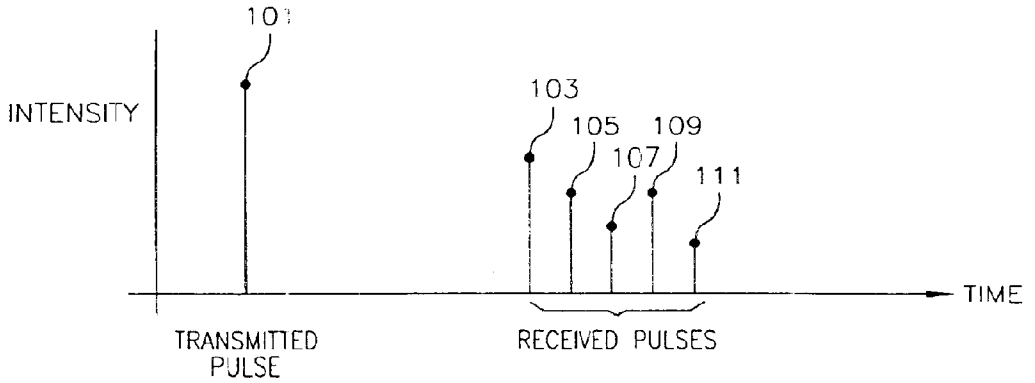
101
INTENSITY
103
105
109
107
111
TIME
TRANSMITTED PULSE
RECEIVED PULSES

FIG. 1A

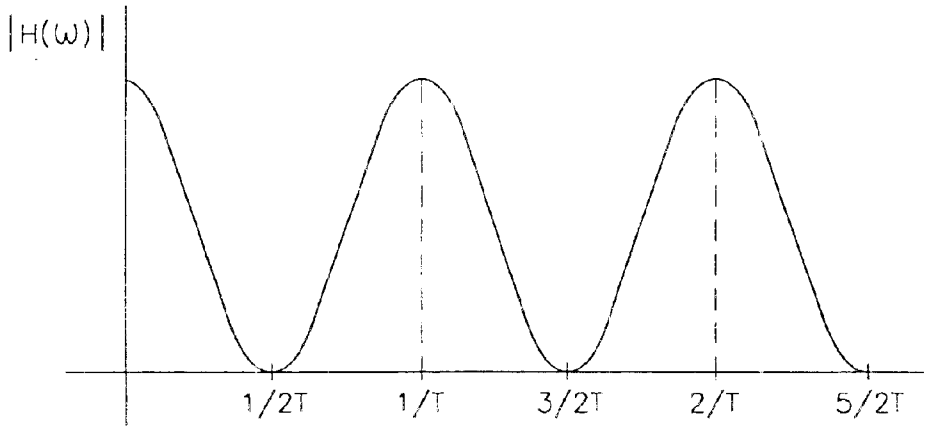
|H(ω)|
1/2T
1/T
3/2T
2/T
5/2T

FIG. 1B

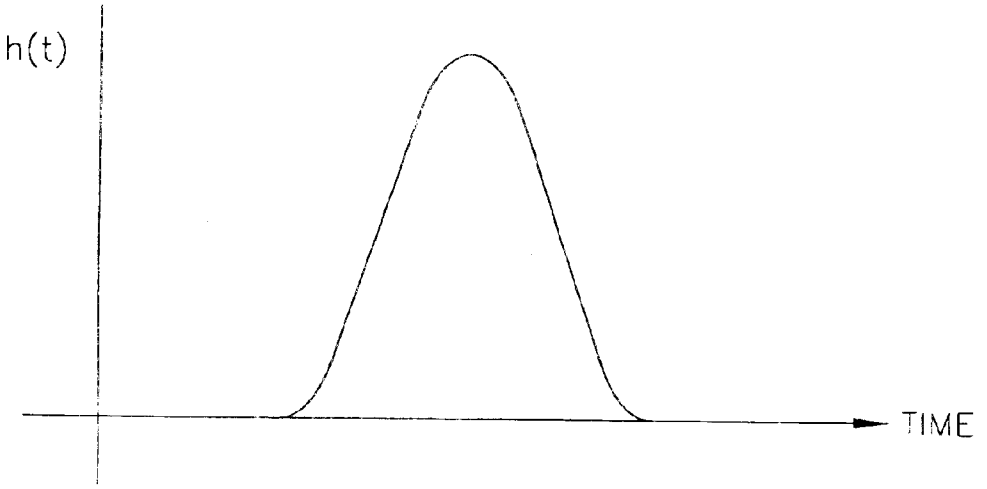

FIG. 1C

DATA IN
121
DATA PROCESSING
123
OPTICAL TRANSMITTER
125
127
OPTICAL RECEIVER
129
DATA PROCESSING
DATA OUT

FIG. 1D

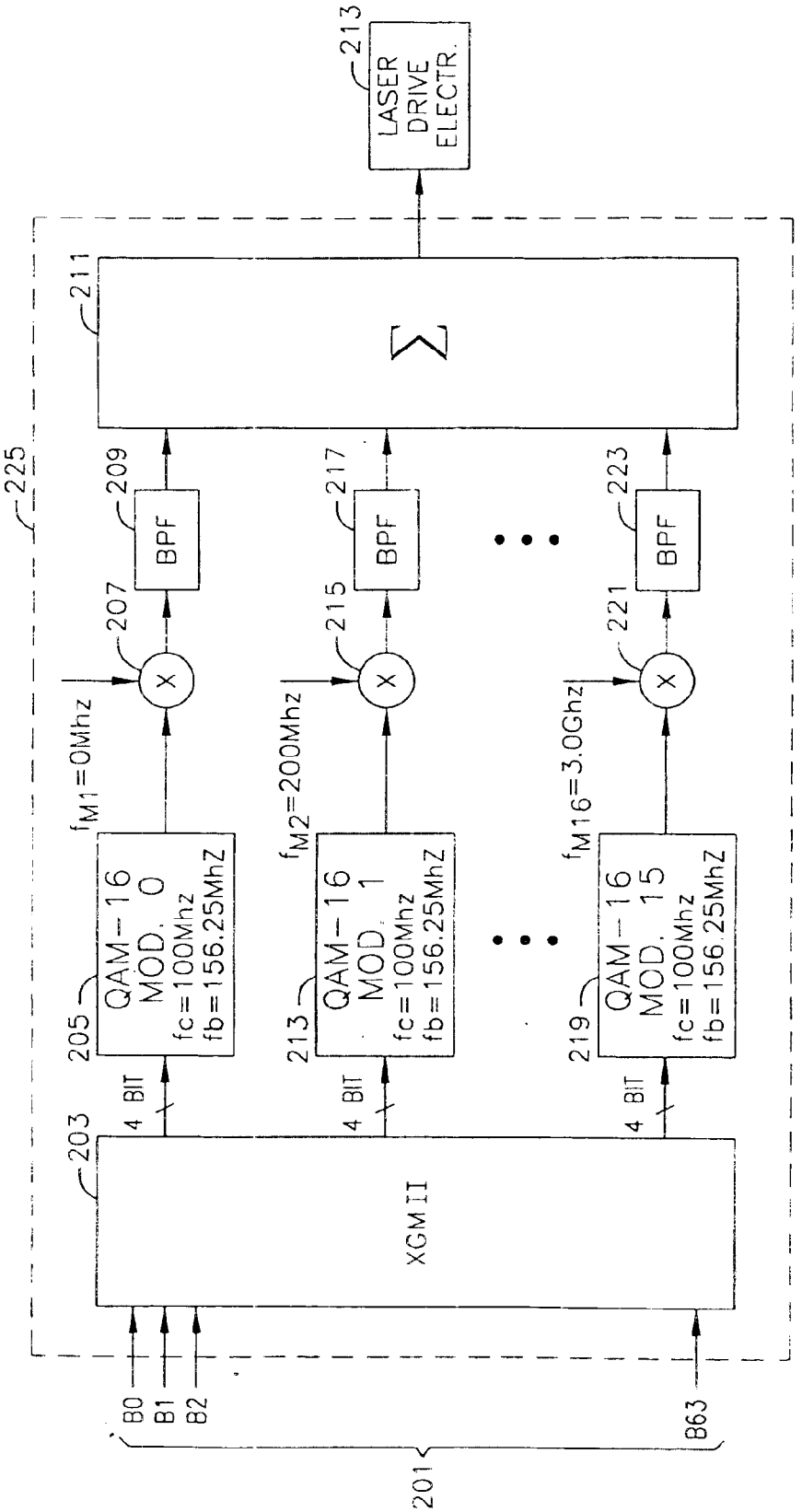
LASER DRIVE ELECTR.
213
211
Σ
225
209
BPF
217
BPF
223
BPF
207
215
221
X
X
X
f_{M1}=0Mhz
f_{M2}=200Mhz
f_{M16}=3.0Ghz
QAM-16 MOD. 0 fc=100Mhz fb=156.25MhZ
205
QAM-16 MOD. 1 fc=100Mhz fb=156.25MhZ
213
QAM-16 MOD. 15 fc=100Mhz fb=156.25MhZ
219
4 BIT
4 BIT
4 BIT
203
XGMII
B0
B1
B2
B63
201

FIG. 2A

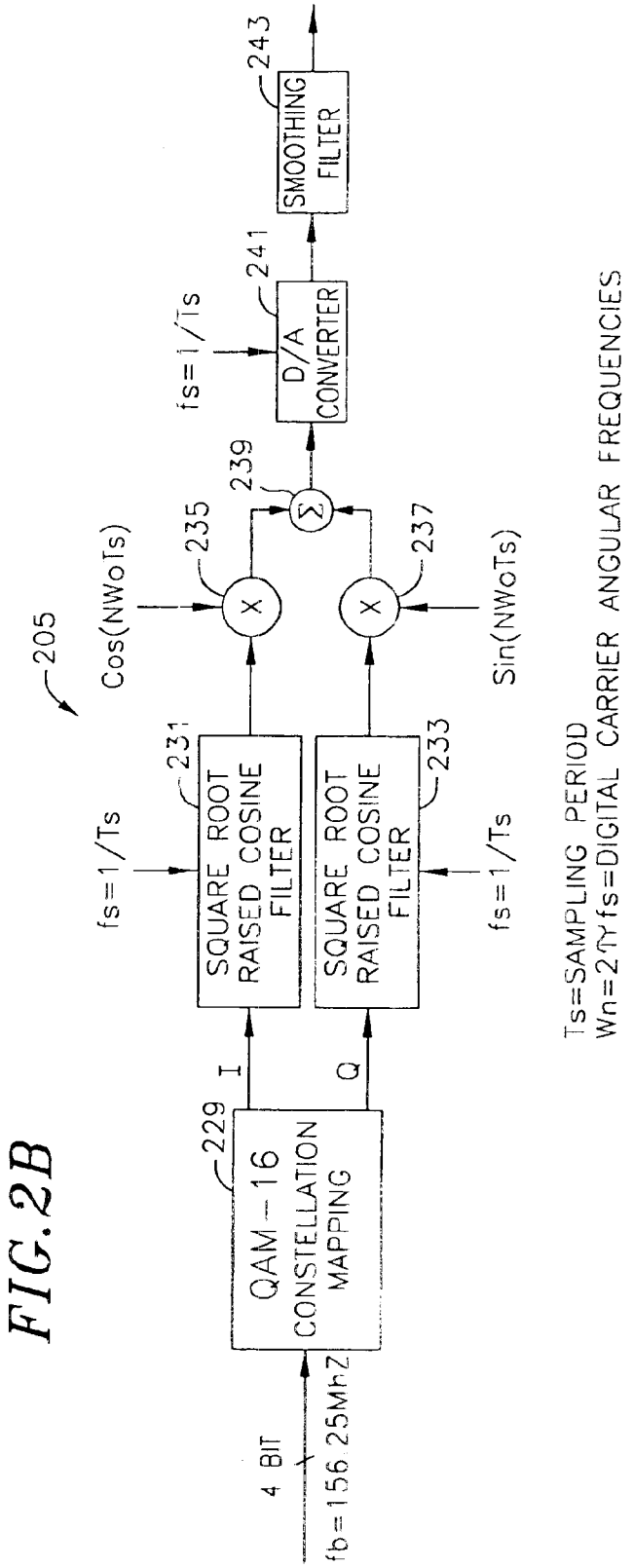
205
4 BIT
fb=156.25MhZ
229
QAM-16
CONSTELLATION
MAPPING
I
Q
fs=1/Ts
231
SQUARE ROOT
RAISED COSINE
FILTER
233
SQUARE ROOT
RAISED COSINE
FILTER
fs=1/Ts
Cos(NWoTs)
235
237
Sin(NWoTs)
239
Σ
fs=1/Ts
241
D/A
CONVERTER
243
SMOOTHING
FILTER
Ts=SAMPLING PERIOD
Wn=2πfs=DIGITAL CARRIER ANGULAR FREQUENCIES

FIG.2B

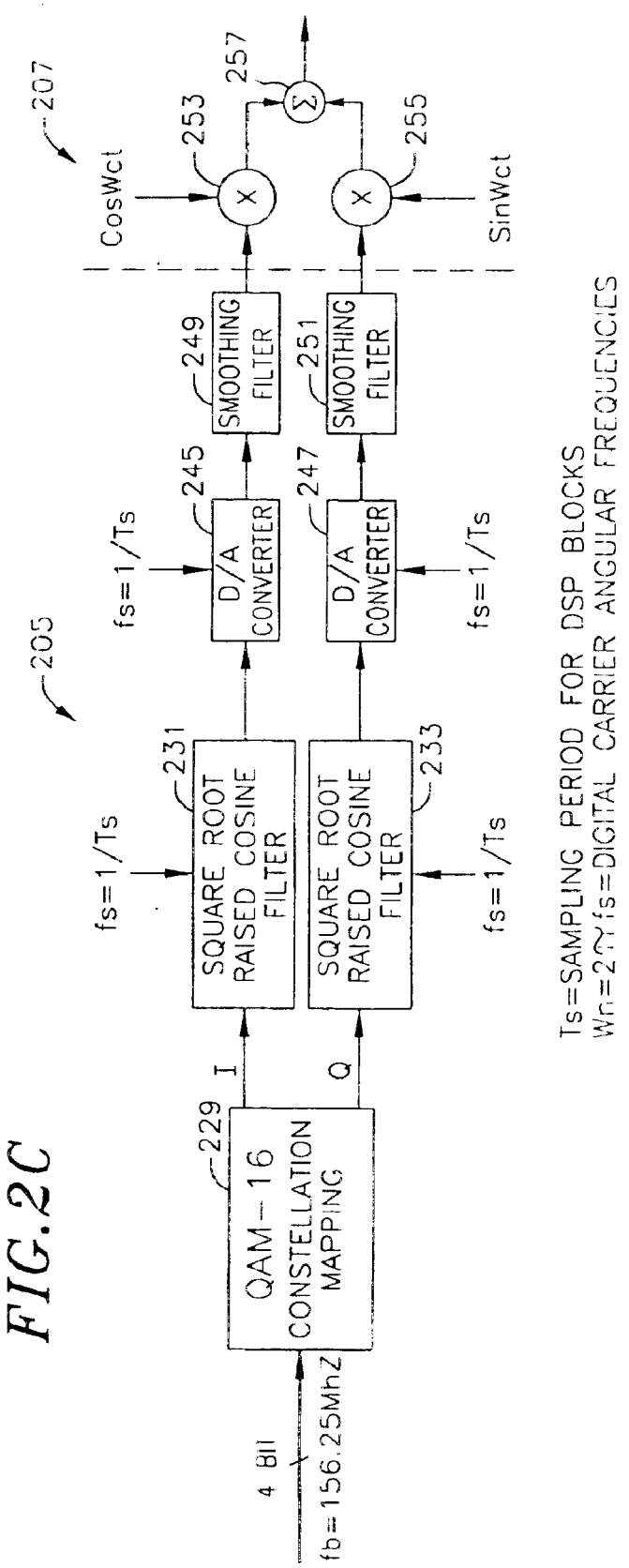
207
205
4 Bit
fb=156.25Mhz
QAM-16 CONSTELLATION MAPPING
229
I
Q
fs=1/Ts
SQUARE ROOT RAISED COSINE FILTER
231
SQUARE ROOT RAISED COSINE FILTER
233
fs=1/Ts
D/A CONVERTER
245
D/A CONVERTER
247
fs=1/Ts
SMOOTHING FILTER
249
SMOOTHING FILTER
251
CosWct
SinWct
253
255
257
Ts=SAMPLING PERIOD FOR DSP BLOCKS
Wn=2π fs=DIGITAL CARRIER ANGULAR FREQUENCIES

FIG.2C

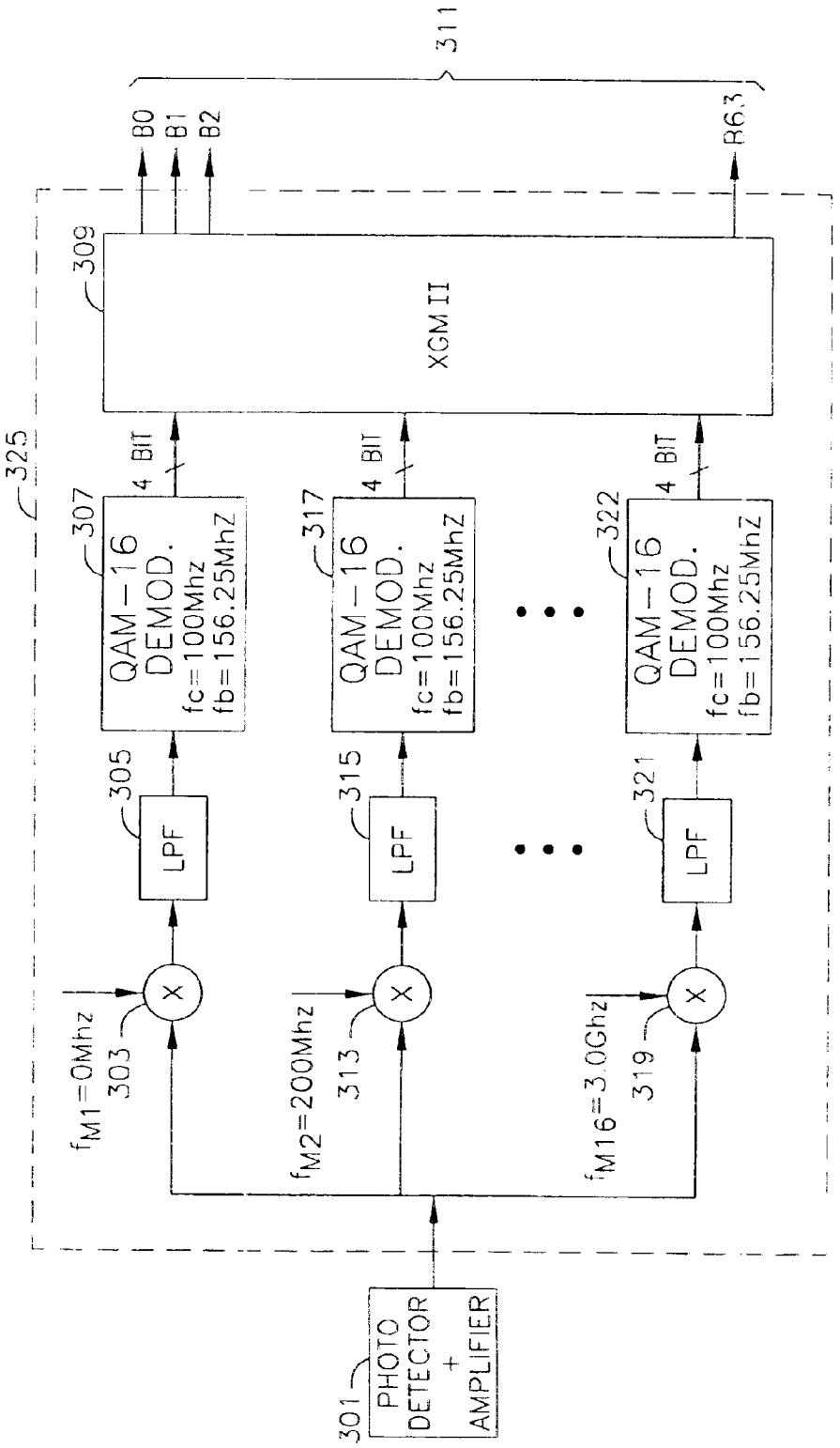
311
B0
B1
B2
B63
309
XGM II
325
4 BIT
4 BIT
4 BIT
307
QAM-16
DEMOD.
fc=100Mhz
fb=156.25MhZ
317
QAM-16
DEMOD.
fc=100Mhz
fb=156.25MhZ
322
QAM-16
DEMOD.
fc=100Mhz
fb=156.25MhZ
305
LPF
315
LPF
321
LPF
f_{M1}=0Mhz
303
f_{M2}=200Mhz
313
f_{M16}=3.0Ghz
319
301
PHOTO
DETECTOR
+
AMPLIFIER

FIG. 3

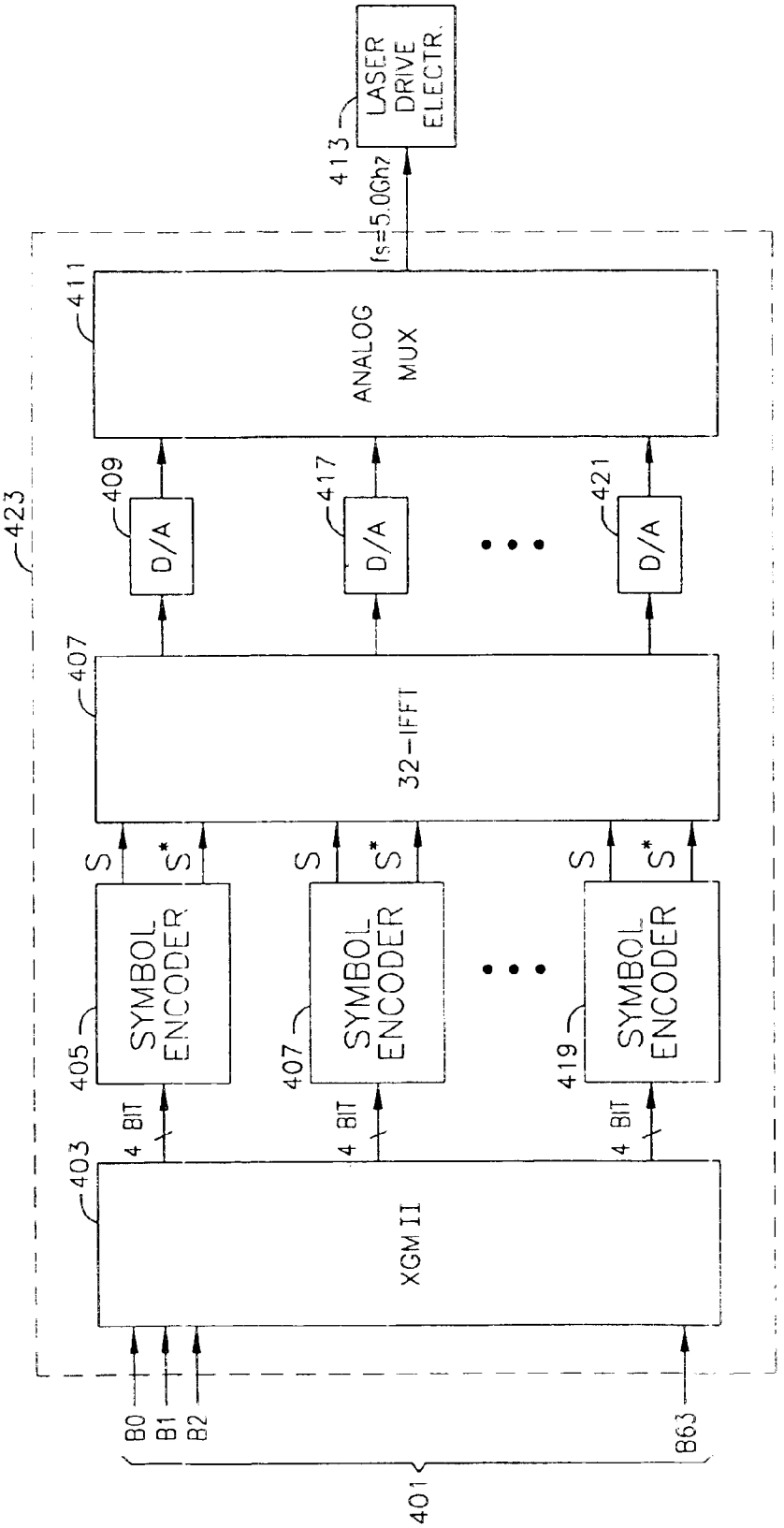
LASER DRIVE ELECTR.
413
fs=5.0Ghz
411
ANALOG MUX
423
409
D/A
417
D/A
421
D/A
407
32-IFFT
S
S*
SYMBOL ENCODER
405
407
419
4 BIT
403
XGM II
B0
B1
B2
B63
401

FIG. 4

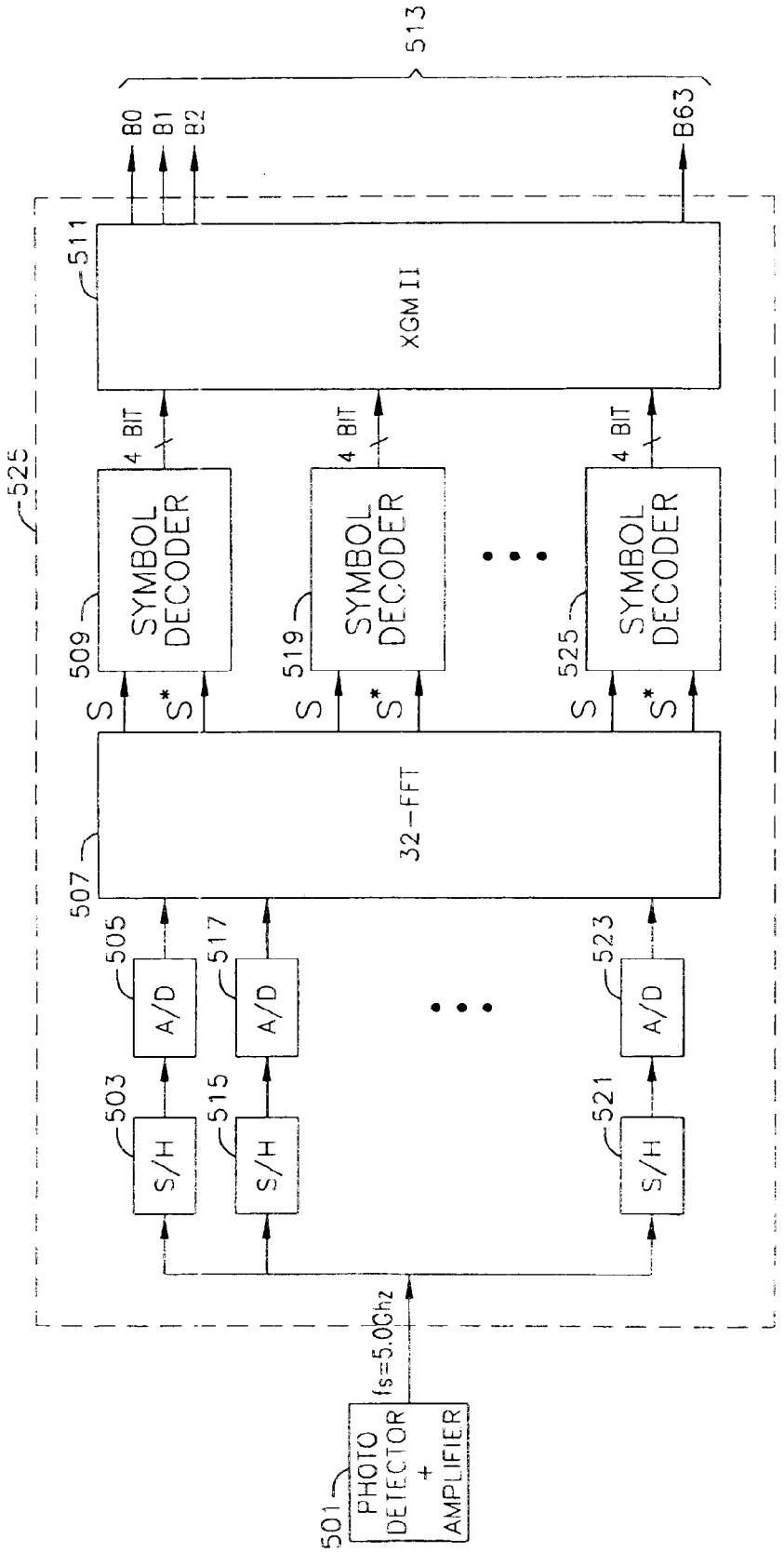
513
B0
B1
B2
B63
511
XGM II
525
4 BIT
4 BIT
4 BIT
509
SYMBOL DECODER
519
SYMBOL DECODER
525
SYMBOL DECODER
S
S*
S
S*
S
S*
507
32-FFT
505
A/D
517
A/D
523
A/D
503
S/H
515
S/H
521
S/H
fs=5.0Ghz
501
PHOTO DETECTOR + AMPLIFIER

FIG. 5

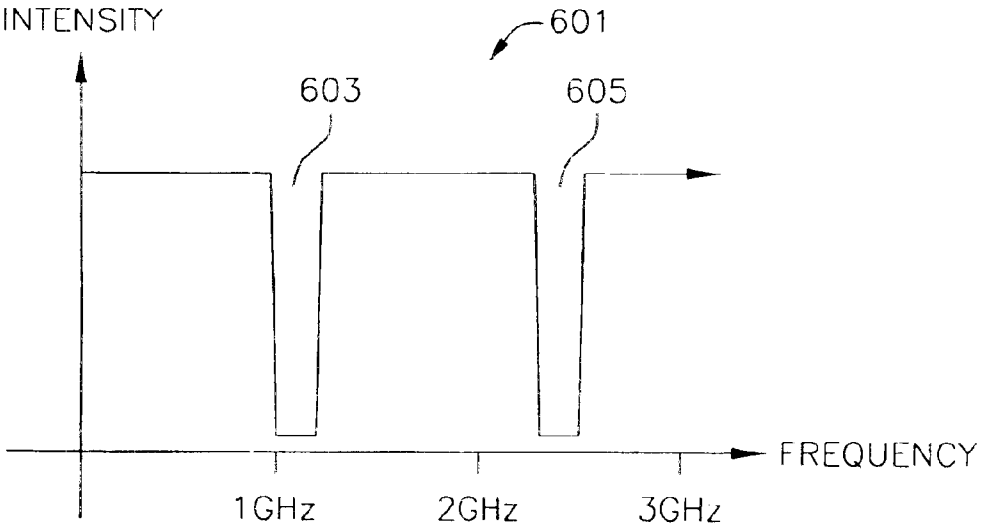

FIG. 6

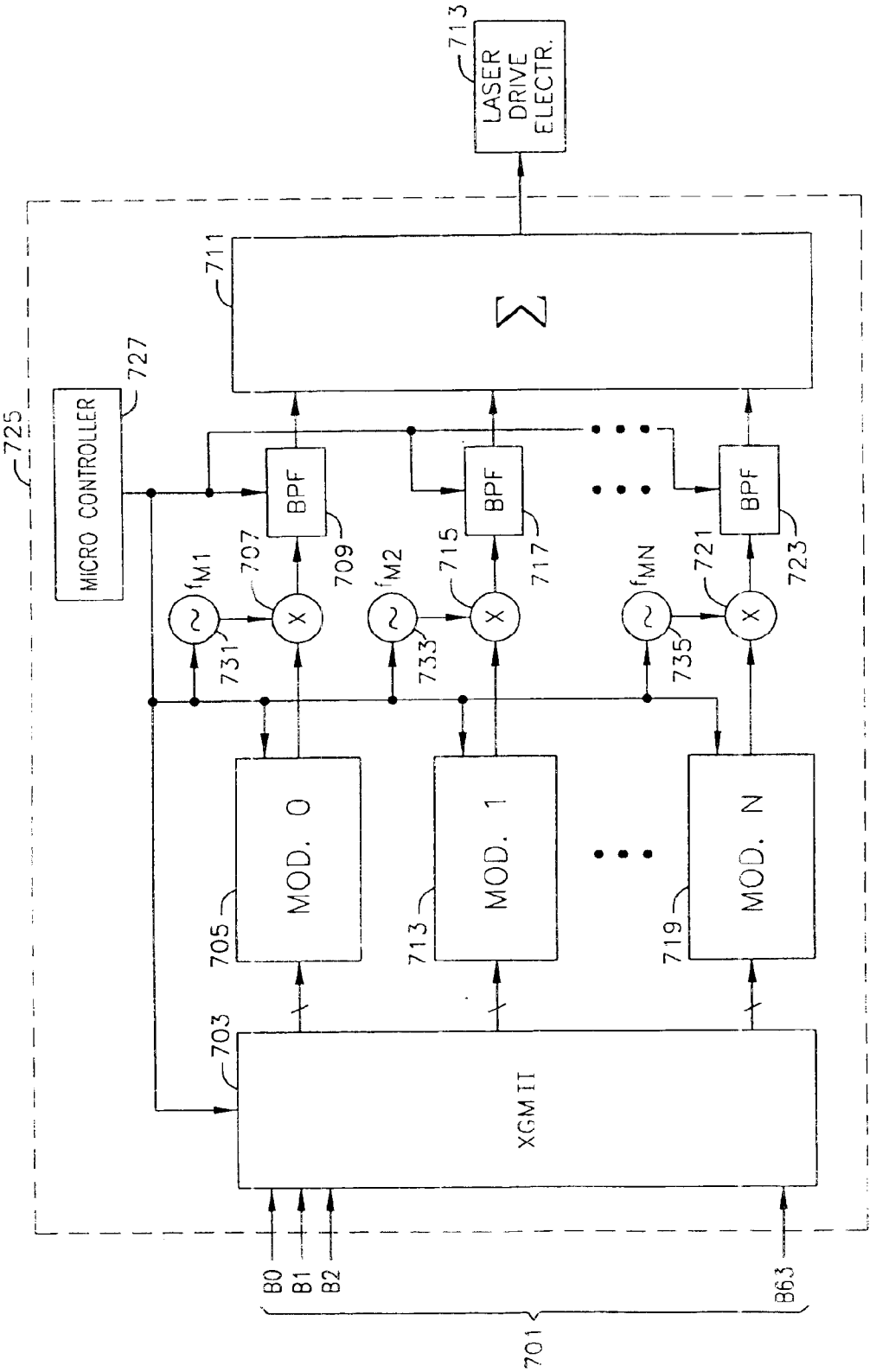
LASER DRIVE ELECTR.
713
711
Σ
MICRO CONTROLLER
727
725
BPF
BPF
BPF
707
709
715
717
721
723
f_{M1}
f_{M2}
f_{MN}
731
733
735
X
X
X
MOD. 0
MOD. 1
MOD. N
705
713
719
703
XGMII
B0
B1
B2
B63
701

FIG. 7A

FIG. 7B

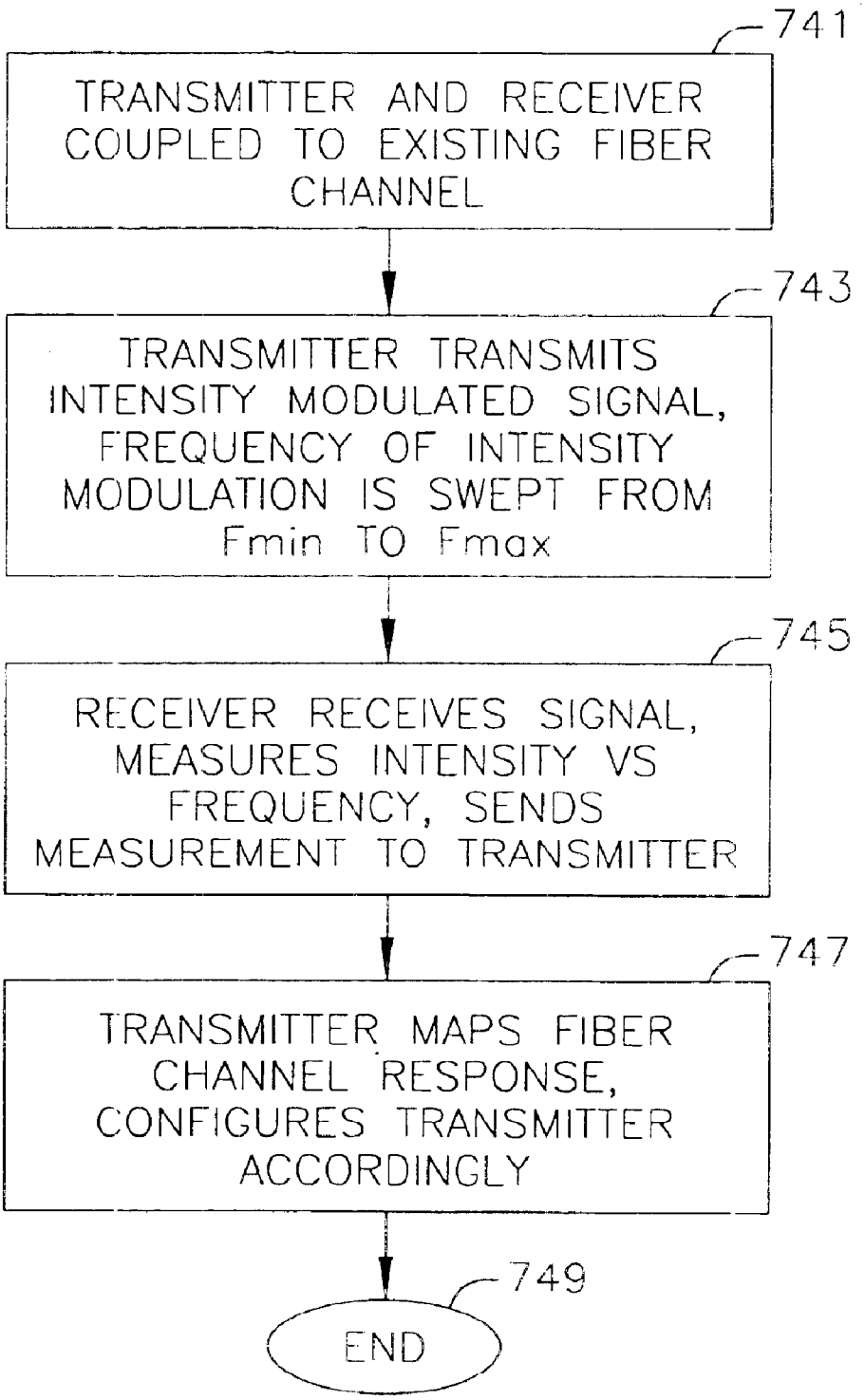
741
TRANSMITTER AND RECEIVER COUPLED TO EXISTING FIBER CHANNEL
743
TRANSMITTER TRANSMITS INTENSITY MODULATED SIGNAL, FREQUENCY OF INTENSITY MODULATION IS SWEPT FROM Fmin TO Fmax
745
RECEIVER RECEIVES SIGNAL, MEASURES INTENSITY VS FREQUENCY, SENDS MEASUREMENT TO TRANSMITTER
747
TRANSMITTER MAPS FIBER CHANNEL RESPONSE, CONFIGURES TRANSMITTER ACCORDINGLY
749
END

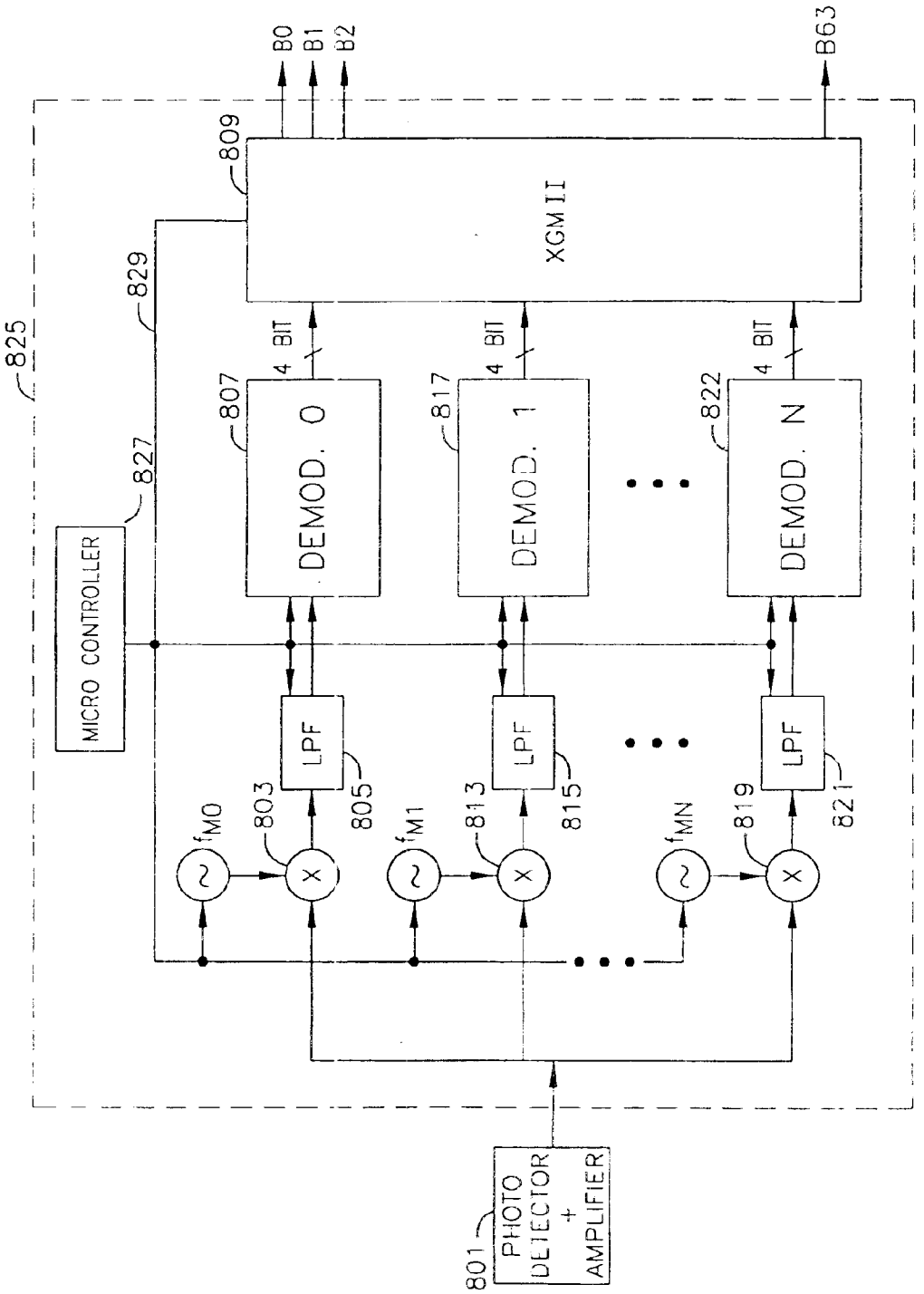
825
MICRO CONTROLLER
827
829
809
XGM II
B0
B1
B2
B63
4 BIT
4 BIT
4 BIT
807
DEMOD. 0
817
DEMOD. 1
822
DEMOD. N
LPF
805
LPF
815
LPF
821
803
813
819
fM0
fM1
fMN
801
PHOTO DETECTOR + AMPLIFIER

FIG. 8

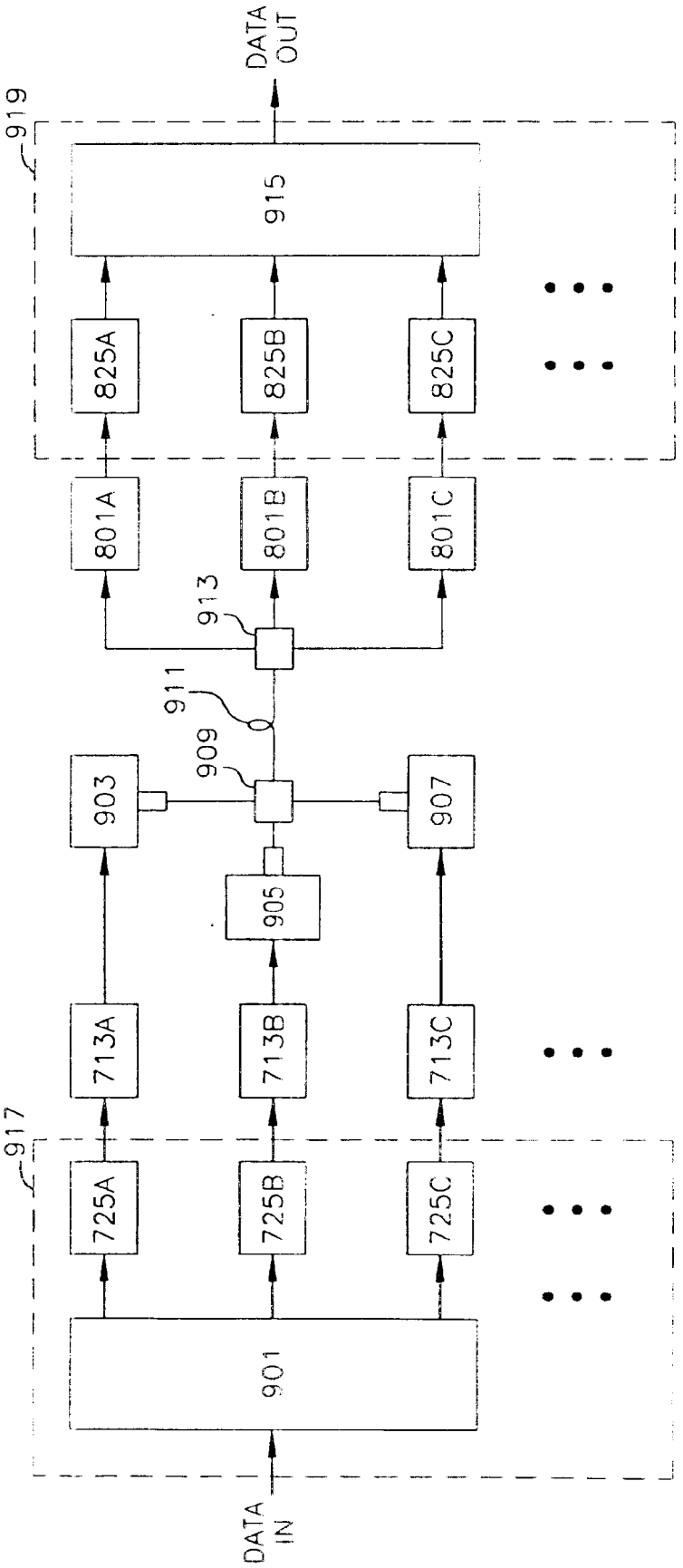
DATA IN
917
901
725A
725B
725C
713A
713B
713C
905
903
907
909
911
913
801A
801B
801C
825A
825B
825C
915
919
DATA OUT

FIG. 9

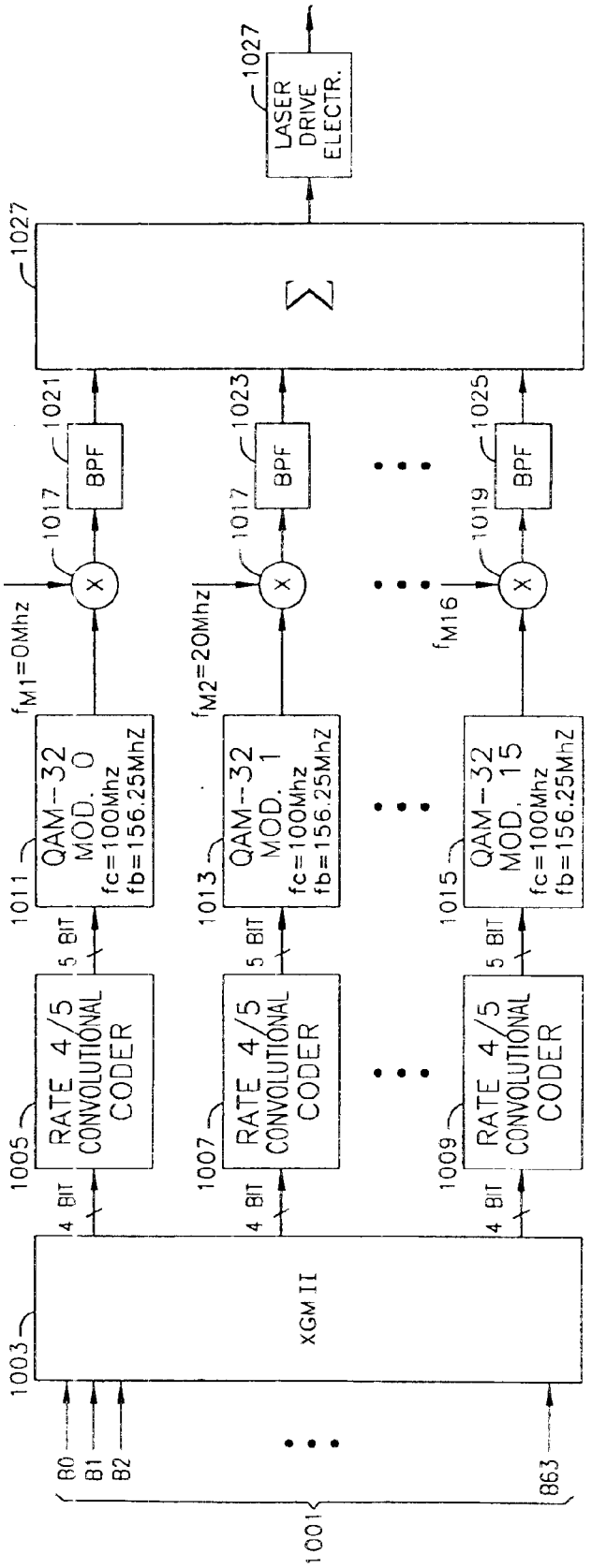
1001
B0
B1
B2
B63
1003
XGM II
4 BIT
1005
RATE 4/5 CONVOLUTIONAL CODER
1007
RATE 4/5 CONVOLUTIONAL CODER
1009
RATE 4/5 CONVOLUTIONAL CODER
5 BIT
1011
QAM-32 MOD. 0 fc=100Mhz fb=156.25MhZ
1013
QAM-32 MOD. 1 fc=100Mhz fb=156.25MhZ
1015
QAM-32 MOD. 15 fc=100Mhz fb=156.25MhZ
f_{M1}=0Mhz
f_{M2}=20Mhz
f_{M16}
1017
1019
BPF
1021
1023
1025
1027
Σ
LASER DRIVE ELECTR.

FIG. 10

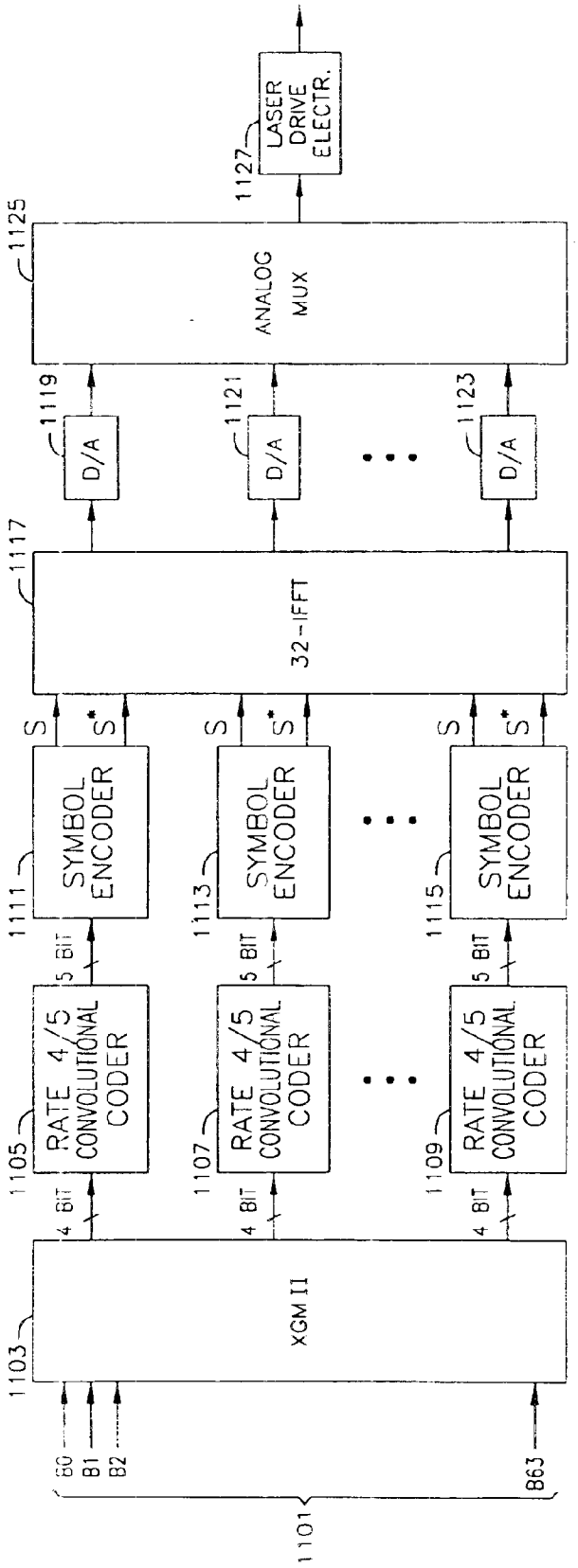
1101
B0
B1
B2
B63
1103
XGM II
4 BIT
1105
RATE 4/5 CONVOLUTIONAL CODER
1107
RATE 4/5 CONVOLUTIONAL CODER
1109
RATE 4/5 CONVOLUTIONAL CODER
5 BIT
1111
SYMBOL ENCODER
1113
SYMBOL ENCODER
1115
SYMBOL ENCODER
S
S*
1117
32-IFFT
1119
D/A
1121
D/A
1123
D/A
1125
ANALOG MUX
1127
LASER DRIVE ELECTR.

FIG. 11

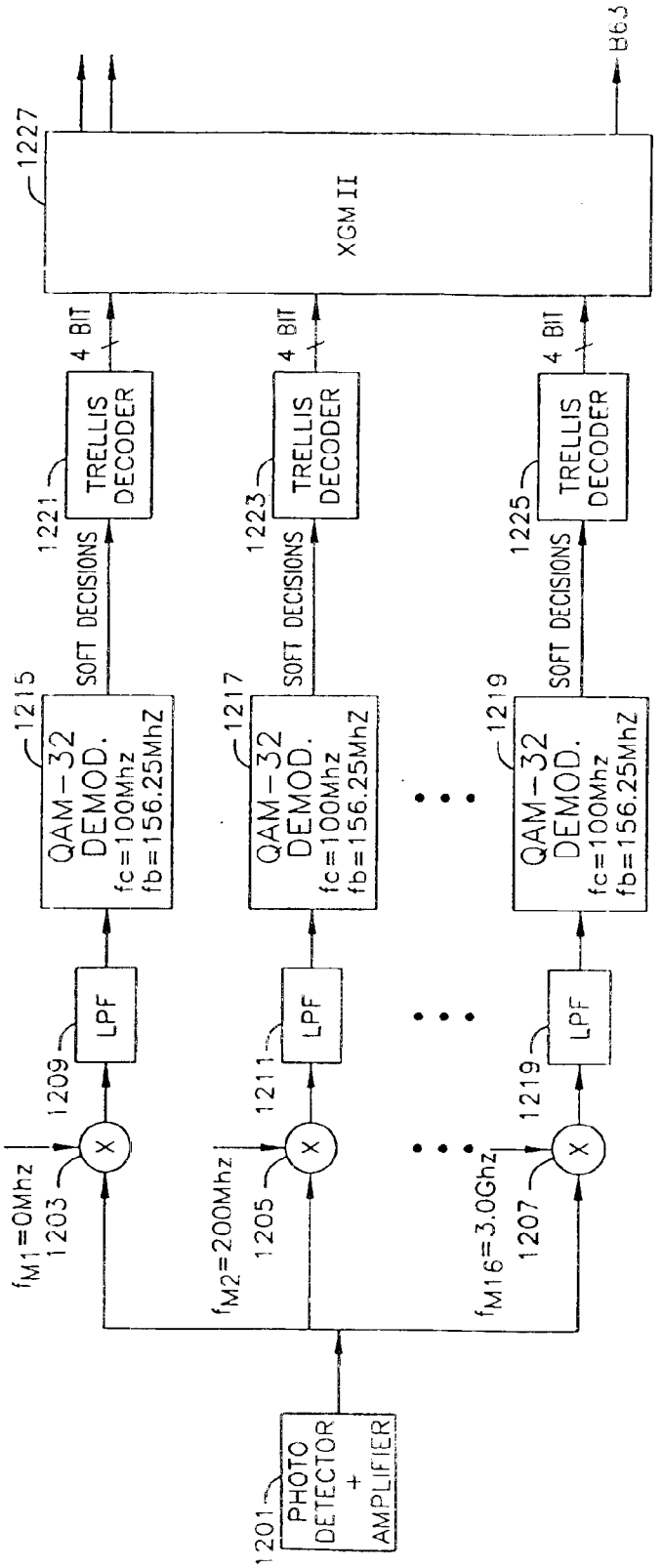
1201
PHOTO DETECTOR + AMPLIFIER
f_{M1}=0Mhz
1203
f_{M2}=200Mhz
1205
f_{M16}=3.0Ghz
1207
1209
1211
1219
LPF
1215
1217
1219
QAM-32 DEMOD. fc=100Mhz fb=156.25MhZ
SOFT DECISIONS
1221
1223
1225
TRELLIS DECODER
4 BIT
1227
XGM II

FIG. 12

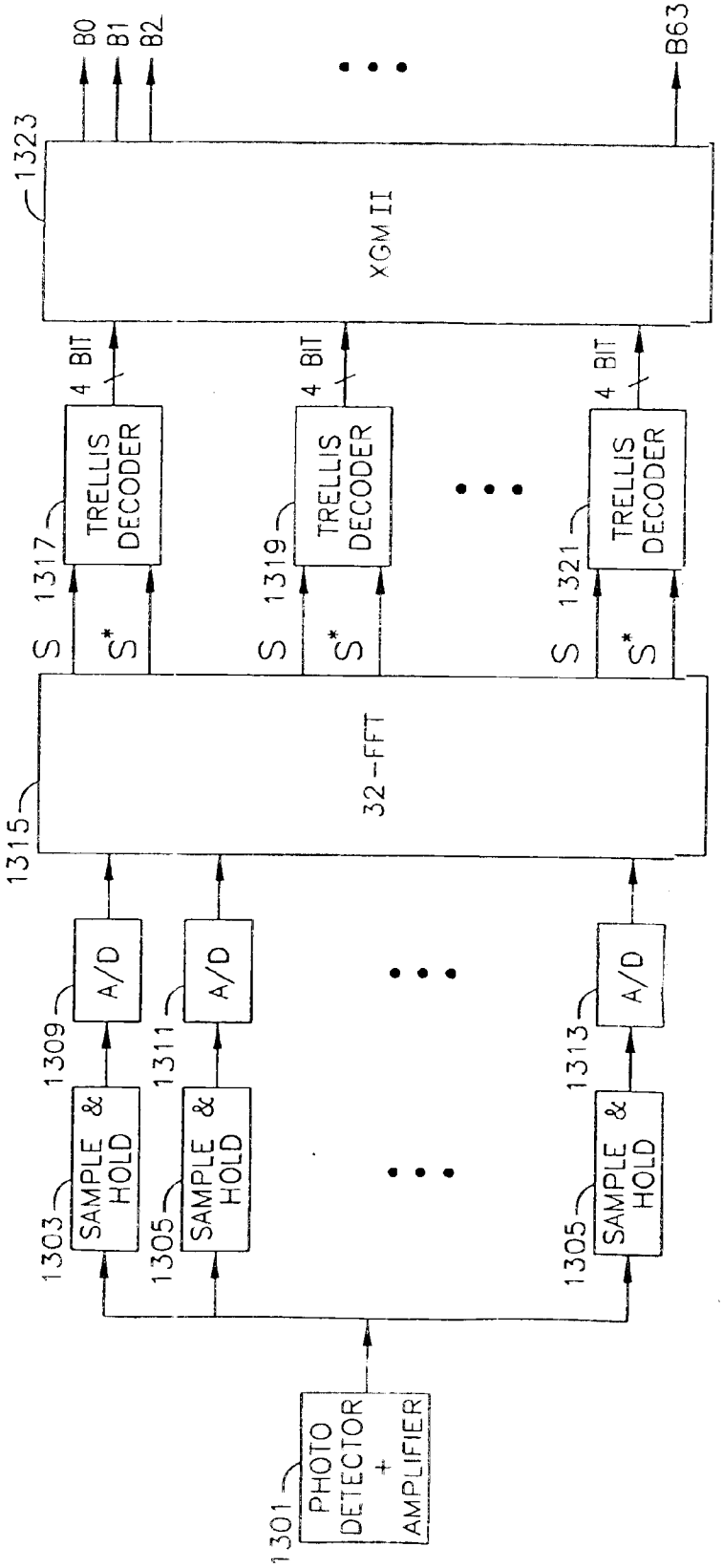
1301
PHOTO DETECTOR + AMPLIFIER
1303
SAMPLE & HOLD
1305
SAMPLE & HOLD
1305
SAMPLE & HOLD
1309
A/D
1311
A/D
1313
A/D
1315
32-FFT
S
S*
S
S*
S
S*
1317
TRELLIS DECODER
1319
TRELLIS DECODER
1321
TRELLIS DECODER
4 BIT
4 BIT
4 BIT
1323
XGM II
B0
B1
B2
B63

FIG. 13

METHOD, APPARATUS AND SYSTEM FOR HIGH-SPEED TRANSMISSION ON FIBER OPTIC CHANNEL

PRIORITY

This application claims the benefit from provisional application 60/160,501 filed on Oct. 20, 1999.

INCORPORATION BY REFERENCE

This application incorporates the content of the application "FULLY INTEGRATED TUNER ARCHITECTURE" filed on Nov. 12, 1999, Ser. No. 09/439,101.

FIELD OF THE INVENTION

The present invention relates to methods and apparatus for the transfer of high rates of data over a fiber optic channels, and in particular embodiments to methods and apparatus which utilize existing fiber optics systems to achieve high data transfer rates.

BACKGROUND OF THE INVENTION

The amount of data carried on fiber optic systems continues to increase. The IEEE (Institute of Electrical and Electronics Engineers) 802.3ae task force is currently working on the definition of a 10 gigabit per second standard for Ethernet applications. Although optical transmission at 10 gigabits per second is possible with current technology, the price of obtaining a 10 gigabit per second data rate may currently be very high because of the necessity of using costly optical components.

Inexpensive optical components, such as fibers and lasers, may result in optical channels with limited bandwith, nulls, significant noise, distortion and multi-mode transmission characteristics. These characteristics may be problematical when attempting to achieve high data rates. Additionally, some of the fiber systems already in place comprise fibers and components of lower quality than are currently available in modern fiber optic systems. The characteristics of these systems may also be problematical when attempting to increase the transmission rates over such systems. There is therefore a need in the art to improve transmission capability of lower quality fiber optic systems through the use of inexpensive electronics. There is also a need for the use of channel coding and bandwidth efficient modulation techniques to overcome the limitations of low quality optical channels and result in higher transmission rates and reduced system costs.

SUMMARY OF THE INVENTION

Apparatuses for transmitting and receiving data on a fiber channel are disclosed. An example transmitting apparatus comprises an input that receives a digital signal to be transmitted. The apparatus also comprises a plurality of programmable modulators each configured to accept a portion of the digital signal to be transmitted, and to modulate the portion of the digital signal accepted. The modulators communicate with a plurality of mixers, each mixer coupled to the output of one of the programmable modulators to accept a modulated signal and mix it with a mixer frequency. The mixed frequencies are then coupled into a plurality of bandpass filters that filter the output of the mixers. A summation unit then combines the output of the mixers into a single signal.

An example receiving apparatus comprises an input that receives a transmitted optical signal and converts it into an electrical signal. The receiving apparatus also comprises a plurality of programmable mixers which accept the received electrical signal. The mixers are coupled to programmable frequency sources. The mixed frequencies are then coupled into a plurality of bandpass filters that filter the output of the mixers. The filtered signals are then provided to programmable demodulators, which will demodulate the signal according to the modulation used by the transmit apparatus. The demodulated signals are then provided to a XGMII (Ten Gigabit Media Independent Interface), which combines the demodulated signals into a parallel bit stream.

BRIEF DESCRIPTION OF THE DRAWINGS

The following descriptions refer to drawings in which consistent numbers refer to like elements throughout.

FIG. **1**A is a graphical illustration showing a light pulse transmitted through a multimode fiber optic channel and resulting received pulses.

FIG. **1**B is a graph of an exemplary frequency response of the optical channel exhibiting nulls.

FIG. **1**C is a graph illustrating the impulse response of a multimode fiber channel in an "overfilled launch conditions."

FIG. **1**D is a block diagram of an exemplary fiber optic data transmission system.

FIG. **2**A is a block diagram of a multi-carrier modulation (MCM) transmitter.

FIG. **2**B is a block diagram of a digital implementation of a QAM-16 modulator, such as illustrated in FIG. **2**A.

FIG. **2**C is a block diagram of an analog implementation of a QAM-16 modulator, such as illustrated in FIG. **2**A.

FIG. **3** is a block diagram illustrating a multi-carrier modulation receiver.

FIG. **4** is a block diagram of an alternate implementation of a multi-carrier modulation transmitter.

FIG. **5** is a block diagram of an alternate implementation of multi-carrier modulation receiver as may be used the alternative implementation of the MCM transmitter illustrated in FIG. **4**.

FIG. **6** is a graph of intensity vs. frequency representing the transfer function of an exemplary fiber optic channel.

FIG. **7**A is a block diagram of a circuit implementation as may be used with fiber channels exhibiting nulls and/or noisy bands.

FIG. **7**B is a flow diagram illustrating the process by which an existing fiber channel may be characterized.

FIG. **8** is a block diagram of a receiver as may be used with the transmitter illustrated in FIG. **7**A.

FIG. **9** is a block diagram illustrating the use of a set of multi-carrier modulation transmitters and multi-carrier modulation receivers in parallel in order to increase the data-carrying capacity of a channel.

FIG. **10** is a block diagram illustrating a modification of the transmitter of FIG. **2**A to incorporate trellis coding.

FIG. **11** is a block diagram illustrating a modification of the alternate transmitter of FIG. **4** to incorporate trellis coding.

FIG. **12** is a block diagram illustrating a modification of the receiver of FIG. **3** to receive a trellis coded signal.

FIG. **13** is a block diagram illustrating a modification of the receiver of FIG. **4** to receive a trellis coded signal.

DETAILED DESCRIPTION OF THE INVENTION

Optical communications systems may achieve very high data rates as a result of the high bandwidth of the optical

fibers and the availability of high-speed lasers and photo detectors, as well as wideband laser drivers, transimpedance amplifiers, postamplifiers, and clock and data recovery circuits. However there is a demand for ever increasing speed in communications, and technology is rapidly approaching a point where the optical fiber can no longer be treated as having unlimited bandwidth. This is particularly true for the case of multimode fibers, which may exhibit lower data carrying capacity due to the multimode nature of the fiber. Some modern optical communications systems may be limited in their speed by the bandwidth of the optical fibers.

Bandwidth efficient communications systems have been developed over several decades in the context of narrowband communications, such as voiceband modems and digital subscriber loops. These systems make use of techniques such as multilevel Pulse Amplitude Modulation (PAM) or Quadrature Amplitude Modulation (QAM) to encode several bits per transmitted symbol, thus increasing the effective transmitted data rate without increasing the symbol rate or the required bandwidth of the communication channel. To make the most efficient use possible of the available channel bandwidth, channel equalization techniques may also be used to compensate pulse dispersion and the resulting inter-symbol interference caused by the frequency-dependent attenuation and phase distortion introduced by the channel. Channel coding and coded modulation further increases bandwidth efficiency by allowing the communication system to operate at lower signal to noise ratios. For a fixed amount of noise in the channel, the ability to operate at reduced signal to noise ratios implies that the number of bits encoded in each symbol can be increased, resulting in higher bandwidth efficiency. The use of bandwidth efficient modulation techniques has resulted in practical communication systems that approach the Shannon bound for channel capacity. However so far these bandwidth efficient communications systems have been implemented at relatively low data rates, since they require complex signal processing techniques that are very difficult to implement at high speed.

In general bandwidth efficient modulation techniques have not been applied to fiber optic systems. This is so partly because the optical fibers provide so much bandwidth that, in many applications, it is unnecessary to use bandwidth efficient modulation techniques. Additionally, it has been difficult to implement bandwidth efficient modulation techniques at the data rates normally used in optical communications systems. Accordingly many optical communication systems have been based, with a few exceptions, on simple bandwidth inefficient modulation techniques. With the increasing demand for high speed communications systems, however, as the bandwidth demands increase, optical communications are reaching a point where bandwidth efficient modulation techniques will be needed. Thus the problem of how to implement complex digital signal processing (DSP) and coding algorithms at high speed needs to be solved. Furthermore, a highly cost effective way to implement these complex algorithms is in a single monolithic chip or a chip set consisting of a small number of chips, for example in CMOS (Complementary Metal Oxide Semiconductor) technology. In order to reduce cost, it is desirable to reduce as much as possible the complexity of the optical processing, even at the expense of greatly increasing the complexity of the electronic and DSP functions. As an example, it is desirable whenever possible, to replace wavelength division multiplexing (WDM) techniques, which commonly incorporate several laser light sources, by modulation, coding, and signal processing techniques that provide the same data rate over a single optical carrier. By utilizing a single optical carrier the need for optical multiplexers and demultiplexers, as well as the plurality of lasers and photodetectors inherent in WDM techniques may be eliminated.

It is also desirable to replace optical equalization techniques by DSP-based equalization techniques, in order to take advantage of electronic components which are generally less expensive than their optical counterparts . Furthermore, it is desirable to achieve high levels of chip integration, which requires that all analog processing functions, such as amplifiers, mixers, analog filters and data converters be integrated in a single chip or a small chip set. The use of techniques that lend themselves well to VLSI (Very Large Scale Integration), is highly desirable.

Commonly data rates of optical communications systems may exceed the maximum clock speeds of the digital signal processors that can be implemented in current VLSI technologies. Accordingly to process the higher data rates available in optical fibers parallel processing architectures may be employed. In general, parallel processing architectures reduce the required processing speed by partitioning computations into a set of subcomputations. The subcomputations may then be executed in parallel by assigning a separate processor to each subcomputation. Accordingly, the implementation of high-speed algorithms in a transceiver may be accomplished by an array of processors running at reduced clock speed executing tasks in parallel. To exploit the parallelism of an array of processors signal processing algorithms should be of such a nature that they may be partitioned into a number of subcomputations to be executed by the parallel processors present in the array.

An important consideration in parallizing the computations is that the computational load of the different processors be balanced, in order to avoid bottlenecks that may result when one processor has a significantly increased processing load as compared to the other processors in the array. Not all signal processing algorithms lend themselves well to a parallel processing implementation, therefore the choice of modulation, equalization and coding algorithms must be made with the requirement of parallel processing implementation in mind.

One aspect of the present disclosure is that it may provide bandwidth efficient modulation techniques that can be applied to optical communications channels in general. These disclosed techniques may be found to be particularly advantageous in channels whose bandwidth is limited, for example as a result of the use of multimode fibers.

A further aspect of the present disclosure is in providing techniques that enable the implementation of these bandwidth efficient modulation algorithms at high speed and in the form of a single monolithic chip or a chip set consisting of a small number of chips, for example in CMOS technology.

The present disclosure also describes modulation, equalization, coding, and data conversion algorithms and architectures that lend themselves well to parallel processing implementations which may enable the reducing the clock speed of VLSI implementations. Further useful aspects of this disclosure will become apparent upon reading and understanding the present specification. Optical channels based on intensity modulation and direct detection are inherently nonlinear. This is because the modulated quantity is the optical power rather than the electromagnetic field. The principle of superposition applies to the electromagnetic field, as a result of the linear nature of Maxwell's equations. Superposition does not directly apply to the optical power.

However, it has been shown that under certain very general conditions, the intensity-modulated optical channel behaves approximately linearly, and the principle of superposition can be applied. This linear approximation of an optical channel is commonly referred to as the "quasi-linear approximation". The conditions under which the "quasi-linear approximation" is valid have been analyzed in the article "Baseband Linearity and Equalization in Fiber Optic Digital Communication Systems", by S. D.Personick, appearing in the Bell System Technical Journal, Vol.52, No.7, September 1973, pages 1175–1194. Nonlinear distortion may occur in an optical channel when the conditions for the validity of the quasi-linear approximation do not hold. Furthermore, nonlinearities in the transmitter coupled to the fiber channel (such as laser or drive electronics nonlinearities) may introduce an additional source of nonlinearity even if the quasi-linear approximation holds.

In the following discussion we assume that the quasi-linear approximation holds, and treat the optical channel as linear.

Another impairment that can exist in an optical channel is dispersion. This is a linear effect. There are different sources of dispersion in optical fibers. One type of dispersion is chromatic dispersion, caused by the dependence of the index of refraction on the wavelength of the light. If the laser is not perfectly monochromatic (as commonly happens in practice), light components of different wavelengths travel at different speeds, causing dispersion of the transmitted pulses. Commonly chromatic dispersion is small and it causes problems only in long haul optical links. Another type of dispersion is the multimode dispersion, which exists in multimode fibers. The source of this type of dispersion is that different optical fiber modes propagate at different velocities. A transmitted pulse splits its energy among many different modes. Since the light pulse carried by each mode travels at different speed, the receiver observes multiple replicas of the transmitted pulse, arriving at different times, as shown in FIG. **1**A .

FIG. **1**A is a graphical illustration showing a light pulse transmitted through a multimode fiber optic channel and the resulting received pulses. Pulse **101** is transmitted. Because pulse **101** travels through multiple modes in the fiber at different speeds pulses **103**, **105**, **107**, **109** and **111** are received at the receiver. If the fiber attenuation is very small and can be neglected, the sum of the energies of all the received pulses equals the energy of the transmitted pulse. In practice, since the fiber has a nonzero attenuation, the sum of the energies of all received pulses will be less than the energy of the transmitted pulse.

As a simplified example, suppose that the transmitted pulse splits its energy equally into only two modes. Also, suppose that, as a result of the different propagation velocities of the two modes, these pulses arrive at the receiver with a time separation T, and they suffer zero loss. Then if the energy of the transmitted pulse is 1 (in arbitrary units) the two received pulses have energy 0.5 (in the same arbitrary units). Neglecting the propagation delay of the line, the impulse response of the fiber is:

$$0.5\ \delta(t)+0{:}5\ \delta(t-T) \qquad \text{Equation(1)}$$

where δ(t) is the Dirac delta function. The Fourier transform of this impulse response is the frequency response of the optical channel, and it is given by:

$$H(\omega)=\exp(-j\omega T/2)\cos(\omega T/2) \qquad \text{Equation(2)}$$

FIG. **1**B is a graph of the magnitude of the Equation(2) function. It is clear that this frequency response exhibits nulls at all odd multiples of (½T). This example illustrates how multimode transmission can give rise to nulls in the frequency response of the fiber. In practice multimode fiber propagates many modes, typically more than one thousand. This multimode propagation may result in rather complex impulse and frequency responses. The impulse and frequency responses are also dependent on the way the laser light is coupled to the fiber. If all modes of the fiber are excited equally, it is said that the channel is operating in "overfilled launch" conditions. This results in an impulse response that closely approximates a Gaussian function, as shown in FIG. **1**C, which is a graph illustrating the response of a multimode fiber channel to an "overfilled launch."

The analytic expression for the impulse response illustrated in FIG. **1**C is:

$$h(t)=1/((\sqrt{2\pi})\alpha T)\exp(-t^2/2(\alpha T)^2) \qquad \text{Eqn.(3)}$$

Where a is a fiber dependant parameter. The corresponding frequency response is given by:

$$H(f)=\exp(-(2\pi\alpha Tf)^2/2) \qquad \text{Equation(4)}$$

H(f) is also a Gaussian function, so in the case of overfilled launch conditions, the frequency response does not exhibit nulls. The 3 dB optical bandwidth is:

$$B=0.1874/(\alpha T) \qquad \text{Equation(5)}$$

This is called the "overfilled bandwidth" of the multimode fiber. The overfilled bandwidth of a fiber depends on the core diameter and refraction index profile of the fiber as a function of the radius, the fiber length, and the wavelength of the laser, among other things. The bandwidth is inversely proportional to the length of the fiber, so that the product of the bandwidth times length a constant for a given type of fiber and a given laser wavelength. For example, typical fibers in widespread use today have an overfilled bandwidth of 500 MHz·Km at a wavelength of 1310 nm, and 160 MHz·Km at a wavelength of 850 nm.

A number of alternative launch techniques such as offset launch and vortex launch have been developed in order to excite a reduced number of fiber modes. These techniques could result in increased bandwidth, but the impulse response could also show multiple peaks, as in the example of FIG. **1**A. This kind of impulse response usually results in a frequency response with nulls similar to the ones shown in FIG. **1**B, but with a more complicated structure. The exact shape of the frequency and impulse responses is a complicated function of the fiber characteristics and the launch conditions.

Various methods of transferring data over a fiber optic channel are known in the art. Multi-carrier modulation or MCM is one method of communicating over a fiber optic channel. In MCM, multiple carriers at different frequencies are modulated with data. The modulated carriers are then summed and the sum signal is used to modulate a laser, for example, by modulating the intensity of the laser beam.

Multi-carrier modulation systems may also be adapted for use in legacy fiber channels, which may have nulls and noisy frequency bands. Multi-channel modulators, according to embodiments of the present invention may have variable modulations and carrier frequencies. The variable modulations and carrier frequencies of MCM may be selectively chosen in order to accommodate nulls, noisy frequency bands, and other transmission impediments of existing and/or low quality channels. Nulls and noisy frequency bands can be determined in an existing channel, for example, by introducing a test signal and measuring the received result.

Multi-channel modulators may also be used, in parallel, in order to upgrade existing fiber channels to virtually any capacity desired. To upgrade the capacity of existing fiber channels, multiple MCMs may be added in parallel using multiple lasers having different wavelengths. Because each laser may have its own response within the channel, each channel may undergo an initialization, in which a test signal is used to determine the frequency characteristics of the channel at that particular laser wavelength.

Existing fiber channels may be upgraded into any data-carrying capacity desired by simply adding more MCMs and multiple lasers, having different wavelengths, in parallel until the desired data-carrying capacity is achieved.

FIG. **1**D is a block diagram of an exemplary fiber optic data transmission system. Digital data is coupled into a data processing block **101**. Data processing block **121** processes the input data and prepares it for the optical transmitter **123**. The optical transmitter **123** transmits the data across a fiber optic channel **125**. The optical receiver **107** accepts the data from the fiber optic channel **125** and then couples it into a data processing module **129**. The data from the optical receiver **107** is processed in the data processing module **129** and then provided to the application, which will receive data.

The blocks within the block diagram of FIG. **1**D may have a variety of possible implementations. For example, in a bit serial approach, the data processing block **121** may accept data and convert the data into a serial bit stream. The optical transmitter **123** may then accept the serial bit stream from the data processing block **121** and transmit as a serial type on/off keying (OOK) signal. In on/off keying a laser within the optical transmitter block **123** is ideally turned on and off depending on whether the data that is received from the data processing block **121** is a one or zero.

In practice, the laser is never turned off completely, because the turn-on time of typical lasers is relatively long, therefore the repeated turn-on transients would degrade the speed of the optical transmission system. Instead the optical power is switched between a high value (representing a discrete logic level such as a "1") and a low value (representing a discrete logic level such as a "0"). The ratio of the high to low optical power is commonly called the "extinction ratio." The laser may also be switched between several intensity levels in order to represent symbols from a logical alphabet.

For the purposes of simplifying this disclosure when two levels of optical power are transmitted the high and low levels may be referred to as on and off optical pulses, but it should be understood that an "off" pulse will typically carry a non zero amount of optical power.

In an exemplary fiber optic system according to FIG. **1**, data is conveyed as a series of on/off optical pulses from the optical transmitter **123** through the fiber **125** to the optical receiver **127**. The optical receiver **127** will then provide the on/off data stream to the data processing module **129**. The data processing module will then convert the serial on/off stream to a data output, for example, in a parallel type format.

The blocks in FIG. **1**D may also be configured in a Wavelength Division Multiplexing (WDM) approach. Wavelength division multiplexing approaches are, in general, divided into dense and coarse WDM, commonly referred to as DWDM and CWDM respectively. The wavelength division multiplexing technique employs multiple optical carriers, which are modulated by a data stream. The dense version of wavelength division multiplexing generally comprises laser carriers whose wavelengths differ by less than one nanometer. Coarse wavelength division multiplexing generally comprises laser carriers whose wavelengths differ by ten nanometers or more. Dense wavelength division multiplexing systems have been created with, for example, up to 100 different wavelengths. Such systems are expensive. A major contributing factor to the expense of wavelength division multiplexing systems is the multiple optical sources for the different wavelengths, which carry the data from the transmitter to the receiver. Additionally the expense of combining the multiple optical carriers, in WDM systems, adds to their cost. Additionally, once the data carriers arrive at the optical receiver **127** they commonly must then be optically split, in order to retrieve the data streams from the individual optical carriers.

It is desirable, from a cost standpoint, to employ a single optical transmitter **123** and a single optic receiver **127** if possible. It is also desirable that the optical transmitter **123** and optical receiver **127** be as simple as possible and any processing accomplished in the electronic data processing blocks **121** and **129**. In a preferred embodiment of the present invention, data processing block **121** as well as data processing block **129** comprise a single integrated circuit each. By transferring all functions except those used for the actual optical transmission into, for example, a CMOS (Complementary Metal Oxide Semiconductor) integrated circuit, a low cost implementation of the transmit side of the system in FIG. **1** can be realized. Likewise, if the optical receiver **127** is restricted to those components needed for optical reception and all other functions are performed within the data processing block **129**, (for example a CMOS integrated circuit), the costs for the received portion of this circuitry of FIG. **1** can be minimized. Once such embodiment of a multi-carrier modulation transmitter, which can be integrated into a single CMOS circuit, is illustrated in FIG. **2**.

FIG. **2**A is a block diagram of a multi-carrier modulation transmitter. The illustrative MCM transmitter of FIG. **2**A has a capacity of 10 gigabits/second. In FIG. **2**, 64 bits of data **201** are coupled into a XGMII (Ten Gigabit Media Independent Interface) module **203**. The XGMII is shown as providing a 64 bit input or output at a clock rate of 156.25 MHz. In reality the XGMII interface operates on 32 bits at a time, and is clocked on both the rising and the falling edges of the 156.25 MHz clock. A complete description of the XGMII interface is given in the presentation "10 Gig MII Update" by H. Frazier, presented at thee IEEE 802.3 High Speed Study Group Plenary meeting in Kauai, Hi, on Nov. 9, 1999. A copy of this presentation can be obtained from the IEEE 802.3 web site, at:

http://grouper.ieee.org/groups/802/3/10G_study/public/nov99/frazier_1_1199.pdf.

Other system interfaces besides the XGMII have been under consideration by the IEEES02.3ae Task Force, and will likely be included in the standard. One important alternative interface is the XAUI interface, described in the document:

http://grouper.ieee.org/groups/802/3/ae/public/may00/taborek_2_0500.pdf

Those skilled in the art will recognize that the interfaces illustrated within this disclosure are by way of example and are chosen as examples likely to be familiar to those skilled in the art. Other interfaces may also be used. The uses of the exemplary interfaces within this disclosure are in no way meant to limit the inventive concepts to those interfaces and serve the purpose of illustration and example only.

The 64 bits are then divided into four bit nibbles and further provided to the modulators. Modulator zero, **205** is

a QAM-**16** (Quadrature Amplitude Modulation) module. The QAM-**16** module **205** accepts four bits of data from the XGMII module **203**. The frequency that is mixed with the output of the QAM-**16** modulator in mixer **207** is zero megahertz. After the mixing stage **207**, the signal is bandpass filtered in block **209** to remove any undesirable components. The filtered signal is then coupled into a combiner **211**. Similarly, the second four bits from the module **203** are coupled into QAM modulator **213**. The output of the QAM-**16** modulator **213** is coupled into a mixer **215** where it is mixed with a 200 megahertz signal. The resultant signal is then bandpass filtered, in bandpass filter **217**, and coupled into the combiner **211**. The signals which are coupled into the combiner **211** from bandpass filter **217**, occupies a frequency bandwidth from 200 megahertz to 356.25 megahertz. Each mixer within the exemplary multi-carrier modulation block diagram illustrated in FIG. **2** has a frequency which is separated from successive mixer frequency by 200 megahertz. In such a way by having the bandpass less than the separation of mixing frequencies may minimize the crosstalk between the modulators.

In the final stage, four bits are coupled from the XGMII modulator **203** into the final QAM-**16** modulator **219**. The frequency of modulation, which is coupled into mixer **221**, is 3.0 gigahertz. The output of mixer **221** is then coupled into bandpass filter **223** to remove any unwanted components. The filtered signal is then coupled from the bandpass filter **223** into the combiner **211**. The combiner **211** combines all the modulated frequency bands into a single frequency spectrum. The frequency spectrum signal is then further coupled to laser drive electronics **213**. The output of the laser drive electronics **213**, is an intensity modulated signal corresponding to the combination of all 16 modulators. All of the electronics illustrated in FIG. **2** and encompassed within the dotted line **225** may be integrated into a single integrated circuit, for example a CMOS integrated circuit chip. By integrating all the electronics within the block **225** on a single chip, the system cost may be reduced. By placing as much of the processing as possible within the integrated circuit **225**, costs of assembly, alignment and multiple optical parts may be greatly reduced.

FIG. **2**B is a block diagram of a digital implementation of a QAM-**16** modulator, such as illustrated in FIG. **2**A. The QAM **16** Mapping block **229** accepts a four bit input signal at a frequency of 156.25 MHz. The QAM **16** Mapping block **229** then maps the four input bits into I (inphase) and Q (quadrature) representations of the input bits received The I and Q values are then provided to Square Root Raised Cosine Filters **231** and **233** respectively. The sampling frequency f_S of Square Root Raised Cosine Filters **231** and **233** is typically three times the symbol rate or higher (in the present example 468.75 Mhz or higher). Because of the DSP based implementation, the carrier frequency $\omega_0=2\pi f_0$ must be limited to a relatively low value such as 100 Mhz. Higher carrier frequencies would require an increase in the sampling frequency f_S of the square root raised cosine filters and D/A Converters making the implementation difficult. The signals are then multiplied in blocks **235** and **237** and summed in block **239**. The summed value is then coupled into a Digital to Analog converter **241**, and then further into a smoothing filter prior to the coupling of the signal to the mixer (e.g. **207**).

FIG. **2**C is a block diagram of an analog implementation of a QAM-**16** modulator, such as illustrated in FIG. **2**A. The QAM **16** Mapping block **229** accepts a four bit input signal at a frequency of 156.25 MHz. The QAM **16** Mapping block **229** then maps the four input bits into I (inphase) and Q (quadrature) representations of the input bits received The I and Q values are then provided to Square Root Raised Cosine Filters **231** and **233** respectively. The outputs of the Square Root Raised Cosine Filters **231** and **233** are then coupled into D/A converters **245** and **247**, then further provided to smoothing filters **249** and **251**, prior to being mixed in mixers **253** and **255**, and then farther combined in **257**. In this approach the modulation can be done at the carrier frequency directly fc directly, avoiding the need of the mixer and bandpass filter.

However, this approach requires that the amplitude and phase of the I and Q carriers cos(ωct) and sin(ωct) be very accurate.

FIG. **3** is a block diagram of a MCM receiver. The signal from the laser drive electronics **213** is provided to a laser, for example a solid state laser. The output of the laser is coupled to a fiber optic channel. The output of the fiber optic channel is provided to a photo detector and amplifier **301**. The photodetector and amplifier **301** converts the optical signal into a voltage level. The photo detector and amplifier **301** then couples the amplitude modulated signal into a series of mixers. The output of the photo detector and amplifier **301** corresponds to the output of the combining circuit **211**. The first mixer **303** mixes the incoming signal with zero megahertz. In other words, the signal is basically coupled into a low pass filter **305**. A mixer **303** is illustrated even though no mixing is occurring because, in other embodiments of the MCM system, a first mixer, such as **303**, may provide a programmable mixing function. Low pass filter **305** filters the incoming signal and provides a baseband frequency signal to a QAM-**16** demodulator **307**. The QAM-**16** demodulator demodulates the baseband signal provided to it by the low pass filter **305**. The output of the QAM **16** demodulator is a four bit data signal which is then provided to the XGMII **309**. Similarly, the second mixer **313** accepts the amplitude modulated signal from the photo detector and amplifier **301**. The signal is then mixed with a 200 megahertz mixer signal which translates a portion of the signal bandpass, corresponding to 200 to 400 megahertz, into a baseband signal. The baseband signal is filtered in the low pass filter **315** thereby eliminating other unwanted, non-baseband signals. The output of the low pass filter is then coupled into a QAM-**16** demodulator **317**. The output of the QAM-**16** demodulator **317** is a four bit symbol which is coupled into the XGMII **309**.

Additional mixers (e.g. **303** and **313**) are provided with mixing signals separated by 200 megahertz. The 16th mixer **319** accepts the bandpass signal from the photo detector and amplifier **301**, and mixes it with a three gigahertz signal. The output of the mixer **319** is then coupled into a low pass filter **321**. The low pass filter **321** passes the resulting baseband signal and provides it to the QAM-**16** demodulator **322**. The QAM-**16** demodulator demodulates the signal into a four bit data signal. The four bit symbol is then coupled into the XGMII (Ten Gigabit Media Independent Interface) unit **309**. The XGMII combines all 16 input symbols provided to it to produces a stream **311** 64 bits wide.

FIG. **4** is a block diagram of an alternative implementation of a multi-carrier transmitter. In FIG. **4**, a 64 bit wide digital signal **401** is coupled into a XGMII **403**. The XGMII interface separates the bits into four bit groups. Each four bit group is coupled into an assembling coder, for example, **405**, **415** or **419**..The output of each symbol encoder is then coupled into an inverse fast Fourier transform block **407**. Digital to analog converters for example, **409**, **417** and **421** convert the output of the inverse fast Fourier transform (IFFT) block **407** into analog samples. The analog samples

are then coupled into an analog multiplexer **411** with a sampling frequency of five gigahertz. The analog multiplexer multiplexes all analog signals into a single waveform comprising successive samples. The analog waveform is then coupled into laser drive electronics **413** and is used to modulate the laser intensity using drive electronics **413**. The implementation illustrated in FIG. **4** may be integrated into one integrated circuit device **423** capable of accepting a 64 bit wide digital bit stream. In the present embodiment, the 64 bit wide digital signal stream has a frequency of 156.25 megahertz resulting in an overall data carrying capacity of 10 gigabits per second. The laser drive electronics **413** intensity modulates the laser beam, which is then coupled into a fiber optic channel. The other end of the fiber optic channel is then coupled into the photo detector and amplifier **501** of the receiver module, for example, as illustrated in FIG. **5**.

FIG. **5** is a block diagram of an alternate implementation of multi-carrier modulation receiver, corresponding to the alternative implementation of multi-carrier modulation transmitter illustrated in FIG. **4**. The photo detector and amplifier **501** receive the multi-carrier modulated signal from the fiber optic and convert it into an electrical signal. The resulting electrical signal from photo detector and amplifier **501** is coupled into an array of sample and hold circuits, for example sample and holds **503**, **515** and **521**. The sample and hold circuit samples successive values in the input waveform. The output of the sample and hold circuits are then coupled into analog to digital converters such as for example **505**, **517** and **523**. The digital outputs from the analog to digital converters are further coupled into a fast Fourier transform module **507**. The sequence of symbols which comprise the output of the fast Fourier transform block **507** are coupled into symbol decoders, for example, **509**, **519** and **525**. The output of each symbol decoder is a set of four data bits. The set, of four bits from each symbol decoder is coupled into the XGMII interface **511**. The XGMII interface **511** receives the four bit input from the symbol decoders and forms a 64 bit parallel output. The 64 bit parallel output from the XGMII **511** is clocked out at a frequency of 156.25 megahertz. The output of the XGMII therefore represents a 10 gigabit per second digital data stream. The entire receiver represented by the block **525** can be integrated within a single integrated circuit, such as a CMOS integrated circuit.

The transmission techniques illustrated in FIGS. **2**, **3**, **4** and **5** can provide for 10 gigabits per second data transmission at a symbol rate of 156.25 megahertz by utilizing the intrinsic parallelism present in the sub-carrier multiplexing technique.

If a non-parallel method were used to transmit 10 gigabits per second at a symbol rate of 156.25 megahertz, 64 bits per symbol would be required to achieve the 10 gigabit per second data rate. This would result in a modulation constellation of astronomical complexity and low noise immunity. Even if the symbol rate was quadrupled to 625 megahertz, a 65,536 QAM constellation would be required. In addition, because the 156.25 megahertz rate is relatively low, multi-carrier modulation is robust and multi-path propagation effects, such as multi-mode dispersion in fibers, is minimized due to the low transmission frequency. Those skilled in the art will recognize that the multi-carrier modulation technique just described is exemplary. Many variations of individual bandpasses, modulation constellations and carrier frequencies are possible within the scope of the inventive concepts of this disclosure.

The multi-carrier modulation concepts illustrated in FIGS. **2**, **3**, **4**, and **5** may also be used to increase the data rate within current deployed fiber networks. A difficulty that may be encountered with current fiber networks is that some of the fibers used in current fiber channels may be of lesser quality.

FIG. **10** shows a modification of the transmitter of FIG. **2**A that incorporates trellis coding. The 4-bit input from the XGMII block is passed to a rate 5/4 convolutional coder. The 5-bit output from the convolutional coder is modulated using a QAM-32 modulator. Trellis coding requires an expanded constellation, but does not increase the symbol rate of the QAM modulator or the bandwidth of the modulated signal. The same idea can be applied to the alternative transmitter implementation of FIG. **4**. This is shown in FIG. **11**. The modified receivers incorporating trellis decoders for the implementations of FIGS. **3** and **5** are shown in FIGS. **12** and **13** respectively. The use of trellis coding results in increased robustness and decreased error rate in the presence of noise and other channel impairments. While FIGS. **10** through **13** show particular embodiments of trellis coding and decoding for an optical communications transceiver, it will be clear to anyone skilled in the art that many alternative embodiments are possible without departing from the spirit and scope of the present invention.

Those fiber channels may exhibit channel anomalies such as deep nulls, particularly in the case of fibers with multi-mode dispersion. Such nulls are illustrated in FIG. **6**.

FIG. **6** is a graph of intensity versus frequency representing the transfer function of an exemplary fiber optic system. The ideal response is linear, that is the transmitted intensity does not vary as the laser light output is modulated at different frequencies. However fiber optic systems, particularly those exhibiting multi-mode interference, may exhibit nulls such as **603** and **605**. The nulls **603** and **605** may be due in part to a large number of different factors such as multi-mode dispersion within the fiber, imperfect coupling of the fiber to the light source, frequency response of driver electronics and a variety of other factors.

FIG. **7**A is a block diagram of a circuit implementation, as may be used with fiber channels exhibiting nulls, noise and/or frequency roll off. In FIG. **7**, a parallel bit stream **701** comprising bits **0** through **63** is coupled into a XGMII interface. The XGMII interface is controlled by a micro controller **727** through a controlling bus **729**, such as an I^2C bus. The control bus **729** controls the XGMII controller so that the number of bits which are provided to each modulator such as **705**, **713** and **719**, are variable. Additionally, the micro controller **727** using the control bus **729** may control the modulation constellations of the modulators within the system. The control bus may also control the modulation frequencies such as **731**, **733** and **735** which are applied to mixer **707**, **715** and **721**, respectively. The micro controller **727** may also control the bandpass filters such as **709**, **717** and **723**. The micro controller **727** may control the system variables so that the mapping of data from the input **701** through the modulators and frequency bands avoids fiber channel anomalies such as nulls within the optic system, for example the nulls illustrated at **603** and **605** of FIG. **6**.

In order to configure the circuit **225** to avoid nulls and to match the noise response of the channel the configuration of the transmitter can be arranged to match the transfer characteristics of the fiber channel. To arrange the configuration of the transmitter the transfer characteristics of, the fiber channel characteristics need to be determined. Such a process to determine the frequency response of the fiber channel is illustrated in FIG. **7**B.

FIG. **7**B is a flow diagram illustrating the process by which the transfer characteristics of a fiber channel may be

mapped. The process begins in block number **741** when the transmitter and receiver are coupled to a fiber channel. In block **743**, the transmitter then transmits an intensity modulated signal, preferably having a flat frequency characteristic, in which the frequency of intensity is swept from the minimum frequency, to be used on the channel, to the maximum frequency, to be used on the channel. In block **745**, the receiver receives the signal and measures intensity versus frequency. This measurement of intensity versus frequency between the frequencies of F_{min} and F_{max} will characterize the frequency transfer characteristic of the fiber channel. The measurements of intensity versus frequency are then communicated from the receiver to the transmitter. In block **747** the transmitter maps the fiber channel response onto the circuitry of the transmitter. The process then ends in block **749**.

As an illustration of configuring the transmitter according to the fiber channel response, FIG. **2**A is compared with FIG. **7**A. In FIG. **2**, for example, modulator **213** receives a four bit value. Modulator **213** utilizes a QAM-**16** modulator. The carrier frequency is 100 megahertz and the bit rate is 156.25 megahertz. The bandpass filter **217** is then set to a value of 0 to 200 megahertz. The other modulators and bandpass filters could be similarly set according to channel characteristics.

If for instance one half of the 200 megahertz baseband frequency of the bandpass filter **217** corresponded to a null within the fiber optic channel, the null could be compensated for (as shown in FIG. **7**A) by reducing the symbol rute rw modulator **713**. Modulator **713** would then only accept 2 bits of data from the XGMII interface **703** at a time. The micro controller **727** could program the XGMII **703** to couple only 2 bits at a time into modulator **713**. If on the other hand, the particular band corresponding to modulation frequency two were exceptionally free of noise, the XGMII could be controlled by the micro controller **727** to couple five bits into modulator **713** and QAM-**32** could be used within modulator **213**. Similarly, the bandwidths of the carriers could be adjusted to be wider or narrower and carry more or less information depending on the characteristics of the fiber channel. The mapping, of course, would have to be communicated either explicitly or implicitly to the receiver in order for the data stream communicated to be properly decoded. FIG. **8** is an example of a multi-carrier modulation receiver that may be used with the transmitter illustrated in FIG. **7**A.

FIG. **8** is a block diagram of a receiver as may be used with the transmitter illustrated in FIG. **7**A. In FIG. **8** the photo detector and amplifier **801** receives a signal from the fiber channel. The receiver **825** has been configured to match the transmitter **725** in FIG. **7**A. The receiver in FIG. **8** may be configured in a variety of ways. The receiver illustrated in FIG. **8** may be configured explicitly by receiving a mapping of the channel transfer characteristic from the transmitter. The receiver in FIG. **8** may be also mapped implicitly by having the same mapping algorithm within the micro controller **827** as within the micro controller **727**. Because the mapping of the frequency characteristics of the fiber channel is accomplished by sending a signal from the transmitter to the receiver and the receiver sending the characteristics of the fiber channel to the transmitter, the receiver already knows the characteristics of the fiber channel because of the signal received from the transmitter. If the same algorithm for mapping modulation, mixer frequencies and bandpass filter widths are used within the receiver as within the transmitter the configuration of the transmitter need not be expressly communicated to the receiver only the overall response of the channel need be communicated. For example, after the frequency response of the channel dictated that 2 bits would be coupled into modulate **713** at a time, the same algorithm within micro controller **827** would configure demodulator two block number **817** as an 8PSK demodulator. Alternately, the configuration from the transmitter circuit may be communicated to the receiver circuit explicitly on start up. By using the transmitter in FIG. **7**A, mapping the fiber channel and communicating the mapping to similarly configure a receiver as illustrated in FIG. **8**, the capacity of any existing fiber channel, no matter the characteristic, can be accommodated. Additionally, the system illustrated in FIG. **7**A and FIG. **8** may be extended through the use of multiple wavelength lasers and parallel MCM transmitter receiver pairs. For example, an existing fiber can have two laser beams coupled through it to communicate between a sending end and a receiving end. Such a system is illustrated in FIG. **9**.

FIG. **9** is a block diagram illustrating the use of a set of three multi-carrier modulation transmitters and three corresponding multi-carrier modulation receivers used in parallel in order to increase the data carrying capacity of the illustrated fiber channel. In FIG. **9**, three multi-carrier modulation transmitters **725**A, **725**B and **725**C are employed in order to intensity modulate the beams of three lasers **903**, **905** and **907**. The embodiment of FIG. **9** is by way of illustration and example only. The number of multi-carrier modulation transmitters, lasers and receivers that are used may vary from embodiment to embodiment depending on the capacity desired and the transfer characteristics of the fiber channel **911** carrying the data. In FIG. **9**, data is input serially to a splitter **901**. Splitter **901** splits the data so that three separate streams of data are coupled into three multi-carrier modulation transmitter modules **725**A, **725**B and **725**C. The multi-carrier modulation transmitter modules **725**A, **725**B and **725**C may be identical modules. In a preferred embodiment, each module is implemented as a single integrated circuit chip, for example, a CMOS integrated circuit chip. The multi-carrier modulation transmitters are further coupled into laser drive electronics **713**A, **713**B, and **713**C, respectively. Laser drive electronic **713**A drives laser **903**, laser drive electronic **713**B drives laser **905**, and laser drive electronic **713**C drives laser **907**. The outputs of lasers **903**, **905** and **907** are combined optically in a combiner **909** which also couples the combined optical beams into a fiber optic channel **911**. The fiber optic channel **911** carriers the three laser beams to a receiver and beam splitter **913**. The receiver and beam splitter **913** splits the output from the fiber optic channel **911** back into its constituent laser carriers. The three laser carriers are then coupled into photo detectors and amplifiers **801**A, **801**B, and **801**C. The photo detectors and amplifiers convert the light signal into an electrical signal which is then further coupled into multi-carrier modulation receivers **825**A, **825**B and **825**C. Multi-carrier modules **825**A, **825**B and **825**C may be identical and may operate in parallel without needing to be aware of the operation each other. The output of the multi-carrier modulation receivers are then combined in combiner block **915**A and produce an output data stream. Multi-carrier modulation transmitters, lasers and multi-carrier modulation receivers can be added as needed in order to achieve the capacity desired.

For example, if the fiber optic channel **911** is an existing fiber optic channel for a local area network and it is desired to upgrade it to service a 10 gigabit ETHERNET network, transmitters, lasers and receivers may be added in parallel until the 10 gigabit capacity is achieved. The multi-carrier

modulation transmitters and receiver pairs may cooperate to characterize the fiber optic channel at each laser wavelength used. By combining multiple multi-carrier modulation transmitters, as illustrated at **917**, and multi-carrier modulation receivers as illustrated at **919**, a very efficient architecture for implementing high speed data rate communications utilizing existence fibers can be accomplished. For example, by combining the data splitter **901** with a plurality of multi-carrier modulation transceivers **725**, as illustrated at **917**, a number of lasers can be accommodated. Likewise, a number of receivers **825** and a data combiner **915** can be combined in a single integrated circuits **919**. These circuits can then be coupled to laser drive electronics and laser receiving electronics as needed in order to achieve any capacity desired. Accordingly, existing fiber optic channels **911** can be upgraded at reasonable costs without having to replace existing fiber channels. The receivers and transmitters can adjust to the characteristics of the fiber channel and high speed networks, for example, 10 gigabit communication networks, can be implemented despite the fact even in fiber channels of inferior quality.

Even if fiber channels have grossly inferior transfer characteristics the channel may be upgraded to a high data rate by adding as many of the configurable multi-carrier modulation receivers in parallel as necessary to achieve the desired data rates and noise immunities.

FIG. **10** is a block diagram illustrating a modification of the transmitter of FIG. **2**A to incorporate trellis coding.

Exemplarily a 4-bit input from the XGMII block **1003** is passed to a rate 5/4 convolutional coder **1005**. The 5-bit output from the convolutional coder is modulated using a QAM-32 modulator**1021** prior to being coupled to a mixer **1017**. The mixer **1017** then couples the mixed signal to a bandpass filter **1021**, which filters out unwanted components and further provides the filtered signal to a combiner circuit **1027**. The combiner circuit **1027** combines all the bandpass signals provided to it by the plurality of bandpass filters and then provides the combined signal to the laser drive electronics **1027**.

Trellis coding requires an expanded constellation, but does not increase the symbol rate of the QAM modulator or the bandwidth of the modulated signal, accordingly in the present exemplary embodiment a QAM 32 modulator is used to accommodate a 5 bit input. Other modulators may be used depending on implementation requirements. The convolutional coder provides a trellis encoding that enhances the robustness of the code and reduces such problems as inter-symbol interference.

FIG. **11** is a block diagram illustrating a modification of the alternate transmitter of FIG. **4** to incorporate trellis coding. In FIG. **11** a 5/4 convolutional coder accepts a 4 bit input and provides a 5 bit output. The addition of a convolutional encoder provides redundancy in the code and provides a mechanism for reducing problems such as inter-symbol interference.

FIG. **12** is a block diagram illustrating a modification of the receiver of FIG. **3** to receive a trellis coded signal. In FIG. **12** a QAM. **32** demodulator **1215** is disposed between the low pass filter (for example **1209**) and the XGMII **1227**. The QAM **32** demodulator **1215** produces soft decisions for the purpose of providing them to a trellis decoder **1221**. The demodulator **12** has been chosen as a QAM 32 demodulator in order to match the input signal. Other demodulators may be used corresponding to the modulation of the transmit signal.

FIG. **13** is a block diagram illustrating a modification of the receiver of FIG. **4** to receive a trellis coded signal. In FIG. **13** the 32 Inverse Fourier Transform provides symbols (S) along with the complex conjugate of the signals (S*) to a trellis decoder. The trellis decoder decodes the symbols and then provides a 4 bit output signal to the XGMII to combine with other signals in order to produce the output signal.

The use of trellis coding results in increased robustness and decreased error rate in the presence of noise and other channel impairments. While FIGS. **10** through **13** show particular embodiments of trellis coding and decoding for an optical communications transceiver, it will be clear to anyone skilled in the art that many alternative embodiments are possible without departing from the spirit and scope of the present invention. For example the convolutional coders may be changed, the modulators may utilize other modulation constellations and modulation frequencies, and the modulators, encoders, bandpass filters, demodulators, also may be changed for example to accommodate the characteristics of the fiber channel.

What is claimed is:

1. An apparatus for transmitting data on a fiber channel, the apparatus comprising:

a Gigabit Media Independent Interface (GMII) that receives a digital signal to be transmitted;

a plurality of programmable modulators each configured to accept a portion of the digital signal to be transmitted, and to modulate the portion of the digital signal accepted;

a plurality of mixers, each mixer coupled to the output of one of the programmable modulators to accept a modulated signal and mix it with a mixer frequency;

a plurality of bandpass filters, that filter the output of the mixers; and

a summation unit that combines the outputs of the bandpass filters into a single signal.

2. An apparatus for transmitting data on a fiber channel, the apparatus comprising:

an input that receives a digital signal to be transmitted;

a plurality of programmable modulators each configured to accept a portion of the digital signal to be transmitted, and to modulate the portion of the digital signal accepted;

a plurality of mixers, each mixer coupled to the output of one of the programmable modulators to accept a modulated signal and mix it with a mixer frequency;

a plurality of bandpass filters, that filter the output of the mixers; and

a summation unit that combines the outputs of the bandpass filters into a single signal;

wherein the input that receives a digital signal to be transmitted further comprises a control input that controls the number of bits of the digital signal to be transmitted which are provided to each modulator.

3. An apparatus for transmitting data on a fiber channel, the apparatus comprising:

an input that receives a digital signal to be transmitted;

a plurality of programmable modulators each configured to accept a portion of the digital signal to be transmitted, and to modulate the portion of the digital signal accepted, each programmable modulator comprising a control input that controls the type of modulation that is applied to the portion of the digital signal that is accepted by each modulation;

a plurality of mixers, each mixer coupled to the output of one of the programmable modulators to accept a modulated signal and mix it with a mixer frequency;

a plurality of bandpass filters, that filter the output of the mixers; and

a summation unit that combines the outputs of the bandpass filters into a single signal.

4. An apparatus as in claim **3** wherein the type of modulation selected consists essentially of binary phase shift keying (BPSK), quadrature phase shift keying (QPSK), and quadrature amplitude modulation (QAM).

5. An apparatus for transmitting data on a fiber channel, the apparatus comprising:

an input that receives a digital signal to be transmitted;

a plurality of programmable modulators each configured to accept a portion of the digital signal to be transmitted, and to modulate the portion of the digital signal accepted;

a plurality of mixers, each mixer coupled to the output of one of the programmable modulators to accept a modulated signal and mix it with a mixer frequency;

a plurality of bandpass filters, that filter the output of the mixers; and

a summation unit that combines the outputs of the bandpass filters into a single signal;

wherein the apparatus is integrated within a complementary Metal Oxide Semiconductor (CMOS) integrated circuit.

6. A method of transmitting data on a fiber channel, the method comprising:

receiving a digital signal to be transmitted;

modulating a plurality of portions of the digital signal to be transmitted to produce a plurality of modulated signals;

adaptively controlling the type of modulation that is applied to each portion of the digital signal;

mixing each of the modulated signals with a mixer frequency to produce a plurality of mixed signals;

filtering each of the mixed signals with a bandpass filter to produce a plurality of filtered signals; and

combining the filtered signals into a single signal.

7. The method of claim **6** wherein the digital signal to be transmitted is received by a Gigabit Media Independent Interface (GMII).

8. The method of claim **6** further comprising controlling the number of bits that comprise each portion of the digital signal.

9. The method of claim **6** wherein modulating the plurality of portions of the digital signal comprises performing binary phase shift keying (BPSK), quadrature phase shift keying (QPSK) and quadrature amplitude modulation (QAM).

10. The method of claim **6** wherein the mixer frequency is programmable.

11. The method of claim **6** wherein each bandpass filter has a programmable bandpass.

12. An apparatus for transmitting data on a fiber channel, the apparatus comprising:

an input that receives a digital signal to be transmitted;

a plurality of programmable modulators each configured to accept a portion of the digital signal to be transmitted, and to modulate the portion of the digital signal accepted;

a plurality of mixers, each mixer coupled to the output of one of the programmable modulators to accept a modulated signal and mix it with a mixer frequency;

a plurality of bandpass filters, that filter the output of the mixers;

a summation unit that combines the outputs of the bandpass filters into a single signal; and

a plurality of convolutional coders disposed between the input and at least one of the plurality of programmable modulators and accepting a portion of the signal to be transmitted from the input and performing a convolutional coding on the accepted signal thereby providing a convolutionally coded output to the at least one of the plurality of programmable modulators.

* * * * *