SFF specifications are available at http://www.snia.org/sff/specifications
or ftp://ftp.seagate.com/sff

This specification was developed by the SFF Committee prior to it becoming the SFF TA (Technology Affiliate) TWG (Technical Working Group) of SNIA (Storage Networking Industry Association).

The information below should be used instead of the equivalent herein.

POINTS OF CONTACT:

Chairman SFF TA TWG
Email: SFF-Chair@snia.org

If you are interested in participating in the activities of the SFF TWG, the membership application can be found at:
http://www.snia.org/sff/join

The complete list of SFF Specifications which have been completed or are currently being worked on can be found at:
http://www.snia.org/sff/specifications/SFF-8000.TXT

The operations which complement the SNIA's TWG Policies & Procedures to guide the SFF TWG can be found at:
http://www.snia.org/sff/specifications/SFF-8032.PDF

Suggestions for improvement of this specification will be welcome, they should be submitted to:
http://www.snia.org/feedback

Nokia of America Corporation
IPR2023-00680, Ex. 1014
Ex. 1014.1

SFF Committee documentation may be purchased in hard copy or electronic form
SFF specifications are available at ftp://ftp.seagate.com/sff

SFF Committee

INF-8074i Specification for

SFP (Small Formfactor Pluggable) Transceiver

Rev 1.0 May 12, 2001

Secretariat: SFF Committee

Abstract: This specification describes the SFP (Small Formfactor Pluggable) Transceivers developed by the MSA (Multiple Source Agreement) group. The following companies participated in the MSA.

Agilent Technologies	IBM
Blaze Network Products	Lucent Technologies
E2O Communications	Molex
ExceLight Communications	Optical Communication Products
Finisar	Picolight
Fujikura Technology America	Stratos Lightwave
Hitachi Cable	Tyco Electronics
Infineon Technologies	

This Information Specification was not developed or endorsed by the SFF Committee and was submitted for distribution on the basis that it is of interest to industry.

The copyright on the contents remains with the contributor.

Contributors are not required to abide by the SFF patent policy. Readers are advised of the possibility that there may be patent issues associated with an implementation which relies upon the contents of an 'i' specification.

SFF accepts no responsibility for the validity of the contents.

POINTS OF CONTACT:

Schelto van Doorn
Technical Editor
Intel/nSerial
3101 Jay St #110
Santa Clara CA 95054

408-496-3426
408-486-9783Fx
schelto.vandoorn@intel.com

I. Dal Allan
Chairman SFF Committee
14426 Black Walnut Court
Saratoga
CA 95070

408-867-6630
408-867-2115Fx
endlcom@acm.org

EXPRESSION OF SUPPORT BY MANUFACTURERS

The following member companies of the SFF Committee voted in favor of this industry specification.

EMC
ENDL
FCI/Berg
Hitachi Cable
Picolight
Toshiba America
Unisys

The following member companies of the SFF Committee voted to abstain on this industry specification.

Fujitsu CPA
IBM
Seagate
Tyco AMP

If you are not a member of the SFF Committee, but you are interested in participating, the following principles have been reprinted here for your information.

PRINCIPLES OF THE SFF COMMITTEE

The SFF Committee is an ad hoc group formed to address storage industry needs in a prompt manner. When formed in 1990, the original goals were limited to defining de facto mechanical envelopes within which disk drives can be developed to fit compact computer and other small products.

Adopting a common industry size simplifies the integration of small drives (2 1/2" or less) into such systems. Board-board connectors carrying power and signals, and their position relative to the envelope are critical parameters in a product that has no cables to provide packaging leeway for the integrator.

In November 1992, the SFF Committee objectives were broadened to encompass other areas which needed similar attention, such as pinouts for interface applications, and form factor issues on larger disk drives. SFF is a forum for resolving industry issues that are either not addressed by the standards process or need an immediate solution.

Documents created by the SFF Committee are expected to be submitted to bodies such as EIA (Electronic Industries Association) or an ASC (Accredited Standards Committee). They may be accepted for separate standards, or incorporated into other standards activities.

The principles of operation for the SFF Committee are not unlike those of an accredited standards committee. There are 3 levels of participation:

- Attending the meetings is open to all, but taking part in discussions is limited to member companies, or those invited by member companies
- The minutes and copies of material which are discussed during meetings are distributed only to those who sign up to receive documentation.
- The individuals who represent member companies of the SFF Committee receive documentation and vote on issues that arise. Votes are not taken during meetings, only guidance on directions. All voting is by letter ballot, which ensures all members an equal opportunity to be heard.

Material presented at SFF Committee meetings becomes public domain. There are no restrictions on the open mailing of material presented at committee meetings. In order to reduce disagreements and misunderstandings, copies must be provided for all agenda items that are discussed. Copies of the material presented, or revisions if completed in time, are included in the documentation mailings.

The sites for SFF Committee meetings rotate based on which member companies volunteer to host the meetings. Meetings have typically been held during the ASC T10 weeks.

The funds received from the annual membership fees are placed in escrow, and are used to reimburse ENDL for the services to manage the SFF Committee.

If you are not receiving the documentation of SFF Committee activities or are interested in becoming a member, the following signup information is reprinted here for your information.

Membership includes voting privileges on SFF Specs under development.

CD_Access Electronic documentation contains:
- Minutes for the year-to-date plus all of last year
- Email traffic for the year-to-date plus all of last year
- The current revision of all the SFF Specifications, as well as any previous revisions distributed during the current year.

Meeting documentation contains:
- Minutes for the current meeting cycle.
- Copies of Specifications revised during the current meeting cycle.

Each electronic document mailing obsoletes the previous mailing of that year e.g. July replaces May. To build a complete set of archives of all SFF documentation, retain the last SFF CD_Access mailing of each year.

Name: _____ Title: _____

Company: _____

Address: _____

_____

Phone: _____ Fax: _____

Email: _____

Please register me with the SFF Committee for one year.

___ Voting Membership w/Electronic documentation $ 2,160

___ Voting Membership w/Meeting documentation $ 1,800

___ Non-voting Observer w/Electronic documentation $ 660 U.S.
$ 760 Overseas

___ Non-voting Observer w/Meeting documentation $ 300 U.S.
$ 400 Overseas

Check Payable to SFF Committee for $_____ is Enclosed

Please invoice me for $_____ on PO #: _____

MC/Visa/AmX_____ Expires_____

SFF Committee
14426 Black Walnut Ct
Saratoga CA 95070

408-867-6630
408-867-2115Fx
endlcom@acm.org

Appendix A. Mechanical Interface

A1. SFP Transceiver Package Dimensions

A2. Mating of SFP Transceiver PCB to SFP Electrical Connector

A3. Host Board Layout

A4. Insertion, Extraction and Retention Forces for SFP Transceivers

A5. Labeling of SFP Transceivers

A6. Bezel Design for Systems Using SFP Transceivers

A7. SFP Electrical Connector Mechanical Specifications

A8. SFP Cage Assembly Dimensions

Appendix B. Electrical Interface

B1. Introduction

B2. Pin Definitions

B3. Timing Requirements of Control and Status I/O

B4. Module Definition Interface and Data Field Description

Appendix C. Agreement Signatures

Appendix A. Mechanical Interface

A1. SFP Transceiver Package Dimensions

A common mechanical outline is used for all SFP transceivers. The package dimensions for the SFP transceiver are described in Table 1 and Figures 1A and 1B.

Table 1. Dimension Table for Drawing of SFP Transceiver

Designator	Dimension (mm)	Tolerance (mm)	Comments
A	13.7	± 0.1	Transceiver width, nosepiece or front that extends inside cage
B	8.6	± 0.1	Transceiver height, front, that extends inside cage
C	8.5	± 0.1	Transceiver height, rear
D	13.4	± 0.1	Transceiver width, rear
E	1.0	Maximum	Extension of front sides outside of cage, see Note 2 Figure 1B
F	2.3	Reference	Location of cage grounding springs from centerline, top
G	4.2	Reference	Location of side cage grounding springs from top
H	2.0	Maximum	Width of cage grounding springs
J	28.5	Minimum	Location of transition between nose piece and rear of transceiver
K	56.5	Reference	Transceiver overall length
L	1.1x45°	Minimum	Chamfer on bottom of housing
M	2.0	± 0.25	Height of rear shoulder from transceiver printed circuit board
N	2.25	± 0.1	Location of printed circuit board to bottom of transceiver
P	1.0	± 0.1	Thickness of printed circuit board
Q	9.2	± 0.1	Width of printed circuit board
R	0.7	Maximum	Width of skirt in rear of transceiver
S	45.0	± 0.2	Length from latch shoulder to rear of transceiver
T	34.6	± 0.3	Length from latch shoulder to bottom opening of transceiver
U	41.8	± 0.15	Length from latch shoulder to end of printed circuit board
V	2.5	± 0.05	Length from latch shoulder to shoulder of transceiver outside of cage (location of positive stop).
W	1.7	± 0.1	Clearance for actuator tines
X	9.0	Reference	Transceiver length extending outside of cage, see Note 2 Figure 1B
Y	2.0	Maximum	Maximum length of top and bottom of transceiver extending outside of cage, see Note 2 Figure 1B
Z	0.45	± 0.05	Height of latch boss
AA	8.6	Reference	Transceiver height, front, that extends inside cage
AB	2.6	Maximum	Length of latch boss (design optional)
AC	45°	± 3°	Entry angle of actuator
AD	0.3	Maximum	Radius on entry angle of actuator
AE	6.3	Reference	Width of cavity that contains the actuator
AF	2.6	± 0.05	Width of latch boss (design optional)
AG	0.40	Minimum	Maximum radius of front of latch boss, 2 places (design optional)

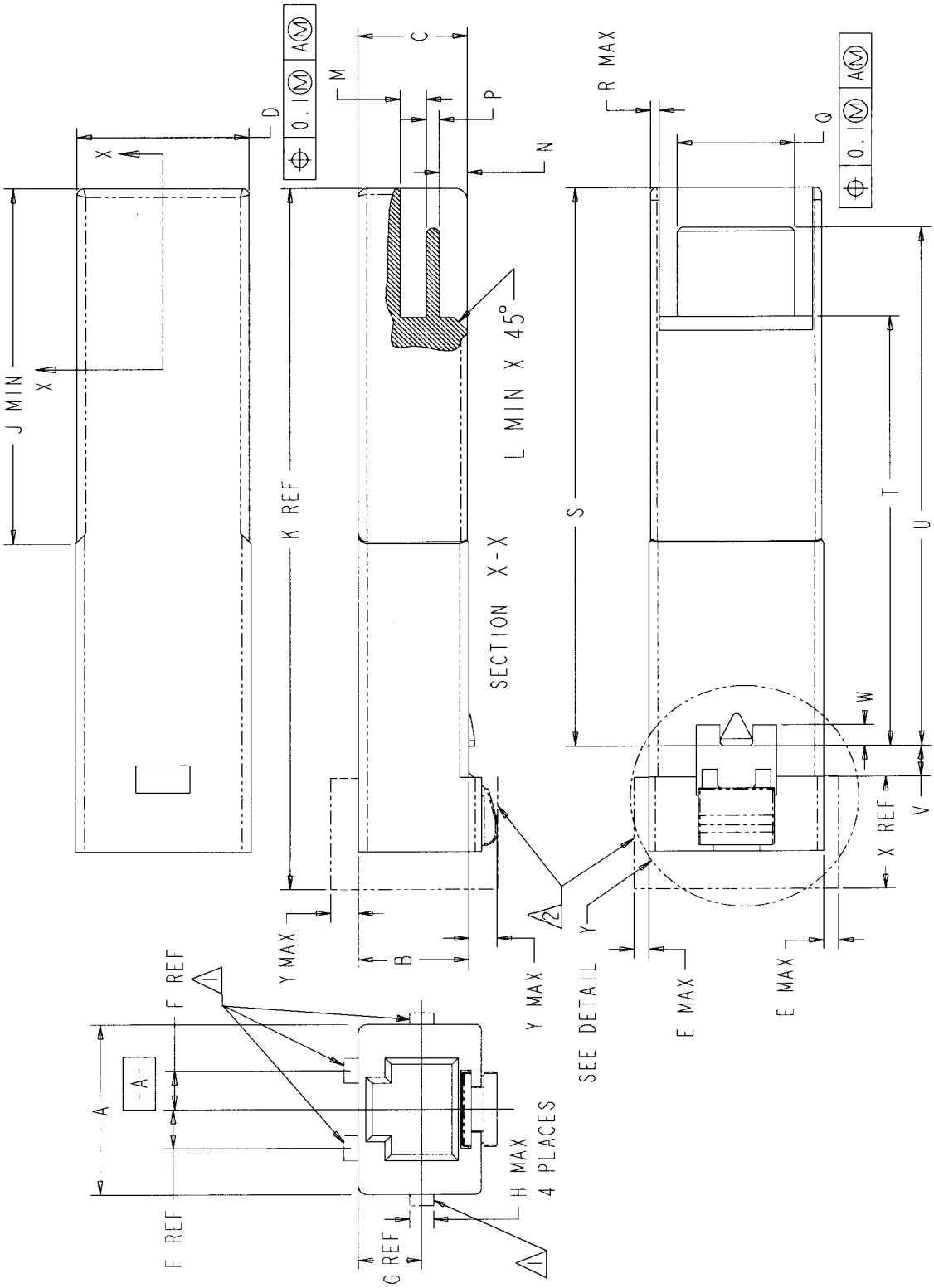

Figure 1A. Drawing of SFP Transceiver

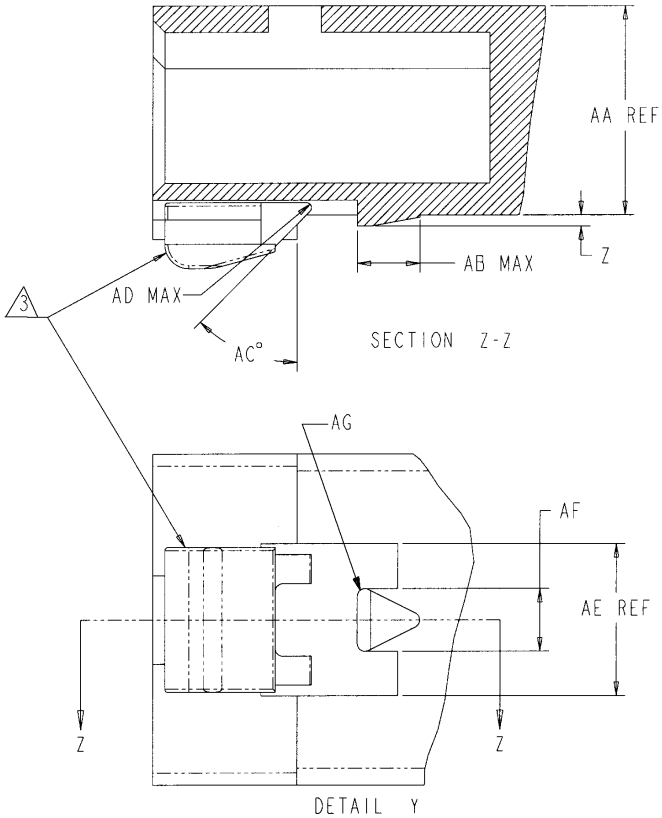

Notes:

1. Cage grounding springs permitted in this area and may extend full length of transceiver, 4 places. Grounding springs may contribute a maximum force of 3.5N (Newtons) to the withdrawal force of the transceiver from the cage.

2. A representative MT-RJ configuration is illustrated. Indicated outline defines the preferred maximum envelope outside of the cage.

3. Design of actuation method and shape is optional.

4. Color code: An exposed colored feature of the transceiver (a feature or surface extending outside the cage assembly) shall be color coded as follows:
   - Black or beige for multi-mode
   - Blue for single mode

Figure 1B. Drawing of SFP Transceiver (Cont.)

A2. Mating of SFP Transceiver PCB to SFP Electrical Connector

The SFP transceiver contains a printed circuit board that mates with the SFP electrical connector. The pads are designed for a sequenced mating:

- First mate – ground contacts
- Second mate – power contacts
- Third mate – signal contacts

The design of the mating portion of the transceiver printed circuit board is illustrated in Figure 2 and the electrical pad layout is illustrated in Figure 3. A typical contact pad plating for the printed circuit board is 0.38 micrometers minimum hard gold over 1.27 micrometers minimum thick nickel. Other plating options that meet the performance requirements are acceptable.

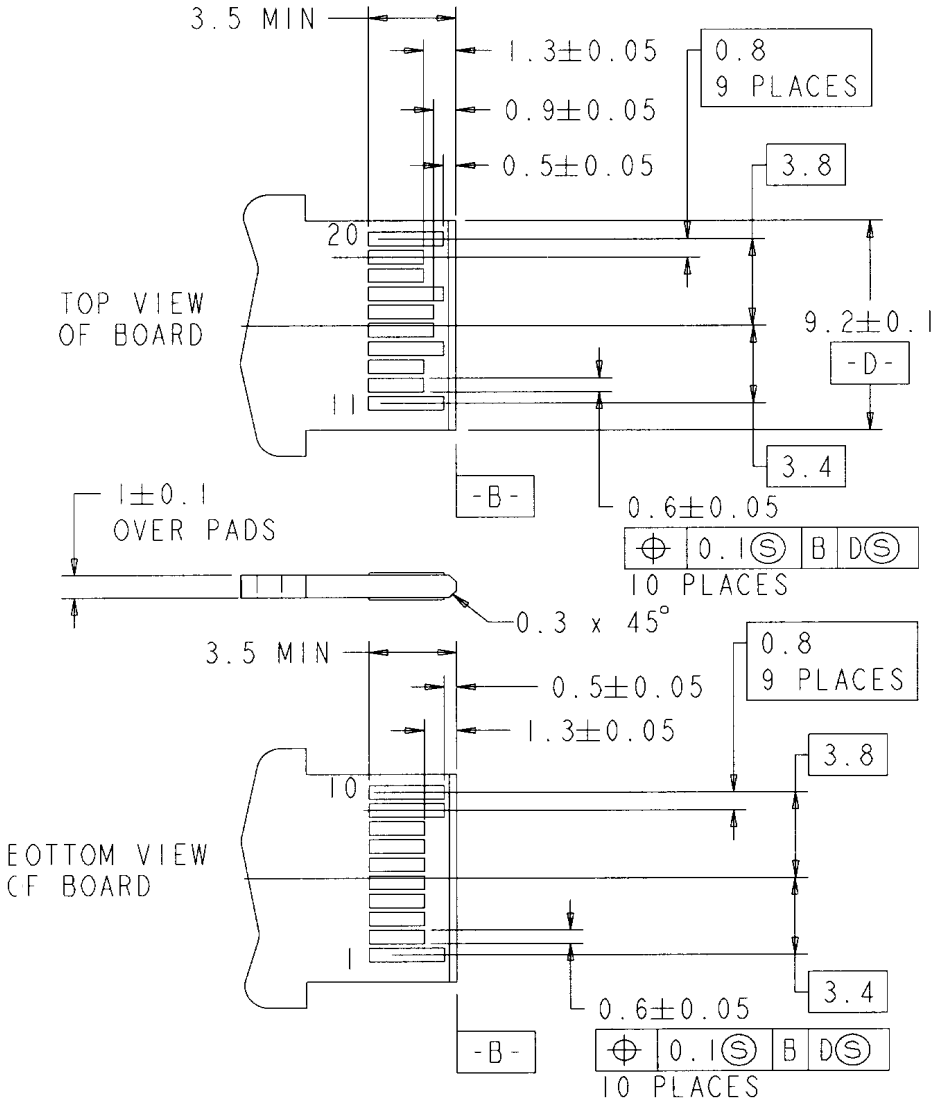

Figure 2. Recommended Pattern Layout for SFP Printed Circuit Board

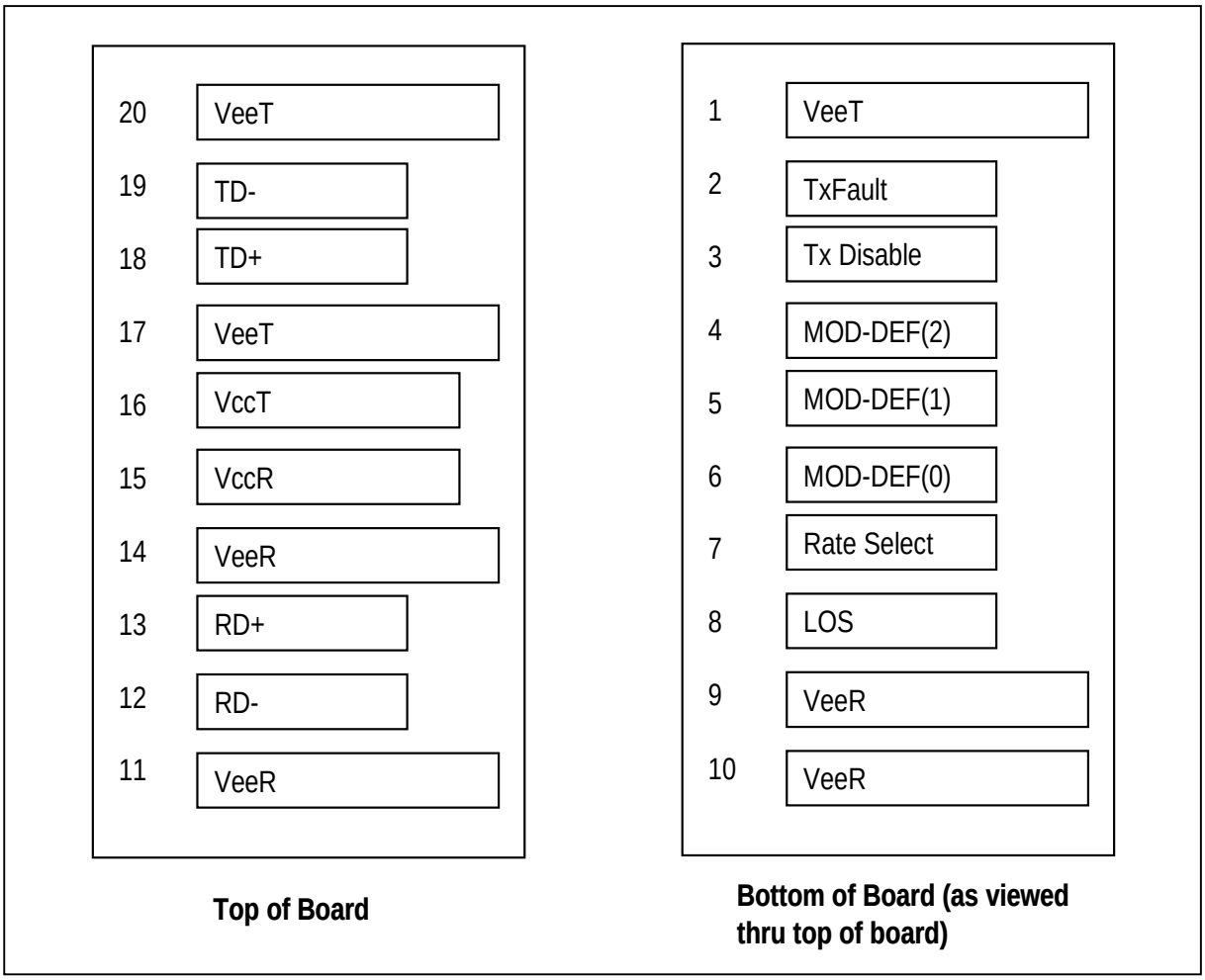

Figure 3. SFP Transceiver Electrical Pad Layout

A3. Host Board Layout

A typical host board mechanical layout for attaching the SFP Connector and Cage System is shown in Figures 4A and 4B.

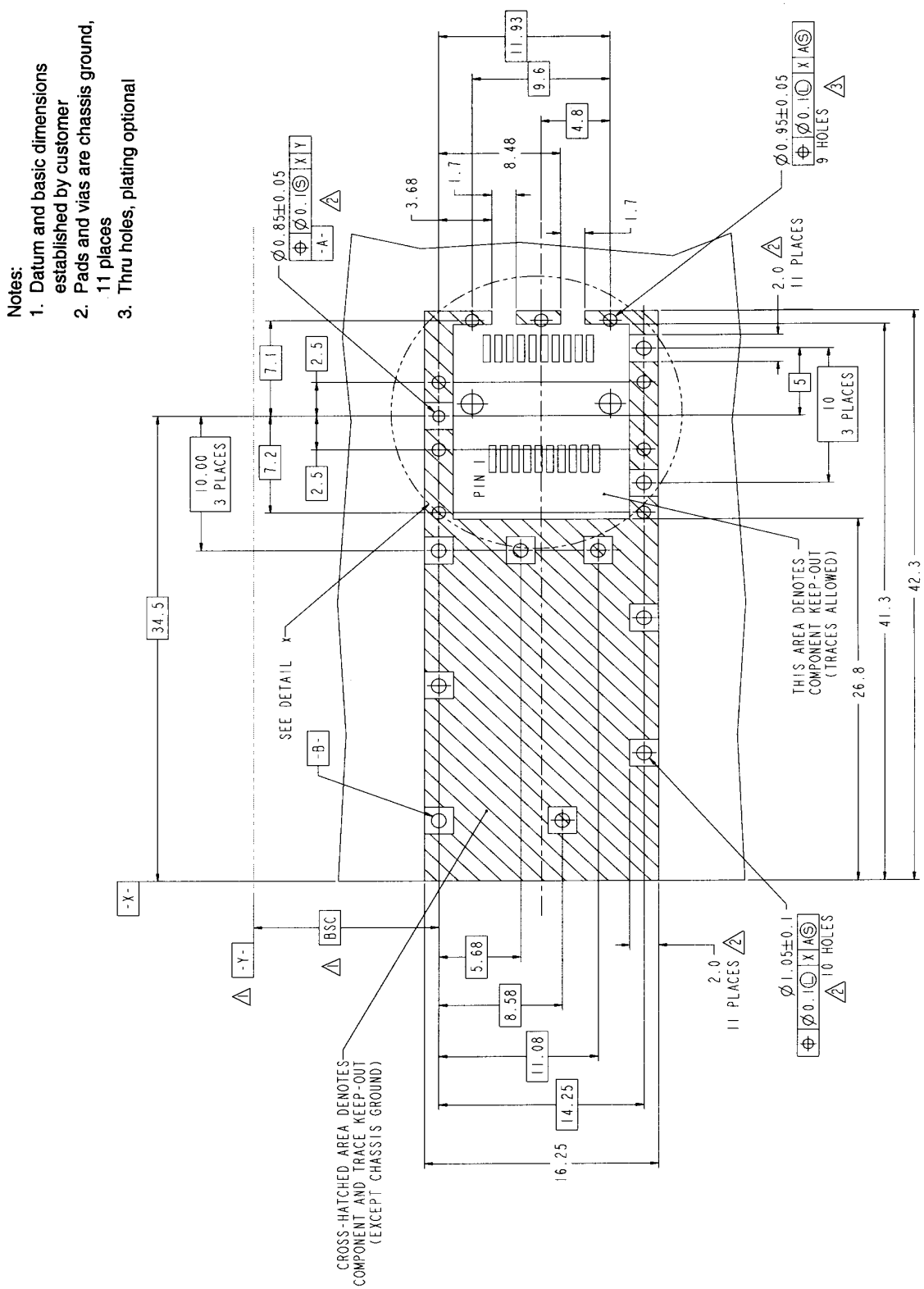

Figure 4A. SFP Host Board Mechanical Layout

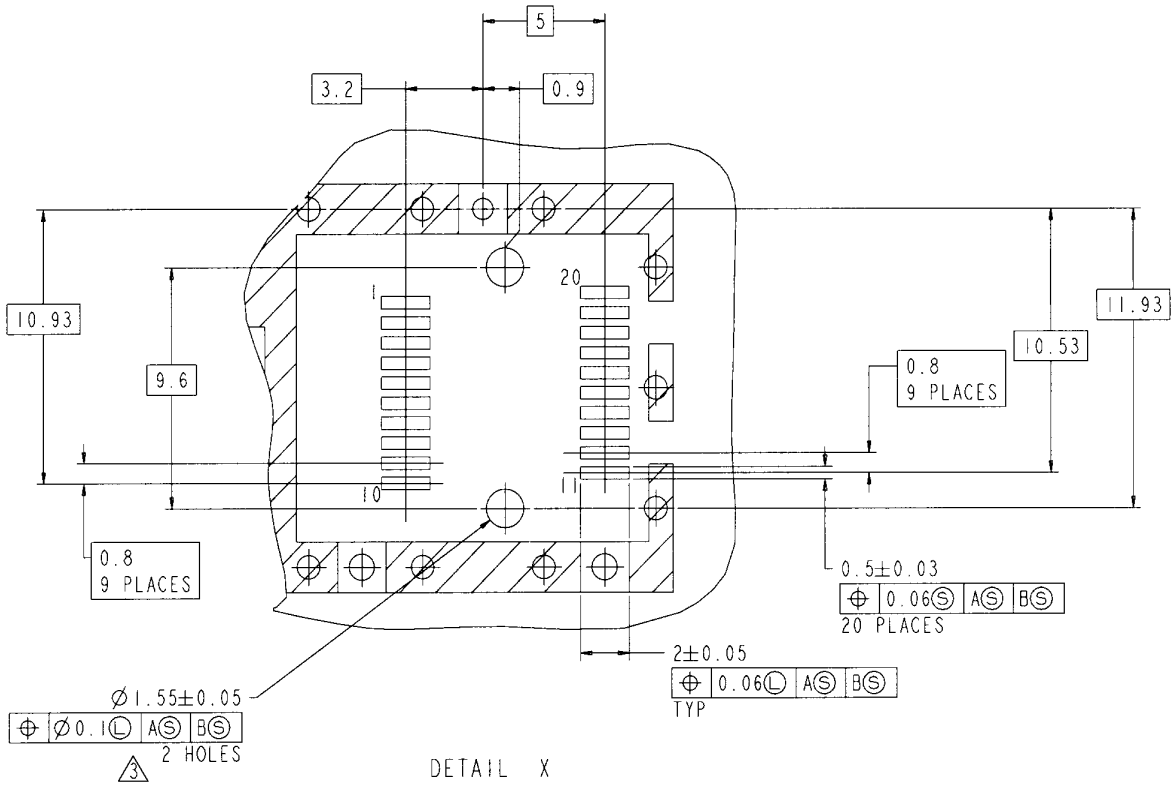

Figure 4B. SFP Host Board Mechanical Layout (Cont.)

A4. Insertion, Extraction and Retention Forces for SFP Transceivers

The requirement for the various functional forces and the durability cycles are specified in Table 2.

Table 2. Insertion, Extraction, and Retention Forces

Measurement	Minimum	Maximum	Units	Comments
SFP transceiver insertion	0	40	Newtons	
SFP transceiver extraction	0	11.5	Newtons	
SFP transceiver retention	90	170	Newtons	No damage to transceiver below 90N
Cage retention (Latch strength)	180	N/A	Newtons	No damage to latch below 180N
Cage kickout spring force	11.5	22	Newtons	
Insertion / removal cycles, connector/cage	100	N/A	cycles	
Insertion / removal cycles, SFP transceiver	50	N/A	cycles	

A5. Labeling of SFP Transceivers

Color coding requirements for optical SFP transceivers are specified in Figure 1B.

Each SFP transceiver should be clearly labeled. The complete labeling need not be visible when the SFP transceiver is installed. Labeling should include appropriate manufacturing and part number identification, appropriate regulatory compliance labeling, and a clear specification of the external port characteristics. The external port characteristic label may include such information as optical wavelength, required fiber characteristics, operating data rate, interface standards supported, and link length supported.

A6. Bezel Design for Systems Using SFP Transceivers

Host enclosures that use SFP devices should provide appropriate clearances between the SFP transceivers to allow insertion and extraction without the use of special tools and a bezel enclosure with sufficient mechanical strength. For most systems a nominal centerline to centerline spacing of 16.25mm (0.640”) is sufficient. See Figure 5 for the recommended bezel design. For double-sided board mounting, a printed circuit board thickness of 3.0mm (0.118”) is required.

The SFP transceiver insertion slot should be clear of nearby moldings and covers that might block convenient access to the latching mechanisms, the SFP transceiver, or the cables connected to the SFP transceiver.

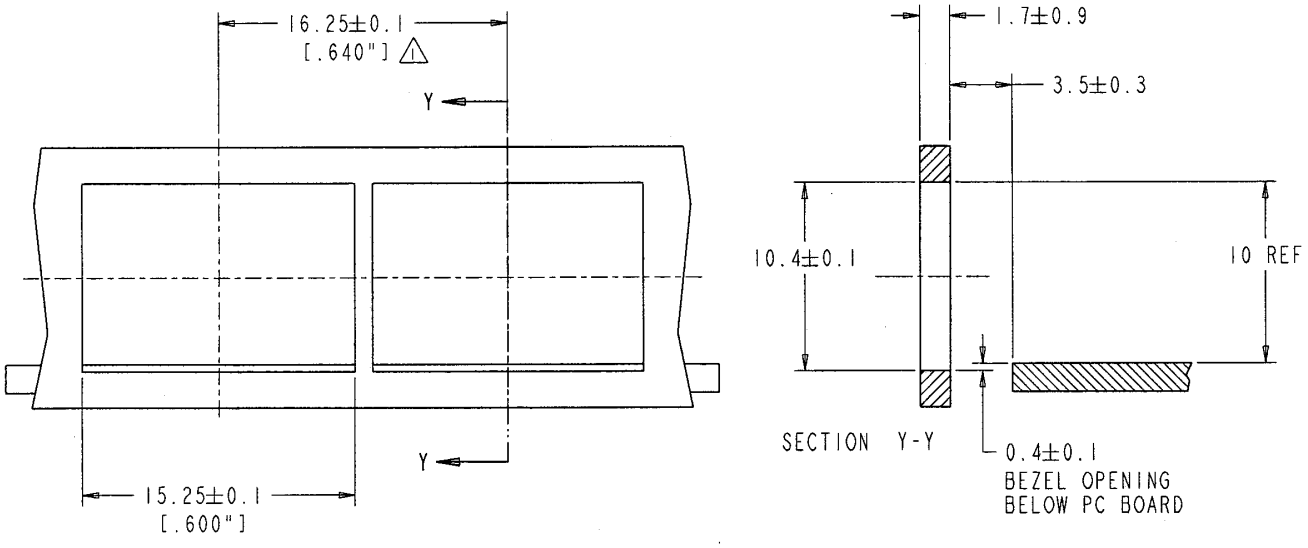

NOTES:

1. MINIMUM PITCH ILLUSTRATED, ENGLISH DIMENSIONS ARE FOR REFERENCE ONLY
2. NOT RECOMMENDED FOR PCI EXPANSION CARD APPLICATIONS

Figure 5. Recommended Bezel Design

A7. SFP Electrical Connector Mechanical Specifications

The SFP Connector is a 20-contact, right angle surface mount connector. It is described in Table 3 and Figure 6. The plating on the contacts is specified as follows:

- Contact area: 0.38 micrometers minimum hard gold over 2.54 micrometers minimum thick nickel
- Solder terminal area: gold flash or 2.54 micrometers tin lead plating over 2.54 minimum thick nickel.

Table 3. SFP Transceiver Connector Dimensions

Designator	Dimension (mm)	Tolerance (mm)	Comments
A	9.4	± 0.08	Connector card slot width
B	1.4	± 0.05	Guide pin diameter
C	11.2	Maximum	Connector width
D	9.2	Maximum	Connector length
E	3.5	Reference	Distance from centerline of connector to outer contact
F	3.9	Reference	Distance from centerline of connector to outer contact
G	1.35	Maximum	Connector card slot height
H	2.6	Minimum	Height from bottom of connector to bottom of card slot
J	9.6	TP	Distance between guide pins
K	0.9	Reference	Diamond guide pin width
L	1.4	± 0.05	Diamond guide pin length
M	5.4	Maximum	Connector height
N	0.8	Reference	Length of solder leads past housing, front & rear
P	6.0	Minimum	Depth of card slot from front face of housing
Q	3.0	Maximum	Depth of contact point from front face of connector
R	0.7	± 0.1	Size of chamfer on top face of connector
S	0.3	Reference	Distance boss extends past front face of connector
T	1.0	Minimum	Size of chamfer at entry of card slot, all around
U	4.5	Reference	Length from centerline of guide posts to end of solder lead

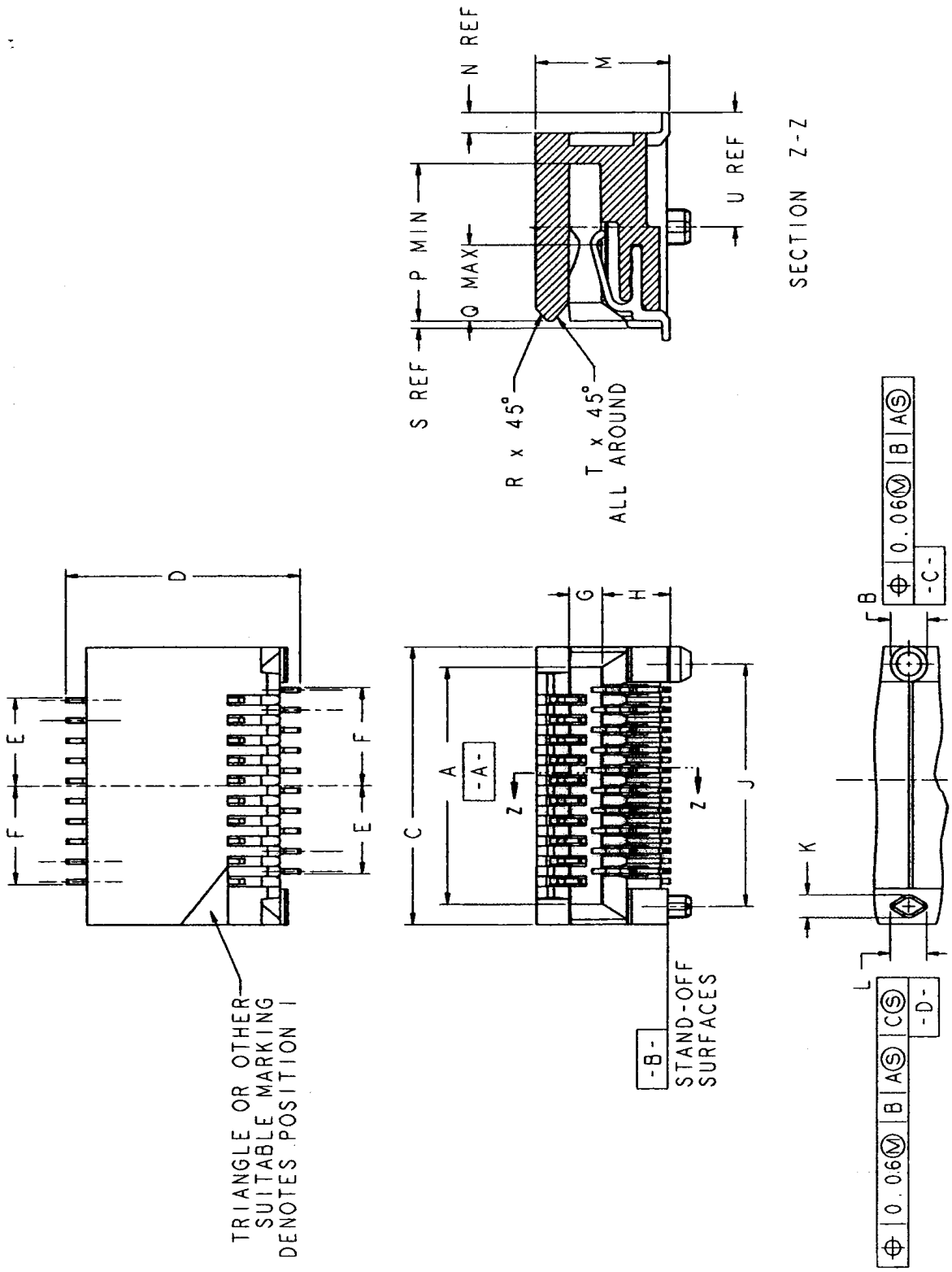

Figure 6. SFP Transceiver Connector Illustration

A8. SFP Cage Assembly Dimensions

The SFP Cage Assembly consists of two components: a lower cage that is soldered to the host board and a top cage that is assembled to the lower cage after soldering. A reference drawing describing the SFP Cage Assembly is provided in Table 4 and Figures 7A and 7B. The cage material is copper alloy and plating options are:

- Tin-lead plate 2.54 micrometers minimum over copper flash
- Tin plate 2.54 micrometers minimum over 0.76 micrometers minimum nickel

Table 4. Dimension Table for Drawing of SFP Cage Assembly

Designator	Dimension (mm)	Tolerance (mm)	Comments
A	48.8	Maximum	Overall length
B	8.3	Maximum	Length from inside top of cage to latch
C	14.0	± 0.1	Inside width of cage
D	14.25	Basic	Distance between solderleg centerlines on side of cage
E	0.249	± 0.025	Thickness of solderleg
F	9.0	Basic	Distance between vent holes along length
G	11.8	Basic	Distance from front of cage to beginning of center vent hole row
H	7.9	Basic	Distance between vent holes across the width of the cage
J	2.0	± 0.1	Diameter of vent holes
K	16.5	Basic	Distance from front of cage to solderleg
L	10.0	Basic	Distance between chassis ground solderlegs along side
M	0.6	± 0.1	Width of EMI pins
N	0.7	± 0.1	Width of all chassis ground solderlegs
P	2.0	Maximum	Width of solderleg shoulder
Q	1.25	Maximum	Length of solderleg
R	3.95	Basic	Distance from centerline of cage to centerline of chassis ground solderleg
S	1.45	Basic	Distance from centerline of cage to centerline of chassis ground solderleg
T	1.45	Basic	Distance from centerline of cage to centerline of chassis ground solderleg
U	4.8	Basic	Distance from centerline of cage to centerline of EMI pins
V	0.5	± 0.05	Width of EMI pins on top cage
W	9.2	± 0.15	Distance from inside top of cage to inside bottom surface of front section of cage assembly
X	9.8	Maximum	Maximum height of cage assembly from host board
Z	10.0	Basic	Distance between chassis ground solderlegs along side
AA	11.5	Basic	Distance from front of cage to solderleg
AB	7.5	Minimum	Length of 9.2 (W) dimension from front of cage
AC	15.0	Maximum	Maximum width of cage assembly
AD	13.9	Minimum	Minimum width of inside of cage
AE	8.95	± 0.15	Height of inside of cage assembly
AF	1.0	Minimum	Height of clearance slots
AG	2.4	Basic	Distance of clearance slots from cage centerline

Table 4. Dimension Table for Drawing of SFP Cage Assembly (Cont.)

Designator	Dimension (mm)	Tolerance (mm)	Comments
AH	3.0	± 0.1	Width of clearance slots
AJ	2.35	± 0.1	Distance from front of cage to latch opening
AK	2.8	± 0.1	Length of latch opening
AL	0.5	Minimum	Height of latch lead-in
AM	45.6	Maximum	Distance from front of cage to kickout spring
AN	35.0	Maximum	Distance from front of cage to end of cage floor
AP	0.7	± 0.1	Width of solderlegs that extend from floor of cage
AQ	5.1	Maximum	Width of latch
AR	3.0	± 0.05	Width of latch opening
AS	16.3	Basic	Front of cage to beginning of outer vent hole rows
AT	0.65	Maximum	Inside radius of cage, four places
AU	5.8	Minimum	Distance between panel ground spring supports
AV	12.7	Maximum recommended	Length of plug extending outside of the cage
AW	15.75	Maximum	Width of plug extending outside of the cage
AX	10.9	Maximum	Height of plug extending outside of the cage

A9. Dust / EMI Cover

The order to prevent contamination of the internal components and to optimize EMI performance, it is recommended that a Dust/EMI Plug be inserted into cage assemblies when no transceiver is present. The maximum dimensions of the Dust/EMI Cover are listed in Table 4 and the maximum size is illustrated in Figure 7A. The Dust/EMI Cover shall exert a maximum force of 4.0 Newtons per side to the inside surfaces of the cage. This force shall be measured as the force/side required to compress the Dust/EMI Cover's compliant feature(s) to the maximum dimensions listed in Table 4 (Illustrated in Figure 7A).

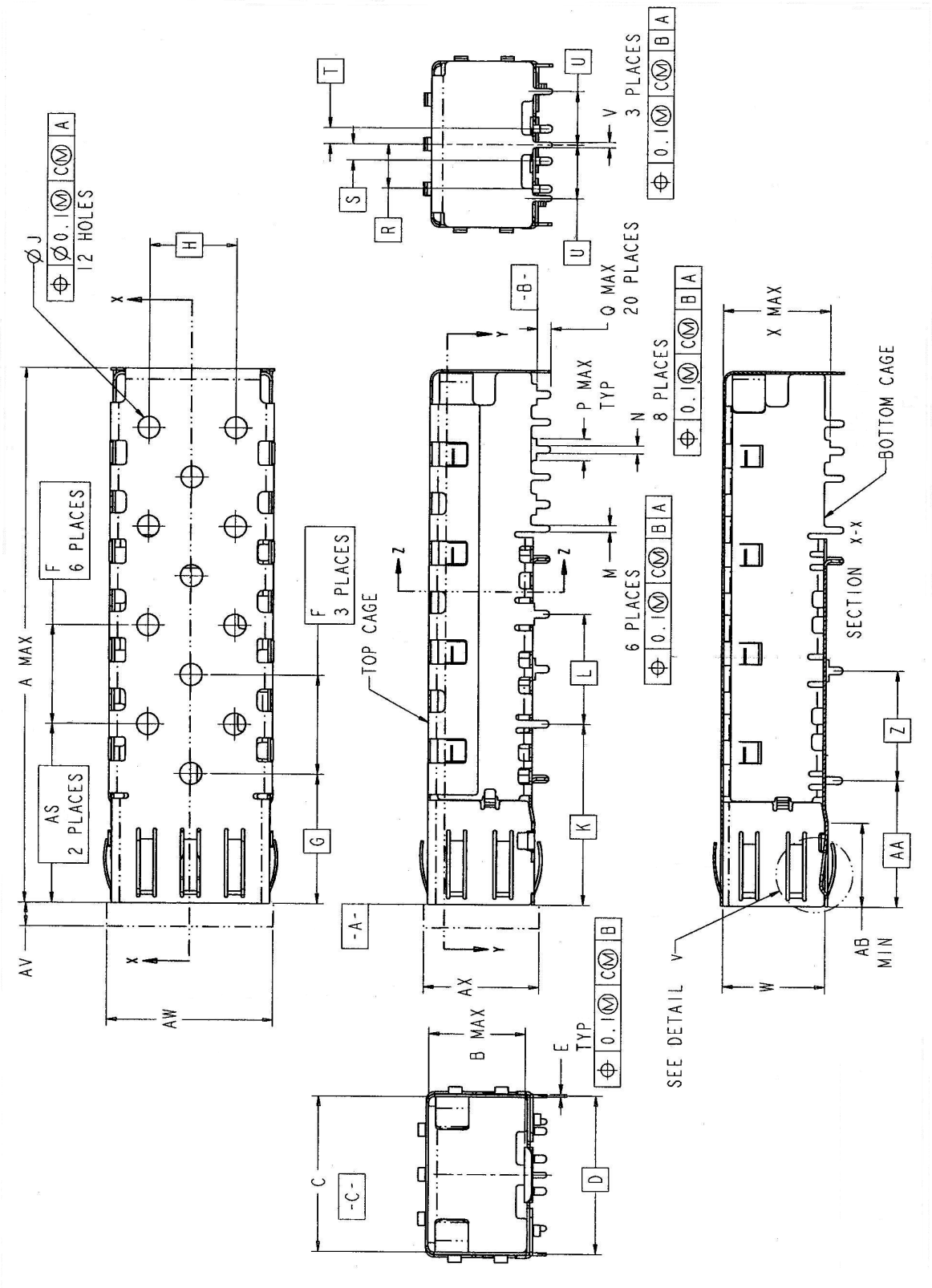

Figure 7A. SFP Cage Assembly

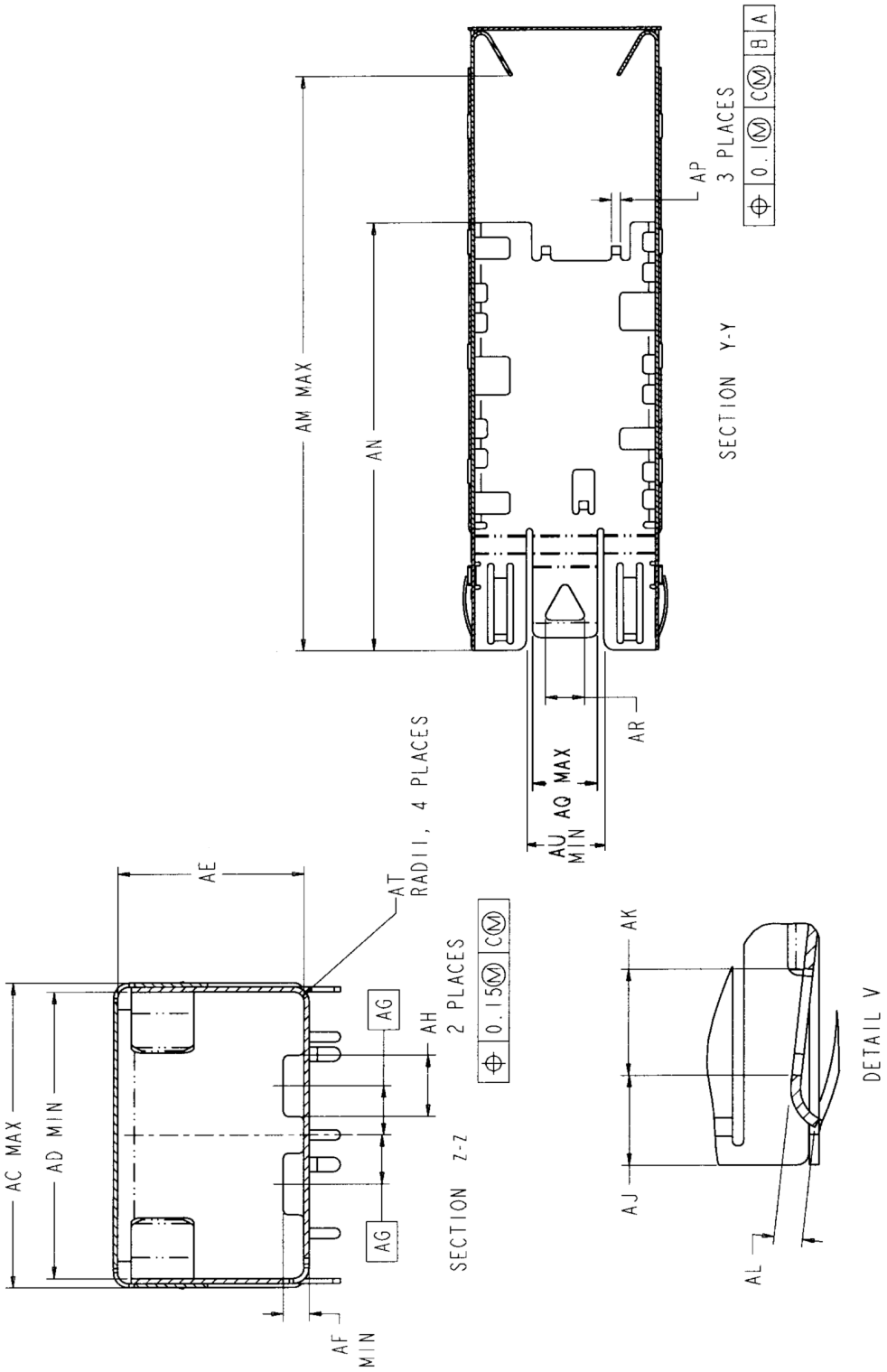

Figure 7B. SFP Cage Assembly (Cont.)

Appendix B. Electrical Interface

B1. Introduction

This annex contains pin definition data for the small form-factor pluggable (SFP) transceiver. The pin definition data is specific to gigabit rate datacom applications such as Fibre Channel and Gigabit Ethernet. It is expected that different pin definitions will be developed for SONET/ATM and lower data rate datacom applications.

B2. Pin Definitions

Figure 1 below shows the pin names and numbering for the connector block on the host board. The diagram is in the same relative orientation as the host board layout (see Appendix A, Figure 4.). As mentioned, this pinout only applies to gigabit rate datacom applications. The pin functions are defined in Table 1 and the accompanying notes. Figure 2A shows the recommended power supply filtering network. Figure 2B shows an example of a complete SFP host board schematic with connections to SerDes and protocol ICs. For EMI protection the signals to the 20-pin connector should be shut off when the transceiver is removed. Standard board layout practices such as connections to Vcc and GND with Vias, use of short- and equal-length differential signal lines, use of microstrip-lines and 50Ω terminations are recommended. Chassis grounds and external electromagnetic interference shields should not be attached to circuit ground.

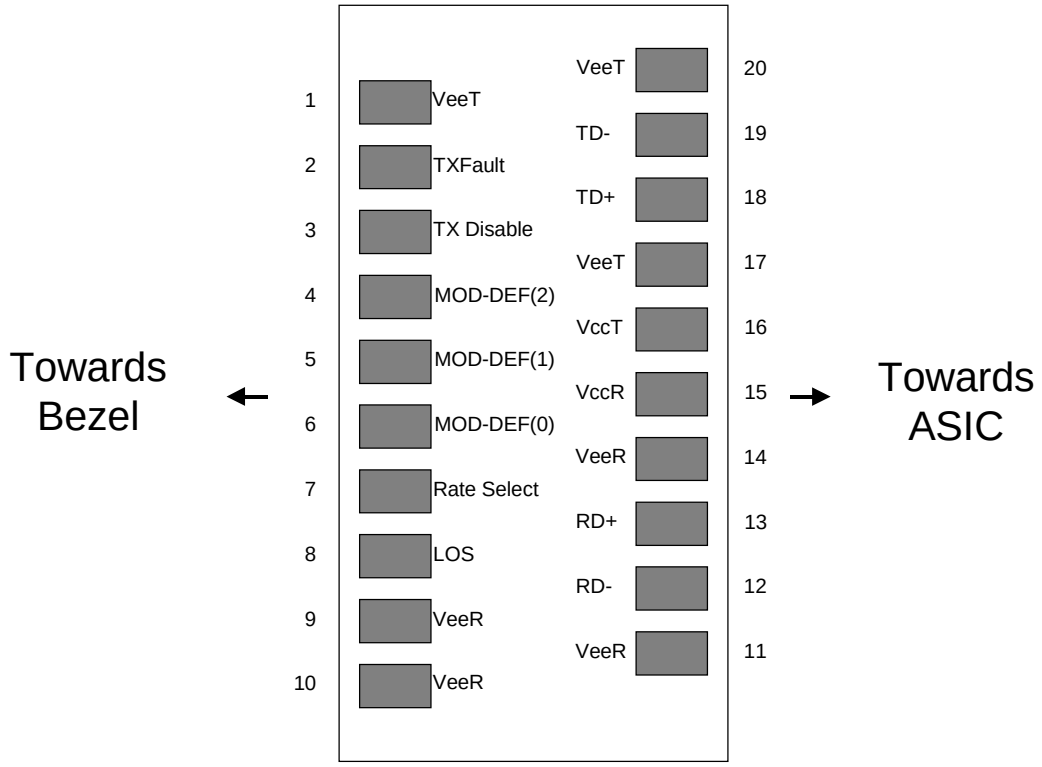

Figure 1. Diagram of Host Board Connector Block Pin Numbers and Names

Table 1. Pin Function Definitions

Pin Num.	Name	Function	Plug Seq.	Notes
1	VeeT	Transmitter Ground	1	
2	TX Fault	Transmitter Fault Indication	3	Note 1
3	TX Disable	Transmitter Disable	3	Note 2 Module disables on high or open
4	MOD-DEF2	Module Definition 2	3	Note 3, 2 wire serial ID interface
5	MOD-DEF1	Module Definition 1	3	Note 3, 2 wire serial ID interface
6	MOD-DEF0	Module Definition 0	3	Note 3, Grounded in Module
7	Rate Select	Select between full or reduced receiver bandwidth	3	Note 4 Low or Open – reduced bandwidth, High– full bandwidth
8	LOS	Loss of Signal	3	Note 5
9	VeeR	Receiver Ground	1	Note 6
10	VeeR	Receiver Ground	1	Note 6
11	VeeR	Receiver Ground	1	Note 6
12	RD-	Inv. Received Data Out	3	Note 7
13	RD+	Received Data Out	3	Note 7
14	VeeR	Receiver Ground	1	Note 6
15	VccR	Receiver Power	2	3.3 ± 5%, Note 8
16	VccT	Transmitter Power	2	3.3 ± 5%, Note 8
17	VeeT	Transmitter Ground	1	Note 6
18	TD+	Transmit Data In	3	Note 9
19	TD-	Inv. Transmit Data In	3	Note 9
20	VeeT	Transmitter Ground	1	Note 6

Plug Seq.: Pin engagement sequence during hot plugging.

1) TX Fault is an open collector/drain output, which should be pulled up with a 4.7K – 10KΩ resistor on the host board. Pull up voltage between 2.0V and VccT, R+0.3V. When high, output indicates a laser fault of some kind. Low indicates normal operation. In the low state, the output will be pulled to < 0.8V.

2) TX disable is an input that is used to shut down the transmitter optical output. It is pulled up within the module with a 4.7 – 10 KΩ resistor. Its states are:

Low (0 – 0.8V):	Transmitter on
(>0.8, < 2.0V):	Undefined
High (2.0 – 3.465V):	Transmitter Disabled
Open:	Transmitter Disabled

Table 1 Notes (Cont.)

3) Mod-Def 0,1,2. These are the module definition pins. They should be pulled up with a 4.7K – 10KΩ resistor on the host board. The pull-up voltage shall be VccT or VccR (see Section IV for further details).

   Mod-Def 0 is grounded by the module to indicate that the module is present
   Mod-Def 1 is the clock line of two wire serial interface for serial ID
   Mod-Def 2 is the data line of two wire serial interface for serial ID

4) This is an optional input used to control the receiver bandwidth for compatibility with multiple data rates (most likely Fibre Channel 1x and 2x Rates). If implemented, the input will be internally pulled down with > 30kΩ resistor. The input states are:

Low (0 – 0.8V):	Reduced Bandwidth
(>0.8 , < 2.0V):	Undefined
High (2.0 – 3.465V):	Full Bandwidth
Open:	Reduced Bandwidth

5) LOS (Loss of Signal) is an open collector/drain output, which should be pulled up with a 4.7K – 10KΩ resistor. Pull up voltage between 2.0V and VccT, R+0.3V. When high, this output indicates the received optical power is below the worst-case receiver sensitivity (as defined by the standard in use). Low indicates normal operation. In the low state, the output will be pulled to < 0.8V.

6) VeeR and VeeT may be internally connected within the SFP module.

7) RD-/+: These are the differential receiver outputs. They are AC coupled 100 Ω differential lines which should be terminated with 100 Ω (differential) at the user SERDES. The AC coupling is done inside the module and is thus not required on the host board. The voltage swing on these lines will be between 370 and 2000 mV differential (185 – 1000 mV single ended) when properly terminated.

8) VccR and VccT are the receiver and transmitter power supplies. They are defined as 3.3V ±5% at the SFP connector pin. Maximum supply current is 300 mA. Recommended host board power supply filtering is shown below. Inductors with DC resistance of less than 1Ω should be used in order to maintain the required voltage at the SFP input pin with 3.3V supply voltage. When the recommended supply filtering network is used, hot plugging of the SFP transceiver module will result in an inrush current of no more than 30 mA greater than the steady state value. VccR and VccT may be internally connected within the SFP transceiver module.

9) TD-/+: These are the differential transmitter inputs. They are AC-coupled, differential lines with 100Ω differential termination inside the module. The AC coupling is done inside the module and is thus not required on the host board. The inputs will accept differential swings of 500 – 2400 mV (250 – 1200 mV single-ended), though it is recommended that values between 500 and 1200 mV differential (250 – 600 mV single-ended) be used for best EMI performance.

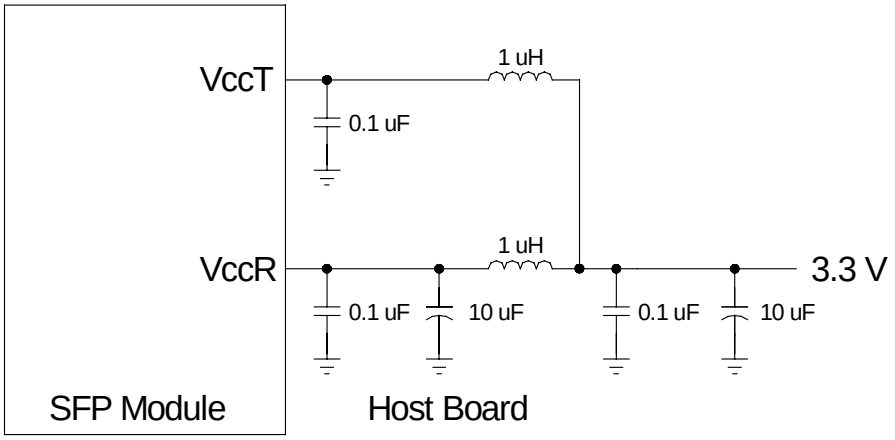

Figure 2A. Recommended Host Board Supply Filtering Network

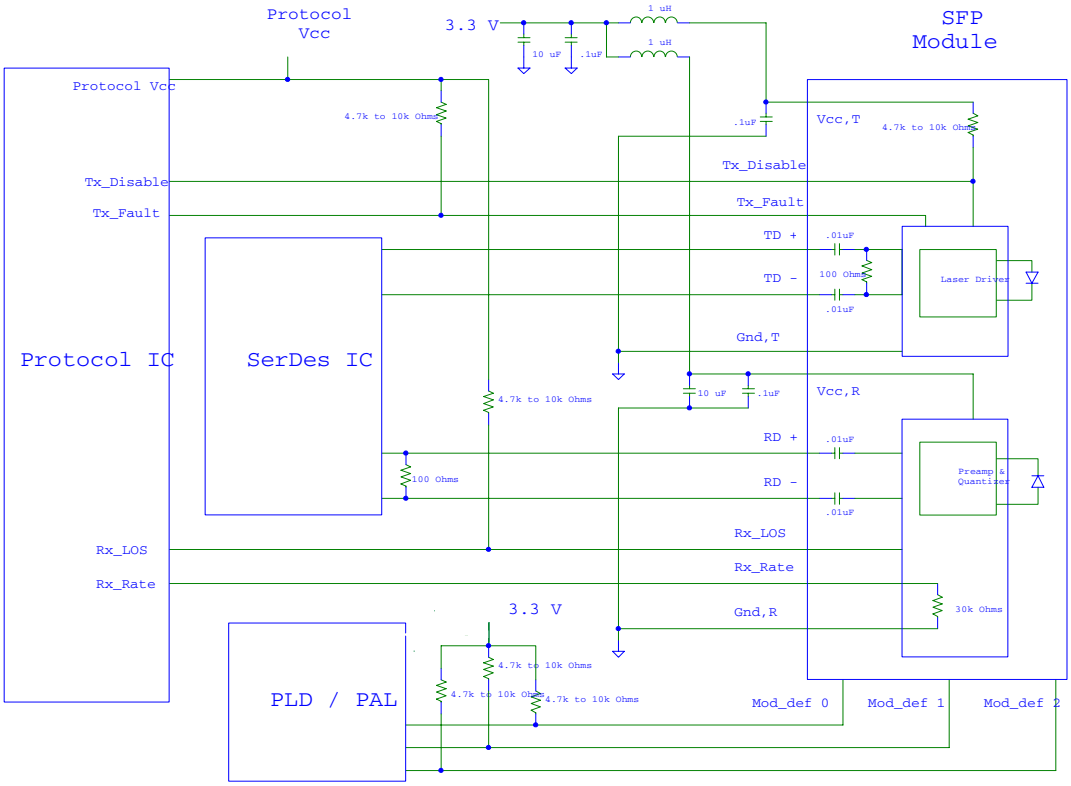

Figure 2B. Example SFP Host Board Schematic

B3. Timing Requirements of Control and Status I/O

The timing requirements of the control and status lines are drawn largely from the GBIC standard at the time of writing. They are summarized in Table 2 below:

Table 2. Timing Requirements of Control and Status I/0

Parameter	Symbol	Min	Max	Unit	Condition
TX Disable Assert Time	t_off		10	µs	Time from rising edge of TX Disable to when the optical output falls below 10% of nominal
TX Disable Negate Time	t_on		1	ms	Time from falling edge of TX Disable to when the modulated optical output rises above 90% of nominal
Time to initialize, including reset of TX_Fault	t_init		300	ms	From power on or negation of TX Fault using TX Disable
TX Fault Assert Time	t_fault		100	µs	Time from fault to TX fault on.
TX Disable to reset	t_reset	10		µs	Time TX Disable must be held high to reset TX_fault
LOS Assert Time	t_loss_on		100	µs	Time from LOS state to RX LOS assert
LOS Deassert Time	t_loss_off		100	µs	Time from non-LOS state to RX LOS deassert
Rate-Select Change Time	t_ratesel		10	µs	Time from rising or falling edge of Rate Select input until receiver bandwidth is in conformance with appropriate specification.
Serial ID Clock Rate	f_serial_clock		100	kHz	

SFP transceiver power on initialization procedure, TX_DISABLE negated.

During power on of the SFP transceiver, TX_FAULT, if implemented, may be asserted (High) as soon as power supply voltages are within specification. For transceiver initialization with TX_DISABLE negated, TX_FAULT shall be negated when the transmitter safety circuitry, if implemented, has detected that the transmitter is operating in its normal state. If a transmitter fault has not occurred, TX_FAULT shall be negated within a period t_init from the time that $V_{CC}T$ exceeds the specified minimum operating voltage (see Table 2). If TX_FAULT remains asserted beyond the period t_init, the host may assume that a transmission fault has been detected by the transceiver.

SFP transceiver power on initialization procedure, TX_DISABLE negated (Cont.)

If no transmitter safety circuitry is implemented, the TX_FAULT signal may be tied to its negated state.

The power-on initialization timing for a transceiver with TX_DISABLE negated is shown in Figure 3.

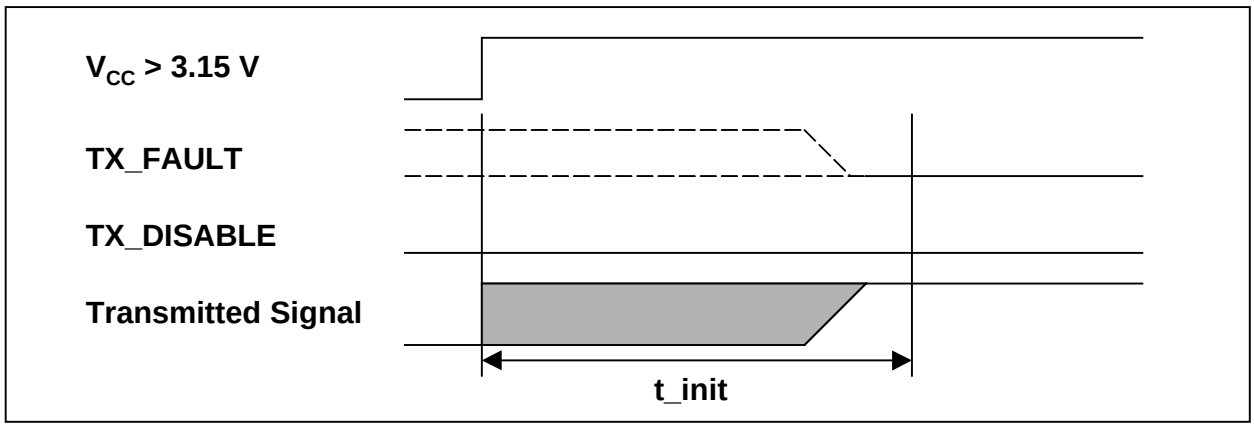

Figure 3. Power on initialization of SFP transceiver, TX_DISABLE negated

SFP transceiver power on initialization procedure, TX_DISABLE asserted.

For SFP transceiver power on initialization with TX_DISABLE asserted, the state of TX_FAULT is not defined while TX_DISABLE is asserted. After TX_DISABLE is negated, TX_FAULT may be asserted while safety circuit initialization is performed. TX_FAULT shall be negated when the transmitter safety circuitry, if implemented, has detected that the transmitter is operating in its normal state. If a transmitter fault has not occurred, TX_FAULT shall be negated within a period t_init from the time that TX_DISABLE is negated. If TX_FAULT remains asserted beyond the period t_init, the host may assume that a transmission fault has been detected by the transceiver.

If no transmitter safety circuitry is implemented, the TX_FAULT signal may be tied to its negated state. The power-on initialization timing for a SFP transceiver with TX_DISABLE asserted is shown in Figure 4.

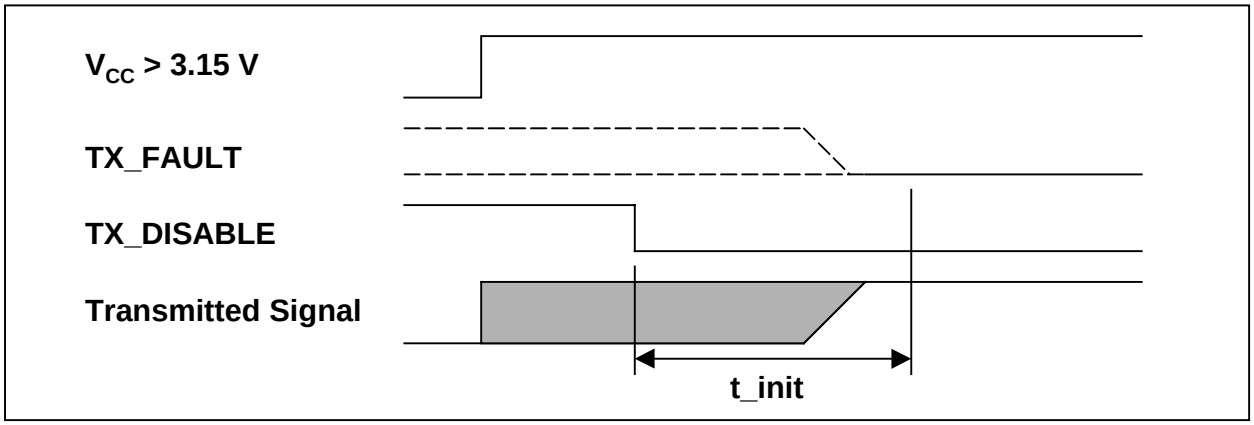

Figure 4. Power on initialization of SFP, TX_DISABLE asserted Initialization during hot plugging of SFP TRANSCEIVER.

When a transceiver is not installed, TX_FAULT is held to the asserted state by the pull up circuits on the host. As the SFP transceiver is installed, contact is made with the ground, voltage, and signal contacts in the specified order. After the SFP has determined that $V_{CC}T$ has reached the specified value, the power on initialization takes place as described in the above sections. An example of initialization during hot plugging is provided in Figure 5.

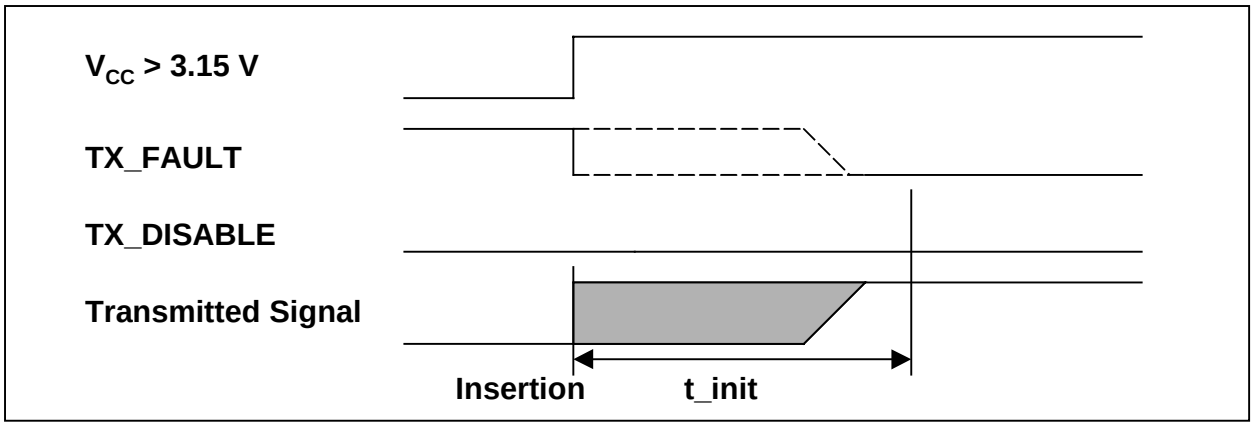

Figure 5. Example of initialization during hot plugging, TX_DISABLE negated.

SFP transmitter management

The timing requirements for the management of optical outputs from the SFP transceiver using the TX_DISABLE signal are shown in Figure 6. Note that the t on time refers to the maximum delay until the modulated optical signal reaches 90% of the final value, not just the average optical power.

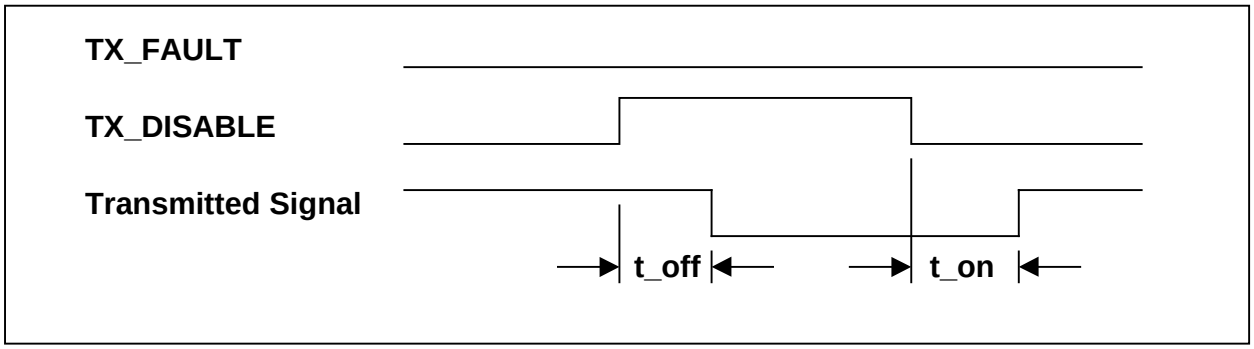

Figure 6. SFP TX_DISABLE timing during normal operation.

SFP transceiver fault detection and presentation

TX_FAULT shall be implemented by those module definitions of SFP transceiver supporting safety circuitry. If TX_FAULT is not implemented, the signal shall be held to the low state by the SFP transceiver.

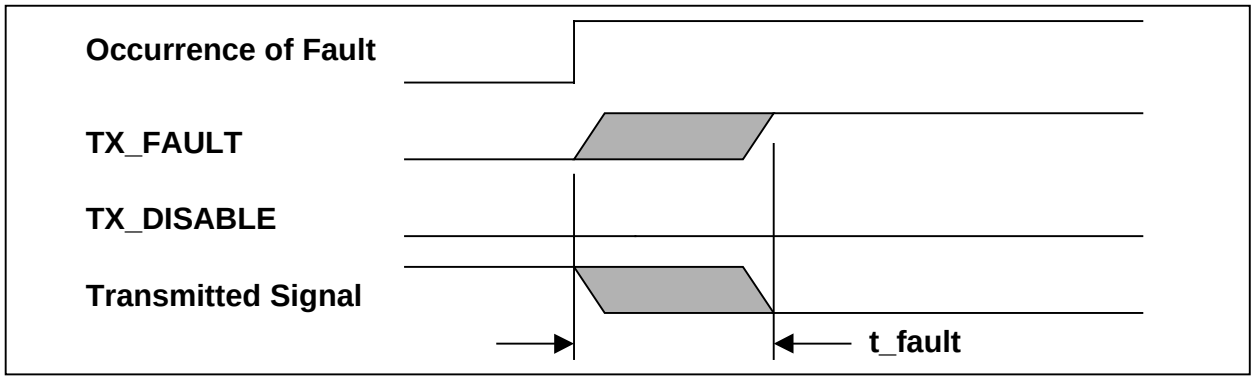

Figure 7. Detection of transmitter safety fault condition

SFP transceiver fault recovery

The detection of a safety-related transmitter fault condition presented by TX_FAULT shall be latched. The following protocol may be used to reset the latch in case the transmitter fault condition is transient. To reset the fault condition and associated detection circuitry, TX_DISABLE shall be asserted for a minimum of t_reset. TX_DISABLE shall then be negated. In less than the maximum value of t_init the optical transmitter will correctly reinitialize the laser circuits, negate TX_FAULT, and begin normal operation if the fault condition is no longer present. If a fault condition is detected during the reinitialization, TX_FAULT shall again be asserted, the fault condition again latched, and the optical transmitter circuitry will again be disabled until the next time a reset protocol is attempted. The manufacturer of the SFP shall ensure that the optical power emitted from an open connector or fiber is compliant with IEC825-1 and CDRH during all reset attempts, during normal operation or upon the occurrence

SFP transceiver fault recovery (Cont.)

of reasonable single fault conditions. The SFP transceiver may require internal protective circuitry to prevent the frequent assertion of the TX_DISABLE signal from generating frequent pulses of energy that violate the safety requirements. The timing for successful recovery from a transient safety fault condition is shown in Figure 8.

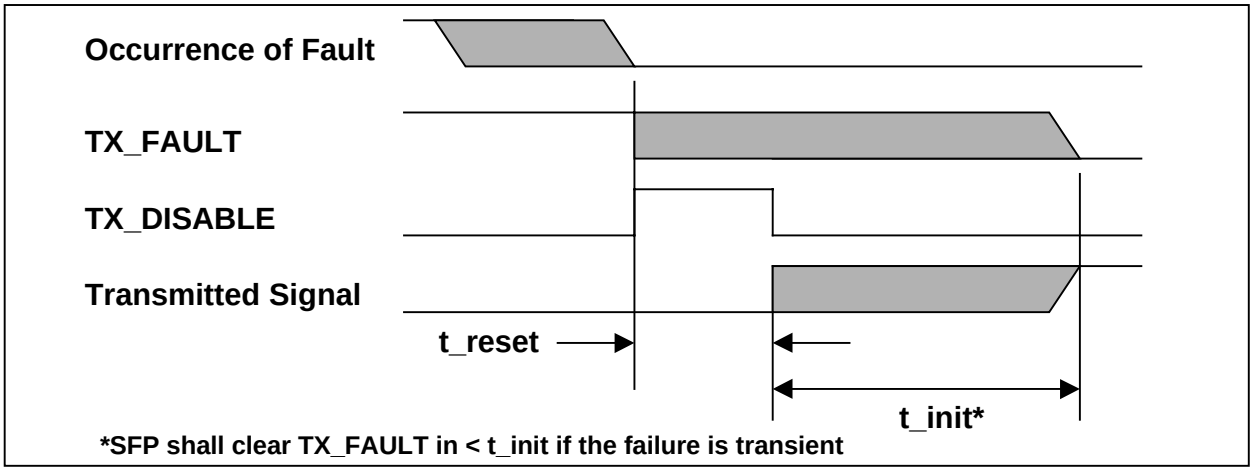

Figure 8. Successful recovery from transient safety fault condition

An example of an unsuccessful recovery, where the fault condition was not transient, is shown in Figure 9.

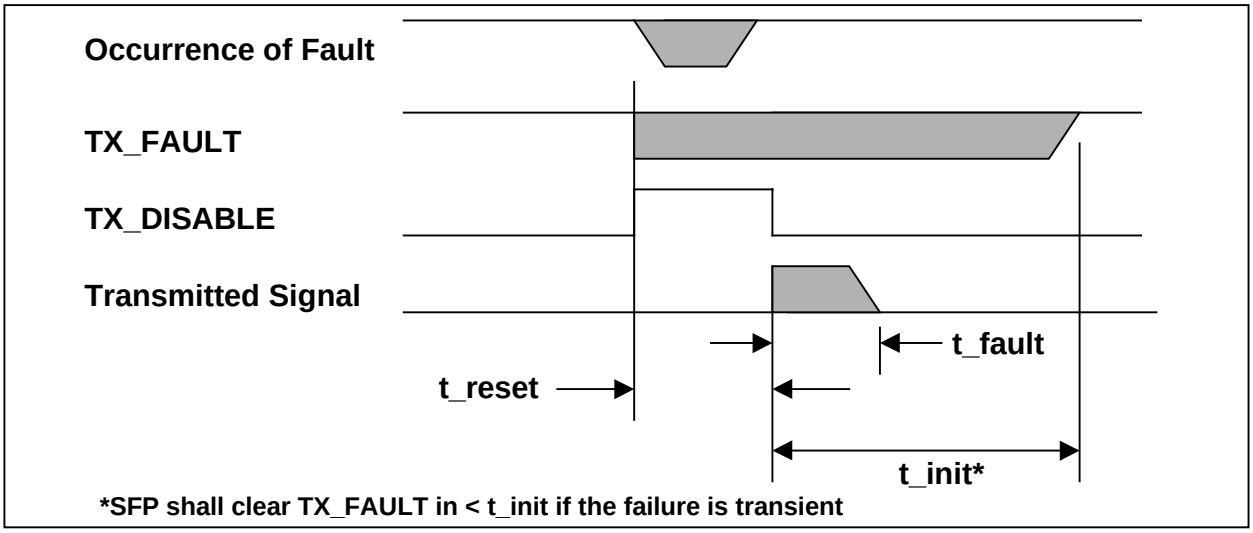

Figure 9. Unsuccessful recovery from safety fault condition

SFP transceiver loss of signal indication

The LOS signal is intended as a preliminary indication to the system in which the SFP transceiver is installed that the link signals are likely to be outside the required values for proper operation. Such indications typically point to non-installed cables, broken cables, or a disabled, failing or powered off transmitter at the far end of the cable. Additional indications are provided by the system in which the SFP transceiver is installed to verify that the information being transmitted is valid, correctly encoded, and in the correct format. Such additional indications are outside the scope of the SFP TRANSCEIVER MSA.

The timing of the LOS function is specified in Figure 10.

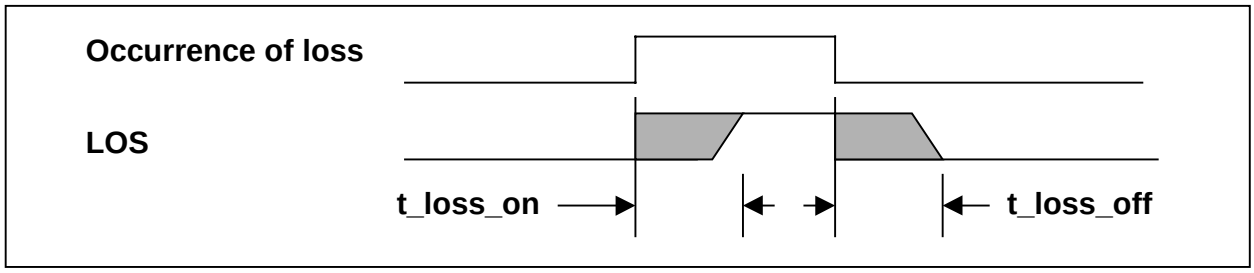

Figure 10. Timing of LOS detection

B4. Module Definition Interface and Data Field Description

The definition of the MOD-DEF function is drawn largely from the GBIC standard with some small, but backwards compatible, changes to the fields or allowed values to reflect the latest standards and expectations for these transceivers. In some cases, this backward compatibility approach results in the possibility of illegal combinations (such as defining an SFP module with SC optical connectors). Some locations previously reserved in the GBIC serial identification have now been defined.

It should be noted that only the serial module definition and the basic Mod-Def 0 indication of module present are implemented. The use of MOD DEF lines as static codes for module definition as done with GBIC are not implemented.

Overview

The SFP serial ID provides access to sophisticated identification information that describes the transceiver's capabilities, standard interfaces, manufacturer, and other information. The serial interface uses the 2-wire serial CMOS E^2PROM protocol defined for the ATMEL AT24C01A/02/04 family of components.

When the serial protocol is activated, the host generates the serial clock signal (SCL, Mod Def 1). The positive edge clocks data into those segments of the E^2PROM that are not write-protected within the SFP transceiver. The negative edge clocks data from the SFP transceiver.

The serial data signal (SDA, Mod Def 2) is bi-directional for serial data transfer. The host uses SDA in conjunction with SCL to mark the start and end of serial protocol activation. The memories are organized as a series of 8-bit data words that can be addressed individually or sequentially.

This section defines the information structures that are obtained from the SFP transceiver via the serial ID.

A SFP transceiver shall meet the electrical and optical requirements, including amplitude, eye diagram, jitter, and other parameters, specified for the standards with which the transceiver claims compliance.

Serial information definition

The 2-wire serial CMOS E^2PROM provides sequential or random access to 8 bit parameters, addressed from 0000h to the maximum address of the memory. The address select pins for the serial CMOS E^2PROM shall be set to zero (fixed at the V_{IL} low level). The fields specified by this section shall not be written by the host in which it is installed. The SFP transceiver may enforce this by using the write protect features of the CMOS E^2PROM.

Serial information definition (Cont.)

The word address is transmitted with the high order bit transmitted first. The protocol for the 2-wire serial interface sequentially transmits one or more 8-bit bytes, with the data byte addressed by the lowest word address transmitted first. In each data byte, the high order bit (bit 7 in the accompanying tables) is transmitted first.

Numeric fields are expressed in binary, with the high order byte being transferred first and the high order bit of each byte being transferred first. Numeric fields are padded on the left with binary zero values.

Character strings are ordered with the first character to be displayed located in the lowest word address of the string. Each character shall be coded as a US-ASCII character as defined by ISO 8859-1, with the high order bit transmitted first. All character strings will be padded on the right with ASCII spaces (20h) to fill empty bytes.

All bits of reserved fields shall be set to zero until future definitions require their use.

A minimum of 96 bytes shall be readable by the serial identification process.

The maximum clock rate of the serial interface shall be 100 KHz.

The following tables define the contents of the serial CMOS E^2PROM. The first table is a summary of all the data fields in the serial ID chip. The remaining tables contain detailed descriptions of the individual data fields.

Table 3.1. Serial ID: Data Fields

Data Address	Field Size (Bytes)	Name of field	Description of field
BASE ID FIELDS			
0	1	Identifier	Type of serial transceiver (see Table 3.2)
1	1	Ext. Identifier	Extended identifier of type of serial transceiver
2	1	Connector	Code for connector type (see Table 3.3)
3-10	8	Transceiver	Code for electronic compatibility or optical compatibility (see Table 3.4)
11	1	Encoding	Code for serial encoding algorithm (see Table 3.5)
12	1	BR, Nominal	Nominal bit rate, units of 100 MBits/sec.
13	1	Reserved	
14	1	Length(9m) - km	Link length supported for 9/125 mm fiber, units of km
15	1	Length (9m)	Link length supported for 9/125 mm fiber, units of 100 m
16	1	Length (50m)	Link length supported for 50/125 mm fiber, units of 10 m
17	1	Length (62.5m)	Link length supported for 62.5/125 mm fiber, units of 10 m
18	1	Length (Copper)	Link length supported for copper, units of meters
19	1	Reserved	
20-35	16	Vendor name	SFP transceiver vendor name (ASCII)
36	1	Reserved	
37-39	3	Vendor OUI	SFP transceiver vendor IEEE company ID
40-55	16	Vendor PN	Part number provided by SFP transceiver vendor (ASCII)
56-59	4	Vendor rev	Revision level for part number provided by vendor (ASCII)
60-62	3	Reserved	
63	1	CC_BASE	Check code for Base ID Fields (addresses 0 to 62)
EXTENDED ID FIELDS			
64-65	2	Options	Indicates which optional SFP signals are implemented (see Table 3.6)
66	1	BR, max	Upper bit rate margin, units of %
67	1	BR, min	Lower bit rate margin, units of %
68-83	16	Vendor SN	Serial number provided by vendor (ASCII)
84-91	8	Date code	Vendor's manufacturing date code (see Table 3.7)
92-94	3	Reserved	
95	1	CC_EXT	Check code for the Extended ID Fields (addresses 64 to 94)
VENDOR SPECIFIC ID FIELDS			
96-127	32	Read-only	Vendor specific data, read only
128-511	384	Reserved	
512-n			Vendor specific

Identifier

The identifier value specifies the physical device described by the serial information. This value shall be included in the serial data. The defined identifier values are shown in Table 3.2.

Table 3.2. Identifier Values

Value	Description of Physical Device
00h	Unknown or unspecified
01h	GBIC
02h	Module/connector soldered to motherboard
03h	SFP transceiver
04-7Fh	Reserved
80-FFh	Vendor specific

Extended Identifier

The field should be set to 04h for all SFP modules indicating serial ID module definition.

Connector

The Connector value indicates the external connector provided on the interface. This value shall be included in the serial data. The defined connector values are shown in Table 3.3. Note that 01h – 05h are not SFP compatible, and are included for compatibility with GBIC standards

TABLE 3.3. Connector Values

Value	Description of Connector
00h	Unknown or unspecified
01h	SC
02h	Fibre Channel Style 1 copper connector
03h	Fibre Channel Style 2 copper connector
04h	BNC/TNC
05h	Fibre Channel coaxial headers
06h	FiberJack
07h	LC
08h	MT-RJ
09h	MU
0Ah	SG
0Bh	Optical pigtail
0C-1Fh	Reserved
20h	HSSDC II
21h	Copper Pigtail
22h-7Fh	Reserved
80-FFh	Vendor specific

Transceiver

The following bit significant indicators define the electronic or optical interfaces that are supported by the SFP transceiver. At least one bit shall be set in this field. For Fibre Channel SFPs, the Fibre Channel speed, transmission media, transmitter technology, and distance capability shall all be indicated.

Table 3.4. Transceiver codes

Data Addr	Bit[1]	Description of transceiver	Data Addr	Bit[1]	Description of transceiver
Reserved Standard Compliance Codes			Fibre Channel link length		
3	7-0	Reserved	7	7	very long distance (V)
4	7-4	Reserved	7	6	short distance (S)
SONET Compliance Codes			7	5	intermediate distance (I)
4	3	Reserved	7	4	long distance (L)
4	2	OC 48, long reach	Fibre Channel transmitter technology		
4	1	OC 48, intermediate reach	7	3-2	Reserved
4	0	OC 48 short reach	7	1	Longwave laser (LC)
5	7	Reserved	7	0	Electrical inter-enclosure (EL)
5	6	OC 12, single mode long reach	8	7	Electrical intra-enclosure (EL)
5	5	OC 12, single mode inter. reach	8	6	Shortwave laser w/o OFC (SN)
5	4	OC 12 multi-mode short reach	8	5	Shortwave laser w/ OFC (SL)
5	3	Reserved	8	4	Longwave laser (LL)
5	2	OC 3, single mode long reach	8	0-3	Reserved
5	1	OC 3, single mode inter. reach			
5	0	OC 3, multi-mode short reach	Fibre Channel transmission media		
			9	7	Twin Axial Pair (TW)
			9	6	Shielded Twisted Pair (TP)
			9	5	Miniature Coax (MI)
Gigabit Ethernet Compliance Codes			9	4	Video Coax (TV)
6	7-4	Reserved	9	3	Multi-mode, 62.5m (M6)
6	3	1000BASE-T	9	2	Multi-mode, 50 m (M5)
6	2	1000BASE-CX	9	1	Reserved
6	1	1000BASE-LX	9	0	Single Mode (SM)
6	0	1000BASE-SX			
			Fibre Channel speed		
			10	7-5	Reserved
			10	4	400 MBytes/Sec
			10	3	Reserved
			10	2	200 MBytes./Sec
			10	1	Reserved
			10	0	100 MBytes/Sec

[1] Bit 7 is the high order bit and is transmitted first in each byte.

Encoding

The encoding value indicates the serial encoding mechanism that is the nominal design target of the particular SFP transceiver. The value shall be contained in the serial data. The defined encoding values are shown in Table 3.5.

Table 3.5. Encoding codes

code	Description of encoding mechanism
00h	Unspecified
01h	8B10B
02h	4B5B
03h	NRZ
04h	Manchester
05h -FFh	Reserved

BR, nominal

The nominal bit rate (BR, nominal) is specified in units of 100 Megabits per second, rounded off to the nearest 100 Megabits per second. The bit rate includes those bits necessary to encode and delimit the signal as well as those bits carrying data information. A value of 0 indicates that the bit rate is not specified and must be determined from the transceiver technology. The actual information transfer rate will depend on the encoding of the data, as defined by the encoding value.

Length (9m)-km

Addition to EEPROM data from original GBIC definition. This value specifies the link length that is supported by the SFP transceiver while operating in compliance with the applicable standards using single mode fiber. The value is in units of kilometers. A value of 255 means that the transceiver supports a link length greater than 254 km. A value of zero means that the transceiver does not support single mode fiber or that the length information must be determined from the transceiver technology.

Length (9m)

This value specifies the link length that is supported by the SFP transceiver while operating in compliance with the applicable standards using single mode fiber. The value is in units of 100 meters. A value of 255 means that the transceiver supports a link length greater than 25.4 km. A value of zero means that the SFP transceiver does not support single mode fiber or that the length information must be determined from the transceiver technology.

Length (50m)

This value specifies the link length that is supported by the SFP transceiver while operating in compliance with the applicable standards using 50 micron multi-mode fiber. The value is in units of 10 meters. A value of 255 means that the SFP transceiver supports a link length greater than 2.54 km. A value of zero means that the transceiver does not support 50 micron multi-mode fiber or that the length information must be determined from the transceiver technology.

Length (62.5m)

This value specifies the link length that is supported by the SFP transceiver while operating in compliance with the applicable standards using 62.5 micron multi-mode fiber. The value is in units of 10 meters. A value of 255 means that the SFP transceiver supports a link length greater than 2.54 km. A value of zero means that the SFP transceiver does not 62.5 micron multi-mode fiber or that the length information must determined from the transceiver technology. It is common for the SFP transceiver to support both 50 micron and 62.5 micron fiber.

Length (Copper)

This value specifies the minimum link length that is supported by the SFP transceiver while operating in compliance with the applicable standards using copper cable. The value is in units of 1 meter. A value of 255 means that the SFP transceiver supports a link length greater than 254 meters. A value of zero means that the SFP transceiver does not support copper cables or that the length information must be determined from the transceiver technology. Further information about the cable design, equalization, and connectors is usually required to guarantee meeting a particular length requirement.

Vendor name

The vendor name is a 16 character field that contains ASCII characters, left-aligned and padded on the right with ASCII spaces (20h). The vendor name shall be the full name of the corporation, a commonly accepted abbreviation of the name of the corporation, the SCSI company code for the corporation, or the stock exchange code for the corporation. At least one of the vendor name or the vendor OUI fields shall contain valid serial data.

Vendor OUI

The vendor organizationally unique identifier field (vendor OUI) is a 3-byte field that contains the IEEE Company Identifier for the vendor. A value of all zero in the 3-byte field indicates that the Vendor OUI is unspecified.

Vendor PN

The vendor part number (vendor PN) is a 16-byte field that contains ASCII characters, left-aligned and padded on the right with ASCII spaces (20h), defining the vendor part number or product name. A value of all zero in the 16-byte field indicates that the vendor PN is unspecified.

Vendor Rev

The vendor revision number (vendor rev) is a 4-byte field that contains ASCII characters, left-aligned and padded on the right with ASCII spaces (20h), defining the vendor's product revision number. A value of all zero in the 4-byte field indicates that the vendor Rev is unspecified.

CC_BASE

The check code is a one byte code that can be used to verify that the first 64 bytes of serial information in the SFP transceiver is valid. The check code shall be the low order 8 bits of the sum of the contents of all the bytes from byte 0 to byte 62, inclusive.

Options

The bits in the option field shall specify the options implemented in the SFP transceiver as described in Table 3.6.

Table 3.6. Option Values

data address	bit	Description of option
64	7-0	Reserved
65	7-6	Reserved
65	5	RATE_SELECT is implemented If bit is set then active control of the rate select pin is required to change rates. If bit is not set, no control of pin is required. In all cases, compliance with multiple rate standards should be determined by Transceiver Codes in Bytes 4, 5, 6 and 10. (See Table 3.4)
65	4	TX_DISABLE is implemented and disables the serial output.
65	3	TX_FAULT signal implemented. (Reset defined in section III)
65	2	Loss of Signal implemented, signal inverted from definition in Table 1 NOTE: This is not standard SFP transceiver behavior and should be avoided, since non-interoperable behavior results.
65	1	Loss of Signal implemented, signal as defined in Table 1
65	0	Reserved

BR, max

The upper bit rate limit at which the SFP transceiver will still meet its specifications (BR, max) is specified in units of 1% above the nominal bit rate. A value of zero indicates that this field is not specified.

BR, min

The lower bit rate limit at which the SFP transceiver will still meet its specifications (BR, min) is specified in units of 1% below the nominal bit rate. A value of zero indicates that this field is not specified.

Vendor SN

The vendor serial number (vendor SN) is a 16 character field that contains ASCII characters, left-aligned and padded on the right with ASCII spaces (20h), defining the vendor's serial number for the SFP transceiver. A value of all zero in the 16-byte field indicates that the vendor SN is unspecified.

Date Code

The date code is an 8-byte field that contains the vendor's date code in ASCII characters. The date code is mandatory. The date code shall be in the format specified by Table 3.7.

Table 3.7. Date Code

Data Address	Description of field
84-85	ASCII code, two low order digits of year. (00 = 2000).
86-87	ASCII code, digits of month (01 = Jan through 12 = Dec)
88-89	ASCII code, day of month (01 - 31)
90-91	ASCII code, vendor specific lot code, may be blank

CC_EXT

The check code is a one byte code that can be used to verify that the first 32 bytes of extended serial information in the SFP transceiver is valid. The check code shall be the low order 8 bits of the sum of the contents of all the bytes from byte 64 to byte 94, inclusive.

Read-only

This area may contain vendor specific information which can be read from the SFP transceiver. The data is read only.