UNITED STATES PATENT AND TRADEMARK OFFICE

UNITED STATES DEPARTMENT OF COMMERCE
United States Patent and Trademark Office
Address: COMMISSIONER FOR PATENTS
P.O. Box 1450
Alexandria, Virginia 22313-1450
www.uspto.gov

APPLICATION NO.	ISSUE DATE	PATENT NO.	ATTORNEY DOCKET NO.	CONFIRMATION NO.
12/512,968	05/10/2016	9337948	UBI-002C	6685

93749 7590 04/20/2016

Alexander Soto
7673 Hazard Center Dr.
San Diego, CA 92108

ISSUE NOTIFICATION

The projected patent number and issue date are specified above.

Determination of Patent Term Adjustment under 35 U.S.C. 154 (b)
(application filed on or after May 29, 2000)

The Patent Term Adjustment is 1834 day(s). Any patent to issue from the above-identified application will include an indication of the adjustment on the front page.

If a Continued Prosecution Application (CPA) was filed in the above-identified application, the filing date that determines Patent Term Adjustment is the filing date of the most recent CPA.

Applicant will be able to obtain more detailed information by accessing the Patent Application Information Retrieval (PAIR) WEB site (http://pair.uspto.gov).

Any questions regarding the Patent Term Extension or Adjustment determination should be directed to the Office of Patent Legal Administration at (571)-272-7702. Questions relating to issue and publication fee payments should be directed to the Application Assistance Unit (AAU) of the Office of Data Management (ODM) at (571)-272-4200.

APPLICANT(s) (Please see PAIR WEB site http://pair.uspto.gov for additional applicants):

Alexander I. Soto, San Diego, CA;
Walter G. Soto, San Clemente, CA;

The United States represents the largest, most dynamic marketplace in the world and is an unparalleled location for business investment, innovation, and commercialization of new technologies. The USA offers tremendous resources and advantages for those who invest and manufacture goods here. Through SelectUSA, our nation works to encourage and facilitate business investment. To learn more about why the USA is the best country in the world to develop technology, manufacture products, and grow your business, visit SelectUSA.gov.

IR103 (Rev. 10/09)

PTO/SB/08a (07-09)
Approved for use through 07/31/2012. OMB 0651-0031
U.S. Patent and Trademark Office; U.S. DEPARTMENT OF COMMERCE
Under the Paperwork Reduction Act of 1995, no persons are required to respond to a collection of information unless it contains a valid OMB control number.

Substitute for form 1449/PTO

INFORMATION DISCLOSURE STATEMENT BY APPLICANT

(Use as many sheets as necessary)

Sheet 1 of 1

Complete if Known	
Application Number	
Filing Date	July 28, 2009
First Named Inventor	Soto, et al.
Art Unit	
Examiner Name	
Attorney Docket Number	UBI-002C

U. S. PATENT DOCUMENTS

Examiner Initials*	Cite No.[1]	Document Number Number-Kind Code[2] (if known)	Publication Date MM-DD-YYYY	Name of Patentee or Applicant of Cited Document	Pages, Columns, Lines, Where Relevant Passages or Relevant Figures Appear
	1	US- 5150247	09-22-1992	Sharpe et al.	
	2	US- 6950477	09-27-2005	Meehan et al.	
	3	US- 6067319	05-23-2000	Copeland, Gregory Clark	
	4	US- 5363408	11-08-1994	Paik et al.	
	5	US- 5880863	03-09-1999	Rideout et al.	
	6	US- 6490727	12-03-2002	~~Strolle et al.~~ Nazarathy et al.	
	7	US- 7242868	07-10-2007	Soto et al.	
	8	US- 20080166124	07-10-2008	Soto et al.	
		US-			
		US-			
		US-			
		US-			
		US-			
		US-			
		US-			
		US-			
		US-			
		US-			
		US-			

Change(s) applied to document, /B.H.H./ 2/10/2016

FOREIGN PATENT DOCUMENTS

Examiner Initials*	Cite No.[1]	Foreign Patent Document Country Code[3]-Number[4]-Kind Code[5] (if known)	Publication Date MM-DD-YYYY	Name of Patentee or Applicant of Cited Document	Pages, Columns, Lines, Where Relevant Passages Or Relevant Figures Appear	T[6]

Examiner Signature		Date Considered	

*EXAMINER: Initial if reference considered, whether or not citation is in conformance with MPEP 609. Draw line through citation if not in conformance and not considered. Include copy of this form with next communication to applicant. [1] Applicant's unique citation designation number (optional). [2] See Kinds Codes of USPTO Patent Documents at www.uspto.gov or MPEP 901.04. [3] Enter Office that issued the document, by the two-letter code (WIPO Standard ST.3). [4] For Japanese patent documents, the indication of the year of the reign of the Emperor must precede the serial number of the patent document. [5] Kind of document by the appropriate symbols as indicated on the document under WIPO Standard ST.16 if possible. [6] Applicant is to place a check mark here if English language Translation is attached.

This collection of information is required by 37 CFR 1.97 and 1.98. The information is required to obtain or retain a benefit by the public which is to file (and by the USPTO to process) an application. Confidentiality is governed by 35 U.S.C. 122 and 37 CFR 1.14. This collection is estimated to take 2 hours to complete, including gathering, preparing, and submitting the completed application form to the USPTO. Time will vary depending upon the individual case. Any comments on the amount of time you require to complete this form and/or suggestions for reducing this burden, should be sent to the Chief Information Officer, U.S. Patent and Trademark Office, P.O. Box 1450, Alexandria, VA 22313-1450. DO NOT SEND FEES OR COMPLETED FORMS TO THIS ADDRESS. **SEND TO: Commissioner for Patents, P.O. Box 1450, Alexandria, VA 22313-1450.**

If you need assistance in completing the form, call 1-800-PTO-9199 (1-800-786-9199) and select option 2.

ALL REFERENCES CONSIDERED EXCEPT WHERE LINED THROUGH. /A.B./

PART B - FEE(S) TRANSMITTAL

Complete and send this form, together with applicable fee(s), to: Mail **Mail Stop ISSUE FEE**
Commissioner for Patents
P.O. Box 1450
Alexandria, Virginia 22313-1450
or Fax (571)-273-2885

INSTRUCTIONS: This form should be used for transmitting the ISSUE FEE and PUBLICATION FEE (if required). Blocks 1 through 5 should be completed where appropriate. All further correspondence including the Patent, advance orders and notification of maintenance fees will be mailed to the current correspondence address as indicated unless corrected below or directed otherwise in Block 1, by (a) specifying a new correspondence address; and/or (b) indicating a separate "FEE ADDRESS" for maintenance fee notifications.

CURRENT CORRESPONDENCE ADDRESS (Note: Use Block 1 for any change of address)

93749 7590 01/11/2016
Alexander Soto
7673 Hazard Center Dr.
San Diego, CA 92108

Note: A certificate of mailing can only be used for domestic mailings of the Fee(s) Transmittal. This certificate cannot be used for any other accompanying papers. Each additional paper, such as an assignment or formal drawing, must have its own certificate of mailing or transmission.

Certificate of Mailing or Transmission
I hereby certify that this Fee(s) Transmittal is being deposited with the United States Postal Service with sufficient postage for first class mail in an envelope addressed to the Mail Stop ISSUE FEE address above, or being facsimile transmitted to the USPTO (571) 273-2885, on the date indicated below.

(Depositor's name)
(Signature)
(Date)

APPLICATION NO.	FILING DATE	FIRST NAMED INVENTOR	ATTORNEY DOCKET NO.	CONFIRMATION NO.
12/512,968	07/30/2009	Alexander I. Soto	UBI-002C	6685

TITLE OF INVENTION: SYSTEM AND METHOD FOR PERFORMING HIGH-SPEED COMMUNICATIONS OVER FIBER OPTICAL NETWORKS

APPLN. TYPE	ENTITY STATUS	ISSUE FEE DUE	PUBLICATION FEE DUE	PREV. PAID ISSUE FEE	TOTAL FEE(S) DUE	DATE DUE
nonprovisional	SMALL	$480	$0	$0	$480	04/11/2016

EXAMINER	ART UNIT	CLASS-SUBCLASS
BELLO, AGUSTIN	2637	398-135000

1. Change of correspondence address or indication of "Fee Address" (37 CFR 1.363).
- ☐ Change of correspondence address (or Change of Correspondence Address form PTO/SB/122) attached.
- ☐ "Fee Address" indication (or "Fee Address" Indication form PTO/SB/47; Rev 03-02 or more recent) attached. **Use of a Customer Number is required.**

2. For printing on the patent front page, list
(1) The names of up to 3 registered patent attorneys or agents OR, alternatively,
(2) The name of a single firm (having as a member a registered attorney or agent) and the names of up to 2 registered patent attorneys or agents. If no name is listed, no name will be printed.
1 _____
2 _____
3 _____

3. ASSIGNEE NAME AND RESIDENCE DATA TO BE PRINTED ON THE PATENT (print or type)

PLEASE NOTE: Unless an assignee is identified below, no assignee data will appear on the patent. If an assignee is identified below, the document has been filed for recordation as set forth in 37 CFR 3.11. Completion of this form is NOT a substitute for filing an assignment.

(A) NAME OF ASSIGNEE (B) RESIDENCE: (CITY and STATE OR COUNTRY)

Please check the appropriate assignee category or categories (will not be printed on the patent) : ☐ Individual ☐ Corporation or other private group entity ☐ Government

4a. The following fee(s) are submitted:
- ☒ Issue Fee
- ☐ Publication Fee (No small entity discount permitted)
- ☐ Advance Order - # of Copies _____

4b. Payment of Fee(s): **(Please first reapply any previously paid issue fee shown above)**
- ☐ A check is enclosed.
- ☒ Payment by credit card. Form PTO-2038 is attached.
- ☐ The director is hereby authorized to charge the required fee(s), any deficiency, or credits any overpayment, to Deposit Account Number _____ (enclose an extra copy of this form).

5. **Change in Entity Status** (from status indicated above)
- ☐ Applicant certifying micro entity status. See 37 CFR 1.29 — NOTE: Absent a valid certification of Micro Entity Status (see forms PTO/SB/15A and 15B), issue fee payment in the micro entity amount will not be accepted at the risk of application abandonment.
- ☐ Applicant asserting small entity status. See 37 CFR 1.27 — NOTE: If the application was previously under micro entity status, checking this box will be taken to be a notification of loss of entitlement to micro entity status.
- ☐ Applicant changing to regular undiscounted fee status. — NOTE: Checking this box will be taken to be a notification of loss of entitlement to small or micro entity status, as applicable.

NOTE: This form must be signed in accordance with 37 CFR 1.31 and 1.33. See 37 CFR 1.4 for signature requirements and certifications.

Authorized Signature /Alexander Soto/ Date April 10, 2016
Typed or printed name Alexander Soto Registration No. _____

PTOL-85 Part B (10-13) Approved for use through 10/31/2013. OMB 0651-0033 U.S. Patent and Trademark Office; U.S. DEPARTMENT OF COMMERCE

Electronic Patent Application Fee Transmittal

Application Number:	12512968
Filing Date:	30-Jul-2009
Title of Invention:	SYSTEM AND METHOD FOR PERFORMING HIGH-SPEED COMMUNICATIONS OVER FIBER OPTICAL NETWORKS
First Named Inventor/Applicant Name:	Alexander I. Soto
Filer:	Alexander Ivan Soto
Attorney Docket Number:	UBI-002C

Filed as Small Entity

Filing Fees for Utility under 35 USC 111(a)

Description	Fee Code	Quantity	Amount	Sub-Total in USD($)
Basic Filing:				
Pages:				
Claims:				
Miscellaneous-Filing:				
Petition:				
Patent-Appeals-and-Interference:				
Post-Allowance-and-Post-Issuance:				
Utility Appl Issue Fee	2501	1	480	480

Description	Fee Code	Quantity	Amount	Sub-Total in USD($)
Extension-of-Time:				
Miscellaneous:				
			Total in USD ($)	**480**

Electronic Acknowledgement Receipt	
EFS ID:	25446582
Application Number:	12512968
International Application Number:	
Confirmation Number:	6685
Title of Invention:	SYSTEM AND METHOD FOR PERFORMING HIGH-SPEED COMMUNICATIONS OVER FIBER OPTICAL NETWORKS
First Named Inventor/Applicant Name:	Alexander I. Soto
Customer Number:	93749
Filer:	Alexander Ivan Soto
Filer Authorized By:	
Attorney Docket Number:	UBI-002C
Receipt Date:	10-APR-2016
Filing Date:	30-JUL-2009
Time Stamp:	21:07:06
Application Type:	Utility under 35 USC 111(a)

Payment information:

Submitted with Payment	yes
Payment Type	Credit Card
Payment was successfully received in RAM	$480
RAM confirmation Number	7239
Deposit Account	
Authorized User	
The Director of the USPTO is hereby authorized to charge indicated fees and credit any overpayment as follows:	

File Listing:

Document Number	Document Description	File Name	File Size(Bytes)/ Message Digest	Multi Part /.zip	Pages (if appl.)
1	Issue Fee Payment (PTO-85B)	issue_transmittal_UBI-002C.pdf	91765 7722f02fc30c937e71b44304ca59e7204a00a24c	no	1
Warnings:					
Information:					
2	Fee Worksheet (SB06)	fee-info.pdf	30785 6eb321d1604094 1f7e2dffc178b5fbf195b849ed	no	2
Warnings:					
Information:					
		Total Files Size (in bytes):	122550		

This Acknowledgement Receipt evidences receipt on the noted date by the USPTO of the indicated documents, characterized by the applicant, and including page counts, where applicable. It serves as evidence of receipt similar to a Post Card, as described in MPEP 503.

New Applications Under 35 U.S.C. 111
If a new application is being filed and the application includes the necessary components for a filing date (see 37 CFR 1.53(b)-(d) and MPEP 506), a Filing Receipt (37 CFR 1.54) will be issued in due course and the date shown on this Acknowledgement Receipt will establish the filing date of the application.

National Stage of an International Application under 35 U.S.C. 371
If a timely submission to enter the national stage of an international application is compliant with the conditions of 35 U.S.C. 371 and other applicable requirements a Form PCT/DO/EO/903 indicating acceptance of the application as a national stage submission under 35 U.S.C. 371 will be issued in addition to the Filing Receipt, in due course.

New International Application Filed with the USPTO as a Receiving Office
If a new international application is being filed and the international application includes the necessary components for an international filing date (see PCT Article 11 and MPEP 1810), a Notification of the International Application Number and of the International Filing Date (Form PCT/RO/105) will be issued in due course, subject to prescriptions concerning national security, and the date shown on this Acknowledgement Receipt will establish the international filing date of the application.

UNITED STATES PATENT AND TRADEMARK OFFICE

UNITED STATES DEPARTMENT OF COMMERCE
United States Patent and Trademark Office
Address: COMMISSIONER FOR PATENTS
P.O. Box 1450
Alexandria, Virginia 22313-1450
www.uspto.gov

NOTICE OF ALLOWANCE AND FEE(S) DUE

93749 7590 01/11/2016
Alexander Soto
7673 Hazard Center Dr.
San Diego, CA 92108

EXAMINER
BELLO, AGUSTIN

ART UNIT	PAPER NUMBER
2637	

DATE MAILED: 01/11/2016

APPLICATION NO.	FILING DATE	FIRST NAMED INVENTOR	ATTORNEY DOCKET NO.	CONFIRMATION NO.
12/512,968	07/30/2009	Alexander I. Soto	UBI-002C	6685

TITLE OF INVENTION: SYSTEM AND METHOD FOR PERFORMING HIGH-SPEED COMMUNICATIONS OVER FIBER OPTICAL NETWORKS

APPLN. TYPE	ENTITY STATUS	ISSUE FEE DUE	PUBLICATION FEE DUE	PREV. PAID ISSUE FEE	TOTAL FEE(S) DUE	DATE DUE
nonprovisional	SMALL	$480	$0	$0	$480	04/11/2016

THE APPLICATION IDENTIFIED ABOVE HAS BEEN EXAMINED AND IS ALLOWED FOR ISSUANCE AS A PATENT. PROSECUTION ON THE MERITS IS CLOSED. THIS NOTICE OF ALLOWANCE IS NOT A GRANT OF PATENT RIGHTS. THIS APPLICATION IS SUBJECT TO WITHDRAWAL FROM ISSUE AT THE INITIATIVE OF THE OFFICE OR UPON PETITION BY THE APPLICANT. SEE 37 CFR 1.313 AND MPEP 1308.

THE ISSUE FEE AND PUBLICATION FEE (IF REQUIRED) MUST BE PAID WITHIN THREE MONTHS FROM THE MAILING DATE OF THIS NOTICE OR THIS APPLICATION SHALL BE REGARDED AS ABANDONED. THIS STATUTORY PERIOD CANNOT BE EXTENDED. SEE 35 U.S.C. 151. THE ISSUE FEE DUE INDICATED ABOVE DOES NOT REFLECT A CREDIT FOR ANY PREVIOUSLY PAID ISSUE FEE IN THIS APPLICATION. IF AN ISSUE FEE HAS PREVIOUSLY BEEN PAID IN THIS APPLICATION (AS SHOWN ABOVE), THE RETURN OF PART B OF THIS FORM WILL BE CONSIDERED A REQUEST TO REAPPLY THE PREVIOUSLY PAID ISSUE FEE TOWARD THE ISSUE FEE NOW DUE.

HOW TO REPLY TO THIS NOTICE:

I. Review the ENTITY STATUS shown above. If the ENTITY STATUS is shown as SMALL or MICRO, verify whether entitlement to that entity status still applies.

If the ENTITY STATUS is the same as shown above, pay the TOTAL FEE(S) DUE shown above.

If the ENTITY STATUS is changed from that shown above, on PART B - FEE(S) TRANSMITTAL, complete section number 5 titled "Change in Entity Status (from status indicated above)".

For purposes of this notice, small entity fees are 1/2 the amount of undiscounted fees, and micro entity fees are 1/2 the amount of small entity fees.

II. PART B - FEE(S) TRANSMITTAL, or its equivalent, must be completed and returned to the United States Patent and Trademark Office (USPTO) with your ISSUE FEE and PUBLICATION FEE (if required). If you are charging the fee(s) to your deposit account, section "4b" of Part B - Fee(s) Transmittal should be completed and an extra copy of the form should be submitted. If an equivalent of Part B is filed, a request to reapply a previously paid issue fee must be clearly made, and delays in processing may occur due to the difficulty in recognizing the paper as an equivalent of Part B.

III. All communications regarding this application must give the application number. Please direct all communications prior to issuance to Mail Stop ISSUE FEE unless advised to the contrary.

IMPORTANT REMINDER: Utility patents issuing on applications filed on or after Dec. 12, 1980 may require payment of maintenance fees. It is patentee's responsibility to ensure timely payment of maintenance fees when due.

PTOL-85 (Rev. 02/11)

PART B - FEE(S) TRANSMITTAL

Complete and send this form, together with applicable fee(s), to: Mail **Mail Stop ISSUE FEE**
Commissioner for Patents
P.O. Box 1450
Alexandria, Virginia 22313-1450
or Fax (571)-273-2885

INSTRUCTIONS: This form should be used for transmitting the ISSUE FEE and PUBLICATION FEE (if required). Blocks 1 through 5 should be completed where appropriate. All further correspondence including the Patent, advance orders and notification of maintenance fees will be mailed to the current correspondence address as indicated unless corrected below or directed otherwise in Block 1, by (a) specifying a new correspondence address; and/or (b) indicating a separate "FEE ADDRESS" for maintenance fee notifications.

CURRENT CORRESPONDENCE ADDRESS (Note: Use Block 1 for any change of address)

93749 7590 01/11/2016
Alexander Soto
7673 Hazard Center Dr.
San Diego, CA 92108

Note: A certificate of mailing can only be used for domestic mailings of the Fee(s) Transmittal. This certificate cannot be used for any other accompanying papers. Each additional paper, such as an assignment or formal drawing, must have its own certificate of mailing or transmission.

Certificate of Mailing or Transmission
I hereby certify that this Fee(s) Transmittal is being deposited with the United States Postal Service with sufficient postage for first class mail in an envelope addressed to the Mail Stop ISSUE FEE address above, or being facsimile transmitted to the USPTO (571) 273-2885, on the date indicated below.

(Depositor's name)
(Signature)
(Date)

APPLICATION NO.	FILING DATE	FIRST NAMED INVENTOR	ATTORNEY DOCKET NO.	CONFIRMATION NO.
12/512,968	07/30/2009	Alexander I. Soto	UBI-002C	6685

TITLE OF INVENTION: SYSTEM AND METHOD FOR PERFORMING HIGH-SPEED COMMUNICATIONS OVER FIBER OPTICAL NETWORKS

APPLN. TYPE	ENTITY STATUS	ISSUE FEE DUE	PUBLICATION FEE DUE	PREV. PAID ISSUE FEE	TOTAL FEE(S) DUE	DATE DUE
nonprovisional	SMALL	$480	$0	$0	$480	04/11/2016

EXAMINER	ART UNIT	CLASS-SUBCLASS
BELLO, AGUSTIN	2637	398-135000

1. Change of correspondence address or indication of "Fee Address" (37 CFR 1.363).
❑ Change of correspondence address (or Change of Correspondence Address form PTO/SB/122) attached.
❑ "Fee Address" indication (or "Fee Address" Indication form PTO/SB/47; Rev 03-02 or more recent) attached. **Use of a Customer Number is required.**

2. For printing on the patent front page, list
(1) The names of up to 3 registered patent attorneys or agents OR, alternatively,
(2) The name of a single firm (having as a member a registered attorney or agent) and the names of up to 2 registered patent attorneys or agents. If no name is listed, no name will be printed.
1_____
2_____
3_____

3. ASSIGNEE NAME AND RESIDENCE DATA TO BE PRINTED ON THE PATENT (print or type)

PLEASE NOTE: Unless an assignee is identified below, no assignee data will appear on the patent. If an assignee is identified below, the document has been filed for recordation as set forth in 37 CFR 3.11. Completion of this form is NOT a substitute for filing an assignment.

(A) NAME OF ASSIGNEE (B) RESIDENCE: (CITY and STATE OR COUNTRY)

Please check the appropriate assignee category or categories (will not be printed on the patent) : ❑ Individual ❑ Corporation or other private group entity ❑ Government

4a. The following fee(s) are submitted:
❑ Issue Fee
❑ Publication Fee (No small entity discount permitted)
❑ Advance Order - # of Copies _____

4b. Payment of Fee(s): **(Please first reapply any previously paid issue fee shown above)**
❑ A check is enclosed.
❑ Payment by credit card. Form PTO-2038 is attached.
❑ The director is hereby authorized to charge the required fee(s), any deficiency, or credits any overpayment, to Deposit Account Number _____ (enclose an extra copy of this form).

5. **Change in Entity Status** (from status indicated above)
❑ Applicant certifying micro entity status. See 37 CFR 1.29 — NOTE: Absent a valid certification of Micro Entity Status (see forms PTO/SB/15A and 15B), issue fee payment in the micro entity amount will not be accepted at the risk of application abandonment.
❑ Applicant asserting small entity status. See 37 CFR 1.27 — NOTE: If the application was previously under micro entity status, checking this box will be taken to be a notification of loss of entitlement to micro entity status.
❑ Applicant changing to regular undiscounted fee status. — NOTE: Checking this box will be taken to be a notification of loss of entitlement to small or micro entity status, as applicable.

NOTE: This form must be signed in accordance with 37 CFR 1.31 and 1.33. See 37 CFR 1.4 for signature requirements and certifications.

Authorized Signature _____ Date _____

Typed or printed name _____ Registration No. _____

PTOL-85 Part B (10-13) Approved for use through 10/31/2013. OMB 0651-0033 U.S. Patent and Trademark Office; U.S. DEPARTMENT OF COMMERCE

UNITED STATES PATENT AND TRADEMARK OFFICE

UNITED STATES DEPARTMENT OF COMMERCE
United States Patent and Trademark Office
Address: COMMISSIONER FOR PATENTS
P.O. Box 1450
Alexandria, Virginia 22313-1450
www.uspto.gov

APPLICATION NO.	FILING DATE	FIRST NAMED INVENTOR	ATTORNEY DOCKET NO.	CONFIRMATION NO.
12/512,968	07/30/2009	Alexander I. Soto	UBI-002C	6685

93749 7590 01/11/2016
Alexander Soto
7673 Hazard Center Dr.
San Diego, CA 92108

EXAMINER
BELLO, AGUSTIN

ART UNIT	PAPER NUMBER
2637	

DATE MAILED: 01/11/2016

Determination of Patent Term Adjustment under 35 U.S.C. 154 (b)
(Applications filed on or after May 29, 2000)

The Office has discontinued providing a Patent Term Adjustment (PTA) calculation with the Notice of Allowance.

Section 1(h)(2) of the AIA Technical Corrections Act amended 35 U.S.C. 154(b)(3)(B)(i) to eliminate the requirement that the Office provide a patent term adjustment determination with the notice of allowance. See Revisions to Patent Term Adjustment, 78 Fed. Reg. 19416, 19417 (Apr. 1, 2013). Therefore, the Office is no longer providing an initial patent term adjustment determination with the notice of allowance. The Office will continue to provide a patent term adjustment determination with the Issue Notification Letter that is mailed to applicant approximately three weeks prior to the issue date of the patent, and will include the patent term adjustment on the patent. Any request for reconsideration of the patent term adjustment determination (or reinstatement of patent term adjustment) should follow the process outlined in 37 CFR 1.705.

Any questions regarding the Patent Term Extension or Adjustment determination should be directed to the Office of Patent Legal Administration at (571)-272-7702. Questions relating to issue and publication fee payments should be directed to the Customer Service Center of the Office of Patent Publication at 1-(888)-786-0101 or (571)-272-4200.

PTOL-85 (Rev. 02/11)

OMB Clearance and PRA Burden Statement for PTOL-85 Part B

The Paperwork Reduction Act (PRA) of 1995 requires Federal agencies to obtain Office of Management and Budget approval before requesting most types of information from the public. When OMB approves an agency request to collect information from the public, OMB (i) provides a valid OMB Control Number and expiration date for the agency to display on the instrument that will be used to collect the information and (ii) requires the agency to inform the public about the OMB Control Number's legal significance in accordance with 5 CFR 1320.5(b).

The information collected by PTOL-85 Part B is required by 37 CFR 1.311. The information is required to obtain or retain a benefit by the public which is to file (and by the USPTO to process) an application. Confidentiality is governed by 35 U.S.C. 122 and 37 CFR 1.14. This collection is estimated to take 12 minutes to complete, including gathering, preparing, and submitting the completed application form to the USPTO. Time will vary depending upon the individual case. Any comments on the amount of time you require to complete this form and/or suggestions for reducing this burden, should be sent to the Chief Information Officer, U.S. Patent and Trademark Office, U.S. Department of Commerce, P.O. Box 1450, Alexandria, Virginia 22313-1450. DO NOT SEND FEES OR COMPLETED FORMS TO THIS ADDRESS. SEND TO: Commissioner for Patents, P.O. Box 1450, Alexandria, Virginia 22313-1450. Under the Paperwork Reduction Act of 1995, no persons are required to respond to a collection of information unless it displays a valid OMB control number.

Privacy Act Statement

The Privacy Act of 1974 (P.L. 93-579) requires that you be given certain information in connection with your submission of the attached form related to a patent application or patent. Accordingly, pursuant to the requirements of the Act, please be advised that: (1) the general authority for the collection of this information is 35 U.S.C. 2(b)(2); (2) furnishing of the information solicited is voluntary; and (3) the principal purpose for which the information is used by the U.S. Patent and Trademark Office is to process and/or examine your submission related to a patent application or patent. If you do not furnish the requested information, the U.S. Patent and Trademark Office may not be able to process and/or examine your submission, which may result in termination of proceedings or abandonment of the application or expiration of the patent.

The information provided by you in this form will be subject to the following routine uses:

1. The information on this form will be treated confidentially to the extent allowed under the Freedom of Information Act (5 U.S.C. 552) and the Privacy Act (5 U.S.C 552a). Records from this system of records may be disclosed to the Department of Justice to determine whether disclosure of these records is required by the Freedom of Information Act.
2. A record from this system of records may be disclosed, as a routine use, in the course of presenting evidence to a court, magistrate, or administrative tribunal, including disclosures to opposing counsel in the course of settlement negotiations.
3. A record in this system of records may be disclosed, as a routine use, to a Member of Congress submitting a request involving an individual, to whom the record pertains, when the individual has requested assistance from the Member with respect to the subject matter of the record.
4. A record in this system of records may be disclosed, as a routine use, to a contractor of the Agency having need for the information in order to perform a contract. Recipients of information shall be required to comply with the requirements of the Privacy Act of 1974, as amended, pursuant to 5 U.S.C. 552a(m).
5. A record related to an International Application filed under the Patent Cooperation Treaty in this system of records may be disclosed, as a routine use, to the International Bureau of the World Intellectual Property Organization, pursuant to the Patent Cooperation Treaty.
6. A record in this system of records may be disclosed, as a routine use, to another federal agency for purposes of National Security review (35 U.S.C. 181) and for review pursuant to the Atomic Energy Act (42 U.S.C. 218(c)).
7. A record from this system of records may be disclosed, as a routine use, to the Administrator, General Services, or his/her designee, during an inspection of records conducted by GSA as part of that agency's responsibility to recommend improvements in records management practices and programs, under authority of 44 U.S.C. 2904 and 2906. Such disclosure shall be made in accordance with the GSA regulations governing inspection of records for this purpose, and any other relevant (i.e., GSA or Commerce) directive. Such disclosure shall not be used to make determinations about individuals.
8. A record from this system of records may be disclosed, as a routine use, to the public after either publication of the application pursuant to 35 U.S.C. 122(b) or issuance of a patent pursuant to 35 U.S.C. 151. Further, a record may be disclosed, subject to the limitations of 37 CFR 1.14, as a routine use, to the public if the record was filed in an application which became abandoned or in which the proceedings were terminated and which application is referenced by either a published application, an application open to public inspection or an issued patent.
9. A record from this system of records may be disclosed, as a routine use, to a Federal, State, or local law enforcement agency, if the USPTO becomes aware of a violation or potential violation of law or regulation.

Notice of Allowability	Application No. 12/512,968	Applicant(s) SOTO ET AL.	
	Examiner AGUSTIN BELLO	Art Unit 2637	AIA (First Inventor to File) Status No

-- The MAILING DATE of this communication appears on the cover sheet with the correspondence address--

All claims being allowable, PROSECUTION ON THE MERITS IS (OR REMAINS) CLOSED in this application. If not included herewith (or previously mailed), a Notice of Allowance (PTOL-85) or other appropriate communication will be mailed in due course. **THIS NOTICE OF ALLOWABILITY IS NOT A GRANT OF PATENT RIGHTS.** This application is subject to withdrawal from issue at the initiative of the Office or upon petition by the applicant. See 37 CFR 1.313 and MPEP 1308.

1. ☒ This communication is responsive to *the decision rendered by the BPAI on 10/29/15*.
   ☐ A declaration(s)/affidavit(s) under **37 CFR 1.130(b)** was/were filed on_____.
2. ☐ An election was made by the applicant in response to a restriction requirement set forth during the interview on _____; the restriction requirement and election have been incorporated into this action.
3. ☒ The allowed claim(s) is/are *1-17*. As a result of the allowed claim(s), you may be eligible to benefit from the **Patent Prosecution Highway** program at a participating intellectual property office for the corresponding application. For more information, please see http://www.uspto.gov/patents/init_events/pph/index.jsp or send an inquiry to PPHfeedback@uspto.gov .
4. ☐ Acknowledgment is made of a claim for foreign priority under 35 U.S.C. § 119(a)-(d) or (f).

   Certified copies:

   a) ☐ All b) ☐ Some *c) ☐ None of the:
   1. ☐ Certified copies of the priority documents have been received.
   2. ☐ Certified copies of the priority documents have been received in Application No. _____ .
   3. ☐ Copies of the certified copies of the priority documents have been received in this national stage application from the International Bureau (PCT Rule 17.2(a)).

   * Certified copies not received: _____.

Applicant has THREE MONTHS FROM THE "MAILING DATE" of this communication to file a reply complying with the requirements noted below. Failure to timely comply will result in ABANDONMENT of this application.
THIS THREE-MONTH PERIOD IS NOT EXTENDABLE.

5. ☐ CORRECTED DRAWINGS (as "replacement sheets") must be submitted.
   ☐ including changes required by the attached Examiner's Amendment / Comment or in the Office action of Paper No./Mail Date _____.

   Identifying indicia such as the application number (see 37 CFR 1.84(c)) should be written on the drawings in the front (not the back) of each sheet. Replacement sheet(s) should be labeled as such in the header according to 37 CFR 1.121(d).
6. ☐ DEPOSIT OF and/or INFORMATION about the deposit of BIOLOGICAL MATERIAL must be submitted. Note the attached Examiner's comment regarding REQUIREMENT FOR THE DEPOSIT OF BIOLOGICAL MATERIAL.

Attachment(s)

1. ☐ Notice of References Cited (PTO-892)
2. ☐ Information Disclosure Statements (PTO/SB/08), Paper No./Mail Date _____
3. ☐ Examiner's Comment Regarding Requirement for Deposit of Biological Material
4. ☐ Interview Summary (PTO-413), Paper No./Mail Date _____ .
5. ☐ Examiner's Amendment/Comment
6. ☐ Examiner's Statement of Reasons for Allowance
7. ☐ Other _____.

/AGUSTIN BELLO/
Primary Examiner, Art Unit 2637

Search Notes	Application/Control No.	Applicant(s)/Patent Under Reexamination
	12512968	SOTO ET AL.
	Examiner	**Art Unit**
	AGUSTIN BELLO	2613

CPC- SEARCHED		
Symbol	**Date**	**Examiner**

CPC COMBINATION SETS - SEARCHED		
Symbol	**Date**	**Examiner**

US CLASSIFICATION SEARCHED			
Class	**Subclass**	**Date**	**Examiner**
398	66-73, 135-139	12/30/2015	ab

SEARCH NOTES		
Search Notes	**Date**	**Examiner**

INTERFERENCE SEARCH			
US Class/ CPC Symbol	**US Subclass / CPC Group**	**Date**	**Examiner**
398	66-73, 135-139	12/30/2015	ab

Index of Claims	Application/Control No.	Applicant(s)/Patent Under Reexamination
	12512968	SOTO ET AL.
	Examiner	**Art Unit**
	AGUSTIN BELLO	2637

✓	Rejected	-	Cancelled	N	Non-Elected	A	Appeal
=	Allowed	÷	Restricted	I	Interference	O	Objected

☐ Claims renumbered in the same order as presented by applicant ☐ CPA ☐ T.D. ☐ R.1.47

CLAIM		DATE								
Final	Original	02/12/2012	07/11/2012	12/30/2015						
	1	✓	✓	=						
	2	✓	✓	=						
	3	✓	✓	=						
	4	✓	✓	=						
	5	✓	✓	=						
	6	✓	✓	=						
	7	✓	✓	=						
	8	✓	✓	=						
	9	✓	✓	=						
	10	✓	✓	=						
	11	✓	✓	=						
	12	✓	✓	=						
	13	✓	✓	=						
	14	✓	✓	=						
	15	✓	✓	=						
	16	✓	✓	=						
	17	✓	✓	=						
	18	✓	✓	-						
	19	✓	✓	-						
	20	✓	✓	-						
	21	✓	✓	-						

Issue Classification	Application/Control No.	Applicant(s)/Patent Under Reexamination
	12512968	SOTO ET AL.
	Examiner	**Art Unit**
	AGUSTIN BELLO	2637

CPC						
Symbol					**Type**	**Version**
H04J		14	/	02	F	2013-01-01
H04B		10	/	40	I	2013-01-01
H04J		14	/	0221	A	2013-01-01
H04J		14	/	0227	A	2013-01-01
H04J		14	/	0282	A	2013-01-01
H04J		14	/	0298	I	2013-01-01
H04J		14	/	0256	I	2013-01-01
H04J		14	/	0267	A	2013-01-01
			/			
			/			
			/			
			/			
			/			
			/			
			/			

CPC Combination Sets								
Symbol					**Type**	**Set**	**Ranking**	**Version**
			/					
			/					

NONE (Assistant Examiner)	(Date)	**Total Claims Allowed:** 17	
/AGUSTIN BELLO/ Primary Examiner.Art Unit 2637 (Primary Examiner)	12/30/2015 (Date)	O.G. Print Claim(s) 1	O.G. Print Figure 4

U.S. Patent and Trademark Office

Part of Paper No. 20151230

Issue Classification	Application/Control No.	Applicant(s)/Patent Under Reexamination
	12512968	SOTO ET AL.
	Examiner	**Art Unit**
	AGUSTIN BELLO	2637

US ORIGINAL CLASSIFICATION		INTERNATIONAL CLASSIFICATION	
CLASS	SUBCLASS	CLAIMED	NON-CLAIMED
398	138	H 0 4 B 10 / 00 (2013.01.01)	

CROSS REFERENCE(S)					
CLASS	SUBCLASS (ONE SUBCLASS PER BLOCK)				
398	139	135			

NONE (Assistant Examiner)	(Date)	**Total Claims Allowed:** 17	
/AGUSTIN BELLO/ Primary Examiner.Art Unit 2637 (Primary Examiner)	12/30/2015 (Date)	O.G. Print Claim(s) 1	O.G. Print Figure 4

U.S. Patent and Trademark Office

Part of Paper No. 20151230

Issue Classification	Application/Control No.	Applicant(s)/Patent Under Reexamination
	12512968	SOTO ET AL.
	Examiner	**Art Unit**
	AGUSTIN BELLO	2637

☒ **Claims renumbered in the same order as presented by applicant** ☐ **CPA** ☐ **T.D.** ☐ **R.1.47**

Final	Original	Final	Original	Final	Original	Final	Original	Final	Original	Final	Original	Final	Original	Final	Original

NONE (Assistant Examiner)	(Date)	**Total Claims Allowed:** 17	
/AGUSTIN BELLO/ Primary Examiner.Art Unit 2637 (Primary Examiner)	12/30/2015 (Date)	O.G. Print Claim(s) 1	O.G. Print Figure 4

U.S. Patent and Trademark Office

Part of Paper No. 20151230

UNITED STATES PATENT AND TRADEMARK OFFICE

UNITED STATES DEPARTMENT OF COMMERCE
United States Patent and Trademark Office
Address: COMMISSIONER FOR PATENTS
P.O. Box 1450
Alexandria, Virginia 22313-1450
www.uspto.gov

APPLICATION NO.	FILING DATE	FIRST NAMED INVENTOR	ATTORNEY DOCKET NO.	CONFIRMATION NO.
12/512,968	07/30/2009	Alexander I. Soto	UBI-002C	6685

93749 7590 10/29/2015
Alexander Soto
7673 Hazard Center Dr.
San Diego, CA 92108

EXAMINER
BELLO, AGUSTIN

ART UNIT	PAPER NUMBER
2637	

NOTIFICATION DATE	DELIVERY MODE
10/29/2015	ELECTRONIC

Please find below and/or attached an Office communication concerning this application or proceeding.

The time period for reply, if any, is set in the attached communication.

Notice of the Office communication was sent electronically on above-indicated "Notification Date" to the following e-mail address(es):

alexander.i.soto@gmail.com

PTOL-90A (Rev. 04/07)

UNITED STATES PATENT AND TRADEMARK OFFICE

BEFORE THE PATENT TRIAL AND APPEAL BOARD

Ex parte ALEXANDER I. SOTO and WALTER G. SOTO

Appeal 2013-010502
Application 12/512,968
Technology Center 2600

Before CARLA M. KRIVAK, BRUCE R. WINSOR, and
MICHAEL M. BARRY, *Administrative Patent Judges*.

WINSOR, *Administrative Patent Judge*.

DECISION ON APPEAL

Appellants appeal under 35 U.S.C. § 134(a) from the final rejection of claims 1–21, which constitute all the claims pending in this application. We have jurisdiction under 35 U.S.C. § 6(b).

We affirm-in-part.

STATEMENT OF THE CASE

Appellants' disclosed invention "relates to optical fiber communications generally, and more specifically to m-ary modulation in optical communication networks." (Spec. ¶ 2.) Claim 1, which is illustrative, reads as follows:

1.) An optical transceiver module for an Optical Line Terminal (OLT); the optical transceiver module capable of transmitting continuous mode optical data signals on a first wavelength according to an m-ary modulation format and to equalize an optical data channel responsive to a received burst mode optical data signal on a second wavelength over a fiber optic cable, the optical transceiver module comprising:

a system interface for electrically coupling the optical transceiver module to the OLT and for communicating electrical binary data signals between the optical transceiver module and the OLT;

a modulator electrically coupled to the system interface and configured to receive a first electrical binary data signal and to generate according to an m-ary modulation method a first electrical m-ary modulation signal representative of the data in the first electrical binary data signal;

a driver electrically coupled to the modulator configured to amplify the first electrical_m-ary modulation signal in order to drive an optical transmitter of the optical transceiver module;

an optical transmitter electrically coupled to the driver configured to emit the optical continuous mode signal on the first wavelength on the fiber optic cable responsive to and representative of the amplified first electrical_m-ary modulation signal;

an optical detector configured to receive the burst mode optical data signal on the second wavelength from the fiber optic cable and generate a second electrical signal representative of the burst mode optical data signal;

an amplifier electrically coupled to the optical detector and configured to amplify the second electrical signal to facilitate clock and data recovery of the second electrical signal;

> a clock data recovery and equalization unit electrically coupled to the amplifier and configured to equalize a burst mode channel, recover clock data timing and to generate a second electrical_m-ary modulation signal; and
>
> a de-modulator electrically coupled to the system interface and electrically coupled to the clock data recovery and equalization unit and configured to generate a second electrical_binary data signal representative of the data in the second electrical m-ary modulation signal; whereby
>
> the optical transceiver module converts electrical binary data communications from the OL T to optical m-ary data communications for communications over the fiber optical cable.

Claims 1, 3–10, 12–18, 20, and 21 stand rejected under 35 U.S.C. § 102(e) as being anticipated by Brede et al. (US 6,603,822 B2; Aug. 5, 2003; hereinafter "Brede"). (*See* Final Act. 2–7.)

Claims 2, 11, and 19 stand rejected under 35 U.S.C. § 103(a) as being unpatentable over Brede and Aronson et al. (US 2007/0031153 A1; Feb. 8, 2007; hereinafter "Aronson"). (*See* Final Act. 7–8.)

Rather than repeat the arguments here, we refer to the Appeal Brief ("Br." filed Dec. 16, 2012) for the positions of Appellants and the Final Office Action ("Final Act." mailed July 17, 2012) and Answer ("Ans." mailed May 23, 2013) for the reasoning, findings, and conclusions of the Examiner. Only those arguments actually made by Appellants have been considered in this decision. Arguments that Appellants did not make in the Briefs have not been considered and are deemed to be waived. *See* 37 C.F.R. § 41.37(c)(1)(iv) (2012).

ISSUES

The salient issues presented by Appellants' contentions are as follows:

Does the Examiner err in finding Brede discloses "an optical transmitter . . . configured to emit [an] optical continuous mode signal on [a] first wavelength on [a] fiber optic cable . . . [, and] an optical detector configured to receive [a] burst mode optical data signal on [a] second wavelength from the fiber optic cable," as recited in claim 1?

Does the Examiner err in finding Brede discloses "an optical transmitter . . . configured to emit [a] burst mode optical signal on [a] first wavelength on the fiber optic cable . . . [, and] an optical detector configured to receive [a] continuous mode optical data signal on [a] second wavelength from the fiber optic cable," as recited in claim 10?

Does the Examiner err in finding Brede discloses "an Optical Line Terminal (OLT), or an Optical Network Unit (ONU) or an Optical Network Terminal (ONT)," as recited in claim 18?

Does the Examiner err in finding Aronson combined with Brede teaches or suggests "the form factor of the optical transceiver module is selected from the group consisting essentially of: SFP; SFP+; XFP; X2; XENPAK; XP A; and 300 pin transceiver form factors," as recited in claim 19?

ANALYSIS

Claim 1

The Examiner finds Brede discloses an optical transmitter and receiver respectively configured to transmit a continuous mode optical signal on a first wavelength and to receive a burst mode optical signal on a second

wavelength. (*See* Final Act. 3 (citing Brede Figs. 3 (items 14, 16), 4 (items 501, 502).) The Examiner explains as follows:

> The limitations drawn to the claimed optical transmitter and optical receiver fail to recite a single structural element that distinguishes them from Brede's transmitter and receiver. Instead, Appellant's claim language only requires that the transmitter and receiver be configured to transmit or receive continuous/burst mode signals. As such, examiner contends that there being no structural difference between the transmitter/receiver of the claimed invention and that of the prior art, that they too <u>*could*</u> *be configured* to transmit or receive continuous/burst mode signals. Moreover, Brede's transmitter and receiver <u>*can*</u> undoubtedly *be configured* to transmit or receive continuous/burst mode signals given Brede's disclosure of support for both signal types (i.e. "burst identification" column 63 lines 55–64; "continuously broadcasts" of column 65 lines 45–48).

(Ans. 17–18 (emphases added) (citing *In re Schreiber,* 128 F.3d 1473, 1477–78 (Fed. Cir. 1997)).)

Appellants contend, *inter alia,* the Examiner has failed to demonstrate that the elements disclosed by Brede are arranged as recited in claim 1. (Br. 13.) We agree with Appellants.

The disputed limitations of claim 1 recite "an optical transmitter . . . *configured to* emit [an] optical continuous mode signal on [a] first wavelength on [a] fiber optic cable . . . [, and] an optical detector *configured to* receive [a] burst mode optical data signal on [a] second wavelength from the fiber optic cable" (emphases added). We construe "configured to" more narrowly than simply capable of being configured. *See Typhoon Touch Technologies, Inc. v. Dell, Inc.*, 659 F.3d 1376, 1380 (Fed. Cir. 2011) (construing "memory . . . configured to" as "memory that must perform the recited function"). We conclude the broadest reasonable interpretation of

"configured to" in claim 1 requires the "optical transmitter" be specifically adapted to "emit [an] optical continuous mode signal on [a] first wavelength" and the "optical detector" to "receive [a] burst mode optical data signal on [a] second wavelength." This claim construction is consistent with the ordinary meaning of the phrases and with Appellants' Specification. The Examiner has, at most, established that Brede's transmitters 501 (Brede, Fig. 4) and receivers 502 (*id.*) *could be* specifically adapted to perform the recited functions; the Examiner makes no finding, and points to no evidence, that Brede's transmitters and receivers *are* adapted to perform the recited functions. Unlike the situation in *Schreiber*, here the Examiner has made no finding that the recited functions are inherently performed by Brede's structure. *See Schreiber*, 128 F.3d at 1478.

Therefore, we find the Examiner's findings and reasoning do not demonstrate that in Brede "each and every element as set forth in the claim is found, either expressly or inherently described," *Verdegaal Bros., Inc. v. Union Oil Co. of Cal.*, 814 F.2d 628, 631 (Fed. Cir. 1987), "arranged as in the claim under review," *In re Bond*, 910 F.2d 831, 832 (Fed. Cir. 1990). In other words, on this record, Brede does not establish a prima facie case of anticipation of claim 1. Accordingly, we decline to sustain the rejection of claim 1 and claims 2–9, which depend from claim 1.

Claim 10

Claim 10 recites an optical transmitter and receiver respectively configured to transmit a burst mode optical signal on a first wavelength and to receive a continuous mode optical signal on a second wavelength, i.e., the converse of the recitations of claim 1. The Examiner's findings and explanations, and Appellants' contentions, regarding claim 1 also apply to

claim 10. (*See* Final Act. 2–4; Br. 13; Ans. 17–18.) For substantially the same reasons as set forth *supra* regarding claim 1, we decline to sustain the rejection of claim 10 and claims 11–17, which depend from claim 10.

Claim 18

Unlike claims 1 and 10, claim 18 does not recite limitations regarding burst mode and continuous mode optical signals. Appellants make numerous arguments that the various components disclosed by Brede and the way they are electrically connected are not the same as recited in claim 18. (*See* Br. 12–14.) We find these arguments unpersuasive because claim 18 is a method claim that recites various steps to be performed but does not recite all of the components to perform those steps or the way in which those components are interconnected.

In the interest of fairness, however, we have considered Appellants' arguments as if they were framed to address the actual recitations of claim 18. Even so, they do not persuade us of error. In that regard, except as specifically addressed *supra* regarding claims 1 and 10, we adopt the Examiner's findings (Final Act. 2–4) and explanations (Ans. 10–19) as our own. We note, in particular, that we agree with the Examiner's explanation that the recitation of "electrically connected" in the claims does not preclude an electrical connection through intervening elements. (*See, e.g.*, Ans. 16.) Similarly, the broad recitations of "responsive to," "representative of," and the like in claim 18 do not preclude intervening steps or require a precise correspondence.

Appellants contend "the Examiner's rejections fail to address an Optical Network Unit (ONU) or Optical Network Terminal (ONT)." (Br. 14.) We are not persuaded of error. Claim 18 recites "an Optical Line

Terminal (OLT), *or* an Optical Network Unit (ONU) *or* an Optical Network Terminal (ONT)" (emphases added). In other words, the claim recites the OLT, ONU, and ONT in the alternative. *See Kustom Signals, Inc. v. Applied Concepts, Inc.*, 264 F.3d 1326, 1331 (Fed. Cir. 2001); *Brown v. 3M*, 265 F.3d 1349, 1352 (Fed. Cir. 2001); *Schumer v. Laboratory Computer Systems, Inc.*, 308 F.3d 1304, 1311–12 (Fed. Cir. 2002). In order to establish a prima facie case of anticipation, the Examiner need only establish that the art discloses one of the alternatives recited. *See Brown*, 265 F.3d at 1351 (citing *Titanium Metals Corp. of America v. Banner,* 778 F.2d 775, 782 (Fed. Cir. 1985)). The Examiner finds that Brede discloses an OLT (*see* Final Act. 2, 8), so we need not consider whether Brede also discloses an ONU or ONT.

Appellants also contend

> [t]he Examiner's rejections fail to meet [the] requirements [for an anticipation rejection] because . . . they rely on an unsupported and flawed conflation of Appellants' optical transceiver module for an Optical Line Terminal (OLT) as in claim [18] with the OLT itself which Brede calls a Host Digital Terminal (HDT).

(Br. 10–11 (citing Final Act 8).) We are not persuaded of error.

Appellants concede that Brede teaches an optical transceiver module and an OLT, and that the transceiver module is a part of the OLT. (Br. 11 ("Brede's HDT with associated transmitters and receivers can be conflated with Appellants' OLT.").) Appellants' contention is, as pointed out by the Examiner (Ans. 10), a matter of semantics. Appellants basically contend the Examiner's mapping of the claims, e.g., claim 18, to Brede's HDT inappropriately draws the line between the transceiver module and the remainder of the HDT (the recited OLT), incorporating functions of the

recited OLT not recited in the claim to be performed by the transceiver module. However, Appellants' Specification equates the transceiver to the OLT. (Spec. ¶ 9 ("The first transceiver *is* an optical line terminator." (emphasis added)).) Furthermore, because of the transition phrase "comprising the steps of," claim 18 is in open-ended form. "'Comprising' is a term of art used in claim language which means that the named elements are essential, but other elements may be added and still form a construct within the scope of the claim." *Genentech, Inc. v. Chiron Corp.*, 112 F.3d 495, 501 (Fed. Cir. 1997) (citation omitted). Thus, that the functions performed by Brede's HDT include functions Appellants ascribe to the OLT not recited to be performed by Appellants' transceiver module does not negate anticipation. Furthermore, we see nothing in claim 18 or Appellants' Specification that precludes Appellants' transceiver from being mapped to Brede's HDT and Appellants' OLT from being mapped to Brede's HDT located within Brede's head end 32 (Brede, Fig. 2). (*See* Ans. 10–13.)

Accordingly, we sustain the rejection of claim 18 along with claims 20 and 21, which depend from claim 18 and were not separately argued with particularity.

Claim 19

Claim 19 recites that the form factor of the optical transceiver module recited in claim 18 be selected from a group of form factors that includes, *inter alia*, XFP. The Examiner concludes it would have been obvious at the time of the invention to apply an XFP form factor, as taught by Aronson, to the transceiver module (HDT) taught by Brede. (Final Act. 7–8 (citing Aronson ¶¶ 5, 11, 45).)

Appellants contend the skilled person would not have expected application of an XFP form factor to Brede's HDT to be successful because

> Brede describes the HDT 12 of FIG. 3 (dotted box of FIG. 3), as being up to 100 feet away from the optical and electrical conversion elements 14 and 16 (Brede col. 25, lines 7–9) with connections between them establish[ed] via coaxial cables 22, 28 which is desirable as this allows flexibility of deployment of the HDT within the central office building.

(Br. 15.) Appellants point out, without citation to any evidence in the record, that the dimensions for an XFP transceiver module is 8.5 mm (0.33 inches) high, 18.35 mm (0.72 inches) wide and, 78 mm (3.10 inches) deep, rendering it physically impossible to achieve the 100 feet of separation in an XFP form factor. (Br. 16.) We are not persuaded of error because the cited passage of Brede only states that the distance between the transmitter and receiver and the HDT may be *up to* 100 feet, and does not preclude the HDT being co-located with the transmitter and receiver, i.e., the distance being essentially zero.

Appellants further contend because Brede teaches a four fiber interface, whereas Aronson teaches an XFP form factor used with a two fiber interface, incorporating Brede's transceiver into Aronson's XFP form factor "would eliminate Brede's desirable feature of redundancy of transmissions as well a requirement for synchronization of the communication channel and to avoid interference." (Br. 16 (citing Brede, col. 56, ll. 38–56).) Appellants contend this would render Brede unsuitable for its intended purpose and amounts to an exercise of impermissible hindsight. (*Id.* (citing *In re Gordon,* 733 F.2d 900 (Fed. Cir. 1984); *In re Gorman,* 933 F.2d 982, 986 (Fed. Cir. 1991)).) We are not persuaded of error, because Appellants' argument presumes the skilled artisan would

merely insert Brede's device into Aronson's device without exercising any skill, judgement, or creativity. The test of obviousness is not whether one reference can be bodily inserted into another, but, "[r]ather, the test is what the combined teachings of the references would have suggested to [one] of ordinary skill in the art," *In re Keller*, 642 F.2d 413, 425 (CCPA 1981), who is a person of ordinary creativity and not an automaton, *KSR Int'l Co. v. Teleflex Inc.*, 550 U.S. 398, 421 (2007), and whose inferences and creative steps we may consider, *id.* at 418. The artisan is not compelled to blindly follow the teaching of one prior art reference over the other without the exercise of independent judgment (*see Lear Siegler, Inc. v. Aeroquip Corp.*, 733 F.2d 881, 889 (Fed. Cir. 1984)).

The Examiner has articulated a reason to combine the teachings of Brede and Aronson based on evidence drawn from the references themselves. We conclude the Examiner has not exercised impermissible hindsight, but rather has based the rejection on "some articulated reasoning with some rational underpinning to support the legal conclusion of obviousness." *KSR*, 550 U.S. at 418 (quoting *In re Kahn*, 441 F.3d 977, 988 (Fed. Cir. 2006)).

Accordingly, we sustain the rejection of claim 19.

DECISION

The decision of the Examiner to reject claims 1–17 is reversed.

The decision of the Examiner to reject claims 18–21 is affirmed.

No time period for taking any subsequent action in connection with this appeal may be extended under 37 C.F.R. § 1.136(a)(1). *See* 37 C.F.R. § 1.136(a)(1)(iv) (2013).

AFFIRMED-IN-PART

msc

UNITED STATES PATENT AND TRADEMARK OFFICE

UNITED STATES DEPARTMENT OF COMMERCE
United States Patent and Trademark Office
Address: COMMISSIONER FOR PATENTS
P.O. Box 1450
Alexandria, Virginia 22313-1450
www.uspto.gov

APPLICATION NO.	FILING DATE	FIRST NAMED INVENTOR	ATTORNEY DOCKET NO.	CONFIRMATION NO.
12/512,968	07/30/2009	Alexander I. Soto	UBI-002C	6685

93749 7590 09/11/2013
Alexander Soto
7673 Hazard Center Dr.
San Diego, CA 92108

EXAMINER
BELLO, AGUSTIN

ART UNIT	PAPER NUMBER
2637	

NOTIFICATION DATE	DELIVERY MODE
09/11/2013	ELECTRONIC

Please find below and/or attached an Office communication concerning this application or proceeding.

The time period for reply, if any, is set in the attached communication.

Notice of the Office communication was sent electronically on above-indicated "Notification Date" to the following e-mail address(es):

alex@iponsystems.com

PTOL-90A (Rev. 04/07)

United States Patent and Trademark Office

Under Secretary of Commerce for Intellectual Property and
Director of the United States Patent and Trademark Office
P.O. Box 1450
Alexandria, Virginia 22313-1450
www.uspto.gov

ALEXANDER SOTO
7673 HAZARD CENTER DR.
SAN DIEGO, CA 92108

Appeal No: 2013-010502
Application: 12/512,968
Appellant: Alexander I. Soto et al.

Patent Trial and Appeal Board Docketing Notice

Application 12/512,968 was received from the Technology Center at the Board on August 22, 2013 and has been assigned Appeal No: 2013-010502.

In all future communications regarding this appeal, please include both the application number and the appeal number.

The mailing address for the Board is:

PATENT TRIAL and APPEAL BOARD
UNITED STATES PATENT AND TRADEMARK OFFICE
P.O. BOX 1450
ALEXANDRIA, VIRGINIA 22313-1450

Telephone inquiries can be made by calling 571-272-9797 and referencing the appeal number listed above.

By order of the Patent Trial and Appeal Board.

TBJ

UNITED STATES PATENT AND TRADEMARK OFFICE

UNITED STATES DEPARTMENT OF COMMERCE
United States Patent and Trademark Office
Address: COMMISSIONER FOR PATENTS
P.O. Box 1450
Alexandria, Virginia 22313-1450
www.uspto.gov

APPLICATION NO.	FILING DATE	FIRST NAMED INVENTOR	ATTORNEY DOCKET NO.	CONFIRMATION NO.
12/512,968	07/30/2009	Alexander I. Soto	UBI-002C	6685

93749 7590 06/11/2013
Alexander Soto
7673 Hazard Center Dr.
San Diego, CA 92108

EXAMINER
BELLO, AGUSTIN

ART UNIT	PAPER NUMBER
2637	

NOTIFICATION DATE	DELIVERY MODE
06/11/2013	ELECTRONIC

Please find below and/or attached an Office communication concerning this application or proceeding.

The time period for reply, if any, is set in the attached communication.

Notice of the Office communication was sent electronically on above-indicated "Notification Date" to the following e-mail address(es):

alex@iponsystems.com

PTOL-90A (Rev. 04/07)

UNITED STATES DEPARTMENT OF COMMERCE
U.S. Patent and Trademark Office
Address : COMMISSIONER FOR PATENTS
P.O. Box 1450
Alexandria, Virginia 22313-1450

APPLICATION NO./ CONTROL NO.	FILING DATE	FIRST NAMED INVENTOR / PATENT IN REEXAMINATION	ATTORNEY DOCKET NO.
12/512,968	30 July, 2009	SOTO ET AL.	UBI-002C

		EXAMINER	
Alexander Soto 7673 Hazard Center Dr. San Diego, CA 92108		STANLEY HAMILTON	
		ART UNIT	PAPER
		OPIM	20130604

DATE MAILED:

Please find below and/or attached an Office communication concerning this application or proceeding.

Commissioner for Patents

Please see the enclosed notice relating to the examiner's answer recently mailed in this application.

PTO-90C (Rev.04-03)

Appeal Forwarding Fee Requirement

USPTO records show that an examiner's answer was recently mailed.

If the examiner's answer is in response to an appeal brief filed on or after March 19, 2013 and the appeal brief fee required by former 37 CFR 41.20(b)(2) was not filed before March 19, 2013, the appeal forwarding fee set forth in 37 CFR 41.20(b)(4) is required to avoid dismissal of the appeal. The appeal forwarding fee is required within the later of two months from the date of either the examiner's answer, or a decision refusing to grant a petition under 37 CFR 1.181 to designate a new ground of rejection in an examiner's answer. See 37 CFR 41.45.

If the examiner's answer is in response to an appeal brief filed before March 19, 2013 or the appeal brief fee required by former 37 CFR 41.20(b)(2) was filed before March 19, 2013, an appeal forwarding fee is not required.

UNITED STATES PATENT AND TRADEMARK OFFICE

UNITED STATES DEPARTMENT OF COMMERCE
United States Patent and Trademark Office
Address: COMMISSIONER FOR PATENTS
P.O. Box 1450
Alexandria, Virginia 22313-1450
www.uspto.gov

APPLICATION NO.	FILING DATE	FIRST NAMED INVENTOR	ATTORNEY DOCKET NO.	CONFIRMATION NO.
12/512,968	07/30/2009	Alexander I. Soto	UBI-002C	6685

93749 7590 05/23/2013
Alexander Soto
7673 Hazard Center Dr.
San Diego, CA 92108

EXAMINER
BELLO, AGUSTIN

ART UNIT	PAPER NUMBER
2637	

NOTIFICATION DATE	DELIVERY MODE
05/23/2013	ELECTRONIC

Please find below and/or attached an Office communication concerning this application or proceeding.

The time period for reply, if any, is set in the attached communication.

Notice of the Office communication was sent electronically on above-indicated "Notification Date" to the following e-mail address(es):

alex@iponsystems.com

PTOL-90A (Rev. 04/07)

UNITED STATES PATENT AND TRADEMARK OFFICE

Commissioner for Patents
United States Patent and Trademark Office
P.O. Box 1450
Alexandria, VA 22313-1450
www.uspto.gov

BEFORE THE BOARD OF PATENT APPEALS AND INTERFERENCES

Application Number: 12/512,968
Filing Date: July 30, 2009
Appellant(s): SOTO ET AL.

Alexander Soto
For Appellant

EXAMINER'S ANSWER

This is in response to the appeal brief filed 12/16/12 appealing from the Office action mailed 07/17/12.

(1) Real Party in Interest

The examiner has no comment on the statement, or lack of statement, identifying by name the real party in interest in the brief.

(2) Related Appeals and Interferences

The examiner is not aware of any related appeals, interferences, or judicial proceedings which will directly affect or be directly affected by or have a bearing on the Board's decision in the pending appeal.

(3) Status of Claims

The following is a list of claims that are rejected and pending in the application: 1-21.

(4) Status of Amendments After Final

The examiner has no comment on the appellant's statement of the status of amendments after final rejection contained in the brief.

(**5) Summary of Claimed Subject Matter**

The examiner has no comment on the summary of claimed subject matter contained in the brief.

(6) Grounds of Rejection to be Reviewed on Appeal

The examiner has no comment on the appellant's statement of the grounds of rejection to be reviewed on appeal. Every ground of rejection set forth in the Office

action from which the appeal is taken (as modified by any advisory actions) is being maintained by the examiner except for the grounds of rejection (if any) listed under the subheading "WITHDRAWN REJECTIONS." New grounds of rejection (if any) are provided under the subheading "NEW GROUNDS OF REJECTION."

(7) Claims Appendix

The examiner has no comment on the copy of the appealed claims contained in the Appendix to the appellant's brief.

(**8) Evidence Relied Upon**

US 6603822 B2	Brede; Jeffrey et al.	08-2003
US 20070031153 A1	Aronson; Lewis B. et al.	02-2007

(9) Grounds of Rejection

The following ground(s) of rejection are applicable to the appealed claims:

DETAILED ACTION

Claim Rejections - 35 USC § 102

1. The following is a quotation of the appropriate paragraphs of 35 U.S.C. 102 that form the basis for the rejections under this section made in this Office action:

> A person shall be entitled to a patent unless –
>
> (e) the invention was described in (1) an application for patent, published under section 122(b), by another filed in the United States before the invention by the applicant for patent or (2) a patent granted on an application for patent by another filed in the United States before the invention by the applicant for patent, except that an international application filed under the treaty defined in section 351(a) shall have the effects for purposes of this subsection of an application filed in the United States only if the international application designated the United States and was published under Article 21(2) of such treaty in the English language.

2. Claims 1, 3-10, 12-18, and 20-21 are rejected under 35 U.S.C. 102(e) as being anticipated by Brede (Patent No. US 6,603,822 B2).

Regarding claim 1, 10, 18, Brede teaches an optical transceiver module (Figure 3) for an Optical Line Terminal (i.e. "central office" and/or "head end" throughout) of the optical transceiver module capable of transmitting continuous mode optical data signals on a first wavelength according to an m-ary modulation format and to equalize an optical data channel responsive to a received burst mode optical data signal on a second wavelength over a fiber optic cable, the optical transceiver module comprising: a system interface (i.e. "Network Interface" of Figure 3) for electrically coupling the optical transceiver module to the OLT (i.e. "central office" and/or "head end" throughout) and for communicating electrical binary data signals between the optical transceiver module and the OLT; a modulator (reference numeral 82 in Figure 3) electrically coupled to the system interface and configured to receive a first electrical binary data signal and to generate according to an m-ary modulation method a first electrical m-ary modulation signal representative of the data in the first electrical binary data signal; a driver (reference numeral 25 in Figure 4; reference numeral 82 in Figure 3; reference numeral 148 in Figure 21; reference numeral 246 in Figure 37) electrically coupled to the modulator configured to amplify the first electrical m-ary modulation signal in order to drive an optical transmitter of the optical transceiver module; an optical transmitter (reference numeral 14 in Figure 3; reference numeral 501 in Figure 4) electrically coupled to the driver configured to emit the optical continuous mode

signal on the first wavelength on the fiber optic cable responsive to and representative of the amplified first electrical m-ary modulation signal; an optical detector (reference numeral 16 in Figure 3; reference numeral 502 in Figure 4) configured to receive the burst mode optical data signal on the second wavelength from the fiber optic cable and generate a second electrical signal representative of the burst mode optical data signal; an amplifier (reference numeral 82 in Figure 3; reference numeral 154 in Figure 22; reference numeral 234 in Figure 37) electrically coupled to the optical detector and configured to amplify the second electrical signal to facilitate clock and data recovery of the second electrical signal; a clock data recovery and equalization unit (reference numeral 54 in Figure 2; reference numeral 168, 172 in Figure 22; reference numeral 214, 222 in Figure 26; Figure 35) electrically coupled to the amplifier and configured to equalize a burst mode channel, recover clock data timing and to generate a second electrical m-ary modulation signal; and a de-modulator (reference numeral 174, 176 in Figure 22; reference numeral 216 in Figure 26; reference numeral 366 in Figure 35) electrically coupled to the system interface and electrically coupled to the clock data recovery and equalization unit and configured to generate a second binary data signal representative of the data in the second electrical m-ary modulation signal, whereby the optical transceiver module converts electrical binary data communications from the OLT to optical m-ary data communications for communications over the fiber optical cable.

Regarding claim 3, 12, 20, Brede teaches the optical transceiver module of claim 1, wherein the m-ary modulation method is selected from the group essentially consisting of: quadrature amplitude modulation (QAM); QAM-32 (column 6 lines 5-18); QAM-256; quadrature phase shift keying (QPSK); differential QPSK; return-to-zero QPSK; dual-polarized QPSK; orthogonal frequency division multiplexing (OFDM) (column 3 lines 11-21; column 11 lines 1-8; column 19 lines 34-67); pulse amplitude modulation (PAM); PAM-5; and PAM- 17.

Regarding claim 4, 13, Brede teaches the optical transceiver module of claim 1, wherein equalizing routine to equalize the burst mode channel employed by the clock data recovery and equalization unit is selected from the group consisting of: a blind equalization routine which does not use a known training sequence and decision-directed equalization routine using a known training sequence (column 8 lines 59 – column 9 line 9; column 54 lines 57-67; column 104 lines 21-45).

Regarding claim 5, 14, Brede teaches the optical transceiver module of claim 4, wherein the known training sequence of a decision-directed equalization routine is multiplexed in a frame of the received burst mode optical signal (column 8 lines 59 – column 9 line 9; column 54 lines 57-67; column 104 lines 21-45).

Regarding claim 6, 21, Brede teaches the optical transceiver module of claim 1, further comprising: means for storing a first set of determined settings which improve processing of received burst mode data from a first client on the passive optical network associated with a first optical channel; means for loading a predetermined

second set of settings which improve prove processing of received burst mode data from a second client on the passive optical network associated with a second optical channel prior to processing received burst mode data from the second client (column 67 lines 5-11).

Regarding claim 7, 15, Brede teaches the optical transceiver module of claim 1, further comprising: an encoder (reference numeral 147 in Figure 21; reference numeral 248, 250 in Figure 37) electrically coupled to the system interface and coupled electrically to the input of the modulator and configured to encode the first electrical binary data signal as input to the modulator with a method designed to improve the energy per bit required to deliver the data transmitted by the optical transceiver module; and a decoder (Figure 26; Figure 34; reference numeral 228, 230, 240, 242 in Figure 37) electrically coupled to the system interface and coupled electrically to the output of the demodulator and configured to decode the second electrical binary data signal and correct for errors.

Regarding claim 8, 16, Brede teaches the optical transceiver module of claim 7, wherein the encoder or decoder method is selected from the group essentially consisting of: Reed-Solomon coding; trellis coding; Low-density parity-check coding, and Turbo coding (column 5 lines 42-52; column 31 lines 33-55; column 33 lines 1-4).

Regarding claim 9, 17, Brede teaches the optical transceiver module of claim 1, wherein the optical transceiver module and OLT are part of passive optical network (Figure 1 and Figure 2) and the passive optical network is a coarse wavelength-division

multiplexing (CWDM) or dense wavelength-division multiplexing (DWDM) passive optical network and an M number of wavelengths are transmitted and an N number of wavelengths are received over the fiber optic cable, the optical transceiver module further comprising: an M number of modulators (reference numeral 82 in Figure 3) coupled respectively to an M number of drivers (reference numeral 25 in Figure 4) coupled respectively to an M number of optical transmitters (reference numeral 501 in Figure 4) such that a respective M number of optical m-ary modulated signals are transmitted over the fiber optic cable (reference numeral 24 in Figure 4); and an N number of optical detectors (reference numeral 502 in Figure 4) coupled respectively to an N number of amplifiers (reference numeral 82 in Figure 3; reference numeral 154 in Figure 22; reference numeral 234 in Figure 37) coupled respectively to an N number of clock and data recovery units (reference numeral 54 in Figure 2; reference numeral 168, 172 in Figure 22; reference numeral 214, 222 in Figure 26; Figure 35) coupled respectively to an N number of equalizers coupled (reference numeral 54 in Figure 2; reference numeral 168, 172 in Figure 22; reference numeral 214, 222 in Figure 26; Figure 35) to an N number of demodulators (reference numeral 82 in Figure 3) such that a respective N number of binary modulated electrical signals are generated responsive to an N number of received optical data signals received over the fiber optic cable.

Claim Rejections - 35 USC § 103

3. The following is a quotation of 35 U.S.C. 103(a) which forms the basis for all obviousness rejections set forth in this Office action:

> (a) A patent may not be obtained though the invention is not identically disclosed or described as set forth in section 102 of this title, if the differences between the subject matter sought to be patented and the prior art are such that the subject matter as a whole would have been obvious at the time the invention was made to a person having ordinary skill in the art to which said subject matter pertains. Patentability shall not be negatived by the manner in which the invention was made.

4. Claims 2, 11, and 19 are rejected under 35 U.S.C. 103(a) as being unpatentable over Brede in view of Aronson (Patent Application Publication No. US 2007/0031153 A1).

Regarding claim 2, 11, 19, Brede teaches the optical transceiver module of claim 1, but fails to specifically teach that the form factor of the optical transceiver module is selected from the group consisting essentially of: SFP; SFP+; XFP; X2; XENPAK; XPA; and 300 pin transceiver form factors. However, as evidenced by Aronson, these types of form factors are well known in the art (paragraph [0005], [0011], [0045]). One skilled in the art would have been motivated to utilize any of the claimed form factors in order to meet design requirements, budgetary requirements, or performance requirements such as achieving 10 Gb/s (paragraph [0005], [0011], [0045]). Therefore, it would have been obvious to one skilled in the art at the time the invention was made to utilize a XFP form factor in Brede as taught by Aronson.

(10) Response to Argument

Initially, the main point of contention between Appellant and examiner appears to be one of semantics. Appellant makes numerous arguments positing that examiner

has conflated terminology used in Appellant's claim language with entirely different and unrelated apparatuses disclosed by the prior art. However, putting semantics aside and looking not at what an apparatus is called but rather what an apparatus does makes it clear that the apparatuses disclosed by Brede unmistakably meet the limitations of the claimed invention when given their broadest reasonable interpretation.

For example, if one where to substitute the generic term "little box" for each mention of Appellant's term "optical transceiver module," and the generic term "big box" for each mention of Appellant's terms "Optical Line Terminal" and "OLT," Appellant's claim 1 would read as follows:

> 1.) A **"little box"** for a **"big box"**; the **"little box"** capable of transmitting continuous mode optical data signals on a first wavelength according to an m-ary modulation format and to equalize an optical data channel responsive to a received burst mode optical data signal on a second wavelength over a fiber optic cable, the **"little box"** comprising: a system interface for electrically coupling the **"little box"** to the **"big box"** and for communicating electrical binary data signals between the **"little box"** and the **"big box"**; a modulator electrically coupled to the system interface and configured to receive a first electrical binary data signal and to generate according to an m-ary modulation method a first electrical m-ary modulation signal representative of the data in the first electrical binary data signal; a driver electrically coupled to the modulator configured to amplify the first electrical m-ary modulation signal in order to drive an optical transmitter of the **"little box"**; an optical transmitter electrically coupled to the driver configured to emit the optical continuous mode signal on the first wavelength on the fiber optic cable responsive to and representative of the amplified first electrical m-ary modulation signal; an optical detector configured to receive the burst mode optical data signal on the second wavelength from the fiber optic cable and generate a

> second electrical signal representative of the burst mode optical data signal; an amplifier electrically coupled to the optical detector and configured to amplify the second electrical signal to facilitate clock and data recovery of the second electrical signal; a clock data recovery and equalization unit electrically coupled to the amplifier and configured to equalize a burst mode channel, recover clock data timing and to generate a second electrical m-ary modulation signal; and a de-modulator electrically coupled to the system interface and electrically coupled to the clock data recovery and equalization unit and configured to generate a second electrical binary data signal representative of the data in the second electrical m-ary modulation signal; whereby the **"little box"** converts electrical binary data communications from the **"big box"** to optical m-ary data communications for communications over the fiber optical cable.

Specifically, we know from Appellant's post-preamble claim language that the **"little box"** comprises a system interface for electrically coupling the **"little box"** to the **"big box"** and for communicating electrical binary data signals between the **"little box"** and the **"big box,"** where an electrical driver drives the optical transmitter of the **"little box"** whereby the **"little box"** converts electrical binary data communications from the **"big box"** to optical m-ary data communications for communications over the fiber optical cable.

Looking now to the prior art and how it meets these generically labeled elements, Brede undeniably teaches a **"little box"** (reference numeral 12 in Figure 2), the internal details of which are shown in Figure 3 and Figure 4 in their entirety, within a **"big box"** (reference numeral 32 in Figure 2) where the **"little box"** comprises a system interface (i.e. "NETWORK INTERFACE" in Figure

3) for electrically coupling the **"little box"** to the **"big box"** and for communicating electrical binary data signals between the **"little box"** and the **"big box,"** where an electrical driver (reference numeral 25 in Figure 4; reference numeral 82 in Figure 3; reference numeral 148 in Figure 21; reference numeral 246 in Figure 37) drives the optical transmitter of the **"little box"** whereby the **"little box"** converts electrical binary data communications from the **"big box"** to optical m-ary data communications for communications over the fiber optical cable (reference numeral 24 in Figure 3 and Figure 4).

Given the above, there is no doubt that the limitations of the claimed invention are met by separate and distinct apparatuses in Brede, and specifically that the **"little box"** in Brede meets the limitations for the claimed "optical transceiver module" that is the thrust of the independent claims. Despite this, Appellant argues that the claimed invention is patentably distinct from the cited prior art because examiner has conflated the claimed "optical transceiver module," i.e. **"little box"** in the example above, with what should be, in Appellant's opinion, considered an "OLT" purportedly disclosed in Brede and referred to as **"big box"** above. However, examiner does nothing of the sort and instead maintains the clear distinction established by Brede between **"big box"** elements (reference numeral 32 in Figure 2) that Brede refers to as a "central office" or "head end" and the **"little box"** elements (reference numeral 12 in Figure 2) contained therein that Brede refers to as a "HDT" and/or "VDT."

Examiner notes that the "little box" "big box" analogy presented above is entirely supported by Appellant's own figures wherein the transceiver 100 in Appellant's Figure 1, i.e. "little box," resides within OLT 150 in Figure 2, i.e. "big box," as described in Appellant's specification paragraph [0043].

Even if the Board is not convinced by the line of reasoning presented above, examiner contends that regardless of what they're called the elements in Brede enumerated by examiner undeniably meet the limitations of the claimed invention when Appellant's terms "optical transceiver module" "Optical Line Terminal" and "OLT" are given their broadest reasonable interpretation.

Specifically, Appellant's term "OLT" or "optical line terminal" can be broadly but reasonably interpreted as a terminal for optical transmission lines. Looking at Brede's Figure 2 and related description, there is no doubt that element 32 is at one terminal end of all the optical transmission lines between itself and element 18. What is further clear from Brede's Figure 2 is that the element 32 contains not one, but at least two distinct optical transceiver modules 12 and 34 that utilize the terminated optical transmission line for optical communication upstream and downstream to/from elements 18. Given this and a complete lack of any claimed structurally distinguishing feature, it seems entirely reasonably to conclude that Brede's element 32 can be broadly considered an optical line terminal that serves the purpose of terminating the optical transmission lines of the system.

Similarly, Appellant's term "optical transceiver module" can be broadly but reasonably interpreted as a module that transmits and receives optical signals for the OLT/optical line terminal. As noted above, Brede discloses at least two optical transceiver modules 12 and 34, each which transmit and receive distinct optical signals to and from the optical transmission lines terminated at element 32. Looking further at the structure of Brede's element 12 as shown in Figure 3, it becomes crystal clear that this element, with its optical transmitter 14 and optical receiver 16, and its partner element 34, with its own transmitter and receiver, are solely responsible for the optical transmission and reception of optical signals on behalf of element 32 in Figure 2 within which they reside and within which the optical line is terminated. Of course, being the thrust of the claimed invention, Appellant recites a number of structural elements for the optical transceiver module that examiner maintains are also met by the optical transceiver modules of Brede and as discussed at length below. The point here is that Brede clearly meets the limitation of the terms "optical line terminal" and "optical transceiver module" at least on face value and examiner has not confused or conflated the terms as alleged by Appellant.

The balance of Appellant's arguments are focused on various focused on various limitations for the optical transceiver module that Appellant feels are not met by Brede, but in reality are indeed met by Brede when given the broadest reasonable interpretation.

Specifically, Appellant argues that Brede's MCC modem 82 does not electrically couple to Brede's "Network Interface" but to CXMU logic 80 and therefore Brede does not disclose a modulator as arranged in the Appellants' claims. However, examiner notes that the claim language fails to preclude any intervening elements between the modulator and the interface and merely requires that they be electrically coupled. As such, examiner contends that the interface and modulator taught by Brede are electrically coupled to one another via CXMU logic and this does not detract from the fact that are electrically coupled. More concretely, the interface must undeniably be electrically coupled to the modem in order to transmit any information. Furthermore, Appellant has apparently forgotten that the term "modem" is a combination of the terms "**mod**ulate" and "**dem**odulate," so there is no doubt that Brede's modem is a modulator as claimed.

Next, Appellant argues that Brede fails to specifically teach the claimed driver element. However, examiner maintains that Brede teaches exactly this via any and all of the cited elements (reference 25 in FIG. 4, reference 82 in Fig. 3, reference 148 in FIG. 21, reference 246 in FIG. 37). Clearly, any and all of these elements serves to provide an electrical signal that drives the optical transmitter with information and are they all electrically coupled to the modulator 82 and optical transmitter 14 in Figure 3 whether or not there are intervening electrically coupled elements. Furthermore, Brede specifically discloses that modem coaxial

card (MCC) 82 in Figure 3 includes and transmitter amplifier shown as 148 in Figure 21 whereby, "a plurality of orthogonal carriers is then **amplified by transmitter amplifier 148** and filtered by transmitter filter 150 before being coupled onto the optical fiber by way of telephony transmitter 14." Examiner finds it entirely too convenient that Appellant has not attempted to explain away this particular element being that it completely destroys Appellant's argument but instead focuses on undermining other individual elements.

Appellant next argues Brede fails to specifically teach the optical transmitter/optical receiver of claim 1 and claim 10. However, examiner notes that while features of an apparatus may be recited either structurally or functionally, claims directed to an apparatus must be distinguished from the prior art in terms of structure rather than function. *In re Schreiber*, 128 F.3d 1473, 1477-78, 44 USPQ2d 1429, 1431-32 (Fed. Cir. 1997). The limitations drawn to the claimed optical transmitter and optical receiver fail to recite a single structural element that distinguishes them from Brede's transmitter and receiver. Instead, Appellant's claim language only requires that the transmitter and receiver be configured to transmit or receive continuous/burst mode signals. As such, examiner contends that there being no structural difference between the transmitter/receiver of the claimed invention and that of the prior art, that they too could be configured to transmit or receive continuous/burst mode signals. Moreover, Brede's transmitter and receiver can undoubtedly be configured to

transmit or receive continuous/burst mode signals given Brede's disclosure of support for both signal types (i.e. "burst identification" column 63 lines 55-64; "continuously broadcasts" of column 65 lines 45-48).

Next, Appellant argues that Brede fails to specifically teach an amplifier electrically coupled to the optical detector. However, Brede teaches exactly this via an amplifier clearly shown between elements 154 in Figure 22 and/or reference numeral 234 in Figure 37. Furthermore, Appellant again fails to recite any structurally distinguishing feature between the claimed amplifier and that of the cited prior art. As such, examiner maintains that the Brede's amplifiers can also be configured to and actually do amplify a second electrical signal then used for clock and data recovery (reference numeral 168 in Figure 2) further downstream of the amplifier.

Regarding Appellant's argument that Brede fails to teach the claimed clock data recovery and equalization unit electrically coupled to the amplifier, examiner notes that Brede teaches exactly this at least in Figure 22 where an amplifier between elements 154 is shown electrically coupled to a clock data recovery 168 and equalization unit 172 the details of which are shown in Figure 35. Furthermore, a clock data recovery unit is clearly shown electrically coupled to an amplifier 234 in Figure 37. As noted above, it is of no importance that other intervening elements may exist between and also electrically coupled to the

amplifier and clock data recovery and equalization unit because the claim language does not preclude such elements.

Next, Appellant again argues that Brede's MCC modem 82 is not electrically couple to Brede's "Network Interface" but to CXMU logic 80 and therefore Brede does not disclose a demodulator as arranged in the Appellants' claims. However, examiner notes that the claim language fails to preclude any intervening elements between the demodulator and the interface and merely requires that they be electrically coupled. As such, examiner contends that the interface and demodulator taught by Brede are electrically coupled to one another via CXMU logic and this does not detract from the fact that are electrically coupled. More concretely, the interface must undeniably be electrically coupled to the demodulator in order to receive any information.

Regarding Appellant's assertion that examiner has failed to properly reject the purportedly claimed transceiver for the ONU/ONT of claim 10, examiner notes that the thrust of claim 10 and/or claim 18 is directed to an optical transceiver module and not necessarily where this transceiver module can be used. The preamble of claim 18 provides ample evidence of this since the optical transceiver is clearly useable in either the OLT or the ONT/ONU. Furthermore, as discussed at length above, Brede clearly teaches all of the elements of the optical transceiver module. As such, if Appellant's optical transceiver module can

be used in either an OLT, ONT, or ONU then examiner asserts that the transceiver module of Brede can be similarly used.

Next, Appellant's argument that it is impossible for Brede to disclose an ONU or ONT fails to take into consideration that Brede's ONT/ONUs reside within or are considered elements 18 in Figure 2 and not within elements of HFC distribution network 11. Furthermore, the thrust of the claims are directed to the optical transceiver module and not necessarily where the modules can be used. As noted above, Brede clearly meets the limitations of the optical transceiver module regardless of where it is used.

In response to Appellant's arguments against the references individually, one cannot show nonobviousness by attacking references individually where the rejections are based on combinations of references. See *In re Keller*, 642 F.2d 413, 208 USPQ 871 (CCPA 1981); *In re Merck & Co.,* 800 F.2d 1091, 231 USPQ 375 (Fed. Cir. 1986).

In response to Appellant's argument that the form factors taught by Aronson cannot be used in Brede, the test for obviousness is not whether the features of a secondary reference may be bodily incorporated into the structure of the primary reference; nor is it that the claimed invention must be expressly suggested in any one or all of the references. Rather, the test is what the combined teachings of the references would have suggested to those of ordinary skill in the art. See *In re Keller*, 642 F.2d 413, 208 USPQ 871 (CCPA 1981).

In response to Appellant's argument that the examiner's conclusion of obviousness is based upon improper hindsight reasoning, it must be recognized that any judgment on obviousness is in a sense necessarily a reconstruction based upon hindsight reasoning. But so long as it takes into account only knowledge which was within the level of ordinary skill at the time the claimed invention was made, and does not include knowledge gleaned only from the applicant's disclosure, such a reconstruction is proper. See *In re McLaughlin*, 443 F.2d 1392, 170 USPQ 209 (CCPA 1971).

In response to Appellant's argument that there is no teaching, suggestion, or motivation to combine the references, the examiner recognizes that obviousness may be established by combining or modifying the teachings of the prior art to produce the claimed invention where there is some teaching, suggestion, or motivation to do so found either in the references themselves or in the knowledge generally available to one of ordinary skill in the art. See *In re Fine*, 837 F.2d 1071, 5 USPQ2d 1596 (Fed. Cir. 1988), *In re Jones*, 958 F.2d 347, 21 USPQ2d 1941 (Fed. Cir. 1992), and *KSR International Co. v. Teleflex, Inc.*, 550 U.S. 398, 82 USPQ2d 1385 (2007). In this case, examiner has clearly noted the desire to meet design requirements, budgetary requirements, or performance requirements as motivation for one skilled in the art to utilize the form factors taught by Aronson in Brede.

(11) Related Proceeding(s) Appendix

No decision rendered by a court or the Board is identified by the examiner in the Related Appeals and Interferences section of this examiner's answer.

For the above reasons, it is believed that the rejections should be sustained.

Respectfully submitted,

/Agustin Bello/

Primary Examiner, Art Unit 2637

Conferees:

/KENNETH N VANDERPUYE/

Supervisory Patent Examiner, Art Unit 2636

/Li Liu/

Primary Examiner, Art Unit 2636

	PATENTS **Docket No. UBI-02C**
IN THE UNITED STATES PATENT AND TRADEMARK OFFICE	
In re Application of: **Alexander I. Soto et al.**	Group Art Unit: **2613**
Patent Application No.: **12/512,968**	
Filed on: **July 30, 2009**	
For: **SYSTEM AND METHOD FOR PERFORMING HIGH-SPEED COMMUNICATIONS OVER FIBER OPTICAL NETWORKS**	Examiner: Bello, Agustin

Commissioner for Patents
Mail Stop Amendment
PO Box 1450
Alexandria, VA 22313-4150

This Amended Brief on Appeal is in response to the Notification of Non-Complaint Appeal Brief dated January 8, 2013. The Office states that the Appeal Brief filed on December 16, 2012 is defective because it did not include a concise explanation of the subject matter defined in each of the independent claims involved in this appeal. The notice also states only a corrected Section V Summary of Claimed Subject Matter need be submitted.

Attached is a corrected Section V Summary of the Claimed Subject Matter. It is respectfully submitted that the corrected Section V overcomes the basis for the non-compliant Appeal Brief rejection.

Fee for a 1 month extension of time per 37 CFR 1.136 is included with this filing.

Respectfully submitted,

/Alexander Soto/

Customer No. 93749
7673 Hazard Center Dr.
San Diego, CA 92108
858-527-2397
Alexander.I.Soto@gmail.com

V. SUMMARY OF THE CLAIMED SUBJECT MATTER

The concise explanation of the subject matter defined in each of the independent claims involved in this appeal (claims 1, 10 and 18) are provided as only an example and not an admission that the claims are limited to any particular embodiment and are as follows:

Claim 1 concerns an alternative embodiment of transceiver **100**, such as optical module **326**, utilizing a single fiber link **314a** as illustrated in **FIG. 6B** (page 6 lines 59 to 61, paragraph **[0050]**). TC-Layer/MAC **305** block can include Optical Line Terminal (OLT) protocol stacks such as specified in ITU G.984 and IEEE 802.3ah (page 5 lines 29-35, paragraph **[0044]**). OLT TC-Layer/MAC block **305** sends data to modulator (MOD) **309a** block of optical transceiver module **326** (page 5 lines 38-68, paragraphs **[0044-0045]**). MOD **309a** block performs m-ary modulation on the data which is then conditioned and provided to Driver **312a** (page 5 lines 80 to 98, paragraph **[0046]**). Driver **312a** drives an optical transmitter **313a** which transmits light in response to signals received from Driver **312a** (page 5 lines 99 to 106, paragraph **[0046]**). Received light transmissions are received by an optical detector such as photo diode PD **315a** which provides an electrical signal (photocurrent) to transimpedance amplifier (TIA) **316a** that converts the photocurrent into an electrical voltage signal (page 5 lines 107 to 115, paragraph **[0047]**). The electrical voltage signal is provided to a linear amplifier (LA) **317a** that amplifies the signal to provide increase resolution to the signal which is then provided to Clock Data Recovery (CDR) and Equalization block (EQ) **320a** (page 5 lines 115 to 122, paragraph **[0047]**). CDR and EQ block **320a** performs equalization on the received data and recovers clock and data signals which is then provided to demodulator **323a** which performs m-ary demodulation on the received data that is then provided to OLT TC-Layer **305** (page 5 line 122 to page 6 line 15, paragraph **[0047]**). Optical transceiver module **326** can confirm to industry form factor standards such as SFP SFP+ and XFP and such standards include electrical interfaces used to interface to such systems as an OLT (page 6 lines 19 to 35, paragraph **[0048]**). Communications from optical transceiver module **326** can be continuous or burst mode (page 4 lines 7 to 12, paragraph **[0038]**) as well use two different wavelengths with one wavelength used in

each direction (page 4 lines 20 to 25, paragraph **[0039]**).

Claim 10 concerns an alternative embodiment of transceiver **100**, such as optical module **326**, utilizing a single fiber link **314a** as illustrated in **FIG. 6B** (page 6 lines 59 to 61, paragraph **[0050]**). TC-Layer/MAC **305** block can include Optical Network Unit (ONU) or Optical Network Terminal (ONT) protocol stacks such as specified in ITU G.984 and IEEE 802.3ah (page 5 lines 29-35, paragraph **[0044]**). ONU/ONT TC-Layer/MAC block **305** sends data to modulator (MOD) **309a** block of optical transceiver module **326** (page 5 lines 38-68, paragraphs **[0044-0045]**). MOD **309a** block performs m-ary modulation on the data which is then conditioned and provided to Driver **312a** (page 5 lines 80 to 98, paragraph **[0046]**). Driver **312a** drives an optical transmitter **313a** which transmits light in response to signals received from Driver **312a** (page 5 lines 99 to 106, paragraph **[0046]**). Received light transmissions are received by an optical detector such as photo diode PD **315a** which provides an electrical signal (photocurrent) to transimpedance amplifier (TIA) **316a** that converts the photocurrent into an electrical voltage signal (page 5 lines 107 to 115, paragraph **[0047]**). The electrical voltage signal is provided to a linear amplifier (LA) **317a** that amplifies the signal to provide increase resolution to the signal which is then provided to Clock Data Recovery (CDR) and Equalization block (EQ) **320a** (page 5 lines 115 to 122, paragraph **[0047]**). CDR and EQ block **320a** performs equalization on the received data and recovers clock and data signals which is then provided to demodulator **323a** which performs m-ary demodulation on the received data that is then provided to OLT TC-Layer **305** (page 5 line 122 to page 6 line 15, paragraph **[0047]**). Optical transceiver module **326** can confirm to industry form factor standards such as SFP SFP+ and XFP and such standards include electrical interfaces used to interface to such systems as an ONU/ONT (page 6 lines 19 to 35, paragraph **[0048]**). Communications from optical transceiver module **326** can be continuous or burst mode (page 4 lines 7 to 12, paragraph **[0038]**) as well use two different wavelengths with one wavelength used in each direction (page 4 lines 20 to 25, paragraph **[0039]**).

Claim 18 concerns an alternative embodiment of transceiver **100**, such as optical module **326**, utilizing a single fiber link **314a** as illustrated in **FIG. 6B** (page 6 lines 59 to 61, paragraph **[0050]**). TC-Layer/MAC **305** block can include OLT, ONU or ONT

protocol stacks such as specified in ITU G.984 and IEEE 802.3ah (page 5 lines 29-35, paragraph **[0044]**). OLT, ONU or ONT TC-Layer/MAC block **305** sends data to modulator (MOD) **309a** block of optical transceiver module **326** (page 5 lines 38-68, paragraphs **[0044-0045]**). MOD **309a** block performs m-ary modulation on the data which is then conditioned and provided to Driver **312a** (page 5 lines 80 to 98, paragraph **[0046]**). Driver **312a** drives an optical transmitter **313a** which transmits light in response to signals received from Driver **312a** (page 5 lines 99 to 106, paragraph **[0046]**). Received light transmissions are received by an optical detector such as photo diode PD **315a** which provides an electrical signal (photocurrent) to transimpedance amplifier (TIA) **316a** that converts the photocurrent into an electrical voltage signal (page 5 lines 107 to 115, paragraph **[0047]**). The electrical voltage signal is provided to a linear amplifier (LA) **317a** that amplifies the signal to provide increase resolution to the signal which is then provided to Clock Data Recovery (CDR) and Equalization block (EQ) **320a** (page 5 lines 115 to 122, paragraph **[0047]**). CDR and EQ block **320a** performs equalization on the received data and recovers clock and data signals which is then provided to demodulator **323a** which performs m-ary demodulation on the received data that is then provided to OLT TC-Layer **305** (page 5 line 122 to page 6 line 15, paragraph **[0047]**). Optical transceiver module **326** can confirm to industry form factor standards such as SFP SFP+ and XFP and such standards include electrical interfaces used to interface to such systems as an OLT, ONU or ONT (page 6 lines 19 to 35, paragraph **[0048]**). Communications from optical transceiver module **326** can be continuous or burst mode (page 4 lines 7 to 12, paragraph **[0038]**) as well use two different wavelengths with one wavelength used in each direction (page 4 lines 20 to 25, paragraph **[0039]**).

Electronic Patent Application Fee Transmittal

Application Number:	12512968
Filing Date:	30-Jul-2009
Title of Invention:	SYSTEM AND METHOD FOR PERFORMING HIGH-SPEED COMMUNICATIONS OVER FIBER OPTICAL NETWORKS
First Named Inventor/Applicant Name:	Alexander I. Soto
Filer:	Alexander Ivan Soto
Attorney Docket Number:	UBI-002C

Filed as Small Entity

Utility under 35 USC 111(a) Filing Fees

Description	Fee Code	Quantity	Amount	Sub-Total in USD($)
Basic Filing:				
Pages:				
Claims:				
Miscellaneous-Filing:				
Petition:				
Patent-Appeals-and-Interference:				
Post-Allowance-and-Post-Issuance:				
Extension-of-Time:				
Extension - 1 month with $0 paid	2251	1	75	75

Description	Fee Code	Quantity	Amount	Sub-Total in USD($)
Miscellaneous:				
			Total in USD ($)	**75**

Electronic Acknowledgement Receipt

EFS ID:	15151656
Application Number:	12512968
International Application Number:	
Confirmation Number:	6685
Title of Invention:	SYSTEM AND METHOD FOR PERFORMING HIGH-SPEED COMMUNICATIONS OVER FIBER OPTICAL NETWORKS
First Named Inventor/Applicant Name:	Alexander I. Soto
Customer Number:	93749
Filer:	Alexander Ivan Soto
Filer Authorized By:	
Attorney Docket Number:	UBI-002C
Receipt Date:	07-MAR-2013
Filing Date:	30-JUL-2009
Time Stamp:	23:35:51
Application Type:	Utility under 35 USC 111(a)

Payment information:

Submitted with Payment	yes
Payment Type	Credit Card
Payment was successfully received in RAM	$75
RAM confirmation Number	24588
Deposit Account	
Authorized User	

File Listing:

Document Number	Document Description	File Name	File Size(Bytes)/ Message Digest	Multi Part /.zip	Pages (if appl.)

1	Appeal Brief Filed	Appeal_Brief_Amendment.pdf	87697 f2c6174ab9f640cfd32c62439e698e4c836d3b5c	no	4
Warnings:					
Information:					
2	Fee Worksheet (SB06)	fee-info.pdf	30539 b965f1c21a202b1282ddfe2649f73946bf794d6f	no	2
Warnings:					
Information:					
			Total Files Size (in bytes):	118236	

This Acknowledgement Receipt evidences receipt on the noted date by the USPTO of the indicated documents, characterized by the applicant, and including page counts, where applicable. It serves as evidence of receipt similar to a Post Card, as described in MPEP 503.

New Applications Under 35 U.S.C. 111
If a new application is being filed and the application includes the necessary components for a filing date (see 37 CFR 1.53(b)-(d) and MPEP 506), a Filing Receipt (37 CFR 1.54) will be issued in due course and the date shown on this Acknowledgement Receipt will establish the filing date of the application.

National Stage of an International Application under 35 U.S.C. 371
If a timely submission to enter the national stage of an international application is compliant with the conditions of 35 U.S.C. 371 and other applicable requirements a Form PCT/DO/EO/903 indicating acceptance of the application as a national stage submission under 35 U.S.C. 371 will be issued in addition to the Filing Receipt, in due course.

New International Application Filed with the USPTO as a Receiving Office
If a new international application is being filed and the international application includes the necessary components for an international filing date (see PCT Article 11 and MPEP 1810), a Notification of the International Application Number and of the International Filing Date (Form PCT/RO/105) will be issued in due course, subject to prescriptions concerning national security, and the date shown on this Acknowledgement Receipt will establish the international filing date of the application.

UNITED STATES PATENT AND TRADEMARK OFFICE

UNITED STATES DEPARTMENT OF COMMERCE
United States Patent and Trademark Office
Address: COMMISSIONER FOR PATENTS
P.O. Box 1450
Alexandria, Virginia 22313-1450
www.uspto.gov

APPLICATION NO.	FILING DATE	FIRST NAMED INVENTOR	ATTORNEY DOCKET NO.	CONFIRMATION NO.
12/512,968	07/30/2009	Alexander I. Soto	UBI-002C	6685

93749 7590 01/08/2013

Alexander Soto
7673 Hazard Center Dr.
San Diego, CA 92108

EXAMINER

ART UNIT	PAPER NUMBER

DATE MAILED: 01/08/2013

Please find below and/or attached an Office communication concerning this application or proceeding.

PTO-90C (Rev. 10/03)

Notification of Non-Compliant Appeal Brief (37 CFR 41.37)	Application No. 12/512,968	Applicant(s) Soto, et. al.	
	Examiner Augustin Bello	Art Unit 2613	

--The MAILING DATE of this communication appears on the cover sheet with the correspondence address--

The Appeal Brief filed on *December 16, 2012* is defective for failure to comply with one or more provisions of 37 CFR 41.37(c).

To avoid dismissal of the appeal, applicant must file an amended brief or other appropriate correction (see MPEP 1205.03) within **ONE MONTH or THIRTY DAYS** from the mailing date of this Notification, whichever is longer. **EXTENSIONS OF THIS TIME PERIOD MAY BE GRANTED UNDER 37 CFR 1.136.**

1. ☐ The brief does not contain the items required under 37 CFR 41.37(c), or the items are not under the proper heading or in the proper order.

2. ☒ (a) The brief does not contain a concise explanation of the subject matter defined in each of the rejected independent claims, referring to the specification in the Record by page and line number or by paragraph number and to the drawings, if any, by reference characters; and/or (b) the brief fails to identify, for each rejected independent claim and for each dependent claim argued separately that contains a means plus function or step plus function recitation under 35 U.S.C. 112, sixth paragraph, the structure, material, or acts described in the specification as corresponding to each claimed function with reference to the specification in the Record by page and line number or paragraph number, and to the drawings, if any, by reference characters (37 CFR 41.37(c)(1)(iii)).

3. ☐ The brief does not contain a correct copy of the appealed claims as an appendix thereto (37 CFR 41.37(c)(1)(v)).

4. ☒ Other (including any explanation in support of the above items):

Section V (Section VIII) Summary of Claimed Subject Matter is incorrect because it contains mappings to the printed publication which is not part of the official record. .

The Summary must identify and map all independent claims SEPARATELY on appeal to the Specification by page and line number or paragraph number (if used in the original specification) and drawings if any by reference characters.

You do not need to file another appeal brief in its entirety; just the corrected section can be submitted .

M. Twitty, Paralegal
(571) 272-7750
Q. Gould, Supervisory Paralegal
(571) 272-9797

BEFORE THE UNITED STATES PATENT AND TRADEMARK OFFICE BOARD OF APPEALS AND INTERFERENCES

In re Application of:
Alexander Soto et al.

Patent Application No.: **12/512,968**

Filed on: **July 30, 2009**

For: **System and Method for Performing High-Speed Communications Over Fiber Optical Networks**

Group Art Unit: **2613**

Examiner: **Bello, Agustin**

APPELLANT'S BRIEF PER 37 C.F.R. §41.37

BOARD OF PATENT APPEALS & INTERFERENCES
Director for Patents and Trademarks
PO Box 1450
Alexandria, VA 22313-4150

Sir:

This is an appeal from the Examiner of Group Art Unit 2613 rejecting claims 1-21, which are set forth in a CLAIM APPENDIX hereto and which together comprise all claims remaining in the application.

TABLE OF CONTENTS

	Section	Page
	IDENTIFICATION	1
	TABLE OF CONTENTS	2
I.	REAL PARTY IN INTEREST	3
II.	RELATED APPEALS AND INTERFERENCES	4
III.	STATUS OF CLAIMS	5
IV.	STATUS OF AMENDMENTS	6
V.	SUMMARY OF THE CLAIMED SUBJECT MATTER	7
VI.	GROUNDS OF REJECTION TO BE REVIEWED ON APPEAL	9
VII.	ARGUMENT AND DISCUSSION	10
	CONCLUSION AND SIGNATURE	17
	CLAIMS APPENDIX	18
	EVIDENCE APPENDIX	None
	RELATED PROCEEDINGS APPENDIX	None

I. REAL PARTY IN INTEREST

All rights in the above-identified pending U.S. Patent Application are owned by the named inventors, Alexander Soto and Walter Soto.

II. RELATED APPEALS AND INTERFERENCES

There are no other prior or pending appeals, interferences or judicial proceedings known to Appellants or Appellants' legal representative that may be related to, be directly affected by or bear on the Board's decision in this appeal.

III. STATUS OF CLAIMS

CLAIM	STATUS	CLAIM	STATUS
1	Rejected & Appealed	12	Rejected & Appealed
2	Rejected & Appealed	13	Rejected & Appealed
3	Rejected & Appealed	14	Rejected & Appealed
4	Rejected & Appealed	15	Rejected & Appealed
5	Rejected & Appealed	16	Rejected & Appealed
6	Rejected & Appealed	17	Rejected & Appealed
7	Rejected & Appealed	18	Rejected & Appealed
8	Rejected & Appealed	19	Rejected & Appealed
9	Rejected & Appealed	20	Rejected & Appealed
10	Rejected & Appealed	21	Rejected & Appealed
11	Rejected & Appealed		

Claims 1-21 were filed with the present application on July 30, 2009. Claims 1, 4-7, 9-10, 13-15, 17-18 and 21 were amended by Amendment filed on May 16, 2012.

By Final Office Action mailed on July 17 2012, Examiner Bello rejected claims 1, 3-10, 12-18, and 20-21 under 35 U.S.C. §102(e) for anticipation by Brede (Patent No. US 6,603,822 B2), and rejected claims 2, 11 and 19 under 35 U.S.C. §103(a) for unpatentability over Brede in further view of Aronson (Patent Application Pub. No. US 2007/0031153).

IV. STATUS OF AMENDMENTS

This appeal is taken from the second and Final Office action mailed July 17, 2012.

V. SUMMARY OF THE CLAIMED SUBJECT MATTER

Optical transceiver modules systems are proposed that provide for high-speed communications over fiber optic networks. The optical transceiver modules may include the use of the one or more of the following techniques either individually or in combination: m-ary modulation; channel equalization; demultiplexing across multiple fibers, coding and error correction. M-ary modulation allows for increased data throughput for a given line rate due to an increase in the number of bits per symbol transmitted. Channel equalization reduces the effects of temporal distortions allowing for increased reach. Demultiplexing across multiple fibers allows lower lines rates for a given data throughput rate due to the increased aggregate data throughput from the multiplexing. Coding and error correction allows for a greater selection of qualifying optical components that can be used in the network and complements m-ary modulation and channel equalization for overall system performance improvement as measured by energy per bit transmitted. These methods when combined (in part or in total) increase the data throughput and reach for fiber optic networks. For PONs in particular, these methods may increase the number of client ONU/ONTs as well as the distance between an Optical Line Terminal (OLT) and client Optical Network Unit (ONU) or client Optical Network Terminal (ONT) by utilizing lower line rates combined with higher symbol rates as compared to a conventional communication system of equivalent data throughput that utilize raw higher modulation line rates with binary symbols while decreasing the costs of client ONU/ONTs.

In independent claims 1, 10 and 18 the claimed optical transceiver module is provided as only an example and not an admission that the claims are limited to any particular embodiment in **FIG. 6B** in view of **FIG. 4** and **FIG. 3** and described from page 5 at paragraph [0044] to page 6 at paragraph [0055]. Referencing **FIG. 6B** as an exemplary embodiment of the invention, the optical transceiver module **326** includes: a system interface (while not specifically labeled is shown by direction lines from outer coder **307a** and outer decoder **324a** of the optical transceiver module **326** to the TC-Layer **305** block of Communication Logic & Memory **131,132** which can exemplify an OLT, ONU, or ONT depending upon the embodiment); modulator (MOD) **309a** and digital to analog converter **310a** capable of generating an m-ary modulation signal representative of binary data signal input into MOD **309a**; a driver **312a** capable of amplifying the m-

ary modulation signal to drive an optical transmitter; optical transmitter laser diode (LD) **313a** capable of emitting an optical signal onto optical fiber **314a**; optical detector photodiode (PD) **315a** and transimpedance amplifier (TIA) **316a** capable of receiving an optical data signal and generate an electrical signal representative of the optical data signal; a linear amplifier (LA) **317a** capable of amplifying the received electrical signal; a clock data recovery and equalization unit (CDR & EQ) **320a** capable of equalizing the optical signal channel and recovering the clock data timing of the received data, and de-modulator **323a** capable of demodulating the received electrical data by generating an electrical binary signal representative of the received m-ary electrical data.

VI. GROUNDS OF REJECTION TO BE REVIEWED ON APPEAL

Whether the subject matter of claims 1, 3-10, 12-18, and 20-21 would have been anticipated by U.S. Patent No. 6,603,822 B2 filed by Brede *et al.*("Brede") within the meaning of 35 U.S.C §102(e); as held in the Final Office Action mailed on July 17, 2012: whether the subject matter of claims 2, 11, and 19 would have been obvious in view of the combination of Brede in further view of U.S. Patent Application Publication No. 2007/0031153 A1 filed by Aronson *et al.* ("Aronson") within the meaning of 35 U.S.C. §103(a); as held in the Final Office Action mailed on July 17, 2012.

VII. ARGUMENT AND DISCUSSION

The Examiner has failed to present a valid *prima facie* case for the anticipation of claims 1, 3-10, 12-18, and 20-21 in view of Brede within the meaning of 35 U.S.C. §102(e), in the Final Office Action mailed on July 17, 2012.

Examiner fails to state a proper *prima facie* case for the anticipation of claims 1, 3-10, 12-18 and 20-12 in view of the Brede under 35 U.S.C. §102(e). The legal concept of *prima facie* is a procedural tool of examination which applies broadly to all arts. It allocates who has the burden of going forward with production of evidence in each step of the examination process. See *In re Rinehart*, 531 F.2d 1048, 189 USPQ 143 (CCPA 1976); *In re Linter*, 458 F.2d 1013, 173 USPQ 560 (CCPA 1972); *In re Saunders*, 444 F.2d 599, 170 USPQ 213 (CCPA 1971); *In re Tiffin*, 443 F.2d 394, 170 USPQ 88 (CCPA 1971), *amended*, 448 F.2d 791, 171 USPQ 294 (CCPA 1971); *In re Warner*, 379 F.2d 1011, 154 USPQ 173 (CCPA 1967), *cert. denied*, 389 U.S. 1057 (1968) see also M.P.E.P. 2142. <u>The Examiner bears the initial burden of factually supporting any prima facie conclusion of anticipation or obviousness.</u> If the Examiner does not produce a valid *prima facie* case, the appellants are under no obligation to submit evidence of non-anticipation or non-obviousness to rebut the Examiner's findings.

During patent examination, the pending claims must be given an interpretation that is reasonable and consistent with the specification. See *In re Prater*, 162 U.S.P.Q. 541, 550-5 1 (C.C.P.A. 1969); *In re Morris*, 44 U.S.P.Q.2d 1023, 1027-28 (Fed. Cir. 1997); see also M.P.E.P. § 2111 (describing the standards for claim interpretation during prosecution). Indeed, the specification is "the primary basis for construing the claims." See *Phillips v. A WH Corp.*, 41 5 F.3d 1303, 13 15 (Fed. Cir. 2005) (citations omitted). It is usually dispositive. See *id*. Interpretation of the claims must also be consistent with the interpretation that those skilled in the art would reach. See *In re Cortright*, 49 U.S.P.Q.2d 1464, 1468 (Fed. Cir. 1999); see also M.P.E.P. §2111. That is, recitations of a claim must be read as they would be interpreted by those of ordinary skill in the art. See *Rexnord Corp. v. Laliram Corp.*, 60 U.S.P.Q.2d 1851, 1854 (Fed. Cir. 2001); see also M.P.E.P. § 2111.01.

The Examiner's rejections fail to meet these requirements because, among other reasons, they rely on an unsupported and flawed conflation of Appellants' optical transceiver module for an Optical Line Terminal (OLT) as in claim 1 with the OLT itself which Brede calls a Host Digi-

tal Terminal (HDT) (Final Office Action page 8, section 5, paragraph 2). The Examiner's conflation is presented with assurance to explicit disclosure by Brede (Final Office Action page 9, lines 10-11) yet without specific citation beyond a broad reference to **FIG. 3** in Brede and is unsupported by any reasonable interpretation of the Appellants' claims and specification. Appellants' assert that a plain reading of Appellants' claims are drawn to limitations of an optical transceiver for an OLT, as in claim 1, and are not drawn to limitations to the OLT itself. Brede describes **FIG. 3** as an HDT with associated transmitters and receivers which those skilled in the arts may recognize as a former term for an OLT. Brede's HDT with associated transmitters and receivers can be conflated with Appellants' OLT. This is supported by Appellants' description of an OLT as "*the invention includes a method for communicating on a passive optical network between a central transmission point and a plurality of receiving client end points*" (paragraph [0022]) and "*The central transmission point includes an <u>optical line terminal</u>, and the end points are operative as transceivers in a passive optical network*" (paragraph [0023]) and "*a point-to-multipoint network architecture, wherein one OLT **150** is connected to a plurality of ONT(s) **160** and/or ONU(s) **155***" (paragraph [0043]) and **FIG. 2** and is supported by Brede's description of an HDT as "*<u>The HDT **12** coordinates</u> the telephony transport system including <u>control and communication</u> of many ISUs of the multi-point to point communication system **10***" (column 24, lines 40-43).

Thus the Examiner creates a flawed conflation of Brede's HDT/OLT with the Appellants' optical transceiver module for an OLT. Furthermore, the Examiner creates another flawed conflation in order to read into Appellants' claims when conflating Brede's central office building where Brede's HDT/OLT is located with Appellants' OLT (Final Office Action page 2, section 2, paragraph 2 and page 8, section 5, paragraph 2, lines 3-8). While the Appellants appreciate the need for Examiners to take broad interpretations of claims, the interpretations should be reasonable. Appellants assert that the Examiners conflations of Appellants' optical transceiver d to receive the continuous mode optical data signal on the second wavelength from the fiber iber optic cable and generate a representative second electrical signal representative of the continuous mode data signal;

Additionally, according to M.P.E.P. §2131, a case for anticipation requires that the reference must teach every element of the claim. "A claim is anticipated only if each and every ele-

ment as set forth in the claim is found, either expressly or inherently described, in a single prior art reference." *Verdegaal Bros. v. Union Oil Co. of California*, 814 F.2d 628, 631, 2 USPQ2d 1051, 1053 (Fed. Cir. 1987). The elements must be arranged as required by the claim, but this is not an *ipsissimis verbis* test, i.e., identity of terminology is not required. *In re Bond*, 910 F.2d 831, 15 USPQ2d 1566 (Fed. Cir. 1990). Because the hallmark of anticipation is prior invention, the prior art reference-in order to anticipate under 35 U.S.C. § 102-must not only disclose all elements of the claim within the four corners of the document, but must also disclose those elements "arranged as in the claim." Connell v. Sears, Roebuck & Co., 722 F.2d 1542, 1548 (Fed.Cir.1983). Anticipation requires more than disclosing all the elements, Net MoneyIn v. Verisign (Fed. Cir. 2008).

Even if one were to theoretically accept the Examiner's unsupported and flawed conflations previously discussed for the sake of argument, the Examiner's rejections still fail to meet the requirements of a case for anticipation because the Examiner's rejections fail to disclose all elements of the Appellants' claims and how those elements are arranged as in the Appellants' claims.

In regards to Appellants' independent claims 1, 10 and 18, limitations drawn to a modulator element disposed to electrically couple to the system interface are recited and the Examiner conflates Brede's "Network Interface" of **FIG. 3** (upper left side of figure) with Appellants' system interface and the Examiner conflates Brede's MCC modem (reference number **82** in **FIG. 3**) with the Appellants' modulator element. However, Brede's MCC modem **82** does not electrically couple to Brede's "Network Interface" but to CXMU logic **80** as clearly shown in **FIG. 3** and therefore Brede does not disclose a modulator as arranged in the Appellants' claims.

Limitations drawn to a driver element disposed to electrically couple to the modulator are recited in Appellants' independent claims and the Examiner conflates several of Brede's elements (reference **25** in **FIG. 4**, reference **82** in **Fig. 3**, reference **148** in **FIG. 21**, reference **246** in **FIG. 37**) with Appellants' driver element, all of which are flawed conflations. Brede's combiner **25** in **FIG. 4** is not a driver to amplify an m-ary signal to drive the optical transmitter as in Appellants' claims but a radio frequency combiner of 6MHz frequency bands. Reference **82** in **FIG. 3** is Brede's MCC modem which the Examiner already conflated with Appellants' modulator and therefore cannot be conflated with Appellants' driver. Reference **148** in **FIG. 21** is a

radio frequency amplifier before a filter **150** in MCC modem **82**. Reference **246** in **FIG. 37** is another radio frequency amplifier before a filter in an alternative embodiment of MCC modem **82**. The Examiner's rejections fail to properly recite Appellants' driver element in Brede nor does Brede disclose Appellants' driver element as arranged in Appellants' claims.

Limitations drawn to an optical transmitter disposed to emit a continuous mode optical data signal are recited in Appellants' claim 1 and limitations to an optical transmitter to emit a burst mode optical data signal are recited in Appellants' claim 10 however the Examiner conflates the same Brede element (reference **14** in **FIG. 3**, reference **501** in **FIG. 4**) for both of Appellants' distinctive claim elements. Therefore Examiner's rejections fail to properly recite either Appellants' continuous mode optical transmitter element of claim 1 or Appellants' burst mode optical transmitter element of claim 10 in Brede as well as how they are arranged in Appellants' claim.

Limitations drawn to an optical detector disposed to receive a burst mode optical data signal are recited in Appellants' claim 1 and limitations to an optical detector to receive a continuous mode optical data signal are recited in Appellants' claim 10 however the Examiner again conflates the same Brede element (reference **16** in **FIG. 3**, reference **502** in **FIG. 4**) for both of Appellants' distinctive claim elements. Therefore Examiner's rejections fail to properly recite either Appellants' burst mode optical detector element of claim 1 or Appellants' continuous mode optical detector element of claim 10 in Brede.

Limitations drawn to an amplifier to amplify an electrical signal to facilitate clock and data recovery are recited in Appellants' claims 1, 10 and 18 which the Examiner conflates to Brede's MCC modem **82** (reference number **82** in **FIG. 3**, reference **154** in **FIG. 22**, and reference **234** in **FIG. 37**). Reference **154** in **FIG. 22** is a voltage tuned filter located in MISU **66** of **FIG. 1** and reference **234** in **FIG. 37** is a radio frequency amplifier in the transmit path of MCC modem **82**. Therefore the Examiner's rejections fail to properly recite Appellants' amplifier element in Brede nor does Brede disclose Appellants' amplifier element as arranged in Appellants' claims.

Limitations drawn to a clock data recovery and equalization unit disposed to equalize a burst mode channel and recover clock data timing in claim 1 and to equalize a continuous mode channel and recover clock data timing in claim 10 are recited in Appellants' claims which the

Examiner conflates to Brede's reference **54** in **FIG. 2**, reference **168**,**172** in **FIG. 22**, reference **214**, **222** in **FIG. 22** and **FIG. 35**. Appellants can find no reference to Brede element **54** in **FIG. 2**. If the Examiner erred and meant Brede's CTSU element **54** in **FIG. 3** then Appellants note while ignoring functionality of the recited element that CTSU **54** is not even coupled to MCC modem **82** so further discussion is moot. Reference **168**,**171** in **FIG. 22**, **214**,**222** in **FIG. 22** and **FIG. 35** are references to different parts of MCC modem **82**. Therefore the Examiner's rejections fail to properly recite Appellants' clock data recovery and equalization unit element in Brede nor does Brede disclose Appellants' clock data recovery and equalization unit element as arranged in Appellants' claims.

Limitations drawn to a de-modulator disposed to electrically couple to the system interface are recited in Appellants' claims 1, 10 and 18 and the Examiner conflates Brede's "Network Interface" of **FIG. 3** (upper left side of figure) with Appellants' system interface and the Examiner conflates Brede's MCC modem **82** (reference number **174,176** in **FIG. 22**, reference **216** in **FIG. 26**, reference **366** in **FIG. 35** are all elements within MCC modem 82) with the Appellants' de-modulator element. Again, Brede's MCC modem **82** does not electrically couple to Brede's "Network Interface" but to CXMU logic **80** as clearly shown in **FIG. 3** and therefore Brede does not disclose a de-modulator as arranged in the Appellants' claims.

Additionally, in regards to Appellants' independent claims 10 and 18, the Examiner's rejections fail to address an Optical Network Unit (ONU) or Optical Network Terminal (ONT). For example in clam 10, which is drawn to limitations of an optical transceiver module for an ONU or ONT, the limitations to an interface for electrically coupling the optical transceiver module to an ONU or ONT have not been properly rejected to. The Examiner rejects claims 10 and 18 based on the same flawed conflations of Brede's HDT of **FIG. 3** which the Examiner conflates with the Appellants' optical transceiver module for an OLT. The Examiner fails to mention an ONU and conflating Brede's HDT/OLT of **FIG. 3** with an ONU is not only unsupported by Brede and inconsistent with Brede's **FIG. 1** but unsupported by any reasonable interpretation of Appellants' claims and specification, for example as shown in Appellants' **FIG. 2** and discussed in paragraph [0043].

Furthermore it is impossible for Brede to disclose an ONU or ONT as described in Appellants' claims and specification because Brede's network is a hybrid fiber coax network (HFC)

(element **11** in **FIG. 1**) and Brede's elements that transport information over the HFC distribution network **11** are performed by interface equipment in both the HDT **12** (as the head-end) and the ISUs **100 (**as clients of the HDT**)** (page 19 lines 1-5). The connection to, and thus the interface of, ISUs **100** (as represented by MISU **66** and HISU **68** in **FIG. 1**) are coaxial cables **30** and not optical fibers as would be required to read into Appellants' claims 10 and 18.

Claims 3-9 depend from independent claim 1, claims 12-18 depend from independent claim 10, and claims 20-21 depend from independent claim 18. If an independent claim is novel, then any claim depending there from is novel. *In re Fine,* 837 F.2d 1071, 5 USPQ.2d 1596 (Fed. Cir. 1988). Accordingly, for the reasons discussed above with respect to the base claims 1, 10 and 18, the rejections of claims 3-9, 12-17, and 20-21 are also improper.

The Examiner has failed to present valid *prima facie* cases for the obviousness of: claims 2, 11, and 19 in view of the combination of Brede in further view of U.S. Patent Application Publication NO. 2007/0031153 filed by Aronson *et al.* ("Aronson") within the meaning of 35 U.S.C. §103(a); in the Final Office Action mailed on July 17, 2012.

Examiner fails to state a proper *prima facie* case for the obviousness of claims 2, 11, and 19 in view of the combination of Brede and Aronson under 35 U.S.C. §103(a).

According to M.P.E.P. §2142, a *prima facie* case for obviousness requires a showing that the recited reference combination (of Brede and Aronson) must teach or suggest **all** the claim limitations; and a teaching or suggestion to make the claimed combination and a reasonable expectation of success must both be found in the recited reference combination without importing information from Applicants' disclosure.

As the Examiner notes in the Final Office Action Brede fails to mention a form factor for an optical transceiver module, this is because Brede never mentions **FIG. 3** is an optical transceiver module nor does Brede ever use optical transceiver modules as even elements **14** and **16** of **FIG. 3** are discrete transmit and receive elements not a transceiver element. Additionally Brede describes the HDT **12** of **FIG. 3** (dotted box of **FIG. 3**), as being up to 100 feet away from the optical and electrical conversion elements **14** and **16** (Brede col. 25, lines 7-9) with connections between them establish via coaxial cables **22**,**28** which is desirable as this allows flexibility of deployment of the HDT within the central office building. Thus there is an unreasonable ex-

pectation of success of incorporating Brede **FIG. 3** into an XFP form factor as someone skilled in the arts would find such incorporation impractical to impossible. While the Examiner argues such distance between elements is irrelevant since Appellants' fail to recite any limitations that preclude such distance, Appellants' respectfully disagree. All of the Appellants' listed form factor (i.e., SFP; SFP+; XFP; X2; XENPAK; XPA; and 300 pin transceiver form factors) specify physical dimensions for the optical transceiver module. For example, the physical dimensions for an SFP optical transceiver module is height 8.5mm (0.33 inches), width 13.4mm (0.53 inches), depth 56.5mm (2.22 inches) and for an XPF optical transceiver module is height 8.5mm (0.33 inches), width 18.35mm (0.72 inches), depth 78mm (3.10 inches). While the physical dimensions do not dictate distance between elements inside the form factor they do dictate a limitation to their distances. Those skilled in the arts would find it physically impossible and thus an unreasonable expectation of success to achieve 100 feet of separation between Brede's HDT **12** and optical and electrical conversion elements **14** and **16** as shown in **FIG. 3** into an XFP form factor as suggested by the Examiner's combination of Brede and Aronson.

Additionally Brede's **FIG. 3** has interface to four fibers, reference elements **24** and **26** (two used for transmission and two used for reception) while Aronson's listed form factors are at most dual fiber interfaces (as shown in **FIG. 1** and **FIG. 2**), as are XFPs. Thus the Examiner's combination of Brede and Aronson includes an un-suggestion modification to Brede that would eliminate Brede's desirable feature of redundancy of transmissions as well a requirement for synchronization of the communication channel and to avoid interference (page 56, lines 38-56).

If the proposed modification would render the prior art invention (Brede) being modified unsatisfactory for its intended purpose, then there is no suggestion or motivation to make the proposed modification. *In re Gordon*, 733 F.2d 900, 221 USPQ 1125 (Fed. Cir. 1984) *See M.P.E.P. §2143.01(V).* Obviousness cannot be established by engaging in a hindsight reconstruction of the claimed invention using the Applicants' invention as a template and selecting elements from references to fill the gaps. *In re Gorman*, 933 F.2d 982, 986, 18 USPQ2d 1885, 1888 (Fed. Cir. 1991).

CONCLUSION AND SIGNATURE

For the foregoing reasons, the Board is requested to reverse the anticipation rejections of claims 1, 3-10, 12-18 and 20-21 over Brede and the Board is requested to reverse the obviousness rejections of claims 2, 11 and 19 over the foregoing recited reference combinations comprising Brede and Aronson.

The $315 fee required under 37 C.F.R. §41.20(b)(2) is tendered electronically herewith.

Respectfully submitted,

/Alexander Soto/

Alexander Soto
Customer No. 93749
7673 Hazard Center Dr.
San Diego, CA 92108
858-527-2397
Alexander.I.Soto@gmail.com

Dec 15, 2012

CLAIMS APPENDIX

1.) An optical transceiver module for an Optical Line Terminal (OLT); the optical transceiver module capable of transmitting continuous mode optical data signals on a first wavelength according to an m-ary modulation format and to equalize an optical data channel responsive to a received burst mode optical data signal on a second wavelength over a fiber optic cable, the optical transceiver module comprising:

a system interface for electrically coupling the optical transceiver module to the OLT and for communicating electrical binary data signals between the optical transceiver module and the OLT;

a modulator electrically coupled to the system interface and configured to receive a first electrical binary data signal and to generate according to an m-ary modulation method a first electrical m-ary modulation signal representative of the data in the first electrical binary data signal;

a driver electrically coupled to the modulator configured to amplify the first electrical_m-ary modulation signal in order to drive an optical transmitter of the optical transceiver module;

an optical transmitter electrically coupled to the driver configured to emit the optical continuous mode signal on the first wavelength on the fiber optic cable responsive to and representative of the amplified first electrical_m-ary modulation signal;

an optical detector configured to receive the burst mode optical data signal on the second wavelength from the fiber optic cable and generate a second electrical signal representative of the burst mode optical data signal;

an amplifier electrically coupled to the optical detector and configured to amplify the second electrical signal to facilitate clock and data recovery of the second electrical signal;

a clock data recovery and equalization unit electrically coupled to the amplifier and configured to equalize a burst mode channel, recover clock data timing and to generate a second electrical_m-ary modulation signal; and

a de-modulator electrically coupled to the system interface and electrically coupled to the clock data recovery and equalization unit and configured to generate a

second electrical_binary data signal representative of the data in the second electrical m-ary modulation signal; whereby

the optical transceiver module converts electrical binary data communications from the OLT to optical m-ary data communications for communications over the fiber optical cable.

2.) The optical transceiver module of claim 1, wherein the form factor of the optical transceiver module is selected from the group consisting essentially of: SFP; SFP+; XFP; X2; XENPAK; XPA; and 300 pin transceiver form factors.

3.) The optical transceiver module of claim 1, wherein the m-ary modulation method is selected from the group essentially consisting of:

quadrature amplitude modulation (QAM);
QAM-32;
QAM-256;
quadrature phase shift keying (QPSK);
differential QPSK;
return-to-zero QPSK;
dual-polarized QPSK;
orthogonal frequency division multiplexing (OFDM);
pulse amplitude modulation (PAM);
PAM-5; and
PAM-17;

4.) The optical transceiver module of claim 1, wherein equalizing routine to equalize the burst mode channel employed by the clock data recovery and equalization unit is selected from the group consisting of: a blind equalization routine which does not use a known training sequence and decision-directed equalization routine using a known training sequence.

5.) The optical transceiver module of claim 4, wherein the known training sequence of a decision-directed equalization routine is multiplexed in a frame of the received burst mode optical data signal.

6.) The optical transceiver module of claim 1, further comprising:

means for storing a first set of determined settings which improve processing of received burst mode data from a first client on a passive optical network associated with a first optical channel;

means for loading a predetermined second set of settings which improve prove processing of received burst mode data from a second client on the passive optical network associated with a second optical channel prior to processing received burst mode data from the second client.

7.) The optical transceiver module of claim 1, further comprising:

an encoder electrically coupled to the system interface and_coupled electrically to the input of the modulator and configured to encode the first electrical binary data signal as input to the modulator with a method designed to improve the energy per bit required to deliver the data transmitted by the optical transceiver module; and

a decoder electrically coupled to the system interface and coupled electrically to the output of the demodulator and configured to decode the second electrical_binary data signal and correct for errors.

8.) The optical transceiver module of claim 7, wherein the encoder or decoder method is selected from the group essentially consisting of: Reed-Solomon coding; trellis coding; Low-density parity-check coding, and Turbo coding.

9.) The optical transceiver module of claim 1, wherein the optical transceiver module and OLT are part of a passive optical network and the passive optical network is a coarse wavelength-division multiplexing (CWDM) or dense wavelength-division multiplexing (DWDM) passive optical network and an M number of wavelengths are transmitted and an N number of wavelengths are received over the fiber optic cable, the optical transceiver module further comprising:

an M number of modulators coupled respectively to an M number of drivers coupled respectively to an M number of optical transmitters such that a respective M number of optical m-ary modulated signals are transmitted over the fiber optic cable; and

an N number of optical detectors coupled respectively to an N number of amplifiers coupled respectively to an N number of clock and data recovery units coupled respectively to an N number of equalizers coupled to an N number of de-modulators such that a respective N number of binary modulated electrical signals are generated responsive to an N number of received optical data signals received over the fiber optic cable.

10.) An optical transceiver module for an Optical Network Unit (ONU) or Optical Network Terminal (ONT); the optical transceiver module capable of transmitting burst mode optical data signals on a first wavelength according to an m-ary modulation format and to equalize an optical data channel responsive to a received continuous mode optical data signal on a second wavelength over a fiber optic cable, the optical transceiver module comprising:

a system interface for electrically coupling the optical transceiver module to the ONU or ONT and for communicating electrical binary data signals between the optical transceiver module and the ONU or ONT;

a modulator electrically coupled to the system interface and configured to receive a first electrical binary data signal and to generate according to an m-ary modulation method a first electrical m-ary modulation signal representative of the data in the first electrical binary data signal;

a driver electrically coupled to the modulator configured to amplify the first m-ary modulation signal in order to drive an optical transmitter of the optical transceiver module;

an optical transmitter electrically coupled to the driver configured to emit the burst mode optical signal on the first wavelength on the fiber optic cable responsive to and representative of the amplified first electrical m-ary modulation signal;

an optical detector configured to receive the continuous mode optical data_signal on the second wavelength from the fiber optic cable and generate a representative second electrical signal representative of the continuous mode data signal;

an amplifier electrically coupled to the optical detector and configured to amplify the second electrical signal to facilitate clock and data recovery of the second electrical signal;

a clock data recovery and equalization unit electrically coupled to the amplifier and configured to equalize a continuous mode channel, recover clock data timing and to generate a second electrical m-ary modulation signal; and

a de-modulator electrically coupled to the system interface and electrically coupled to the clock data recovery and equalization unit and configured to generate a second electrical binary data signal representative of the data in the second electrical m-ary modulation signal; whereby

the optical transceiver module converts electrical binary data communications from the ONU or ONT to optical m-ary data communications for communications over the fiber optical cable.

11.) The optical transceiver module of claim 10, wherein the form factor of the optical transceiver module is selected from the group consisting essentially of: SFP; SFP+; XFP; X2; XENPAK; XPA; and 300 pin transceiver form factors.

12.) The optical transceiver module of claim 10, wherein the m-ary modulation method is selected from the group essentially consisting of:

quadrature amplitude modulation (QAM);
QAM-32;
QAM-256;
quadrature phase shift keying (QPSK);
differential QPSK;
return-to-zero QPSK;
dual-polarized QPSK;
orthogonal frequency division multiplexing (OFDM);
pulse amplitude modulation (PAM);
PAM-5; and
PAM-17.

13.) The optical transceiver module of claim 10, wherein equalizing routine to equalize the continuous mode channel employed by the clock data recovery and equalization unit is

selected from the group consisting of: a blind equalization routine which does not use a known training sequence and decision-directed equalization routine using a known training sequence.

14.) The optical transceiver module of claim 13, wherein the known training sequence of a decision-directed equalization routine is multiplexed in a frame of the received continuous mode optical data signal.

15.) The optical transceiver module of claim 13, further comprising:

an encoder electrically coupled to the system interface and coupled electrically to the input of the modulator and configured to encode the first electrical binary data signal as input to the modulator with a method designed to improve the energy per bit required to deliver the data transmitted by the optical transceiver module; and

a decoder electrically coupled to the system interface and_coupled electrically to the output of the demodulator and configured to decode the second electrical binary data signal and correct for errors.

16.) The optical transceiver module of claim 15, wherein the encoder or decoder method is selected from the group essentially consisting of: Reed-Solomon coding; trellis coding; Low-density parity-check coding, and Turbo coding.

17.) The optical transceiver module of claim 10, wherein the optical transceiver module and ONU or ONT are part of a passive optical network and the passive optical network_is a coarse wavelength-division multiplexing (CWDM) or dense wavelength division multiplexing (DWDM) passive optical network and an M number of wavelengths are transmitted and an N number of wavelengths are received over the fiber optic cable, the optical transceiver module further comprising:

an M number of modulators coupled respectively to an M number of drivers coupled respectively to an M number of optical transmitters such that a respective M number of optical m-ary modulated signals are transmitted over the fiber optic cable; and

an N number of optical detectors coupled respectively to an N number of amplifiers coupled respectively to an N number of clock and data recovery units coupled

respectively to an N number of equalizers coupled to an N number of de-modulators such that a respective N number of binary modulated electrical signals are generated responsive to an N number of received optical data signals received over the fiber optic cable.

18.) In a passive optical network having an Optical Line Terminal (OLT), or an Optical Network Unit (ONU) or an Optical Network Terminal (ONT) with an optical transceiver module having an optical transmitter for transmitting communications on a first wavelength and an optical detector for receiving communications on a second wavelength, a method for m-ary modulation communication across the passive optical network generated from within the optical transceiver module comprising the steps of:

(a) receiving a first electrical binary data signal from the OLT, ONU or ONT through a system interface of the optical transceiver module wherein the optical transceiver module is electrically coupled to the OLT, ONU or ONT;

(b) converting the first electrical binary data signal in the optical transceiver module according to an m-ary modulation method to produce a first electrical m-ary modulation signal;

(c) amplifying the first electrical m-ary modulation signal to drive the optical transmitter of the optical transceiver module;

(d) emitting a first optical signal on the first wavelength responsive to and representative of the amplified first electrical m-ary modulation signal from the optical transmitter of the optical transceiver module into an optical fiber;

(e) receiving a second optical signal on the second wavelength from the optical fiber and producing an electrical signal from the optical detector of the optical transceiver module;

(f) amplifying the electrical signal to facilitate clock and data recovery in the optical transceiver module;

(g) equalizing the amplified electrical signal and recovering clock data information to produce a second m-ary modulation signal in the optical transceiver module;

(h) demodulating the second m-ary modulation signal according to an m-ary modulation method to produce a second electrical binary signal; and

(i) transmitting the second electrical binary signal to the OLT, ONU or ONT through the system interface of the optical transceiver module; whereby

the optical transceiver module communicates with the OLT, ONU or ONT using binary signals and communicates optically over the passive optical network using the m-ary modulation method.

19.) The method of claim 18, whereby the form factor of the optical transceiver module is selected from the group consisting essentially of: SFP; SFP+; XFP; X2; XENPAK; XPA; and 300 pin transceiver form factors.

20.) The method of claim 18, whereby the m-ary modulation method is selected from the group consisting essentially of:

quadrature amplitude modulation (QAM);
QAM-32;
QAM-256;
quadrature phase shift keying (QPSK);
differential QPSK;
return-to-zero QPSK;
dual-polarized QPSK;
orthogonal frequency division multiplexing (OFDM);
pulse amplitude modulation (PAM);
PAM-5; and
PAM-17.

21.) The method of claim 18, further comprising the steps of:

(j) storing at the OLT a first set of determined settings which improve processing of received burst mode data from a first ONU or ONT on the passive optical network associated with a first optical channel; and

(k) loading at the OLT a predetermined second set of settings which improve processing of received burst mode data from a second ONU or ONT on the passive optical

network associated with a second optical channel prior to processing received burst mode data from the second ONU or ONT.

Electronic Patent Application Fee Transmittal

Application Number:	12512968
Filing Date:	30-Jul-2009
Title of Invention:	SYSTEM AND METHOD FOR PERFORMING HIGH-SPEED COMMUNICATIONS OVER FIBER OPTICAL NETWORKS
First Named Inventor/Applicant Name:	Alexander I. Soto
Filer:	Alexander Ivan Soto
Attorney Docket Number:	UBI-002C

Filed as Small Entity

Utility under 35 USC 111(a) Filing Fees

Description	Fee Code	Quantity	Amount	Sub-Total in USD($)
Basic Filing:				
Pages:				
Claims:				
Miscellaneous-Filing:				
Petition:				
Patent-Appeals-and-Interference:				
Filing a brief in support of an appeal	2402	1	315	315
Post-Allowance-and-Post-Issuance:				
Extension-of-Time:				

Description	Fee Code	Quantity	Amount	Sub-Total in USD($)
Miscellaneous:				
			Total in USD ($)	**315**

Electronic Acknowledgement Receipt

EFS ID:	14480714
Application Number:	12512968
International Application Number:	
Confirmation Number:	6685
Title of Invention:	SYSTEM AND METHOD FOR PERFORMING HIGH-SPEED COMMUNICATIONS OVER FIBER OPTICAL NETWORKS
First Named Inventor/Applicant Name:	Alexander I. Soto
Customer Number:	93749
Filer:	Alexander Ivan Soto
Filer Authorized By:	
Attorney Docket Number:	UBI-002C
Receipt Date:	16-DEC-2012
Filing Date:	30-JUL-2009
Time Stamp:	22:24:44
Application Type:	Utility under 35 USC 111(a)

Payment information:

Submitted with Payment	yes
Payment Type	Credit Card
Payment was successfully received in RAM	$315
RAM confirmation Number	9090
Deposit Account	
Authorized User	

File Listing:

Document Number	Document Description	File Name	File Size(Bytes)/ Message Digest	Multi Part /.zip	Pages (if appl.)

1	Appeal Brief Filed	Appeal_Brief_UBI-002C_15Oct 12.pdf	219600 1a8412eeacf30c7099a3f92500c7664351100eaa	no	26
Warnings:					
Information:					
2	Fee Worksheet (SB06)	fee-info.pdf	30595 cdcc4afc8b29cfb6d31e2b476ad144d54d0c9a6f	no	2
Warnings:					
Information:					
			Total Files Size (in bytes):	250195	

This Acknowledgement Receipt evidences receipt on the noted date by the USPTO of the indicated documents, characterized by the applicant, and including page counts, where applicable. It serves as evidence of receipt similar to a Post Card, as described in MPEP 503.

<u>New Applications Under 35 U.S.C. 111</u>
If a new application is being filed and the application includes the necessary components for a filing date (see 37 CFR 1.53(b)-(d) and MPEP 506), a Filing Receipt (37 CFR 1.54) will be issued in due course and the date shown on this Acknowledgement Receipt will establish the filing date of the application.

<u>National Stage of an International Application under 35 U.S.C. 371</u>
If a timely submission to enter the national stage of an international application is compliant with the conditions of 35 U.S.C. 371 and other applicable requirements a Form PCT/DO/EO/903 indicating acceptance of the application as a national stage submission under 35 U.S.C. 371 will be issued in addition to the Filing Receipt, in due course.

<u>New International Application Filed with the USPTO as a Receiving Office</u>
If a new international application is being filed and the international application includes the necessary components for an international filing date (see PCT Article 11 and MPEP 1810), a Notification of the International Application Number and of the International Filing Date (Form PCT/RO/105) will be issued in due course, subject to prescriptions concerning national security, and the date shown on this Acknowledgement Receipt will establish the international filing date of the application.

PTO/SB/31 (09-12)
Approved for use through 01/31/2013. OMB 0651-0031
U.S. Patent and Trademark Office; U.S. DEPARTMENT OF COMMERCE
Under the Paperwork Reduction Act of 1995, no persons are required to respond to a collection of information unless it displays a valid OMB control number.

NOTICE OF APPEAL FROM THE EXAMINER TO THE PATENT TRIAL AND APPEAL BOARD

Docket Number (Optional): UBI-002C

I hereby certify that this correspondence is being facsimile transmitted to the USPTO EFS-Web transmitted to the USPTO, or or deposited with the United States Postal Service with sufficient postage as first class mail in an envelope addressed to "Commissioner for Patents, P.O. Box 1450, Alexandria, VA 22313-1450" [37 CFR 1.8(a)]

on _____

Signature _____

Typed or printed name _____

In re Application of: Soto et al.

Application Number: 12/512,968

Filed: July 30, 2009

For: System and Method for Performing High-Speed Communications Over Fiber Optical Networks

Art Unit: 2613

Examiner: Bello, Agustin

Applicant hereby **appeals** to the Patent Trial and Appeal Board from the last decision of the examiner.

The fee for this Notice of Appeal is (37 CFR 41.20(b)(1)) $ 630

☑ Applicant claims small entity status. See 37 CFR 1.27. Therefore, the fee shown above is reduced by half, and the resulting fee is: $ 315

☐ A check in the amount of the fee is enclosed.

☑ Payment by credit card. Form PTO-2038 is attached.

☐ The Director has already been authorized to charge fees in this application to a Deposit Account.

☐ The Director is hereby authorized to charge any fees which may be required, or credit any overpayment to Deposit Account No. _____ .

☐ A petition for an extension of time under 37 CFR 1.136(a) (PTO/SB/22) is enclosed.

WARNING: Information on this form may become public. Credit card information should not be included on this form. Provide credit card information and authorization on PTO-2038.

I am the

☑ applicant/inventor.

☐ assignee of record of the entire interest. See 37 CFR 3.71. Statement under 37 CFR 3.73(b) is enclosed. (Form PTO/SB/96)

☐ attorney or agent of record. Registration number _____.

☐ attorney or agent acting under 37 CFR 1.34. Registration number if acting under 37 CFR 1.34. _____

/Alexander Soto/
Signature

Alexander Soto
Typed or printed name

858-527-2397
Telephone number

October 16, 2012
Date

NOTE: Signatures of all the inventors or assignees of record of the entire interest or their representative(s) are required. Submit multiple forms if more than one signature is required, see below*.

☐ *Total of _____ forms are submitted.

This collection of information is required by 37 CFR 41.31. The information is required to obtain or retain a benefit by the public which is to file (and by the USPTO to process) an application. Confidentiality is governed by 35 U.S.C. 122 and 37 CFR 1.11, 1.14 and 41.6. This collection is estimated to take 12 minutes to complete, including gathering, preparing, and submitting the completed application form to the USPTO. Time will vary depending upon the individual case. Any comments on the amount of time you require to complete this form and/or suggestions for reducing this burden, should be sent to the Chief Information Officer, U.S. Patent and Trademark Office, U.S. Department of Commerce, P.O. Box 1450, Alexandria, VA 22313-1450. DO NOT SEND FEES OR COMPLETED FORMS TO THIS ADDRESS. **SEND TO: Commissioner for Patents, P.O. Box 1450, Alexandria, VA 22313-1450.**

If you need assistance in completing the form, call 1-800-PTO-9199 and select option 2.

Privacy Act Statement

The **Privacy Act of 1974 (P.L. 93-579)** requires that you be given certain information in connection with your submission of the attached form related to a patent application or patent. Accordingly, pursuant to the requirements of the Act, please be advised that: (1) the general authority for the collection of this information is 35 U.S.C. 2(b)(2); (2) furnishing of the information solicited is voluntary; and (3) the principal purpose for which the information is used by the U.S. Patent and Trademark Office is to process and/or examine your submission related to a patent application or patent. If you do not furnish the requested information, the U.S. Patent and Trademark Office may not be able to process and/or examine your submission, which may result in termination of proceedings or abandonment of the application or expiration of the patent.

The information provided by you in this form will be subject to the following routine uses:

1. The information on this form will be treated confidentially to the extent allowed under the Freedom of Information Act (5 U.S.C. 552) and the Privacy Act (5 U.S.C 552a). Records from this system of records may be disclosed to the Department of Justice to determine whether disclosure of these records is required by the Freedom of Information Act.
2. A record from this system of records may be disclosed, as a routine use, in the course of presenting evidence to a court, magistrate, or administrative tribunal, including disclosures to opposing counsel in the course of settlement negotiations.
3. A record in this system of records may be disclosed, as a routine use, to a Member of Congress submitting a request involving an individual, to whom the record pertains, when the individual has requested assistance from the Member with respect to the subject matter of the record.
4. A record in this system of records may be disclosed, as a routine use, to a contractor of the Agency having need for the information in order to perform a contract. Recipients of information shall be required to comply with the requirements of the Privacy Act of 1974, as amended, pursuant to 5 U.S.C. 552a(m).
5. A record related to an International Application filed under the Patent Cooperation Treaty in this system of records may be disclosed, as a routine use, to the International Bureau of the World Intellectual Property Organization, pursuant to the Patent Cooperation Treaty.
6. A record in this system of records may be disclosed, as a routine use, to another federal agency for purposes of National Security review (35 U.S.C. 181) and for review pursuant to the Atomic Energy Act (42 U.S.C. 218(c)).
7. A record from this system of records may be disclosed, as a routine use, to the Administrator, General Services, or his/her designee, during an inspection of records conducted by GSA as part of that agency's responsibility to recommend improvements in records management practices and programs, under authority of 44 U.S.C. 2904 and 2906. Such disclosure shall be made in accordance with the GSA regulations governing inspection of records for this purpose, and any other relevant (*i.e.*, GSA or Commerce) directive. Such disclosure shall not be used to make determinations about individuals.
8. A record from this system of records may be disclosed, as a routine use, to the public after either publication of the application pursuant to 35 U.S.C. 122(b) or issuance of a patent pursuant to 35 U.S.C. 151. Further, a record may be disclosed, subject to the limitations of 37 CFR 1.14, as a routine use, to the public if the record was filed in an application which became abandoned or in which the proceedings were terminated and which application is referenced by either a published application, an application open to public inspection or an issued patent.
9. A record from this system of records may be disclosed, as a routine use, to a Federal, State, or local law enforcement agency, if the USPTO becomes aware of a violation or potential violation of law or regulation.

Electronic Patent Application Fee Transmittal

Application Number:	12512968
Filing Date:	30-Jul-2009
Title of Invention:	SYSTEM AND METHOD FOR PERFORMING HIGH-SPEED COMMUNICATIONS OVER FIBER OPTICAL NETWORKS
First Named Inventor/Applicant Name:	Alexander I. Soto
Filer:	Alexander Ivan Soto
Attorney Docket Number:	UBI-002C

Filed as Small Entity

Utility under 35 USC 111(a) Filing Fees

Description	Fee Code	Quantity	Amount	Sub-Total in USD($)
Basic Filing:				
Pages:				
Claims:				
Miscellaneous-Filing:				
Petition:				
Patent-Appeals-and-Interference:				
Notice of appeal	2401	1	315	315
Post-Allowance-and-Post-Issuance:				
Extension-of-Time:				

Description	Fee Code	Quantity	Amount	Sub-Total in USD($)
Miscellaneous:				
			Total in USD ($)	**315**

Electronic Acknowledgement Receipt

EFS ID:	14001728
Application Number:	12512968
International Application Number:	
Confirmation Number:	6685
Title of Invention:	SYSTEM AND METHOD FOR PERFORMING HIGH-SPEED COMMUNICATIONS OVER FIBER OPTICAL NETWORKS
First Named Inventor/Applicant Name:	Alexander I. Soto
Customer Number:	93749
Filer:	Alexander Ivan Soto
Filer Authorized By:	
Attorney Docket Number:	UBI-002C
Receipt Date:	16-OCT-2012
Filing Date:	30-JUL-2009
Time Stamp:	20:31:38
Application Type:	Utility under 35 USC 111(a)

Payment information:

Submitted with Payment	yes
Payment Type	Credit Card
Payment was successfully received in RAM	$315
RAM confirmation Number	6889
Deposit Account	
Authorized User	

File Listing:

Document Number	Document Description	File Name	File Size(Bytes)/ Message Digest	Multi Part /.zip	Pages (if appl.)

1	Notice of Appeal Filed	UBI-002C_Appeal_Notice.pdf	215996 745094ff648de34df763ac3d41562b8443d821e5	no	2
Warnings:					
Information:					
2	Fee Worksheet (SB06)	fee-info.pdf	30402 f9867913292c259e33181deb91d2dbbe44bd795c	no	2
Warnings:					
Information:					
			Total Files Size (in bytes):	246398	

This Acknowledgement Receipt evidences receipt on the noted date by the USPTO of the indicated documents, characterized by the applicant, and including page counts, where applicable. It serves as evidence of receipt similar to a Post Card, as described in MPEP 503.

<u>New Applications Under 35 U.S.C. 111</u>
If a new application is being filed and the application includes the necessary components for a filing date (see 37 CFR 1.53(b)-(d) and MPEP 506), a Filing Receipt (37 CFR 1.54) will be issued in due course and the date shown on this Acknowledgement Receipt will establish the filing date of the application.

<u>National Stage of an International Application under 35 U.S.C. 371</u>
If a timely submission to enter the national stage of an international application is compliant with the conditions of 35 U.S.C. 371 and other applicable requirements a Form PCT/DO/EO/903 indicating acceptance of the application as a national stage submission under 35 U.S.C. 371 will be issued in addition to the Filing Receipt, in due course.

<u>New International Application Filed with the USPTO as a Receiving Office</u>
If a new international application is being filed and the international application includes the necessary components for an international filing date (see PCT Article 11 and MPEP 1810), a Notification of the International Application Number and of the International Filing Date (Form PCT/RO/105) will be issued in due course, subject to prescriptions concerning national security, and the date shown on this Acknowledgement Receipt will establish the international filing date of the application.

UNITED STATES PATENT AND TRADEMARK OFFICE

UNITED STATES DEPARTMENT OF COMMERCE
United States Patent and Trademark Office
Address: COMMISSIONER FOR PATENTS
P.O. Box 1450
Alexandria, Virginia 22313-1450
www.uspto.gov

APPLICATION NO.	FILING DATE	FIRST NAMED INVENTOR	ATTORNEY DOCKET NO.	CONFIRMATION NO.
12/512,968	07/30/2009	Alexander I. Soto	UBI-002C	6685

93749 7590 07/17/2012
Alexander Soto
7673 Hazard Center Dr.
San Diego, CA 92108

EXAMINER
BELLO, AGUSTIN

ART UNIT	PAPER NUMBER
2613	

NOTIFICATION DATE	DELIVERY MODE
07/17/2012	ELECTRONIC

Please find below and/or attached an Office communication concerning this application or proceeding.

The time period for reply, if any, is set in the attached communication.

Notice of the Office communication was sent electronically on above-indicated "Notification Date" to the following e-mail address(es):

alex@iponsystems.com

PTOL-90A (Rev. 04/07)

Office Action Summary	Application No.	Applicant(s)	
	12/512,968	SOTO ET AL.	
	Examiner	Art Unit	
	AGUSTIN BELLO	2613	

-- The MAILING DATE of this communication appears on the cover sheet with the correspondence address --

Period for Reply

A SHORTENED STATUTORY PERIOD FOR REPLY IS SET TO EXPIRE 3 MONTH(S) OR THIRTY (30) DAYS, WHICHEVER IS LONGER, FROM THE MAILING DATE OF THIS COMMUNICATION.

- Extensions of time may be available under the provisions of 37 CFR 1.136(a). In no event, however, may a reply be timely filed after SIX (6) MONTHS from the mailing date of this communication.
- If NO period for reply is specified above, the maximum statutory period will apply and will expire SIX (6) MONTHS from the mailing date of this communication.
- Failure to reply within the set or extended period for reply will, by statute, cause the application to become ABANDONED (35 U.S.C. § 133). Any reply received by the Office later than three months after the mailing date of this communication, even if timely filed, may reduce any earned patent term adjustment. See 37 CFR 1.704(b).

Status

1)☒ Responsive to communication(s) filed on *16 May 2012*.

2a)☒ This action is **FINAL**. 2b)☐ This action is non-final.

3)☐ An election was made by the applicant in response to a restriction requirement set forth during the interview on _____; the restriction requirement and election have been incorporated into this action.

4)☐ Since this application is in condition for allowance except for formal matters, prosecution as to the merits is closed in accordance with the practice under *Ex parte Quayle*, 1935 C.D. 11, 453 O.G. 213.

Disposition of Claims

5)☒ Claim(s) *1-21* is/are pending in the application.

5a) Of the above claim(s) _____ is/are withdrawn from consideration.

6)☐ Claim(s) _____ is/are allowed.

7)☒ Claim(s) *1-21* is/are rejected.

8)☐ Claim(s) _____ is/are objected to.

9)☐ Claim(s) _____ are subject to restriction and/or election requirement.

Application Papers

10)☐ The specification is objected to by the Examiner.

11)☒ The drawing(s) filed on *30 July 2009* is/are: a)☒ accepted or b)☐ objected to by the Examiner.

Applicant may not request that any objection to the drawing(s) be held in abeyance. See 37 CFR 1.85(a).

Replacement drawing sheet(s) including the correction is required if the drawing(s) is objected to. See 37 CFR 1.121(d).

12)☐ The oath or declaration is objected to by the Examiner. Note the attached Office Action or form PTO-152.

Priority under 35 U.S.C. § 119

13)☐ Acknowledgment is made of a claim for foreign priority under 35 U.S.C. § 119(a)-(d) or (f).

a)☐ All b)☐ Some * c)☐ None of:

1.☐ Certified copies of the priority documents have been received.

2.☐ Certified copies of the priority documents have been received in Application No. _____.

3.☐ Copies of the certified copies of the priority documents have been received in this National Stage application from the International Bureau (PCT Rule 17.2(a)).

* See the attached detailed Office action for a list of the certified copies not received.

Attachment(s)

1) ☒ Notice of References Cited (PTO-892)
2) ☐ Notice of Draftsperson's Patent Drawing Review (PTO-948)
3) ☐ Information Disclosure Statement(s) (PTO/SB/08) Paper No(s)/Mail Date _____.
4) ☐ Interview Summary (PTO-413) Paper No(s)/Mail Date. _____ .
5) ☐ Notice of Informal Patent Application
6) ☐ Other: _____.

DETAILED ACTION

Claim Rejections - 35 USC § 102

1. The following is a quotation of the appropriate paragraphs of 35 U.S.C. 102 that form the basis for the rejections under this section made in this Office action:

> A person shall be entitled to a patent unless –
>
> (e) the invention was described in (1) an application for patent, published under section 122(b), by another filed in the United States before the invention by the applicant for patent or (2) a patent granted on an application for patent by another filed in the United States before the invention by the applicant for patent, except that an international application filed under the treaty defined in section 351(a) shall have the effects for purposes of this subsection of an application filed in the United States only if the international application designated the United States and was published under Article 21(2) of such treaty in the English language.

2. Claims 1, 3-10, 12-18, and 20-21 are rejected under 35 U.S.C. 102(e) as being anticipated by Brede (Patent No. US 6,603,822 B2).

Regarding claim 1, 10, 18, Brede teaches an optical transceiver module (Figure 3) for an Optical Line Terminal (i.e. "central office" and/or "head end" throughout) of the optical transceiver module capable of transmitting continuous mode optical data signals on a first wavelength according to an m-ary modulation format and to equalize an optical data channel responsive to a received burst mode optical data signal on a second wavelength over a fiber optic cable, the optical transceiver module comprising: a system interface (i.e. "Network Interface" of Figure 3) for electrically coupling the optical transceiver module to the OLT (i.e. "central office" and/or "head end" throughout) and for communicating electrical binary data signals between the optical transceiver module and the OLT; a modulator (reference numeral 82 in Figure 3) electrically coupled to the system interface and configured to receive a first electrical

binary data signal and to generate according to an m-ary modulation method a first electrical m-ary modulation signal representative of the data in the first electrical binary data signal; a driver (reference numeral 25 in Figure 4; reference numeral 82 in Figure 3; reference numeral 148 in Figure 21; reference numeral 246 in Figure 37) electrically coupled to the modulator configured to amplify the first electrical m-ary modulation signal in order to drive an optical transmitter of the optical transceiver module; an optical transmitter (reference numeral 14 in Figure 3; reference numeral 501 in Figure 4) electrically coupled to the driver configured to emit the optical continuous mode signal on the first wavelength on the fiber optic cable responsive to and representative of the amplified first electrical m-ary modulation signal; an optical detector (reference numeral 16 in Figure 3; reference numeral 502 in Figure 4) configured to receive the burst mode optical data signal on the second wavelength from the fiber optic cable and generate a second electrical signal representative of the burst mode optical data signal; an amplifier (reference numeral 82 in Figure 3; reference numeral 154 in Figure 22; reference numeral 234 in Figure 37) electrically coupled to the optical detector and configured to amplify the second electrical signal to facilitate clock and data recovery of the second electrical signal; a clock data recovery and equalization unit (reference numeral 54 in Figure 2; reference numeral 168, 172 in Figure 22; reference numeral 214, 222 in Figure 26; Figure 35) electrically coupled to the amplifier and configured to equalize a burst mode channel, recover clock data timing and to generate a second electrical m-ary modulation signal; and a de-modulator (reference numeral 174, 176 in

Figure 22; reference numeral 216 in Figure 26; reference numeral 366 in Figure 35) electrically coupled to the system interface and electrically coupled to the clock data recovery and equalization unit and configured to generate a second binary data signal representative of the data in the second electrical m-ary modulation signal, whereby the optical transceiver module converts electrical binary data communications from the OLT to optical m-ary data communications for communications over the fiber optical cable.

Regarding claim 3, 12, 20, Brede teaches the optical transceiver module of claim 1, wherein the m-ary modulation method is selected from the group essentially consisting of: quadrature amplitude modulation (QAM); QAM-32 (column 6 lines 5-18); QAM-256; quadrature phase shift keying (QPSK); differential QPSK; return-to-zero QPSK; dual-polarized QPSK; orthogonal frequency division multiplexing (OFDM) (column 3 lines 11-21; column 11 lines 1-8; column 19 lines 34-67); pulse amplitude modulation (PAM); PAM-5; and PAM- 17.

Regarding claim 4, 13, Brede teaches the optical transceiver module of claim 1, wherein equalizing routine to equalize the burst mode channel employed by the clock data recovery and equalization unit is selected from the group consisting of: a blind equalization routine which does not use a known training sequence and decision-directed equalization routine using a known training sequence (column 8 lines 59 – column 9 line 9; column 54 lines 57-67; column 104 lines 21-45).

Regarding claim 5, 14, Brede teaches the optical transceiver module of claim 4, wherein the known training sequence of a decision-directed equalization routine is multiplexed in a frame of the received burst mode optical signal (column 8 lines 59 – column 9 line 9; column 54 lines 57-67; column 104 lines 21-45).

Regarding claim 6, 21, Brede teaches the optical transceiver module of claim 1, further comprising: means for storing a first set of determined settings which improve processing of received burst mode data from a first client on the passive optical network associated with a first optical channel; means for loading a predetermined second set of settings which improve prove processing of received burst mode data from a second client on the passive optical network associated with a second optical channel prior to processing received burst mode data from the second client (column 67 lines 5-11).

Regarding claim 7, 15, Brede teaches the optical transceiver module of claim 1, further comprising: an encoder (reference numeral 147 in Figure 21; reference numeral 248, 250 in Figure 37) electrically coupled to the system interface and coupled electrically to the input of the modulator and configured to encode the first electrical binary data signal as input to the modulator with a method designed to improve the energy per bit required to deliver the data transmitted by the optical transceiver module; and a decoder (Figure 26; Figure 34; reference numeral 228, 230, 240, 242 in Figure 37) electrically coupled to the system interface and coupled electrically to the

output of the demodulator and configured to decode the second electrical binary data signal and correct for errors.

Regarding claim 8, 16, Brede teaches the optical transceiver module of claim 7, wherein the encoder or decoder method is selected from the group essentially consisting of: Reed-Solomon coding; trellis coding; Low-density parity-check coding, and Turbo coding (column 5 lines 42-52; column 31 lines 33-55; column 33 lines 1-4).

Regarding claim 9, 17, Brede teaches the optical transceiver module of claim 1, wherein the optical transceiver module and OLT are part of passive optical network (Figure 1 and Figure 2) and the passive optical network is a coarse wavelength-division multiplexing (CWDM) or dense wavelength-division multiplexing (DWDM) passive optical network and an M number of wavelengths are transmitted and an N number of wavelengths are received over the fiber optic cable, the optical transceiver module further comprising: an M number of modulators (reference numeral 82 in Figure 3) coupled respectively to an M number of drivers (reference numeral 25 in Figure 4) coupled respectively to an M number of optical transmitters (reference numeral 501 in Figure 4) such that a respective M number of optical m-ary modulated signals are transmitted over the fiber optic cable (reference numeral 24 in Figure 4); and an N number of optical detectors (reference numeral 502 in Figure 4) coupled respectively to an N number of amplifiers (reference numeral 82 in Figure 3; reference numeral 154 in Figure 22; reference numeral 234 in Figure 37) coupled respectively to an N number of clock and data recovery units (reference numeral 54 in Figure 2; reference numeral

168, 172 in Figure 22; reference numeral 214, 222 in Figure 26; Figure 35) coupled respectively to an N number of equalizers coupled (reference numeral 54 in Figure 2; reference numeral 168, 172 in Figure 22; reference numeral 214, 222 in Figure 26; Figure 35) to an N number of demodulators (reference numeral 82 in Figure 3) such that a respective N number of binary modulated electrical signals are generated responsive to an N number of received optical data signals received over the fiber optic cable.

Claim Rejections - 35 USC § 103

3. The following is a quotation of 35 U.S.C. 103(a) which forms the basis for all obviousness rejections set forth in this Office action:

> (a) A patent may not be obtained though the invention is not identically disclosed or described as set forth in section 102 of this title, if the differences between the subject matter sought to be patented and the prior art are such that the subject matter as a whole would have been obvious at the time the invention was made to a person having ordinary skill in the art to which said subject matter pertains. Patentability shall not be negatived by the manner in which the invention was made.

4. Claims 2, 11, and 19 are rejected under 35 U.S.C. 103(a) as being unpatentable over Brede in view of Aronson (Patent Application Publication No. US 2007/0031153 A1).

Regarding claim 2, 11, 19, Brede teaches the optical transceiver module of claim 1, but fails to specifically teach that the form factor of the optical transceiver module is selected from the group consisting essentially of: SFP; SFP+; XFP; X2; XENPAK; XPA; and 300 pin transceiver form factors. However, as evidenced by Aronson, these types of form factors are well known in the art (paragraph [0005], [0011], [0045]). One skilled in the art would have been motivated to utilize any of the claimed form factors in

order to meet design requirements, budgetary requirements, or performance requirements such as achieving 10 Gb/s (paragraph [0005], [0011], [0045]). Therefore, it would have been obvious to one skilled in the art at the time the invention was made to utilize a XFP form factor in Brede as taught by Aronson.

Response to Arguments

5. Applicant's arguments filed 05/16/12 have been fully considered but they are not persuasive. Applicant argues that the newly added limitations patentably distinguish the claimed invention from the cited prior art. However, as noted in the amended office action, examiner maintains that Brede continues to anticipate the claimed invention.

Specifically, examiner maintains that Brede teaches the claimed transceiver module via disclosure and written description of Figure 3 and the detailed description of the elements that make up the transceiver of Figure 3. Brede further discloses that the transceiver of Figure 3 is connected via an electrical interface, i.e. "Network Interface" of Figure 3, to a "central office" and/or a "head-end" as described throughout. Furthermore, Brede makes it clear that the HDT, which examiner equates to applicant's transceiver, is a part of and resides in the "central office," which examiner equates to applicant's OLT. As such, it is clear that Brede's HDT/transceiver meets applicant's limitations to a OLT with a transceiver.

As to applicant's argument that the distance from optical and electrical conversion elements somehow teaches away from the claimed invention is irrelevant since applicant fails to recite any limitation that precludes any such distance.

Regardless of distance, examiner maintains that Brede clearly teaches a transceiver as claimed. Furthermore, in response to applicant's argument that the examiner's conclusion of obviousness is based upon improper hindsight reasoning, it must be recognized that any judgment on obviousness is in a sense necessarily a reconstruction based upon hindsight reasoning. But so long as it takes into account only knowledge which was within the level of ordinary skill at the time the claimed invention was made, and does not include knowledge gleaned only from the applicant's disclosure, such a reconstruction is proper. See *In re McLaughlin*, 443 F.2d 1392, 170 USPQ 209 (CCPA 1971). Moreover, at no time does examiner rely on inherency to meet the limitations of the claimed invention. Rather, examiner relies on that explicitly disclosed by Brede, i.e. on optical transceiver in an OLT, to meet applicant's limitations.

Conclusion

6. **THIS ACTION IS MADE FINAL.** Applicant is reminded of the extension of time policy as set forth in 37 CFR 1.136(a).

A shortened statutory period for reply to this final action is set to expire THREE MONTHS from the mailing date of this action. In the event a first reply is filed within TWO MONTHS of the mailing date of this final action and the advisory action is not mailed until after the end of the THREE-MONTH shortened statutory period, then the shortened statutory period will expire on the date the advisory action is mailed, and any extension fee pursuant to 37 CFR 1.136(a) will be calculated from the mailing date of

the advisory action. In no event, however, will the statutory period for reply expire later than SIX MONTHS from the mailing date of this final action.

Any inquiry concerning this communication or earlier communications from the examiner should be directed to AGUSTIN BELLO whose telephone number is (571)272-3026. The examiner can normally be reached on M-F 8:30-6:00.

If attempts to reach the examiner by telephone are unsuccessful, the examiner's supervisor, Kenneth Vanderpuye can be reached on (571)272-3078. The fax phone number for the organization where this application or proceeding is assigned is 571-273-8300.

Information regarding the status of an application may be obtained from the Patent Application Information Retrieval (PAIR) system. Status information for published applications may be obtained from either Private PAIR or Public PAIR. Status information for unpublished applications is available through Private PAIR only. For more information about the PAIR system, see http://pair-direct.uspto.gov. Should you have questions on access to the Private PAIR system, contact the Electronic Business Center (EBC) at 866-217-9197 (toll-free). If you would like assistance from a USPTO Customer Service Representative or access to the automated information system, call 800-786-9199 (IN USA OR CANADA) or 571-272-1000.

/Agustin Bello/
Primary Examiner, Art Unit 2613

Notice of References Cited	Application/Control No. 12/512,968	Applicant(s)/Patent Under Reexamination SOTO ET AL.	
	Examiner AGUSTIN BELLO	Art Unit 2613	Page 1 of 1

U.S. PATENT DOCUMENTS

*		Document Number Country Code-Number-Kind Code	Date MM-YYYY	Name	Classification
*	A	US-6,603,822 B2	08-2003	Brede et al.	375/340
*	B	US-2004/0028408 A1	02-2004	Cox et al.	398/66
*	C	US-2007/0031153 A1	02-2007	Aronson et al.	398/138
*	D	US-7,242,868 B2	07-2007	Soto et al.	398/72
*	E	US-7,317,769 B2	01-2008	Tonietto et al.	375/340
*	F	US-7,321,612 B2	01-2008	Tonietto et al.	375/219
*	G	US-7,486,894 B2	02-2009	Aronson et al.	398/135
*	H	US-2010/0158530 A1	06-2010	Soto et al.	398/79
*	I	US-7,729,617 B2	06-2010	Sheth et al.	398/135
*	J	US-2011/0135312 A1	06-2011	EL-AHMADI et al.	398/135
	K	US-			
	L	US-			
	M	US-			

FOREIGN PATENT DOCUMENTS

*		Document Number Country Code-Number-Kind Code	Date MM-YYYY	Country	Name	Classification
	N					
	O					
	P					
	Q					
	R					
	S					
	T					

NON-PATENT DOCUMENTS

*		Include as applicable: Author, Title Date, Publisher, Edition or Volume, Pertinent Pages)
	U	
	V	
	W	
	X	

*A copy of this reference is not being furnished with this Office action. (See MPEP § 707.05(a).)
Dates in MM-YYYY format are publication dates. Classifications may be US or foreign.

Index of Claims	Application/Control No.	Applicant(s)/Patent Under Reexamination
	12512968	SOTO ET AL.
	Examiner	**Art Unit**
	AGUSTIN BELLO	2613

✓	Rejected	-	Cancelled	N	Non-Elected	A	Appeal
=	Allowed	÷	Restricted	I	Interference	O	Objected

☐ Claims renumbered in the same order as presented by applicant ☐ CPA ☐ T.D. ☐ R.1.47

CLAIM		DATE								
Final	Original	02/12/2012	07/11/2012							
	1	✓	✓							
	2	✓	✓							
	3	✓	✓							
	4	✓	✓							
	5	✓	✓							
	6	✓	✓							
	7	✓	✓							
	8	✓	✓							
	9	✓	✓							
	10	✓	✓							
	11	✓	✓							
	12	✓	✓							
	13	✓	✓							
	14	✓	✓							
	15	✓	✓							
	16	✓	✓							
	17	✓	✓							
	18	✓	✓							
	19	✓	✓							
	20	✓	✓							
	21	✓	✓							

Search Notes	Application/Control No.	Applicant(s)/Patent Under Reexamination
	12512968	SOTO ET AL.
	Examiner	**Art Unit**
	AGUSTIN BELLO	2613

SEARCHED			
Class	**Subclass**	**Date**	**Examiner**
398	66-73	02/11/12	ab

SEARCH NOTES		
Search Notes	**Date**	**Examiner**

INTERFERENCE SEARCH			
Class	**Subclass**	**Date**	**Examiner**

PATENTS **Docket No. UBI-02C**	
IN THE UNITED STATES PATENT AND TRADEMARK OFFICE	
In re Application of: **Alexander I. Soto et al.**	Group Art Unit: **2613**
Patent Application No.: **12/512,968**	
Filed on: **July 30, 2009**	
For: **SYSTEM AND METHOD FOR PERFORMING HIGH-SPEED COMMUNICATIONS OVER FIBER OPTICAL NETWORKS**	Examiner: Bello, Agustin

Commissioner for Patents
Mail Stop Amendment
PO Box 1450
Alexandria, VA 22313-4150

RESPONSE PER 37 C.F.R. §1.111

Responsive to the Office Action mailed on Feb. 16, 2012, please enter the following Amendment and Response in the above-entitled Patent Application.

AMENDMENTS TO THE CLAIMS

Kindly enter the claim amendments as set forth in the following claim listing presented in accordance with 37 C.F.R. §1.121(c)(1):

Complete Listing of Claims:

1.) (Currently amended) An optical transceiver module for~~of~~ an Optical Line Terminal (OLT)~~ in a passive optical network for~~; the optical transceiver module capable of transmitting continuous mode optical data signals on a first wavelength according to an m-ary modulation format and to equalize an optical data channel responsive to a received burst mode optical data signal on a second wavelength over a fiber optic cable, the optical transceiver module ~~further~~ comprising:

~~a modulator configured to generate according to an m-ary modulation method a first m-ary modulation signal representative of a first binary data signal input to the optical transceiver module;~~

a system interface for electrically coupling the optical transceiver module to the OLT and for communicating electrical binary data signals between the optical transceiver module and the OLT;

a modulator electrically coupled to the system interface and configured to receive a first electrical binary data signal and to generate according to an m-ary modulation method a first electrical m-ary modulation signal representative of the data in the first electrical binary data signal;

a driver electrically coupled to the modulator configured to amplify the first electrical m-ary modulation signal in order to drive an optical transmitter of the optical transceiver module;

an optical transmitter electrically coupled to the driver configured to emit the optical continuous mode signal on the first wavelength on the fiber optic cable responsive to and representative of the amplified first electrical m-ary modulation signal;

an optical detector configured to receive the burst mode optical data signal on the second wavelength from the fiber optic cable and generate a ~~representative~~ second electrical signal representative of the burst mode optical data signal;

an amplifier electrically coupled to the optical detector and configured to amplify the second electrical signal to facilitate clock and data recovery of the second electrical signal;

a clock data recovery and equalization unit electrically coupled to the amplifier and configured to equalize a burst mode channel, recover clock data timing and to generate a second electrical m-ary modulation signal; and

a de-modulator electrically coupled to the system interface and electrically coupled to the clock data recovery and equalization unit and configured to generate a second electrical binary data ~~output~~ signal representative of the data in the second electrical m-ary modulation signal~~.~~; whereby

the optical transceiver module converts electrical binary data communications from the OLT to optical m-ary data communications for communications over the fiber optical cable.

2.) (Original) The optical transceiver module of claim 1, wherein the form factor of the optical transceiver module is selected from the group consisting essentially of: SFP; SFP+; XFP; X2; XENPAK; XPA; and 300 pin transceiver form factors.

3.) (Original) The optical transceiver module of claim 1, wherein the m-ary modulation method is selected from the group essentially consisting of:

quadrature amplitude modulation (QAM);
QAM-32;
QAM-256;
quadrature phase shift keying (QPSK);
differential QPSK;
return-to-zero QPSK;
dual-polarized QPSK;
orthogonal frequency division multiplexing (OFDM);
pulse amplitude modulation (PAM);
PAM-5; and
PAM-17;

4.) (Currently amended) The optical transceiver module of claim 1, wherein equalizing routine to equalize the burst mode channel employed by the clock data recovery and equalization unit ~~equalizer~~ is selected from the group consisting of: a blind equalization routine which does not use a known training sequence and decision-directed equalization routine using a known training sequence.

5.) (Currently amended) The optical transceiver module of claim 4, wherein the known training sequence of a decision-directed equalization routine is multiplexed in a frame of the received burst mode optical data signal.

6.) (Currently amended) The optical transceiver module of claim 1, further comprising:

means for storing a first set of determined settings which improve processing of received burst mode data from a first client on ~~the~~a passive optical network associated with a first optical channel;

means for loading a predetermined second set of settings which improve prove processing of received burst mode data from a second client on the passive optical network associated with a second optical channel prior to processing received burst mode data from the second client.

7.) (Currently amended) The optical transceiver module of claim 1, further comprising:

an encoder electrically coupled to the system interface and coupled electrically to the input of the modulator and configured to encode the first electrical binary data signal ~~input~~ as input to the modulator with a method designed to improve the energy per bit required to deliver the data transmitted by the optical transceiver module; and

a decoder electrically coupled to the system interface and coupled electrically to the output of the demodulator and configured to decode the second electrical binary data ~~output~~ signal and correct for errors.

8.) (Original) The optical transceiver module of claim 7, wherein the encoder or decoder method is selected from the group essentially consisting of: Reed-Solomon coding; trellis coding; Low-density parity-check coding, and Turbo coding.

9.) (Currently amended) The optical transceiver module of claim 1, wherein the optical transceiver module and OLT are part of a passive optical network and the passive optical network is a coarse wavelength-division multiplexing (CWDM) or dense wavelength-division multiplexing (DWDM) passive optical network and an M number of wavelengths are transmitted and an N number of wavelengths are received over the fiber optic cable, the optical transceiver module further comprising:

an M number of modulators coupled respectively to an M number of drivers coupled respectively to an M number of optical transmitters such that a respective M number of optical m-ary modulated signals are transmitted over the fiber optic cable; and

an N number of optical detectors coupled respectively to an N number of amplifiers coupled respectively to an N number of clock and data recovery units coupled respectively to an N number of equalizers coupled to an N number of de-modulators such that a respective N number of binary modulated electrical signals are generated responsive to an N number of received optical data signals received over the fiber optic cable.

10.) (Currently amended) An optical transceiver module for~~of~~ an Optical Network Unit (ONU) or Optical Network Terminal (ONT) ~~in a passive optical network for~~; the optical transceiver module capable of transmitting burst mode optical data signals on a first wavelength according to an m-ary modulation format and to equalize an optical data channel responsive to a received continuous mode optical data signal on a second wavelength over a fiber optic cable, the optical transceiver module ~~further~~ comprising:

~~a modulator configured to generate according to an m-ary modulation method a first m-ary modulation signal representative of a first binary data signal input to the optical transceiver module;~~

a system interface for electrically coupling the optical transceiver module to the ONU or ONT and for communicating electrical binary data signals between the optical transceiver module and the ONU or ONT;

a modulator electrically coupled to the system interface and configured to receive a first electrical binary data signal and to generate according to an m-ary

modulation method a first electrical m-ary modulation signal representative of the data in the first electrical binary data signal;

a driver electrically coupled to the modulator configured to amplify the first m-ary modulation signal in order to drive an optical transmitter of the optical transceiver module;

an optical transmitter electrically coupled to the driver configured to emit the burst mode optical signal on the first wavelength on the fiber optic cable responsive to and representative of the amplified first electrical m-ary modulation signal;

an optical detector configured to receive the continuous mode optical data signal on the second wavelength from the fiber optic cable and generate a representative second electrical signal representative of the continuous mode data signal;

an amplifier electrically coupled to the optical detector and configured to amplify the second electrical signal to facilitate clock and data recovery of the second electrical signal;

a clock data recovery and equalization unit electrically coupled to the amplifier and configured to equalize a continuous mode channel, recover clock data timing and to generate a second electrical m-ary modulation signal; and

a de-modulator electrically coupled to the system interface and electrically coupled to the clock data recovery and equalization unit and configured to generate a second electrical binary data ~~output~~ signal representative of the data in the second electrical m-ary modulation signal~~.~~; whereby

the optical transceiver module converts electrical binary data communications from the ONU or ONT to optical m-ary data communications for communications over the fiber optical cable.

11.) (Original) The optical transceiver module of claim 10, wherein the form factor of the optical transceiver module is selected from the group consisting essentially of: SFP; SFP+; XFP; X2; XENPAK; XPA; and 300 pin transceiver form factors.

12.) (Original) The optical transceiver module of claim 10, wherein the m-ary modulation method is selected from the group essentially consisting of:

quadrature amplitude modulation (QAM);
QAM-32;
QAM-256;
quadrature phase shift keying (QPSK);
differential QPSK;
return-to-zero QPSK;
dual-polarized QPSK;
orthogonal frequency division multiplexing (OFDM);
pulse amplitude modulation (PAM);
PAM-5; and
PAM-17.

13.) (Currently amended) The optical transceiver module of claim 10, wherein equalizing routine to equalize the continuous mode channel employed by the clock data recovery and equalization unit ~~equalizer~~ is selected from the group consisting of: a blind equalization routine which does not use a known training sequence and decision-directed equalization routine using a known training sequence.

14.) (Currently amended) The optical transceiver module of claim 13, wherein the known training sequence of a decision-directed equalization routine is multiplexed in a frame of the received continuous mode optical data signal.

15.) (Currently amended) The optical transceiver module of claim 13, further comprising:

an encoder electrically coupled to the system interface and coupled electrically to the input of the modulator and configured to encode the first electrical binary data signal ~~input~~ as input to the modulator with a method designed to improve the energy per bit required to deliver the data transmitted by the optical transceiver module; and

a decoder electrically coupled to the sysetm interface and coupled electrically to the output of the demodulator and configured to decode the second electrical binary data ~~output~~ signal and correct for errors.

16.) (Original) The optical transceiver module of claim 15, wherein the encoder or decoder method is selected from the group essentially consisting of: Reed-Solomon coding; trellis coding; Low-density parity-check coding, and Turbo coding.

17.) (Currently amended) The optical transceiver module of claim 10, wherein the optical transceiver module and ONU or ONT are part of a passive optical network and the passive optical network is a coarse wavelength-division multiplexing (CWDM) or dense wavelength division multiplexing (DWDM) passive optical network and an M number of wavelengths are transmitted and an N number of wavelengths are received over the fiber optic cable, the optical transceiver module further comprising:

an M number of modulators coupled respectively to an M number of drivers coupled respectively to an M number of optical transmitters such that a respective M number of optical m-ary modulated signals are transmitted over the fiber optic cable; and

an N number of optical detectors coupled respectively to an N number of amplifiers coupled respectively to an N number of clock and data recovery units coupled respectively to an N number of equalizers coupled to an N number of de-modulators such that a respective N number of binary modulated electrical signals are generated responsive to an N number of received optical data signals received over the fiber optic cable.

18.) (Currently amended) In a passive optical network having an Optical Line Terminal (OLT), or an Optical Network Unit (ONU) or an Optical Network Terminal (ONT) with an optical transceiver module having an optical transmitter for transmitting communications on a first wavelength and an optical detector for receiving communications on a second wavelength, a method for m-ary modulation

communication across the passive optical network generated from within the optical transceiver module comprising the steps of:

~~(a) modulating a first binary signal input to the optical transceiver module according to an m-ary modulation method to produce a first m-ary modulation signal;~~

(a) receiving a first electrical binary data signal from the OLT, ONU or ONT through a system interface of the optical transceiver module wherein the optical transceiver module is electrically coupled to the OLT, ONU or ONT;

(b) converting the first electrical binary data signal in the optical transceiver module according to an m-ary modulation method to produce a first electrical m-ary modulation signal;

(c)~~(d)~~ amplifying the first electrical m-ary modulation signal to drive the optical transmitter of the optical transceiver module;

(d)~~(e)~~ emitting a~~n~~ first optical signal on the first wavelength responsive to and representative of the amplified first electrical m-ary modulation signal from the optical transmitter of the optical transceiver module into an optical fiber;

(e)~~(f)~~ receiving a~~n~~ second optical signal on the second wavelength from the optical fiber and producing an electrical signal from the optical detector of the optical transceiver module;

(f)~~(g)~~ amplifying the electrical signal to facilitate clock and data recovery in the optical transceiver module;

(g) equalizing the amplified electrical signal and recovering clock data information to produce a second m-ary modulation signal in the optical transceiver module; ~~and~~

(h) demodulating the second m-ary modulation signal according to an m-ary modulation method to produce a second electrical binary ~~output~~ signal~~.~~; and

(i) transmitting the second electrical binary signal to the OLT, ONU or ONT through the system interface of the optical transceiver module; whereby

the optical transceiver module communicates with the OLT, ONU or ONT using binary signals and communicates optically over the passive optical network using the m-ary modulation method.

~~whereby m-ary modulation communication is performed within the optical transceiver module of an OLT, ONU or an ONT of a passive optical network.~~

19.) (Original) The method of claim 18, whereby the form factor of the optical transceiver module is selected from the group consisting essentially of: SFP; SFP+; XFP; X2; XENPAK; XPA; and 300 pin transceiver form factors.

20.) (Original) The method of claim 18, whereby the m-ary modulation method is selected from the group consisting essentially of:

quadrature amplitude modulation (QAM);
QAM-32;
QAM-256;
quadrature phase shift keying (QPSK);
differential QPSK;
return-to-zero QPSK;
dual-polarized QPSK;
orthogonal frequency division multiplexing (OFDM);
pulse amplitude modulation (PAM);
PAM-5; and
PAM-17.

21.) (Currently amended) The method of claim 18, further comprising the steps of:

(j)~~(h)~~ storing at the OLT a first set of determined settings which improve processing of received burst mode data from a first ONU or ONT on the passive optical network associated with a first optical channel; and

(k)~~(i)~~ loading at the OLT a predetermined second set of settings which improve processing of received burst mode data from a second ONU or ONT on the passive optical network associated with a second optical channel prior to processing received burst mode data from the second ONU or ONT.

REMARKS

Introduction: In an abundance of care, Applicants herewith amend claims 1, 4-7, 9-10, 13-15, 17-18 and 21 to better and more specifically recite that which Applicants consider to be the invention. Applicants respectfully request reconsideration and withdrawal of the rejections to claims 1-21, as amended and in consideration of Applicants' following remarks.

Discussion regarding claims 1, 3-10, 12-18, and 20-21: In the Office Action mailed on Feb. 16, 2012, the Office rejects claims 1, 3-10, 12-18, and 20-21 as being anticipated under 35 U.S.C. §102(e) by U.S. Pat. No. 6,603,822 filed by Brede et al ("Brede"). Applicants respectfully traverse these rejections which fail to state a proper *prima facie* case for anticipation at least because the Office has not met its burden to fully develop reasons supporting its reliance on the doctrine of inherency.

Regarding rejections to base claims 1, 10, and 18, the Office bases its rejections on Fig. 3 of Brede arguing that Fig. 3 teaches an optical transceiver module. However, the Office Action does not cite any specific reference in Brede to support this characteristic of Fig. 3 and is thus arguing that the characterization of Fig. 3 as an optical transceiver module is an inherent characteristic to Fig. 3. Applicants' respectfully disagree with this characterization as again there is no explicit reference found in Brede that teaches or supports this characterization, on the contrary, Brede teaches away from such a characterization. The optical and electrical conversion in Fig. 3 happens in element 14 and 16 (more specifically elements 501 and 502 in Fig. 4 which further describes elements 14 and 16 of Fig. 3) yet the bulk of the functionality relied upon in the Office Action to reject base claims 1, 10 and 18 are in element 12 of Fig. 3 (for example, element 82 in Fig. 3 is used to reject the modulator, driver and amplifier elements of base claims 1, 10 and 18). Element 12 of Fig. 3 is the main element of Fig. 3 and arguably the primary purpose of Fig. 3 is the introduction and illustration of element 12 which is described in Brede as a host digital terminal (HDT). An HDT can be described as an Optical Line Terminal (OLT) however an OLT cannot be conflated with the optical transceiver module. Furthermore, Brede describes the HDT, Fig. 3 element 12, as being

up to 100ft away from the optical and electrical conversion elements 14 and 16 (Brede col. 25, lines 7-9). Thus a plain reading of Brede would teach away from the characteristic of Fig. 3, as a whole, as an optical transceiver module to someone skill in the arts.

At best, it is the opinion of the Applicants, that the Office is relying upon the possibility that someone skilled in the arts could view, as a whole, Fig. 3 as an optical transceiver module. While Applicants' suggest that such a possibility is not probable without the application of some measure of hindsight, the mere possibility of an inherent characteristic in a prior art reference is not sufficient to establish inherency.

Inherency cannot be established by mere possibilities or even probabilities. The fact that a certain result or characteristic may occur or may be present in cited art is not sufficient to establish the inherency of that result or characteristic. (MPEP 2112 (IV)), citing In re Rijckaert, 9 F.3d 1531, 1534, 28 USPQ2d 1955, 1957 (Fed. Cir. 1993) (reversing a rejection based on inherency because result due to optimization of conditions was not necessarily present in the prior art).Consequently, the Office Action's reliance on inherency is unsupported and thus improper.

Stated another way, the presence of these express teachings in Brede that teach away from the optical transceiver module characteristic means that the subject matter alleged by the Office Action to be inherent can never reasonably be said to necessarily flow from the Brede patent. Thus, the Office's current reliance on inherency can never satisfy the standard set forth in MPEP § 2112 for proper reliance on inherency.

In an abundance of care, Applicants herewith amend claims 1, 4-7, 9-10, 13-15, 17-18 and 21 to better and more specifically recite that which Applicants consider to be the invention. Applicants respectfully request reexamination and reconsideration of claims 1, 4-7, 9-10, 13-15, 17-18 and 21, as amended, and claims 3, 8, 12, 16 and 20.

Discussion regarding claims 2, 11, and 19: In the Office Action mailed on Feb. 16, 2012, the Office further rejects claims 2, 11, and 19 under 35 U.S.C. §103(a) for unpatentability over Brede in view of Patent Application Publication No. US 2007/0031153 filed by Aronson et al ("Aronson"). Applicants respectfully traverse these rejections which fail to state a proper *prima facie* case for unpatentability at least because

the Office has not met its burden to fully develop reasons supporting the suggestion or motivation to combine references.

The alleged inherent optical transceiver module characteristic in Brede is relied upon by the Office to further argue the obviousness of the form factor of the alleged optical transceiver module in Brede in view of Aronson to reject claims 2, 11 and 19. However, given the Office Action's reliance on inherency is unsupported and thus improper as previously argued above the Office has not stated a proper *prima facie* case for unpatentability because there is no teaching, suggestion or motivation to combine Brede and Aronson in the manner suggested by the Office.

Applicants respectfully request reexamination and reconsideration of claims 2, 11, and 19.

Conclusion: In an abundance of care, Applicants herewith amend claims 1, 4-7, 9-10, 13-15, 17-18 and 21. Additionally for the reasons set forth above, the Office fails to meet the primary legal requirements for a *prima facie* case for anticipation under 35 U.S.C. §102(e) and obviousness under 35 U.S.C. §103(a) sufficient to shift the burden of proof to the Applicants. For this reason, Applicants currently find no duty to submit evidence in rebuttal to any such *prima facie* case as required by applicable rules. Favorable re-examination and reconsideration of the application is respectfully requested and early allowance of the remaining claims is earnestly solicited.

Respectfully submitted,

/Alexander Soto/

Alexander Soto
Customer No. 93749
7673 Hazard Center Dr.
San Diego, CA 92108
858-527-2397
Alexander.I.Soto@gmail.com

Electronic Acknowledgement Receipt

EFS ID:	12799005
Application Number:	12512968
International Application Number:	
Confirmation Number:	6685
Title of Invention:	SYSTEM AND METHOD FOR PERFORMING HIGH-SPEED COMMUNICATIONS OVER FIBER OPTICAL NETWORKS
First Named Inventor/Applicant Name:	Alexander I. Soto
Customer Number:	93749
Filer:	Alexander Ivan Soto
Filer Authorized By:	
Attorney Docket Number:	UBI-002C
Receipt Date:	16-MAY-2012
Filing Date:	30-JUL-2009
Time Stamp:	22:03:41
Application Type:	Utility under 35 USC 111(a)

Payment information:

Submitted with Payment	no

File Listing:

Document Number	Document Description	File Name	File Size(Bytes)/ Message Digest	Multi Part /.zip	Pages (if appl.)
1	Applicant summary of interview with examiner	Examiner_Interiview_Summary .pdf	186371 04badbc18fa5d0a6f396d0d323644aceea9ef5f2	no	2

Warnings:

Information:

2	Amendment/Req. Reconsideration-After Non-Final Reject	AmendmentResponse_1st_OA _UBI-002C_05-14-2012.pdf	326930 166d9238f374f7eac80f6896503478f2813e477e	no	13
Warnings:					
Information:					
			Total Files Size (in bytes):	513301	

This Acknowledgement Receipt evidences receipt on the noted date by the USPTO of the indicated documents, characterized by the applicant, and including page counts, where applicable. It serves as evidence of receipt similar to a Post Card, as described in MPEP 503.

<u>New Applications Under 35 U.S.C. 111</u>
If a new application is being filed and the application includes the necessary components for a filing date (see 37 CFR 1.53(b)-(d) and MPEP 506), a Filing Receipt (37 CFR 1.54) will be issued in due course and the date shown on this Acknowledgement Receipt will establish the filing date of the application.

<u>National Stage of an International Application under 35 U.S.C. 371</u>
If a timely submission to enter the national stage of an international application is compliant with the conditions of 35 U.S.C. 371 and other applicable requirements a Form PCT/DO/EO/903 indicating acceptance of the application as a national stage submission under 35 U.S.C. 371 will be issued in addition to the Filing Receipt, in due course.

<u>New International Application Filed with the USPTO as a Receiving Office</u>
If a new international application is being filed and the international application includes the necessary components for an international filing date (see PCT Article 11 and MPEP 1810), a Notification of the International Application Number and of the International Filing Date (Form PCT/RO/105) will be issued in due course, subject to prescriptions concerning national security, and the date shown on this Acknowledgement Receipt will establish the international filing date of the application.

PATENTS **Docket No. UBI-02C**	
IN THE UNITED STATES PATENT AND TRADEMARK OFFICE	
In re Application of: **Alexander I. Soto et al.**	Group Art Unit: **2613**
Patent Application No.: **12/512,968**	
Filed on: **July 30, 2009**	
For: **SYSTEM AND METHOD FOR PERFORMING HIGH-SPEED COMMUNICATIONS OVER FIBER OPTICAL NETWORKS**	Examiner: Bello, Agustin

Commissioner for Patents
Mail Stop Amendment
PO Box 1450
Alexandria, VA 22313-4150

APPLICANTS' INTERVIEW SUMMARY PER 37 C.F.R. §1.133(b)

The attached Interview Summary for the telephonic interview with Examiner Bello conducted on May 9, 2012 is tendered herewith pursuant to 37 C.F.R. §1.133(b).

Respectfully submitted,

//Alexander Soto//

Alexander Soto
Customer No. 93749
7673 Hazard Center Dr.
San Diego, CA 92108
858-527-2397
Alexander.I.Soto@gmail.com

APPLICANTS' INTERVIEW SUMMARY PER 37 C.F.R. §1.133(b)

Patent Application No.	**12/512,968**
Attorney Docket	**UBI-002C**
Telephonic Interview Date & Time	May 9, 2012 1300hrs EDST

Participants:
Examiner Agustin Bello, 571-272-3026
Alex Soto, Applicant

Summary:

(a) No exhibits or demonstrations were presented.

(b) Claims 1 and 2 were discussed.

(c) Prior art reference Brede (Patent No. US 6,603,822 B2) was discussed in connection with the 35 USC 102(b) rejection of base claim 1.

(d) Prior art reference Aronson (Patent Application Pub. No. US 2007/0031153 A1) was discussed in connection with the 35 USC 103(a) rejection of claim 2.

(e) The primary argument presented by the Applicants was the absence of any reference in Brede in describing Fig. 3 element 12 as an optical transceiver module. In rebuttal, Examiner Bello argued someone skilled in the arts could possibly view Fig. 3 as an optical transceiver module.

(f) Possible amendments to claim 1 were discussed but no agreement was reached regarding a proposed amendment.

Conclusion:

Regarding Applicants' position that the Brede reference neither teaches nor suggests Fig. 3 is an optical transceiver module, Examiner Bello did not provide any specific reference in Brede to support the argument that Fig. 3 is an optical transceiver module and believes that Applicants' claims lack sufficient structure to distinguish from such a possible interpretation of Fig. 3 by someone skilled in the arts. So the rejections of Applicants' claims are not rejections based on anticipation of the claimed invention but rather rejections for claim over-breadth that may be remedied by adding the necessary structure to the base claims.

PTO/SB/06 (07-06)
Approved for use through 1/31/2007. OMB 0651-0032
U.S. Patent and Trademark Office; U.S. DEPARTMENT OF COMMERCE
Under the Paperwork Reduction Act of 1995, no persons are required to respond to a collection of information unless it displays a valid OMB control number.

PATENT APPLICATION FEE DETERMINATION RECORD

Substitute for Form PTO-875

Application or Docket Number	Filing Date	
12/512,968	07/30/2009	☐ To be Mailed

APPLICATION AS FILED – PART I

FOR	(Column 1) NUMBER FILED	(Column 2) NUMBER EXTRA	SMALL ENTITY ☒ RATE ($)	SMALL ENTITY FEE ($)	OR	OTHER THAN SMALL ENTITY RATE ($)	OTHER THAN SMALL ENTITY FEE ($)
☐ BASIC FEE (37 CFR 1.16(a), (b), or (c))	N/A	N/A	N/A			N/A	
☐ SEARCH FEE (37 CFR 1.16(k), (i), or (m))	N/A	N/A	N/A			N/A	
☐ EXAMINATION FEE (37 CFR 1.16(o), (p), or (q))	N/A	N/A	N/A			N/A	
TOTAL CLAIMS (37 CFR 1.16(i))	minus 20 =	*	X $ =		OR	X $ =	
INDEPENDENT CLAIMS (37 CFR 1.16(h))	minus 3 =	*	X $ =			X $ =	
☐ APPLICATION SIZE FEE (37 CFR 1.16(s))	If the specification and drawings exceed 100 sheets of paper, the application size fee due is $250 ($125 for small entity) for each additional 50 sheets or fraction thereof. See 35 U.S.C. 41(a)(1)(G) and 37 CFR 1.16(s).						
☐ MULTIPLE DEPENDENT CLAIM PRESENT (37 CFR 1.16(j))							
* If the difference in column 1 is less than zero, enter "0" in column 2.			TOTAL			TOTAL	

APPLICATION AS AMENDED – PART II

AMENDMENT 05/16/2012

	(Column 1) CLAIMS REMAINING AFTER AMENDMENT		(Column 2) HIGHEST NUMBER PREVIOUSLY PAID FOR	(Column 3) PRESENT EXTRA	SMALL ENTITY RATE ($)	SMALL ENTITY ADDITIONAL FEE ($)	OR	OTHER THAN SMALL ENTITY RATE ($)	OTHER THAN SMALL ENTITY ADDITIONAL FEE ($)
Total (37 CFR 1.16(i))	* 21	Minus	** 21	= 0	X $30 =	0	OR	X $ =	
Independent (37 CFR 1.16(h))	* 3	Minus	***3	= 0	X $125 =	0	OR	X $ =	
☐ Application Size Fee (37 CFR 1.16(s))									
☐ FIRST PRESENTATION OF MULTIPLE DEPENDENT CLAIM (37 CFR 1.16(j))							OR		
					TOTAL ADD'L FEE	0	OR	TOTAL ADD'L FEE	

AMENDMENT

	(Column 1) CLAIMS REMAINING AFTER AMENDMENT		(Column 2) HIGHEST NUMBER PREVIOUSLY PAID FOR	(Column 3) PRESENT EXTRA	RATE ($)	ADDITIONAL FEE ($)		RATE ($)	ADDITIONAL FEE ($)
Total (37 CFR 1.16(i))	*	Minus	**	=	X $ =		OR	X $ =	
Independent (37 CFR 1.16(h))	*	Minus	***	=	X $ =		OR	X $ =	
☐ Application Size Fee (37 CFR 1.16(s))									
☐ FIRST PRESENTATION OF MULTIPLE DEPENDENT CLAIM (37 CFR 1.16(j))							OR		
					TOTAL ADD'L FEE		OR	TOTAL ADD'L FEE	

* If the entry in column 1 is less than the entry in column 2, write "0" in column 3.
** If the "Highest Number Previously Paid For" IN THIS SPACE is less than 20, enter "20".
*** If the "Highest Number Previously Paid For" IN THIS SPACE is less than 3, enter "3".
The "Highest Number Previously Paid For" (Total or Independent) is the highest number found in the appropriate box in column 1.

Legal Instrument Examiner:
/NICOLE LOVE-HENSLEY/

This collection of information is required by 37 CFR 1.16. The information is required to obtain or retain a benefit by the public which is to file (and by the USPTO to process) an application. Confidentiality is governed by 35 U.S.C. 122 and 37 CFR 1.14. This collection is estimated to take 12 minutes to complete, including gathering, preparing, and submitting the completed application form to the USPTO. Time will vary depending upon the individual case. Any comments on the amount of time you require to complete this form and/or suggestions for reducing this burden, should be sent to the Chief Information Officer, U.S. Patent and Trademark Office, U.S. Department of Commerce, P.O. Box 1450, Alexandria, VA 22313-1450. DO NOT SEND FEES OR COMPLETED FORMS TO THIS ADDRESS. **SEND TO: Commissioner for Patents, P.O. Box 1450, Alexandria, VA 22313-1450.**
If you need assistance in completing the form, call 1-800-PTO-9199 and select option 2.

PTOL-413A (10-09)
Approved for use through 07/31/2012. OMB 0651-0031
U.S. Patent and Trademark Office: U.S. DEPARTMENT OF COMMERCE

Applicant Initiated Interview Request Form

Application No.: 12/512,968 First Named Applicant: Alexander Soto
Examiner: Bello, Agustin Art Unit: 2613 Status of Application: non-final rejection

Tentative Participants:
(1) Alex Soto, inventor **(2)**_____

(3)_____ **(4)**_____

Proposed Date of Interview: May 9, 2012 **Proposed Time:** 1pm EST **(AM/PM)**

Type of Interview Requested:
(1) [X] Telephonic (2) [ ] Personal (3) [ ] Video Conference

Exhibit To Be Shown or Demonstrated: [ ] YES [X] NO
If yes, provide brief description:_____

Issues To Be Discussed

Issues (Rej., Obj., etc)	Claims/ Fig. #s	Prior Art	Discussed	Agreed	Not Agreed
(1) Rej	1-21	Brede	[ ]	[ ]	[ ]
(2)			[ ]	[ ]	[ ]
(3)			[ ]	[ ]	[ ]
(4)			[ ]	[ ]	[ ]

[ ] Continuation Sheet Attached
[ ] Proposed Amendment or Arguments Attached
Brief Description of Arguments to be Presented:

Seeking further clarification on the optical module nature of Brede Fig 3. element 12.

An interview was conducted on the above-identified application on _____.
NOTE: This form should be completed by applicant and submitted to the examiner in advance of the interview (see MPEP § 713.01).
This application will not be delayed from issue because of applicant's failure to submit a written record of this interview. Therefore, applicant is advised to file a statement of the substance of this interview (37 CFR 1.133(b)) as soon as possible.

//Alexander Soto//
Applicant/Applicant's Representative Signature

Examiner/SPE Signature

Alexander Soto
Typed/Printed Name of Applicant or Representative

Registration Number, if applicable

This collection of information is required by 37 CFR 1.133. The information is required to obtain or retain a benefit by the public which is to file (and by the USPTO to process) an application. Confidentiality is governed by 35 U.S.C. 122 and 37 CFR 1.11 and 1.14. This collection is estimated to take 21 minutes to complete, including gathering, preparing, and submitting the completed application form to the USPTO. Time will vary depending upon the individual case. Any comments on the amount of time you require to complete this form and/or suggestions for reducing this burden, should be sent to the Chief Information Officer, U.S. Patent and Trademark Office, U.S. Department of Commerce, P.O. Box 1450, Alexandria, VA 22313-1450. DO NOT SEND FEES OR COMPLETED FORMS TO THIS ADDRESS. SEND TO: Commissioner for Patents, P.O. Box 1450, Alexandria, VA 22313-1450.
If you need assistance in completing the form, call 1-800-PTO-9199 and select option 2.

Electronic Acknowledgement Receipt

EFS ID:	12685727
Application Number:	12512968
International Application Number:	
Confirmation Number:	6685
Title of Invention:	SYSTEM AND METHOD FOR PERFORMING HIGH-SPEED COMMUNICATIONS OVER FIBER OPTICAL NETWORKS
First Named Inventor/Applicant Name:	Alexander I. Soto
Customer Number:	93749
Filer:	Alexander Ivan Soto
Filer Authorized By:	
Attorney Docket Number:	UBI-002C
Receipt Date:	02-MAY-2012
Filing Date:	30-JUL-2009
Time Stamp:	14:57:17
Application Type:	Utility under 35 USC 111(a)

Payment information:

Submitted with Payment	no

File Listing:

Document Number	Document Description	File Name	File Size(Bytes)/ Message Digest	Multi Part /.zip	Pages (if appl.)
1	Letter Requesting Interview with Examiner	interview_request_form_v2.pdf	126094 a4f49587bf21b22dc84b51bc61f7ac3b73776a25	no	1

Warnings:

Information:

Total Files Size (in bytes):	126094

This Acknowledgement Receipt evidences receipt on the noted date by the USPTO of the indicated documents, characterized by the applicant, and including page counts, where applicable. It serves as evidence of receipt similar to a Post Card, as described in MPEP 503.

New Applications Under 35 U.S.C. 111
If a new application is being filed and the application includes the necessary components for a filing date (see 37 CFR 1.53(b)-(d) and MPEP 506), a Filing Receipt (37 CFR 1.54) will be issued in due course and the date shown on this Acknowledgement Receipt will establish the filing date of the application.

National Stage of an International Application under 35 U.S.C. 371
If a timely submission to enter the national stage of an international application is compliant with the conditions of 35 U.S.C. 371 and other applicable requirements a Form PCT/DO/EO/903 indicating acceptance of the application as a national stage submission under 35 U.S.C. 371 will be issued in addition to the Filing Receipt, in due course.

New International Application Filed with the USPTO as a Receiving Office
If a new international application is being filed and the international application includes the necessary components for an international filing date (see PCT Article 11 and MPEP 1810), a Notification of the International Application Number and of the International Filing Date (Form PCT/RO/105) will be issued in due course, subject to prescriptions concerning national security, and the date shown on this Acknowledgement Receipt will establish the international filing date of the application.

UNITED STATES PATENT AND TRADEMARK OFFICE

UNITED STATES DEPARTMENT OF COMMERCE
United States Patent and Trademark Office
Address: COMMISSIONER FOR PATENTS
P.O. Box 1450
Alexandria, Virginia 22313-1450
www.uspto.gov

APPLICATION NO.	FILING DATE	FIRST NAMED INVENTOR	ATTORNEY DOCKET NO.	CONFIRMATION NO.
12/512,968	07/30/2009	Alexander I. Soto	UBI-002C	6685

93749 7590 02/16/2012
Alexander Soto
7673 Hazard Center Dr.
San Diego, CA 92108

EXAMINER
BELLO, AGUSTIN

ART UNIT	PAPER NUMBER
2613	

NOTIFICATION DATE	DELIVERY MODE
02/16/2012	ELECTRONIC

Please find below and/or attached an Office communication concerning this application or proceeding.

The time period for reply, if any, is set in the attached communication.

Notice of the Office communication was sent electronically on above-indicated "Notification Date" to the following e-mail address(es):

alex@iponsystems.com

PTOL-90A (Rev. 04/07)

Office Action Summary	Application No.	Applicant(s)	
	12/512,968	SOTO ET AL.	
	Examiner	Art Unit	
	AGUSTIN BELLO	2613	

-- The MAILING DATE of this communication appears on the cover sheet with the correspondence address --

Period for Reply

A SHORTENED STATUTORY PERIOD FOR REPLY IS SET TO EXPIRE 3 MONTH(S) OR THIRTY (30) DAYS, WHICHEVER IS LONGER, FROM THE MAILING DATE OF THIS COMMUNICATION.

- Extensions of time may be available under the provisions of 37 CFR 1.136(a). In no event, however, may a reply be timely filed after SIX (6) MONTHS from the mailing date of this communication.
- If NO period for reply is specified above, the maximum statutory period will apply and will expire SIX (6) MONTHS from the mailing date of this communication.
- Failure to reply within the set or extended period for reply will, by statute, cause the application to become ABANDONED (35 U.S.C. § 133). Any reply received by the Office later than three months after the mailing date of this communication, even if timely filed, may reduce any earned patent term adjustment. See 37 CFR 1.704(b).

Status

1)☒ Responsive to communication(s) filed on *30 July 2009*.

2a)☐ This action is **FINAL**. 2b)☒ This action is non-final.

3)☐ An election was made by the applicant in response to a restriction requirement set forth during the interview on _____; the restriction requirement and election have been incorporated into this action.

4)☐ Since this application is in condition for allowance except for formal matters, prosecution as to the merits is closed in accordance with the practice under *Ex parte Quayle*, 1935 C.D. 11, 453 O.G. 213.

Disposition of Claims

5)☒ Claim(s) *1-21* is/are pending in the application.

5a) Of the above claim(s) _____ is/are withdrawn from consideration.

6)☐ Claim(s) _____ is/are allowed.

7)☒ Claim(s) *1-21* is/are rejected.

8)☐ Claim(s) _____ is/are objected to.

9)☐ Claim(s) _____ are subject to restriction and/or election requirement.

Application Papers

10)☐ The specification is objected to by the Examiner.

11)☒ The drawing(s) filed on *30 July 2009* is/are: a)☒ accepted or b)☐ objected to by the Examiner.

Applicant may not request that any objection to the drawing(s) be held in abeyance. See 37 CFR 1.85(a).

Replacement drawing sheet(s) including the correction is required if the drawing(s) is objected to. See 37 CFR 1.121(d).

12)☐ The oath or declaration is objected to by the Examiner. Note the attached Office Action or form PTO-152.

Priority under 35 U.S.C. § 119

13)☐ Acknowledgment is made of a claim for foreign priority under 35 U.S.C. § 119(a)-(d) or (f).

a)☐ All b)☐ Some * c)☐ None of:

1.☐ Certified copies of the priority documents have been received.

2.☐ Certified copies of the priority documents have been received in Application No. _____.

3.☐ Copies of the certified copies of the priority documents have been received in this National Stage application from the International Bureau (PCT Rule 17.2(a)).

* See the attached detailed Office action for a list of the certified copies not received.

Attachment(s)

1) ☒ Notice of References Cited (PTO-892)

2) ☐ Notice of Draftsperson's Patent Drawing Review (PTO-948)

3) ☒ Information Disclosure Statement(s) (PTO/SB/08) Paper No(s)/Mail Date *07/30/09*.

4) ☐ Interview Summary (PTO-413) Paper No(s)/Mail Date. _____ .

5) ☐ Notice of Informal Patent Application

6) ☐ Other: _____.

DETAILED ACTION

Claim Rejections - 35 USC § 102

1. The following is a quotation of the appropriate paragraphs of 35 U.S.C. 102 that form the basis for the rejections under this section made in this Office action:

> A person shall be entitled to a patent unless –
>
> (e) the invention was described in (1) an application for patent, published under section 122(b), by another filed in the United States before the invention by the applicant for patent or (2) a patent granted on an application for patent by another filed in the United States before the invention by the applicant for patent, except that an international application filed under the treaty defined in section 351(a) shall have the effects for purposes of this subsection of an application filed in the United States only if the international application designated the United States and was published under Article 21(2) of such treaty in the English language.

2. Claims 1, 3-10, 12-18, and 20-21 are rejected under 35 U.S.C. 102(e) as being anticipated by Brede (Patent No. US 6,603,822 B2).

Regarding claim 1, 10, 18, Brede teaches an optical transceiver module (Figure 3) of an Optical Line Terminal in a passive optical network for transmitting continuous mode optical data signals on a first wavelength according to an m-ary modulation format and to equalize an optical data channel responsive to a received burst mode optical data signal on a second wavelength over a fiber optic cable, the optical transceiver module further comprising: a modulator (reference numeral 82 in Figure 3) configured to generate according to an m-ary modulation method a first m-ary modulation signal representative of a first binary data signal input to the optical transceiver module; a driver (reference numeral 25 in Figure 4; reference numeral 82 in Figure 3; reference numeral 148 in Figure 21; reference numeral 246 in Figure 37) electrically coupled to the modulator configured to amplify the first m-ary modulation

signal in order to drive an optical transmitter; an optical transmitter (reference numeral 14 in Figure 3; reference numeral 501 in Figure 4) electrically coupled to the driver configured to emit the optical continuous mode signal on the first wavelength on the fiber optic cable representative of the amplified first m-ary modulation signal; an optical detector (reference numeral 16 in Figure 3; reference numeral 502 in Figure 4) configured to receive the burst mode optical signal on the second wavelength from the fiber optic cable and generate a representative second electrical signal; an amplifier (reference numeral 82 in Figure 3; reference numeral 154 in Figure 22; reference numeral 234 in Figure 37) electrically coupled to the optical detector and configured to amplify the second electrical signal to facilitate clock and data recovery; a clock data recovery and equalization unit (reference numeral 54 in Figure 2; reference numeral 168, 172 in Figure 22; reference numeral 214, 222 in Figure 26; Figure 35) electrically coupled to the amplifier and configured to equalize a burst mode channel, recover clock data timing and to generate a second m-ary modulation signal; and a de-modulator (reference numeral 174, 176 in Figure 22; reference numeral 216 in Figure 26; reference numeral 366 in Figure 35) electrically coupled to the clock data recovery and equalization unit and configured to generate a second binary data output signal representative of the second m-ary modulation signal.

Regarding claim 3, 12, 20, Brede teaches the optical transceiver module of claim 1, wherein the m-ary modulation method is selected from the group essentially consisting of: quadrature amplitude modulation (QAM); QAM-32 (column 6 lines 5-18);

QAM-256; quadrature phase shift keying (QPSK); differential QPSK; return-to-zero QPSK; dual-polarized QPSK; orthogonal frequency division multiplexing (OFDM) (column 3 lines 11-21; column 11 lines 1-8; column 19 lines 34-67); pulse amplitude modulation (PAM); PAM-5; and PAM- 17.

Regarding claim 4, 13, Brede teaches the optical transceiver module of claim 1, wherein equalizing routine employed by the equalizer is selected from the group consisting of: a blind equalization routine which does not use a known training sequence and decision-directed equalization routine using a known training sequence (column 8 lines 59 – column 9 line 9; column 54 lines 57-67; column 104 lines 21-45).

Regarding claim 5, 14, Brede teaches the optical transceiver module of claim 4, wherein the known training sequence of a decision-directed equalization routine is multiplexed in a frame of the received burst mode optical signal (column 8 lines 59 – column 9 line 9; column 54 lines 57-67; column 104 lines 21-45).

Regarding claim 6, 21, Brede teaches the optical transceiver module of claim 1, further comprising: means for storing a first set of determined settings which improve processing of received burst mode data from a first client on the passive optical network associated with a first optical channel; means for loading a predetermined second set of settings which improve prove processing of received burst mode data from a second client on the passive optical network associated with a second optical channel prior to processing received burst mode data from the second client (column 67 lines 5-11).

Regarding claim 7, 15, Brede teaches the optical transceiver module of claim 1, further comprising: an encoder (reference numeral 147 in Figure 21; reference numeral 248, 250 in Figure 37) coupled electrically to the input of the modulator and configured to encode the first binary data signal input as input to the modulator with a method designed to improve the energy per bit required to deliver the data transmitted by the optical transceiver module; and a decoder (Figure 26; Figure 34; reference numeral 228, 230, 240, 242 in Figure 37) coupled electrically to the output of the demodulator and configured to decode the second binary data output signal and correct for errors.

Regarding claim 8, 16, Brede teaches the optical transceiver module of claim 7, wherein the encoder or decoder method is selected from the group essentially consisting of: Reed-Solomon coding; trellis coding; Low-density parity-check coding, and Turbo coding (column 5 lines 42-52; column 31 lines 33-55; column 33 lines 1-4).

Regarding claim 9, 17, Brede teaches the optical transceiver module of claim 1, wherein the passive optical network is a coarse wavelength-division multiplexing (CWDM) or dense wavelength-division multiplexing (DWDM) passive optical network and an M number of wavelengths are transmitted and an N number of wavelengths are received over the fiber optic cable, the optical transceiver module further comprising: an M number of modulators (reference numeral 82 in Figure 3) coupled respectively to an M number of drivers (reference numeral 25 in Figure 4) coupled respectively to an M number of optical transmitters (reference numeral 501 in Figure 4) such that a respective M number of optical m-ary modulated signals are transmitted over the fiber

optic cable (reference numeral 24 in Figure 4); and an N number of optical detectors (reference numeral 502 in Figure 4) coupled respectively to an N number of amplifiers (reference numeral 82 in Figure 3; reference numeral 154 in Figure 22; reference numeral 234 in Figure 37) coupled respectively to an N number of clock and data recovery units (reference numeral 54 in Figure 2; reference numeral 168, 172 in Figure 22; reference numeral 214, 222 in Figure 26; Figure 35) coupled respectively to an N number of equalizers coupled (reference numeral 54 in Figure 2; reference numeral 168, 172 in Figure 22; reference numeral 214, 222 in Figure 26; Figure 35) to an N number of demodulators (reference numeral 82 in Figure 3) such that a respective N number of binary modulated electrical signals are generated responsive to an N number of received optical data signals received over the fiber optic cable.

Claim Rejections - 35 USC § 103

3. The following is a quotation of 35 U.S.C. 103(a) which forms the basis for all obviousness rejections set forth in this Office action:

> (a) A patent may not be obtained though the invention is not identically disclosed or described as set forth in section 102 of this title, if the differences between the subject matter sought to be patented and the prior art are such that the subject matter as a whole would have been obvious at the time the invention was made to a person having ordinary skill in the art to which said subject matter pertains. Patentability shall not be negatived by the manner in which the invention was made.

4. Claims 2, 11, and 19 are rejected under 35 U.S.C. 103(a) as being unpatentable over Brede in view of Aronson (Patent Application Publication No. US 2007/0031153 A1).

Regarding claim 2, 11, 19, Brede teaches the optical transceiver module of claim 1, but fails to specifically teach that the form factor of the optical transceiver module is

selected from the group consisting essentially of: SFP; SFP+; XFP; X2; XENPAK; XPA; and 300 pin transceiver form factors. However, as evidenced by Aronson, these types of form factors are well known in the art (paragraph [0005], [0011], [0045]). One skilled in the art would have been motivated to utilize any of the claimed form factors in order to meet design requirements, budgetary requirements, or performance requirements such as achieving 10 Gb/s (paragraph [0005], [0011], [0045]). Therefore, it would have been obvious to one skilled in the art at the time the invention was made to utilize a XFP form factor in Brede as taught by Aronson.

Conclusion

Any inquiry concerning this communication or earlier communications from the examiner should be directed to AGUSTIN BELLO whose telephone number is (571)272-3026. The examiner can normally be reached on M-F 8:30-6:00.

If attempts to reach the examiner by telephone are unsuccessful, the examiner's supervisor, Kenneth Vanderpuye can be reached on (571)272-3078. The fax phone number for the organization where this application or proceeding is assigned is 571-273-8300.

Information regarding the status of an application may be obtained from the Patent Application Information Retrieval (PAIR) system. Status information for published applications may be obtained from either Private PAIR or Public PAIR. Status information for unpublished applications is available through Private PAIR only. For more information about the PAIR system, see http://pair-direct.uspto.gov. Should you have questions on access to the Private PAIR system, contact the Electronic Business Center (EBC) at 866-217-9197 (toll-free). If you would like assistance from a USPTO Customer Service Representative or access to the automated information system, call 800-786-9199 (IN USA OR CANADA) or 571-272-1000.

/Agustin Bello/
Primary Examiner, Art Unit 2613

Notice of References Cited	Application/Control No. 12/512,968	Applicant(s)/Patent Under Reexamination SOTO ET AL.	
	Examiner AGUSTIN BELLO	Art Unit 2613	Page 1 of 1

U.S. PATENT DOCUMENTS

*		Document Number Country Code-Number-Kind Code	Date MM-YYYY	Name	Classification
*	A	US-6,603,822 B2	08-2003	Brede et al.	375/340
*	B	US-2004/0028408 A1	02-2004	Cox et al.	398/66
*	C	US-2007/0031153 A1	02-2007	Aronson et al.	398/138
*	D	US-7,242,868 B2	07-2007	Soto et al.	398/72
*	E	US-7,317,769 B2	01-2008	Tonietto et al.	375/340
*	F	US-7,321,612 B2	01-2008	Tonietto et al.	375/219
*	G	US-7,486,894 B2	02-2009	Aronson et al.	398/135
*	H	US-2010/0158530 A1	06-2010	Soto et al.	398/79
*	I	US-7,729,617 B2	06-2010	Sheth et al.	398/135
*	J	US-2011/0135312 A1	06-2011	EL-AHMADI et al.	398/135
	K	US-			
	L	US-			
	M	US-			

FOREIGN PATENT DOCUMENTS

*		Document Number Country Code-Number-Kind Code	Date MM-YYYY	Country	Name	Classification
	N					
	O					
	P					
	Q					
	R					
	S					
	T					

NON-PATENT DOCUMENTS

*		Include as applicable: Author, Title Date, Publisher, Edition or Volume, Pertinent Pages)
	U	
	V	
	W	
	X	

*A copy of this reference is not being furnished with this Office action. (See MPEP § 707.05(a).)
Dates in MM-YYYY format are publication dates. Classifications may be US or foreign.

UNITED STATES PATENT AND TRADEMARK OFFICE

UNITED STATES DEPARTMENT OF COMMERCE
United States Patent and Trademark Office
Address: COMMISSIONER FOR PATENTS
P.O. Box 1450
Alexandria, Virginia 22313-1450
www.uspto.gov

BIB DATA SHEET

CONFIRMATION NO. 6685

SERIAL NUMBER	FILING or 371(c) DATE	CLASS	GROUP ART UNIT	ATTORNEY DOCKET NO.
12/512,968	07/30/2009 RULE	398	2613	UBI-002C

APPLICANTS
Alexander I. Soto, San Diego, CA;
Walter G. Soto, San Clemente, CA;

**** CONTINUING DATA ***************************
This application is a CIP of 11/772,187 06/30/2007 ABN
which is a CON of 10/865,547 06/10/2004 PAT 7,242,868
which claims benefit of 60/477,845 06/10/2003
and claims benefit of 60/480,488 06/21/2003

**** FOREIGN APPLICATIONS ***************************

**** IF REQUIRED, FOREIGN FILING LICENSE GRANTED **** ** SMALL ENTITY **
08/12/2009

Foreign Priority claimed	☐ Yes ☑ No	☐ Met after Allowance	STATE OR COUNTRY	SHEETS DRAWINGS	TOTAL CLAIMS	INDEPENDENT CLAIMS
35 USC 119(a-d) conditions met	☐ Yes ☑ No		CA	9	21	3
Verified and Acknowledged	/AGUSTIN BELLO/ Examiner's Signature	Initials				

ADDRESS
Alexander Soto
7673 Hazard Center Dr.
San Diego, CA 92108
UNITED STATES

TITLE
SYSTEM AND METHOD FOR PERFORMING HIGH-SPEED COMMUNICATIONS OVER FIBER OPTICAL NETWORKS

FILING FEE RECEIVED		
488	FEES: Authority has been given in Paper No._____ to charge/credit DEPOSIT ACCOUNT No._____ for following:	☐ All Fees ☐ 1.16 Fees (Filing) ☐ 1.17 Fees (Processing Ext. of time) ☐ 1.18 Fees (Issue) ☐ Other _____ ☐ Credit

BIB (Rev. 05/07).

PTO/SB/08a (07-09)
Approved for use through 07/31/2012. OMB 0651-0031
U.S. Patent and Trademark Office; U.S. DEPARTMENT OF COMMERCE
Under the Paperwork Reduction Act of 1995, no persons are required to respond to a collection of information unless it contains a valid OMB control number.

Substitute for form 1449/PTO

INFORMATION DISCLOSURE STATEMENT BY APPLICANT

(Use as many sheets as necessary)

Sheet 1 of 1

Complete if Known	
Application Number	
Filing Date	July 28, 2009
First Named Inventor	Soto, et al.
Art Unit	
Examiner Name	
Attorney Docket Number	UBI-002C

U. S. PATENT DOCUMENTS

Examiner Initials*	Cite No.[1]	Document Number Number-Kind Code[2] (if known)	Publication Date MM-DD-YYYY	Name of Patentee or Applicant of Cited Document	Pages, Columns, Lines, Where Relevant Passages or Relevant Figures Appear
	1	US- 5150247	09-22-1992	Sharpe et al.	
	2	US- 6950477	09-27-2005	Meehan et al.	
	3	US- 6067319	05-23-2000	Copeland, Gregory Clark	
	4	US- 5363408	11-08-1994	Paik et al.	
	5	US- 5880863	03-09-1999	Rideout et al.	
	6	US- 6490727	12-03-2002	Strolle et al.	
	7	US- 7242868	07-10-2007	Soto et al.	
	8	US- 20080166124	07-10-2008	Soto et al.	
		US-			
		US-			
		US-			
		US-			
		US-			
		US-			
		US-			
		US-			
		US-			
		US-			
		US-			

FOREIGN PATENT DOCUMENTS

Examiner Initials*	Cite No.[1]	Foreign Patent Document Country Code[3]-Number[4]-Kind Code[5] (if known)	Publication Date MM-DD-YYYY	Name of Patentee or Applicant of Cited Document	Pages, Columns, Lines, Where Relevant Passages Or Relevant Figures Appear	T[6]

Examiner Signature		Date Considered	

*EXAMINER: Initial if reference considered, whether or not citation is in conformance with MPEP 609. Draw line through citation if not in conformance and not considered. Include copy of this form with next communication to applicant. [1] Applicant's unique citation designation number (optional). [2] See Kinds Codes of USPTO Patent Documents at www.uspto.gov or MPEP 901.04. [3] Enter Office that issued the document, by the two-letter code (WIPO Standard ST.3). [4] For Japanese patent documents, the indication of the year of the reign of the Emperor must precede the serial number of the patent document. [5] Kind of document by the appropriate symbols as indicated on the document under WIPO Standard ST.16 if possible. [6] Applicant is to place a check mark here if English language Translation is attached.

This collection of information is required by 37 CFR 1.97 and 1.98. The information is required to obtain or retain a benefit by the public which is to file (and by the USPTO to process) an application. Confidentiality is governed by 35 U.S.C. 122 and 37 CFR 1.14. This collection is estimated to take 2 hours to complete, including gathering, preparing, and submitting the completed application form to the USPTO. Time will vary depending upon the individual case. Any comments on the amount of time you require to complete this form and/or suggestions for reducing this burden, should be sent to the Chief Information Officer, U.S. Patent and Trademark Office, P.O. Box 1450, Alexandria, VA 22313-1450. DO NOT SEND FEES OR COMPLETED FORMS TO THIS ADDRESS. **SEND TO: Commissioner for Patents, P.O. Box 1450, Alexandria, VA 22313-1450.**

If you need assistance in completing the form, call 1-800-PTO-9199 (1-800-786-9199) and select option 2.

ALL REFERENCES CONSIDERED EXCEPT WHERE LINED THROUGH. /A.B./

PTO/SB/08b (07-09)
Approved for use through 07/31/2012. OMB 0651-0031
U.S. Patent and Trademark Office; U.S. DEPARTMENT OF COMMERCE
Under the Paperwork Reduction Act of 1995, no persons are required to respond to a collection of information unless it contains a valid OMB control number.

Substitute for form 1449/PTO

INFORMATION DISCLOSURE STATEMENT BY APPLICANT

(Use as many sheets as necessary)

Sheet	1	of	1

Complete if Known	
Application Number	
Filing Date	July 28, 2009
First Named Inventor	Soto, et al.
Art Unit	
Examiner Name	
Attorney Docket Number	UBI-002C

NON PATENT LITERATURE DOCUMENTS

Examiner Initials*	Cite No.[1]	Include name of the author (in CAPITAL LETTERS), title of the article (when appropriate), title of the item (book, magazine, journal, serial, symposium, catalog, etc.), date, page(s), volume-issue number(s), publisher, city and/or country where published.	T[2]
	1	Delavaux, et al., "QAM-PON and Super PON for Access Distribution Networks", 2000	

Examiner Signature	/Agustin Bello/ (02/12/2012)	Date Considered	

*EXAMINER: Initial if reference considered, whether or not citation is in conformance with MPEP 609. Draw line through citation if not in conformance and not considered. Include copy of this form with next communication to applicant.
1 Applicant's unique citation designation number (optional). 2 Applicant is to place a check mark here if English language Translation is attached.
This collection of information is required by 37 CFR 1.98. The information is required to obtain or retain a benefit by the public which is to file (and by the USPTO to process) an application. Confidentiality is governed by 35 U.S.C. 122 and 37 CFR 1.14. This collection is estimated to take 2 hours to complete, including gathering, preparing, and submitting the completed application form to the USPTO. Time will vary depending upon the individual case. Any comments on the amount of time you require to complete this form and/or suggestions for reducing this burden, should be sent to the Chief Information Officer, U.S. Patent and Trademark Office, P.O. Box 1450, Alexandria, VA 22313-1450. DO NOT SEND FEES OR COMPLETED FORMS TO THIS ADDRESS. **SEND TO: Commissioner for Patents, P.O. Box 1450, Alexandria, VA 22313-1450.**

If you need assistance in completing the form, call 1-800-PTO-9199 (1-800-786-9199) and select option 2.

ALL REFERENCES CONSIDERED EXCEPT WHERE LINED THROUGH. /A.B./

Index of Claims	Application/Control No.	Applicant(s)/Patent Under Reexamination
	12512968	SOTO ET AL.
	Examiner	**Art Unit**
	AGUSTIN BELLO	2613

✓	Rejected	-	Cancelled	N	Non-Elected	A	Appeal
=	Allowed	÷	Restricted	I	Interference	O	Objected

☐ Claims renumbered in the same order as presented by applicant ☐ CPA ☐ T.D. ☐ R.1.47

CLAIM		DATE								
Final	Original	02/12/2012								
	1	✓								
	2	✓								
	3	✓								
	4	✓								
	5	✓								
	6	✓								
	7	✓								
	8	✓								
	9	✓								
	10	✓								
	11	✓								
	12	✓								
	13	✓								
	14	✓								
	15	✓								
	16	✓								
	17	✓								
	18	✓								
	19	✓								
	20	✓								
	21	✓								

Search Notes	Application/Control No.	Applicant(s)/Patent Under Reexamination
	12512968	SOTO ET AL.
	Examiner	**Art Unit**
	AGUSTIN BELLO	2613

SEARCHED			
Class	**Subclass**	**Date**	**Examiner**
398	66-73	02/11/12	ab

SEARCH NOTES		
Search Notes	**Date**	**Examiner**

INTERFERENCE SEARCH			
Class	**Subclass**	**Date**	**Examiner**

UNITED STATES PATENT AND TRADEMARK OFFICE

UNITED STATES DEPARTMENT OF COMMERCE
United States Patent and Trademark Office
Address: COMMISSIONER FOR PATENTS
P.O. Box 1450
Alexandria, Virginia 22313-1450
www.uspto.gov

APPLICATION NUMBER	FILING OR 371(C) DATE	FIRST NAMED APPLICANT	ATTY. DOCKET NO./TITLE
12/512,968	07/30/2009	Alexander I. Soto	UBI-002C

CONFIRMATION NO. 6685

93749
Alexander Soto
7673 Hazard Center Dr.
San Diego, CA 92108

PUBLICATION NOTICE

OC000000042264915

Title:SYSTEM AND METHOD FOR PERFORMING HIGH-SPEED COMMUNICATIONS OVER FIBER OPTICAL NETWORKS

Publication No.US-2010-0158530-A1
Publication Date:06/24/2010

NOTICE OF PUBLICATION OF APPLICATION

The above-identified application will be electronically published as a patent application publication pursuant to 37 CFR 1.211, et seq. The patent application publication number and publication date are set forth above.

The publication may be accessed through the USPTO's publically available Searchable Databases via the Internet at www.uspto.gov. The direct link to access the publication is currently http://www.uspto.gov/patft/.

The publication process established by the Office does not provide for mailing a copy of the publication to applicant. A copy of the publication may be obtained from the Office upon payment of the appropriate fee set forth in 37 CFR 1.19(a)(1). Orders for copies of patent application publications are handled by the USPTO's Office of Public Records. The Office of Public Records can be reached by telephone at (703) 308-9726 or (800) 972-6382, by facsimile at (703) 305-8759, by mail addressed to the United States Patent and Trademark Office, Office of Public Records, Alexandria, VA 22313-1450 or via the Internet.

In addition, information on the status of the application, including the mailing date of Office actions and the dates of receipt of correspondence filed in the Office, may also be accessed via the Internet through the Patent Electronic Business Center at www.uspto.gov using the public side of the Patent Application Information and Retrieval (PAIR) system. The direct link to access this status information is currently http://pair.uspto.gov/. Prior to publication, such status information is confidential and may only be obtained by applicant using the private side of PAIR.

Further assistance in electronically accessing the publication, or about PAIR, is available by calling the Patent Electronic Business Center at 1-866-217-9197.

Office of Data Managment, Application Assistance Unit (571) 272-4000, or (571) 272-4200, or 1-888-786-0101

UNITED STATES PATENT AND TRADEMARK OFFICE

UNITED STATES DEPARTMENT OF COMMERCE
United States Patent and Trademark Office
Address: COMMISSIONER FOR PATENTS
P.O. Box 1450
Alexandria, Virginia 22313-1450
www.uspto.gov

APPLICATION NUMBER	FILING OR 371(C) DATE	FIRST NAMED APPLICANT	ATTY. DOCKET NO./TITLE
12/512,968	07/30/2009	Alexander I. Soto	UBI-002C

CONFIRMATION NO. 6685

POA ACCEPTANCE LETTER

93749
Alexander Soto
7673 Hazard Center Dr.
San Diego, CA 92108

OC000000041457557

Date Mailed: 05/05/2010

NOTICE OF ACCEPTANCE OF POWER OF ATTORNEY

This is in response to the Power of Attorney filed 04/28/2010.

The Power of Attorney in this application is accepted. Correspondence in this application will be mailed to the above address as provided by 37 CFR 1.33.

/skiflemariam/

Office of Data Management, Application Assistance Unit (571) 272-4000, or (571) 272-4200, or 1-888-786-0101

UNITED STATES PATENT AND TRADEMARK OFFICE

UNITED STATES DEPARTMENT OF COMMERCE
United States Patent and Trademark Office
Address: COMMISSIONER FOR PATENTS
P.O. Box 1450
Alexandria, Virginia 22313-1450
www.uspto.gov

APPLICATION NUMBER	FILING OR 371(C) DATE	FIRST NAMED APPLICANT	ATTY. DOCKET NO./TITLE
12/512,968	07/30/2009	Alexander I. Soto	UBI-002C

CONFIRMATION NO. 6685

POWER OF ATTORNEY NOTICE

50625
JAMES ALBERT WARD
6924 CAMINO PACHECO
SAN DIEGO, CA 92111

OC000000041457545

Date Mailed: 05/05/2010

NOTICE REGARDING CHANGE OF POWER OF ATTORNEY

This is in response to the Power of Attorney filed 04/28/2010.

- The Power of Attorney to you in this application has been revoked by the applicant. Future correspondence will be mailed to the new address of record(37 CFR 1.33).

/skiflemariam/

Office of Data Management, Application Assistance Unit (571) 272-4000, or (571) 272-4200, or 1-888-786-0101

PTO/SB/81 (01-09)
Approved for use through 11/30/2011. OMB 0651-0035
U.S. Patent and Trademark Office; U.S. DEPARTMENT OF COMMERCE
Under the Paperwork Reduction Act of 1995, no persons are required to respond to a collection of information unless it displays a valid OMB control number.

POWER OF ATTORNEY OR REVOCATION OF POWER OF ATTORNEY WITH A NEW POWER OF ATTORNEY AND CHANGE OF CORRESPONDENCE ADDRESS

Application Number	12/512,968
Filing Date	July 30, 2009
First Named Inventor	Alexander I. Soto et al.
Title	SYSTEM AND METHOD FOR PERFORMING HIGH-SPEED
Art Unit	
Examiner Name	
Attorney Docket Number	UBI-002C

I hereby revoke all previous powers of attorney given in the above-identified application.

☐ A Power of Attorney is submitted herewith.

OR

☐ I hereby appoint Practitioner(s) associated with the following Customer Number as my/our attorney(s) or agent(s) to prosecute the application identified above, and to transact all business in the United States Patent and Trademark Office connected therewith:

OR

☐ I hereby appoint Practitioner(s) named below as my/our attorney(s) or agent(s) to prosecute the application identified above, and to transact all business in the United States Patent and Trademark Office connected therewith:

Practitioner(s) Name	Registration Number

Please recognize or change the correspondence address for the above-identified application to:

☐ The address associated with the above-mentioned Customer Number.

OR

☒ The address associated with Customer Number: 93749

OR

☐ Firm or Individual Name					
Address					
City		State		Zip	
Country					
Telephone		Email			

I am the:

☒ Applicant/Inventor.

OR

☐ Assignee of record of the entire interest. See 37 CFR 3.71.
Statement under 37 CFR 3.73(b) (Form PTO/SB/96) submitted herewith or filed on _____

SIGNATURE of Applicant or Assignee of Record

Signature		Date	04/24/2010
Name	Walter Soto	Telephone	949-923-5567
Title and Company			

NOTE: Signatures of all the inventors or assignees of record of the entire interest or their representative(s) are required. Submit multiple forms if more than one signature is required, see below*.

☒ *Total of 2 forms are submitted.

This collection of information is required by 37 CFR 1.31, 1.32 and 1.33. The information is required to obtain or retain a benefit by the public which is to file (and by the USPTO to process) an application. Confidentiality is governed by 35 U.S.C. 122 and 37 CFR 1.11 and 1.14. This collection is estimated to take 3 minutes to complete, including gathering, preparing, and submitting the completed application form to the USPTO. Time will vary depending upon the individual case. Any comments on the amount of time you require to complete this form and/or suggestions for reducing this burden, should be sent to the Chief Information Officer, U.S. Patent and Trademark Office, U.S. Department of Commerce, P.O. Box 1450, Alexandria, VA 22313-1450. DO NOT SEND FEES OR COMPLETED FORMS TO THIS ADDRESS. SEND TO: **Commissioner for Patents, P.O. Box 1450, Alexandria, VA 22313-1450.**

If you need assistance in completing the form, call 1-800-PTO-9199 and select option 2.

PTO/SB/81 (01-09)
Approved for use through 11/30/2011. OMB 0651-0035
U.S. Patent and Trademark Office; U.S. DEPARTMENT OF COMMERCE
Under the Paperwork Reduction Act of 1995, no persons are required to respond to a collection of information unless it displays a valid OMB control number.

POWER OF ATTORNEY OR REVOCATION OF POWER OF ATTORNEY WITH A NEW POWER OF ATTORNEY AND CHANGE OF CORRESPONDENCE ADDRESS

Application Number	12/512,968
Filing Date	July 30, 2009
First Named Inventor	Alexander I. Soto et al.
Title	SYSTEM AND METHOD FOR PERFORMING HIGH-SPEED
Art Unit	
Examiner Name	
Attorney Docket Number	UBI-002C

I hereby revoke all previous powers of attorney given in the above-identified application.

☐ A Power of Attorney is submitted herewith.

OR

☐ I hereby appoint Practitioner(s) associated with the following Customer Number as my/our attorney(s) or agent(s) to prosecute the application identified above, and to transact all business in the United States Patent and Trademark Office connected therewith:

OR

☐ I hereby appoint Practitioner(s) named below as my/our attorney(s) or agent(s) to prosecute the application identified above, and to transact all business in the United States Patent and Trademark Office connected therewith:

Practitioner(s) Name	Registration Number

Please recognize or change the correspondence address for the above-identified application to:

☐ The address associated with the above-mentioned Customer Number.

OR

☒ The address associated with Customer Number: 93749

OR

☐ Firm or Individual Name					
Address					
City		State		Zip	
Country					
Telephone		Email			

I am the:

☒ Applicant/Inventor.

OR

☐ Assignee of record of the entire interest. See 37 CFR 3.71.
Statement under 37 CFR 3.73(b) (Form PTO/SB/96) submitted herewith or filed on _____

SIGNATURE of Applicant or Assignee of Record

Signature	Alexander Soto	Date	04/24/2010
Name	Alexander Soto	Telephone	619-574-8607
Title and Company			

NOTE: Signatures of all the inventors or assignees of record of the entire interest or their representative(s) are required. Submit multiple forms if more than one signature is required, see below*.

☒ *Total of 2 forms are submitted.

This collection of information is required by 37 CFR 1.31, 1.32 and 1.33. The information is required to obtain or retain a benefit by the public which is to file (and by the USPTO to process) an application. Confidentiality is governed by 35 U.S.C. 122 and 37 CFR 1.11 and 1.14. This collection is estimated to take 3 minutes to complete, including gathering, preparing, and submitting the completed application form to the USPTO. Time will vary depending upon the individual case. Any comments on the amount of time you require to complete this form and/or suggestions for reducing this burden, should be sent to the Chief Information Officer, U.S. Patent and Trademark Office, U.S. Department of Commerce, P.O. Box 1450, Alexandria, VA 22313-1450. DO NOT SEND FEES OR COMPLETED FORMS TO THIS ADDRESS. SEND TO: **Commissioner for Patents, P.O. Box 1450, Alexandria, VA 22313-1450.**

If you need assistance in completing the form, call 1-800-PTO-9199 and select option 2.

Electronic Acknowledgement Receipt

EFS ID:	7509323
Application Number:	12512968
International Application Number:	
Confirmation Number:	6685
Title of Invention:	SYSTEM AND METHOD FOR PERFORMING HIGH-SPEED COMMUNICATIONS OVER FIBER OPTICAL NETWORKS
First Named Inventor/Applicant Name:	Alexander I. Soto
Customer Number:	50625
Filer:	James Albert Ward
Filer Authorized By:	
Attorney Docket Number:	UBI-002C
Receipt Date:	28-APR-2010
Filing Date:	30-JUL-2009
Time Stamp:	17:15:45
Application Type:	Utility under 35 USC 111(a)

Payment information:

Submitted with Payment	no

File Listing:

Document Number	Document Description	File Name	File Size(Bytes)/ Message Digest	Multi Part /.zip	Pages (if appl.)
1	Power of Attorney	New_POA_UBI-002C_27Apr10_.pdf	1087944 e3c4934179bae8f1c8ff4c55e7cc96267e36c50e	no	2

Warnings:

Information:

Total Files Size (in bytes):	1087944

This Acknowledgement Receipt evidences receipt on the noted date by the USPTO of the indicated documents, characterized by the applicant, and including page counts, where applicable. It serves as evidence of receipt similar to a Post Card, as described in MPEP 503.

New Applications Under 35 U.S.C. 111
If a new application is being filed and the application includes the necessary components for a filing date (see 37 CFR 1.53(b)-(d) and MPEP 506), a Filing Receipt (37 CFR 1.54) will be issued in due course and the date shown on this Acknowledgement Receipt will establish the filing date of the application.

National Stage of an International Application under 35 U.S.C. 371
If a timely submission to enter the national stage of an international application is compliant with the conditions of 35 U.S.C. 371 and other applicable requirements a Form PCT/DO/EO/903 indicating acceptance of the application as a national stage submission under 35 U.S.C. 371 will be issued in addition to the Filing Receipt, in due course.

New International Application Filed with the USPTO as a Receiving Office
If a new international application is being filed and the international application includes the necessary components for an international filing date (see PCT Article 11 and MPEP 1810), a Notification of the International Application Number and of the International Filing Date (Form PCT/RO/105) will be issued in due course, subject to prescriptions concerning national security, and the date shown on this Acknowledgement Receipt will establish the international filing date of the application.

UNITED STATES PATENT AND TRADEMARK OFFICE

UNITED STATES DEPARTMENT OF COMMERCE
United States Patent and Trademark Office
Address: COMMISSIONER FOR PATENTS
P.O. Box 1450
Alexandria, Virginia 22313-1450
www.uspto.gov

APPLICATION NUMBER	FILING or 371(c) DATE	GRP ART UNIT	FIL FEE REC'D	ATTY.DOCKET.NO	TOT CLAIMS	IND CLAIMS
12/512,968	07/30/2009	2819	488	UBI-002C	21	3

CONFIRMATION NO. 6685

UPDATED FILING RECEIPT

50625
JAMES ALBERT WARD
6924 CAMINO PACHECO
SAN DIEGO, CA 92111

OC000000040591346

Date Mailed: 03/15/2010

Receipt is acknowledged of this non-provisional patent application. The application will be taken up for examination in due course. Applicant will be notified as to the results of the examination. Any correspondence concerning the application must include the following identification information: the U.S. APPLICATION NUMBER, FILING DATE, NAME OF APPLICANT, and TITLE OF INVENTION. Fees transmitted by check or draft are subject to collection. Please verify the accuracy of the data presented on this receipt. **If an error is noted on this Filing Receipt, please submit a written request for a Filing Receipt Correction. Please provide a copy of this Filing Receipt with the changes noted thereon. If you received a "Notice to File Missing Parts" for this application, please submit any corrections to this Filing Receipt with your reply to the Notice. When the USPTO processes the reply to the Notice, the USPTO will generate another Filing Receipt incorporating the requested corrections**

Applicant(s)

Alexander I. Soto, San Diego, CA;
Walter G. Soto, San Clemente, CA;

Power of Attorney: The patent practitioners associated with Customer Number 50625

Domestic Priority data as claimed by applicant

This application is a CIP of 11/772,187 06/30/2007 ABN
which is a CON of 10/865,547 06/10/2004 PAT 7,242,868
which claims benefit of 60/477,845 06/10/2003
and claims benefit of 60/480,488 06/21/2003

Foreign Applications

If Required, Foreign Filing License Granted: 08/12/2009

The country code and number of your priority application, to be used for filing abroad under the Paris Convention, is **US 12/512,968**

Projected Publication Date: 06/24/2010

Non-Publication Request: No

Early Publication Request: No
**** SMALL ENTITY ****

Title

SYSTEM AND METHOD FOR PERFORMING HIGH-SPEED COMMUNICATIONS OVER FIBER OPTICAL NETWORKS

Preliminary Class

341

PROTECTING YOUR INVENTION OUTSIDE THE UNITED STATES

Since the rights granted by a U.S. patent extend only throughout the territory of the United States and have no effect in a foreign country, an inventor who wishes patent protection in another country must apply for a patent in a specific country or in regional patent offices. Applicants may wish to consider the filing of an international application under the Patent Cooperation Treaty (PCT). An international (PCT) application generally has the same effect as a regular national patent application in each PCT-member country. The PCT process **simplifies** the filing of patent applications on the same invention in member countries, but **does not result** in a grant of "an international patent" and does not eliminate the need of applicants to file additional documents and fees in countries where patent protection is desired.

Almost every country has its own patent law, and a person desiring a patent in a particular country must make an application for patent in that country in accordance with its particular laws. Since the laws of many countries differ in various respects from the patent law of the United States, applicants are advised to seek guidance from specific foreign countries to ensure that patent rights are not lost prematurely.

Applicants also are advised that in the case of inventions made in the United States, the Director of the USPTO must issue a license before applicants can apply for a patent in a foreign country. The filing of a U.S. patent application serves as a request for a foreign filing license. The application's filing receipt contains further information and guidance as to the status of applicant's license for foreign filing.

Applicants may wish to consult the USPTO booklet, "General Information Concerning Patents" (specifically, the section entitled "Treaties and Foreign Patents") for more information on timeframes and deadlines for filing foreign patent applications. The guide is available either by contacting the USPTO Contact Center at 800-786-9199, or it can be viewed on the USPTO website at http://www.uspto.gov/web/offices/pac/doc/general/index.html.

For information on preventing theft of your intellectual property (patents, trademarks and copyrights), you may wish to consult the U.S. Government website, http://www.stopfakes.gov. Part of a Department of Commerce initiative, this website includes self-help "toolkits" giving innovators guidance on how to protect intellectual property in specific countries such as China, Korea and Mexico. For questions regarding patent enforcement issues, applicants may call the U.S. Government hotline at 1-866-999-HALT (1-866-999-4158).

LICENSE FOR FOREIGN FILING UNDER

Title 35, United States Code, Section 184

Title 37, Code of Federal Regulations, 5.11 & 5.15

GRANTED

The applicant has been granted a license under 35 U.S.C. 184, if the phrase "IF REQUIRED, FOREIGN FILING LICENSE GRANTED" followed by a date appears on this form. Such licenses are issued in all applications where

the conditions for issuance of a license have been met, regardless of whether or not a license may be required as set forth in 37 CFR 5.15. The scope and limitations of this license are set forth in 37 CFR 5.15(a) unless an earlier license has been issued under 37 CFR 5.15(b). The license is subject to revocation upon written notification. The date indicated is the effective date of the license, unless an earlier license of similar scope has been granted under 37 CFR 5.13 or 5.14.

This license is to be retained by the licensee and may be used at any time on or after the effective date thereof unless it is revoked. This license is automatically transferred to any related applications(s) filed under 37 CFR 1.53(d). This license is not retroactive.

The grant of a license does not in any way lessen the responsibility of a licensee for the security of the subject matter as imposed by any Government contract or the provisions of existing laws relating to espionage and the national security or the export of technical data. Licensees should apprise themselves of current regulations especially with respect to certain countries, of other agencies, particularly the Office of Defense Trade Controls, Department of State (with respect to Arms, Munitions and Implements of War (22 CFR 121-128)); the Bureau of Industry and Security, Department of Commerce (15 CFR parts 730-774); the Office of Foreign AssetsControl, Department of Treasury (31 CFR Parts 500+) and the Department of Energy.

NOT GRANTED

No license under 35 U.S.C. 184 has been granted at this time, if the phrase "IF REQUIRED, FOREIGN FILING LICENSE GRANTED" DOES NOT appear on this form. Applicant may still petition for a license under 37 CFR 5.12, if a license is desired before the expiration of 6 months from the filing date of the application. If 6 months has lapsed from the filing date of this application and the licensee has not received any indication of a secrecy order under 35 U.S.C. 181, the licensee may foreign file the application pursuant to 37 CFR 5.15(b).

UNITED STATES PATENT AND TRADEMARK OFFICE

UNITED STATES DEPARTMENT OF COMMERCE
United States Patent and Trademark Office
Address: COMMISSIONER FOR PATENTS
P.O. Box 1450
Alexandria, Virginia 22313-1450
www.uspto.gov

APPLICATION NUMBER	FILING OR 371(C) DATE	FIRST NAMED APPLICANT	ATTY. DOCKET NO./TITLE
12/512,968	07/30/2009	Alexander I. Soto	UBI-002C

CONFIRMATION NO. 6685

POA ACCEPTANCE LETTER

50625
JAMES ALBERT WARD
6924 CAMINO PACHECO
SAN DIEGO, CA 92111

OC000000037733203

Date Mailed: 09/15/2009

NOTICE OF ACCEPTANCE OF POWER OF ATTORNEY

This is in response to the Power of Attorney filed 09/01/2009.

The Power of Attorney in this application is accepted. Correspondence in this application will be mailed to the above address as provided by 37 CFR 1.33.

/vvan/

Office of Data Management, Application Assistance Unit (571) 272-4000, or (571) 272-4200, or 1-888-786-0101

Electronic Patent Application Fee Transmittal

Application Number:	12512968
Filing Date:	30-Jul-2009
Title of Invention:	SYSTEM AND METHOD FOR PERFORMING HIGH-SPEED COMMUNICATIONS OVER FIBER OPTICAL NETWORKS
First Named Inventor/Applicant Name:	Alexander I. Soto
Filer:	James Albert Ward
Attorney Docket Number:	UBI-002C

Filed as Small Entity

Utility under 35 USC 111(a) Filing Fees

Description	Fee Code	Quantity	Amount	Sub-Total in USD($)
Basic Filing:				
Pages:				
Claims:				
Claims in excess of 20	2202	1	26	26
Miscellaneous-Filing:				
Petition:				
Patent-Appeals-and-Interference:				
Post-Allowance-and-Post-Issuance:				
Extension-of-Time:				

Description	Fee Code	Quantity	Amount	Sub-Total in USD($)
Miscellaneous:				
			Total in USD ($)	**26**

Electronic Acknowledgement Receipt

EFS ID:	5991574
Application Number:	12512968
International Application Number:	
Confirmation Number:	6685
Title of Invention:	SYSTEM AND METHOD FOR PERFORMING HIGH-SPEED COMMUNICATIONS OVER FIBER OPTICAL NETWORKS
First Named Inventor/Applicant Name:	Alexander I. Soto
Customer Number:	50625
Filer:	James Albert Ward
Filer Authorized By:	
Attorney Docket Number:	UBI-002C
Receipt Date:	01-SEP-2009
Filing Date:	30-JUL-2009
Time Stamp:	13:01:23
Application Type:	Utility under 35 USC 111(a)

Payment information:

Submitted with Payment	yes
Payment Type	Credit Card
Payment was successfully received in RAM	$26
RAM confirmation Number	9238
Deposit Account	
Authorized User	

File Listing:

Document Number	Document Description	File Name	File Size(Bytes)/ Message Digest	Multi Part /.zip	Pages (if appl.)

1	Fee Worksheet (PTO-875)	fee-info.pdf	30462 338c792213835a8cb73eb550039cf3939bfbadff6	no	2
Warnings:					
Information:					
			Total Files Size (in bytes):	30462	

This Acknowledgement Receipt evidences receipt on the noted date by the USPTO of the indicated documents, characterized by the applicant, and including page counts, where applicable. It serves as evidence of receipt similar to a Post Card, as described in MPEP 503.

New Applications Under 35 U.S.C. 111
If a new application is being filed and the application includes the necessary components for a filing date (see 37 CFR 1.53(b)-(d) and MPEP 506), a Filing Receipt (37 CFR 1.54) will be issued in due course and the date shown on this Acknowledgement Receipt will establish the filing date of the application.

National Stage of an International Application under 35 U.S.C. 371
If a timely submission to enter the national stage of an international application is compliant with the conditions of 35 U.S.C. 371 and other applicable requirements a Form PCT/DO/EO/903 indicating acceptance of the application as a national stage submission under 35 U.S.C. 371 will be issued in addition to the Filing Receipt, in due course.

New International Application Filed with the USPTO as a Receiving Office
If a new international application is being filed and the international application includes the necessary components for an international filing date (see PCT Article 11 and MPEP 1810), a Notification of the International Application Number and of the International Filing Date (Form PCT/RO/105) will be issued in due course, subject to prescriptions concerning national security, and the date shown on this Acknowledgement Receipt will establish the international filing date of the application.

PTO/SB/81 (01-09)
Approved for use through 11/30/2011. OMB 0651-0035
U.S. Patent and Trademark Office; U.S. DEPARTMENT OF COMMERCE
Under the Paperwork Reduction Act of 1995, no persons are required to respond to a collection of information unless it displays a valid OMB control number.

POWER OF ATTORNEY OR REVOCATION OF POWER OF ATTORNEY WITH A NEW POWER OF ATTORNEY AND CHANGE OF CORRESPONDENCE ADDRESS

Application Number	12/512,968
Filing Date	07/30/2009
First Named Inventor	Alexander I. Soto
Title	System And Method For Perf...
Art Unit	2619
Examiner Name	
Attorney Docket Number	UBI-002C

I hereby revoke all previous powers of attorney given in the above-identified application.

☐ A Power of Attorney is submitted herewith.

OR

☒ I hereby appoint Practitioner(s) associated with the following Customer Number as my/our attorney(s) or agent(s) to prosecute the application identified above, and to transact all business in the United States Patent and Trademark Office connected therewith: **50,625**

OR

☐ I hereby appoint Practitioner(s) named below as my/our attorney(s) or agent(s) to prosecute the application identified above, and to transact all business in the United States Patent and Trademark Office connected therewith:

Practitioner(s) Name	Registration Number

Please recognize or change the correspondence address for the above-identified application to:

☒ The address associated with the above-mentioned Customer Number.

OR

☐ The address associated with Customer Number:

OR

☐ Firm or Individual Name					
Address					
City		State		Zip	
Country					
Telephone		Email			

I am the:

☒ Applicant/Inventor.

OR

☐ Assignee of record of the entire interest. See 37 CFR 3.71.
Statement under 37 CFR 3.73(b) (Form PTO/SB/96) submitted herewith or filed on _____

SIGNATURE of Applicant or Assignee of Record

Signature	Walter Soto	Date	8/30/2009
Name	Walter Soto	Telephone	949-218-8839
Title and Company			

NOTE: Signatures of all the inventors or assignees of record of the entire interest or their representative(s) are required. Submit multiple forms if more than one signature is required, see below*.

☒ *Total of 1 forms are submitted.

This collection of information is required by 37 CFR 1.31, 1.32 and 1.33. The information is required to obtain or retain a benefit by the public which is to file (and by the USPTO to process) an application. Confidentiality is governed by 35 U.S.C. 122 and 37 CFR 1.11 and 1.14. This collection is estimated to take 3 minutes to complete, including gathering, preparing, and submitting the completed application form to the USPTO. Time will vary depending upon the individual case. Any comments on the amount of time you require to complete this form and/or suggestions for reducing this burden, should be sent to the Chief Information Officer, U.S. Patent and Trademark Office, U.S. Department of Commerce, P.O. Box 1450, Alexandria, VA 22313-1450. DO NOT SEND FEES OR COMPLETED FORMS TO THIS ADDRESS. SEND TO: **Commissioner for Patents, P.O. Box 1450, Alexandria, VA 22313-1450.**

If you need assistance in completing the form, call 1-800-PTO-9199 and select option 2.

Electronic Acknowledgement Receipt

EFS ID:	5991771
Application Number:	12512968
International Application Number:	
Confirmation Number:	6685
Title of Invention:	SYSTEM AND METHOD FOR PERFORMING HIGH-SPEED COMMUNICATIONS OVER FIBER OPTICAL NETWORKS
First Named Inventor/Applicant Name:	Alexander I. Soto
Customer Number:	50625
Filer:	James Albert Ward
Filer Authorized By:	
Attorney Docket Number:	UBI-002C
Receipt Date:	01-SEP-2009
Filing Date:	30-JUL-2009
Time Stamp:	13:17:47
Application Type:	Utility under 35 USC 111(a)

Payment information:

Submitted with Payment	no

File Listing:

Document Number	Document Description	File Name	File Size(Bytes)/ Message Digest	Multi Part /.zip	Pages (if appl.)
1	Power of Attorney	POA_UBI-002C_30Aug09_signed.pdf	63458 9b9bf9bc7eee54549fc00006d78d285eb4c7dc3d	no	1

Warnings:

Information:

Total Files Size (in bytes):	63458

This Acknowledgement Receipt evidences receipt on the noted date by the USPTO of the indicated documents, characterized by the applicant, and including page counts, where applicable. It serves as evidence of receipt similar to a Post Card, as described in MPEP 503.

New Applications Under 35 U.S.C. 111
If a new application is being filed and the application includes the necessary components for a filing date (see 37 CFR 1.53(b)-(d) and MPEP 506), a Filing Receipt (37 CFR 1.54) will be issued in due course and the date shown on this Acknowledgement Receipt will establish the filing date of the application.

National Stage of an International Application under 35 U.S.C. 371
If a timely submission to enter the national stage of an international application is compliant with the conditions of 35 U.S.C. 371 and other applicable requirements a Form PCT/DO/EO/903 indicating acceptance of the application as a national stage submission under 35 U.S.C. 371 will be issued in addition to the Filing Receipt, in due course.

New International Application Filed with the USPTO as a Receiving Office
If a new international application is being filed and the international application includes the necessary components for an international filing date (see PCT Article 11 and MPEP 1810), a Notification of the International Application Number and of the International Filing Date (Form PCT/RO/105) will be issued in due course, subject to prescriptions concerning national security, and the date shown on this Acknowledgement Receipt will establish the international filing date of the application.

UNITED STATES PATENT AND TRADEMARK OFFICE

UNITED STATES DEPARTMENT OF COMMERCE
United States Patent and Trademark Office
Address: COMMISSIONER FOR PATENTS
P.O. Box 1450
Alexandria, Virginia 22313-1450
www.uspto.gov

APPLICATION NUMBER	FILING OR 371(C) DATE	FIRST NAMED APPLICANT	ATTY. DOCKET NO./TITLE
12/512,968	07/30/2009	Alexander I. Soto	UBI-002C

CONFIRMATION NO. 6685

FORMALITIES LETTER

50625
JAMES ALBERT WARD
6924 CAMINO PACHECO
SAN DIEGO, CA 92111

OC000000037320288

Date Mailed: 08/18/2009

NOTICE TO FILE MISSING PARTS OF NONPROVISIONAL APPLICATION

FILED UNDER 37 CFR 1.53(b)

Filing Date Granted

Items Required To Avoid Abandonment:

An application number and filing date have been accorded to this application. The item(s) indicated below, however, are missing. Applicant is given TWO MONTHS from the date of this Notice within which to file all required items and pay any fees required below to avoid abandonment. Extensions of time may be obtained by filing a petition accompanied by the extension fee under the provisions of 37 CFR 1.136(a).

- Additional claim fees of $**26** as a small entity, including any required multiple dependent claim fee, are required. Applicant must submit the additional claim fees or cancel the additional claims for which fees are due.

SUMMARY OF FEES DUE:

Total additional fee(s) required for this application is $**26** for a small entity
- Total additional claim fee(s) for this application is $**26**
  - $**26** for **1** total claims over 20.

Replies should be mailed to:

Mail Stop Missing Parts
Commissioner for Patents
P.O. Box 1450
Alexandria VA 22313-1450

Registered users of EFS-Web may alternatively submit their reply to this notice via EFS-Web.
https://sportal.uspto.gov/authenticate/AuthenticateUserLocalEPF.html

For more information about EFS-Web please call the USPTO Electronic Business Center at **1-866-217-9197** or visit our website at http://www.uspto.gov/ebc.

If you are not using EFS-Web to submit your reply, you must include a copy of this notice.

/rnegga/

Office of Data Management, Application Assistance Unit (571) 272-4000, or (571) 272-4200, or 1-888-786-0101

UNITED STATES PATENT AND TRADEMARK OFFICE

UNITED STATES DEPARTMENT OF COMMERCE
United States Patent and Trademark Office
Address: COMMISSIONER FOR PATENTS
P.O. Box 1450
Alexandria, Virginia 22313-1450
www.uspto.gov

APPLICATION NUMBER	FILING or 371(c) DATE	GRP ART UNIT	FIL FEE REC'D	ATTY.DOCKET.NO	TOT CLAIMS	IND CLAIMS
12/512,968	07/30/2009	2819	462	UBI-002C	21	3

CONFIRMATION NO. 6685

50625
JAMES ALBERT WARD
6924 CAMINO PACHECO
SAN DIEGO, CA 92111

FILING RECEIPT

OC000000037320287

Date Mailed: 08/18/2009

Receipt is acknowledged of this non-provisional patent application. The application will be taken up for examination in due course. Applicant will be notified as to the results of the examination. Any correspondence concerning the application must include the following identification information: the U.S. APPLICATION NUMBER, FILING DATE, NAME OF APPLICANT, and TITLE OF INVENTION. Fees transmitted by check or draft are subject to collection. Please verify the accuracy of the data presented on this receipt. **If an error is noted on this Filing Receipt, please submit a written request for a Filing Receipt Correction. Please provide a copy of this Filing Receipt with the changes noted thereon. If you received a "Notice to File Missing Parts" for this application, please submit any corrections to this Filing Receipt with your reply to the Notice. When the USPTO processes the reply to the Notice, the USPTO will generate another Filing Receipt incorporating the requested corrections**

Applicant(s)

Alexander I. Soto, San Diego, CA;
Walter G. Soto, San Clemente, CA;

Power of Attorney: None

Domestic Priority data as claimed by applicant

This application is a CIP of 11/772,187 06/30/2007
which is a CON of 10/865,547 06/10/2004 PAT 7,242,868
which claims benefit of 60/477,845 06/10/2003
and claims benefit of 60/480,488 06/21/2003

Foreign Applications

If Required, Foreign Filing License Granted: 08/12/2009

The country code and number of your priority application, to be used for filing abroad under the Paris Convention, is **US 12/512,968**

Projected Publication Date: Supplemental Fees Missing

Non-Publication Request: No

Early Publication Request: No
**** SMALL ENTITY ****

Title

SYSTEM AND METHOD FOR PERFORMING HIGH-SPEED COMMUNICATIONS OVER FIBER OPTICAL NETWORKS

Preliminary Class

341

PROTECTING YOUR INVENTION OUTSIDE THE UNITED STATES

Since the rights granted by a U.S. patent extend only throughout the territory of the United States and have no effect in a foreign country, an inventor who wishes patent protection in another country must apply for a patent in a specific country or in regional patent offices. Applicants may wish to consider the filing of an international application under the Patent Cooperation Treaty (PCT). An international (PCT) application generally has the same effect as a regular national patent application in each PCT-member country. The PCT process **simplifies** the filing of patent applications on the same invention in member countries, but **does not result** in a grant of "an international patent" and does not eliminate the need of applicants to file additional documents and fees in countries where patent protection is desired.

Almost every country has its own patent law, and a person desiring a patent in a particular country must make an application for patent in that country in accordance with its particular laws. Since the laws of many countries differ in various respects from the patent law of the United States, applicants are advised to seek guidance from specific foreign countries to ensure that patent rights are not lost prematurely.

Applicants also are advised that in the case of inventions made in the United States, the Director of the USPTO must issue a license before applicants can apply for a patent in a foreign country. The filing of a U.S. patent application serves as a request for a foreign filing license. The application's filing receipt contains further information and guidance as to the status of applicant's license for foreign filing.

Applicants may wish to consult the USPTO booklet, "General Information Concerning Patents" (specifically, the section entitled "Treaties and Foreign Patents") for more information on timeframes and deadlines for filing foreign patent applications. The guide is available either by contacting the USPTO Contact Center at 800-786-9199, or it can be viewed on the USPTO website at http://www.uspto.gov/web/offices/pac/doc/general/index.html.

For information on preventing theft of your intellectual property (patents, trademarks and copyrights), you may wish to consult the U.S. Government website, http://www.stopfakes.gov. Part of a Department of Commerce initiative, this website includes self-help "toolkits" giving innovators guidance on how to protect intellectual property in specific countries such as China, Korea and Mexico. For questions regarding patent enforcement issues, applicants may call the U.S. Government hotline at 1-866-999-HALT (1-866-999-4158).

LICENSE FOR FOREIGN FILING UNDER

Title 35, United States Code, Section 184

Title 37, Code of Federal Regulations, 5.11 & 5.15

GRANTED

The applicant has been granted a license under 35 U.S.C. 184, if the phrase "IF REQUIRED, FOREIGN FILING LICENSE GRANTED" followed by a date appears on this form. Such licenses are issued in all applications where

the conditions for issuance of a license have been met, regardless of whether or not a license may be required as set forth in 37 CFR 5.15. The scope and limitations of this license are set forth in 37 CFR 5.15(a) unless an earlier license has been issued under 37 CFR 5.15(b). The license is subject to revocation upon written notification. The date indicated is the effective date of the license, unless an earlier license of similar scope has been granted under 37 CFR 5.13 or 5.14.

This license is to be retained by the licensee and may be used at any time on or after the effective date thereof unless it is revoked. This license is automatically transferred to any related applications(s) filed under 37 CFR 1.53(d). This license is not retroactive.

The grant of a license does not in any way lessen the responsibility of a licensee for the security of the subject matter as imposed by any Government contract or the provisions of existing laws relating to espionage and the national security or the export of technical data. Licensees should apprise themselves of current regulations especially with respect to certain countries, of other agencies, particularly the Office of Defense Trade Controls, Department of State (with respect to Arms, Munitions and Implements of War (22 CFR 121-128)); the Bureau of Industry and Security, Department of Commerce (15 CFR parts 730-774); the Office of Foreign AssetsControl, Department of Treasury (31 CFR Parts 500+) and the Department of Energy.

NOT GRANTED

No license under 35 U.S.C. 184 has been granted at this time, if the phrase "IF REQUIRED, FOREIGN FILING LICENSE GRANTED" DOES NOT appear on this form. Applicant may still petition for a license under 37 CFR 5.12, if a license is desired before the expiration of 6 months from the filing date of the application. If 6 months has lapsed from the filing date of this application and the licensee has not received any indication of a secrecy order under 35 U.S.C. 181, the licensee may foreign file the application pursuant to 37 CFR 5.15(b).

UNITED STATES PATENT AND TRADEMARK OFFICE

UNITED STATES DEPARTMENT OF COMMERCE
United States Patent and Trademark Office
Address: COMMISSIONER FOR PATENTS
P.O. Box 1450
Alexandria, Virginia 22313-1450
www.uspto.gov

APPLICATION NUMBER	FILING OR 371(C) DATE	FIRST NAMED APPLICANT	ATTY. DOCKET NO./TITLE
12/512,968	07/30/2009	Alexander I. Soto	UBI-002C

CONFIRMATION NO. 6685

IMPROPER CPOA LETTER

50625
JAMES ALBERT WARD
6924 CAMINO PACHECO
SAN DIEGO, CA 92111

OC000000037320386

Date Mailed: 08/18/2009

NOTICE REGARDING POWER OF ATTORNEY

This is in response to the Power of Attorney filed 07/30/2009. The Power of Attorney in this application is not accepted for the reason(s) listed below:

- The signature(s) of Walter G. Soto, a co-inventor in this application, has been omitted. The Power of Attorney will be entered upon receipt of confirmation signed by said co-inventor.

/ytamerat/

Office of Data Management, Application Assistance Unit (571) 272-4000, or (571) 272-4200, or 1-888-786-0101

PTO/SB/05 (06-07)
Approved for use through 06/30/2007. OMB 0651-0032
U.S. Patent and Trademark Office. U.S. DEPARTMENT OF COMMERCE
Under the Paperwork Reduction Act of 1995, no persons are required to respond to a collection of information unless it displays a valid OMB control number.

UTILITY PATENT APPLICATION TRANSMITTAL

(Only for new nonprovisional applications under 37 CFR 1.53(b))

Attorney Docket No.	UBI-002C
First Inventor	Soto, Alexander I. et al.
Title	SYSTEM AND METHOD FOR PERFORMIN
Express Mail Label No.	N/A

APPLICATION ELEMENTS

See MPEP chapter 600 concerning utility patent application contents.

ADDRESS TO: **Commissioner for Patents**
P.O. Box 1450
Alexandria VA 22313-1450

1. ☐ **Fee Transmittal Form** (e.g., PTO/SB/17)
   (Submit an original and a duplicate for fee processing)
2. ☑ **Applicant claims small entity status**. See 37 CFR 1.27.
3. ☑ **Specification** [*Total Pages* 30]
   Both the claims and abstract must start on a new page
   (For information on the preferred arrangement, see MPEP 608.01(a))
4. ☑ **Drawing(s)** (*35 U.S.C. 113*) [*Total Sheets* 9]
5. **Oath or Declaration** [*Total Sheets* 1]
   a. ☑ Newly executed (original or copy)
   b. ☐ A copy from a prior application (37 CFR 1.63(d))
   (for continuation/divisional with Box 18 completed)
   i. ☐ DELETION OF INVENTOR(S)
   Signed statement attached deleting inventor(s) name in the prior application, see 37 CFR 1.63(d)(2) and 1.33(b).
6. ☑ **Application Data Sheet.** See 37 CFR 1.76
7. ☐ **CD-ROM or CD-R** in duplicate, large table or Computer Program *(Appendix)*
   ☐ Landscape Table on CD
8. **Nucleotide and/or Amino Acid Sequence Submission** *(if applicable, items a. – c. are required)*
   a. ☐ Computer Readable Form (CRF)
   b. Specification Sequence Listing on:
   i. ☐ CD-ROM or CD-R (2 copies); or
   ii. ☐ Paper
   c. ☐ Statements verifying identity of above copies

ACCOMPANYING APPLICATION PARTS

9. ☐ **Assignment Papers** (cover sheet & document(s))
   Name of Assignee_____
10. ☐ **37 CFR 3.73(b) Statement** *(when there is an assignee)* ☑ **Power of Attorney**
11. ☐ **English Translation Document** *(if applicable)*
12. ☑ **Information Disclosure Statement** (PTO/SB/08 or PTO-1449)
    ☐ Copies of citations attached
13. ☐ **Preliminary Amendment**
14. ☐ **Return Receipt Postcard** (MPEP 503)
    (*Should be specifically itemized)*
15. ☐ **Certified Copy of Priority Document(s)**
    (if foreign priority is claimed)
16. ☐ **Nonpublication Request** under 35 U.S.C. 122(b)(2)(B)(i). Applicant must attach form PTO/SB/35 or equivalent.
17. ☐ Other:_____

18. If a CONTINUING APPLICATION, *check appropriate box, and supply the requisite information below and in the first sentence of the specification following the title, or in an Application Data Sheet under 37 CFR 1.76:*

☐ Continuation ☐ Divisional ☑ Continuation-in-part (CIP) of prior application No.: 11/772,187

Prior application information: *Examiner* Phan, Hanh *Art Unit:* 2613

19. CORRESPONDENCE ADDRESS

☑ The address associated with Customer Number: 50,625 ***OR*** ☐ Correspondence address below

Name					
Address					
City		State		Zip Code	
Country		Telephone		Email	

Signature	/James Albert Ward #34014/	Date	July 30, 2009
Name (Print/Type)	James Albert Ward	Registration No. (Attorney/Agent)	34,041

This collection of information is required by 37 CFR 1.53(b). The information is required to obtain or retain a benefit by the public which is to file (and by the USPTO to process) an application. Confidentiality is governed by 35 U.S.C. 122 and 37 CFR 1.11 and 1.14. This collection is estimated to take 12 minutes to complete, including gathering, preparing, and submitting the completed application form to the USPTO. Time will vary depending upon the individual case. Any comments on the amount of time you require to complete this form and/or suggestions for reducing this burden, should be sent to the Chief Information Officer, U.S. Patent and Trademark Office, U.S. Department of Commerce, P.O. Box 1450, Alexandria, VA 22313-1450. DO NOT SEND FEES OR COMPLETED FORMS TO THIS ADDRESS. **SEND TO: Commissioner for Patents, P.O. Box 1450, Alexandria, VA 22313-1450.**
If you need assistance in completing the form, call 1-800-PTO-9199 and select option 2.

What is claimed is:

1. An optical transceiver module of an Optical Line Terminal in a passive optical network for transmitting continuous mode optical data signals on a first wavelength according to an m-ary modulation format and to equalize an optical data channel responsive to a received burst mode optical data signal on a second wavelength over a fiber optic cable, the optical transceiver module further comprising:

   a modulator configured to generate according to an m-ary modulation method a first m-ary modulation signal representative of a first binary data signal input to the optical transceiver module;

   a driver electrically coupled to the modulator configured to amplify the first m-ary modulation signal in order to drive an optical transmitter;

   an optical transmitter electrically coupled to the driver configured to emit the optical continuous mode signal on the first wavelength on the fiber optic cable representative of the amplified first m-ary modulation signal;

   an optical detector configured to receive the burst mode optical signal on the second wavelength from the fiber optic cable and generate a representative second electrical signal;

   an amplifier electrically coupled to the optical detector and configured to amplify the second electrical signal to facilitate clock and data recovery;

   a clock data recovery and equalization unit electrically coupled to the amplifier and configured to equalize a burst mode channel, recover clock data timing and to generate a second m-ary modulation signal; and

   a de-modulator electrically coupled to the clock data recovery and equalization unit and configured to generate a second binary data output signal representative of the second m-ary modulation signal.

2. The optical transceiver module of claim 1, wherein the form factor of the optical transceiver module is selected from the group consisting essentially of: SFP; SFP+; XFP; X2; XENPAK; XPA; and 300 pin transceiver form factors.

3. The optical transceiver module of claim 1, wherein the m-ary modulation method is selected from the group essentially consisting of:

quadrature amplitude modulation (QAM);
QAM-32;
QAM-256;
quadrature phase shift keying (QPSK);
differential QPSK;
return-to-zero QPSK;
dual-polarized QPSK;
orthogonal frequency division multiplexing (OFDM);
pulse amplitude modulation (PAM);
PAM-5; and
PAM-17;

4. The optical transceiver module of claim 1, wherein equalizing routine employed by the equalizer is selected from the group consisting of: a blind equalization routine which does not use a known training sequence and decision-directed equalization routine using a known training sequence.

5. The optical transceiver module of claim 4, wherein the known training sequence of a decision-directed equalization routine is multiplexed in a frame of the received burst mode optical signal.

6. The optical transceiver module of claim 1, further comprising:

means for storing a first set of determined settings which improve processing of received burst mode data from a first client on the passive optical network associated with a first optical channel;

means for loading a predetermined second set of settings which improve prove processing of received burst mode data from a second client on the passive optical network associated with a second optical channel prior to processing received burst mode data from the second client.

7. The optical transceiver module of claim 1, further comprising:

an encoder coupled electrically to the input of the modulator and configured to encode the first binary data signal input as input to the modulator with a method

designed to improve the energy per bit required to deliver the data transmitted by the optical transceiver module; and

a decoder coupled electrically to the output of the demodulator and configured to decode the second binary data output signal and correct for errors.

8. The optical transceiver module of claim 7, wherein the encoder or decoder method is selected from the group essentially consisting of: Reed-Solomon coding; trellis coding; Low-density parity-check coding, and Turbo coding.

9. The optical transceiver module of claim 1, wherein the passive optical network is a coarse wavelength-division multiplexing (CWDM) or dense wavelength-division multiplexing (DWDM) passive optical network and an M number of wavelengths are transmitted and an N number of wavelengths are received over the fiber optic cable, the optical transceiver module further comprising:

an M number of modulators coupled respectively to an M number of drivers coupled respectively to an M number of optical transmitters such that a respective M number of optical m-ary modulated signals are transmitted over the fiber optic cable; and

an N number of optical detectors coupled respectively to an N number of amplifiers coupled respectively to an N number of clock and data recovery units coupled respectively to an N number of equalizers coupled to an N number of de-modulators such that a respective N number of binary modulated electrical signals are generated responsive to an N number of received optical data signals received over the fiber optic cable.

10. An optical transceiver module of an Optical Network Unit or Optical Network Terminal in a passive optical network for transmitting burst mode optical data signals on a first wavelength according to an m-ary modulation format and to equalize an optical data channel responsive to a received continuous mode optical data signal on a second wavelength over a fiber optic cable, the optical transceiver module further comprising:

a modulator configured to generate according to an m-ary modulation method a first m-ary modulation signal representative of a first binary data signal input to the optical transceiver module;

a driver electrically coupled to the modulator configured to amplify the first m-ary modulation signal in order to drive an optical transmitter;

an optical transmitter electrically coupled to the driver configured to emit the burst mode optical signal on the first wavelength on the fiber optic cable representative of the amplified first m-ary modulation signal;

an optical detector configured to receive the continuous mode optical signal on the second wavelength from the fiber optic cable and generate a representative second electrical signal;

an amplifier electrically coupled to the optical detector and configured to amplify the second electrical signal to facilitate clock and data recovery;

a clock data recovery and equalization unit electrically coupled to the amplifier and configured to equalize a continuous mode channel, recover clock data timing and to generate a second m-ary modulation signal; and

a de-modulator electrically coupled to the clock data recovery and equalization unit and configured to generate a second binary data output signal representative of the second m-ary modulation signal.

11. The optical transceiver module of claim 10, wherein the form factor of the optical transceiver module is selected from the group consisting essentially of: SFP; SFP+; XFP; X2; XENPAK; XPA; and 300 pin transceiver form factors.

12. The optical transceiver module of claim 10, wherein the m-ary modulation method is selected from the group essentially consisting of:

quadrature amplitude modulation (QAM);

QAM-32;

QAM-256;

quadrature phase shift keying (QPSK);

differential QPSK;

return-to-zero QPSK;

dual-polarized QPSK;
orthogonal frequency division multiplexing (OFDM);
pulse amplitude modulation (PAM);
PAM-5; and
PAM-17.

13. The optical transceiver module of claim 10, wherein equalizing routine employed by the equalizer is selected from the group consisting of: a blind equalization routine which does not use a known training sequence and decision-directed equalization routine using a known training sequence.

14. The optical transceiver module of claim 13, wherein the known training sequence of a decision-directed equalization routine is multiplexed in a frame of the received continuous mode optical signal.

15. The optical transceiver module of claim 13, further comprising:

an encoder coupled electrically to the input of the modulator and configured to encode the first binary data signal input as input to the modulator with a method designed to improve the energy per bit required to deliver the data transmitted by the optical transceiver module; and

a decoder coupled electrically to the output of the demodulator and configured to decode the second binary data output signal and correct for errors.

16. The optical transceiver module of claim 15, wherein the encoder or decoder method is selected from the group essentially consisting of: Reed-Solomon coding; trellis coding; Low-density parity-check coding, and Turbo coding.

17. The optical transceiver module of claim 10, wherein the passive optical network is a coarse wavelength-division multiplexing (CWDM) or dense wavelength division multiplexing (DWDM) passive optical network and an M number of wavelengths are transmitted and an N number of wavelengths are received over the fiber optic cable, the optical transceiver module further comprising:

an M number of modulators coupled respectively to an M number of drivers coupled respectively to an M number of optical transmitters such that a respective M number of optical m-ary modulated signals are transmitted over the fiber optic cable; and

an N number of optical detectors coupled respectively to an N number of amplifiers coupled respectively to an N number of clock and data recovery units coupled respectively to an N number of equalizers coupled to an N number of de-modulators such that a respective N number of binary modulated electrical signals are generated responsive to an N number of received optical data signals received over the fiber optic cable.

18. In a passive optical network having an Optical Line Terminal (OLT), or an Optical Network Unit (ONU) or an Optical Network Terminal (ONT) with an optical transceiver module having an optical transmitter for transmitting communications on a first wavelength and an optical detector for receiving communications on a second wavelength, a method for m-ary modulation communication across the passive optical network generated from within the optical transceiver module comprising the steps of:

(a) modulating a first binary signal input to the optical transceiver module according to an m-ary modulation method to produce a first m-ary modulation signal;

(b) amplifying the first m-ary modulation signal to drive the optical transmitter;

(c) emitting an optical signal on the first wavelength representative of the amplified first m-ary modulation signal from the optical transmitter into an optical fiber;

(d) receiving an optical signal on the second wavelength from the optical fiber and producing an electrical signal from the optical detector;

(e) amplifying the electrical signal to facilitate clock and data recovery;

(f) equalizing the amplified electrical signal and recovering clock data information to produce a second m-ary modulation signal; and

(g) demodulating the second m-ary modulation signal to produce a second binary output signal.

whereby m-ary modulation communication is performed within the optical transceiver module of an OLT, ONU or an ONT of a passive optical network.

19. The method of claim 18, whereby the form factor of the optical transceiver module is selected from the group consisting essentially of: SFP; SFP+; XFP; X2; XENPAK; XPA; and 300 pin transceiver form factors.

20. The method of claim 18, whereby the m-ary modulation method is selected from the group consisting essentially of :

quadrature amplitude modulation (QAM);
QAM-32;
QAM-256;
quadrature phase shift keying (QPSK);
differential QPSK;
return-to-zero QPSK;
dual-polarized QPSK;
orthogonal frequency division multiplexing (OFDM);
pulse amplitude modulation (PAM);
PAM-5; and
PAM-17.

21. The method of claim 18, further comprising the steps of:

(h) storing at the OLT a first set of determined settings which improve processing of received burst mode data from a first ONU or ONT on the passive optical network associated with a first optical channel; and

(i) loading at the OLT a predetermined second set of settings which improve processing of received burst mode data from a second ONU or ONT on the passive optical network associated with a second optical channel prior to processing received burst mode data from the second ONU or ONT.

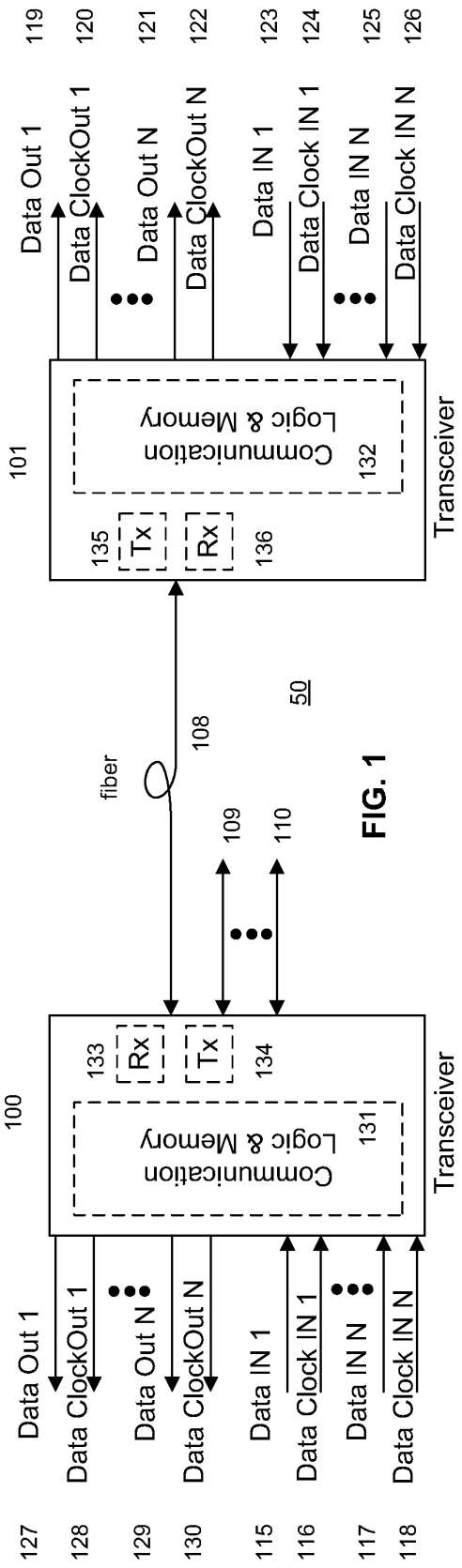
Data Out 1
Data ClockOut 1
Data Out N
Data ClockOut N
Data IN 1
Data Clock IN 1
Data IN N
Data Clock IN N
Communication Logic & Memory
Tx
Rx
Transceiver
fiber
100
101
108
109
110
115
116
117
118
119
120
121
122
123
124
125
126
127
128
129
130
131
132
133
134
135
136
50

FIG. 1

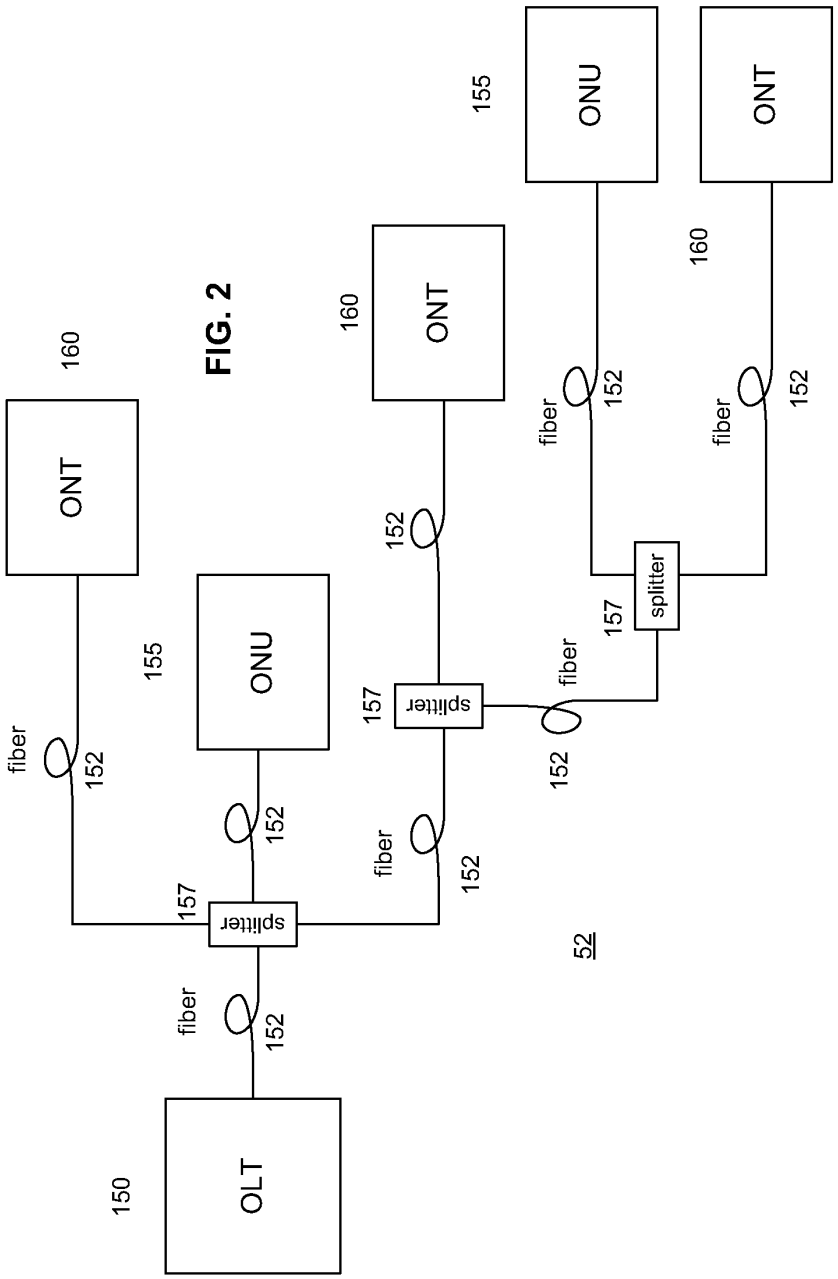
OLT
ONT
ONU
splitter
fiber
150
152
155
157
160
52

FIG. 2

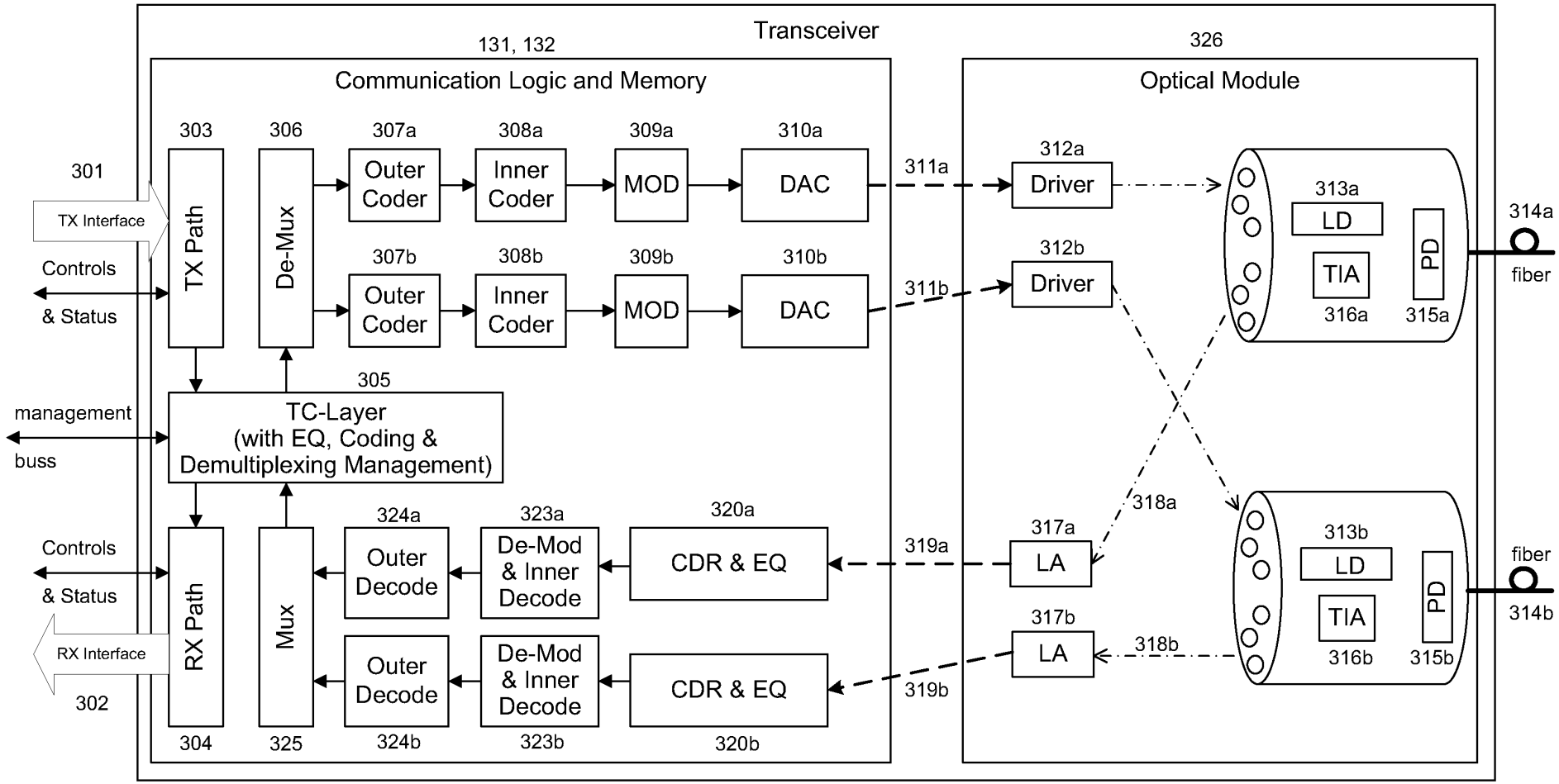
Transceiver
131, 132
Communication Logic and Memory
326
Optical Module
301
TX Interface
Controls
& Status
303
TX Path
306
De-Mux
307a
Outer Coder
308a
Inner Coder
309a
MOD
310a
DAC
307b
Outer Coder
308b
Inner Coder
309b
MOD
310b
DAC
311a
311b
312a
Driver
312b
Driver
313a
LD
TIA
316a
PD
315a
314a
fiber
management
buss
305
TC-Layer
(with EQ, Coding &
Demultiplexing Management)
318a
Controls
& Status
RX Interface
302
RX Path
304
Mux
325
324a
Outer Decode
323a
De-Mod
& Inner
Decode
320a
CDR & EQ
319a
317a
LA
317b
LA
318b
319b
324b
Outer Decode
323b
De-Mod
& Inner
Decode
320b
CDR & EQ
313b
LD
TIA
316b
PD
315b
fiber
314b

FIG. 3

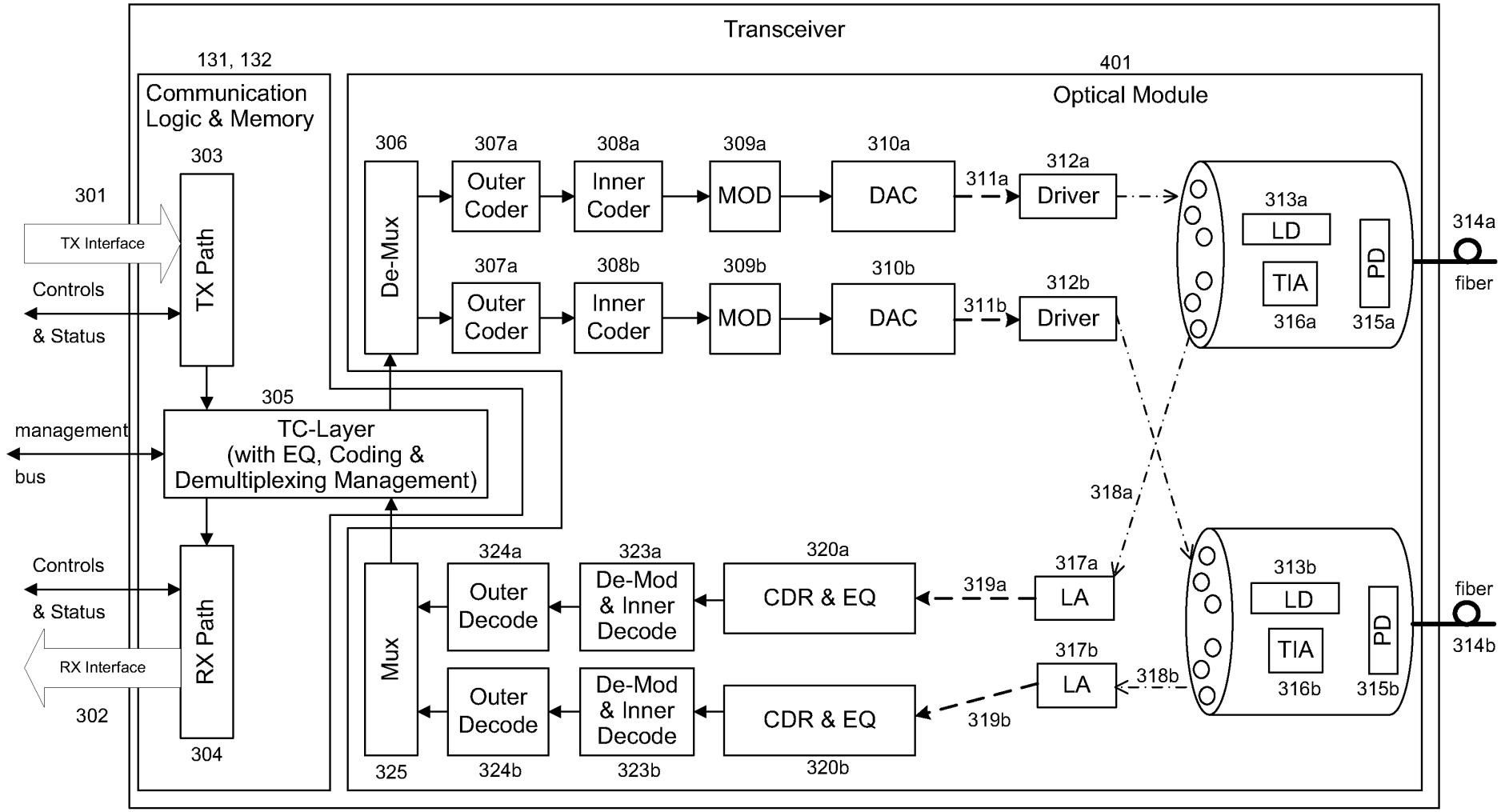
Transceiver
131, 132
Communication Logic & Memory
401
Optical Module
301
TX Interface
Controls & Status
303
TX Path
305
TC-Layer (with EQ, Coding & Demultiplexing Management)
management bus
Controls & Status
RX Interface
302
RX Path
304
306
De-Mux
307a
Outer Coder
308a
Inner Coder
309a
MOD
310a
DAC
311a
312a
Driver
307a
Outer Coder
308b
Inner Coder
309b
MOD
310b
DAC
311b
312b
Driver
313a
LD
TIA
316a
PD
315a
314a
fiber
318a
313b
LD
TIA
316b
PD
315b
fiber
314b
325
Mux
324a
Outer Decode
323a
De-Mod & Inner Decode
320a
CDR & EQ
319a
317a
LA
317b
LA
318b
319b
324b
Outer Decode
323b
De-Mod & Inner Decode
320b
CDR & EQ

FIG. 4

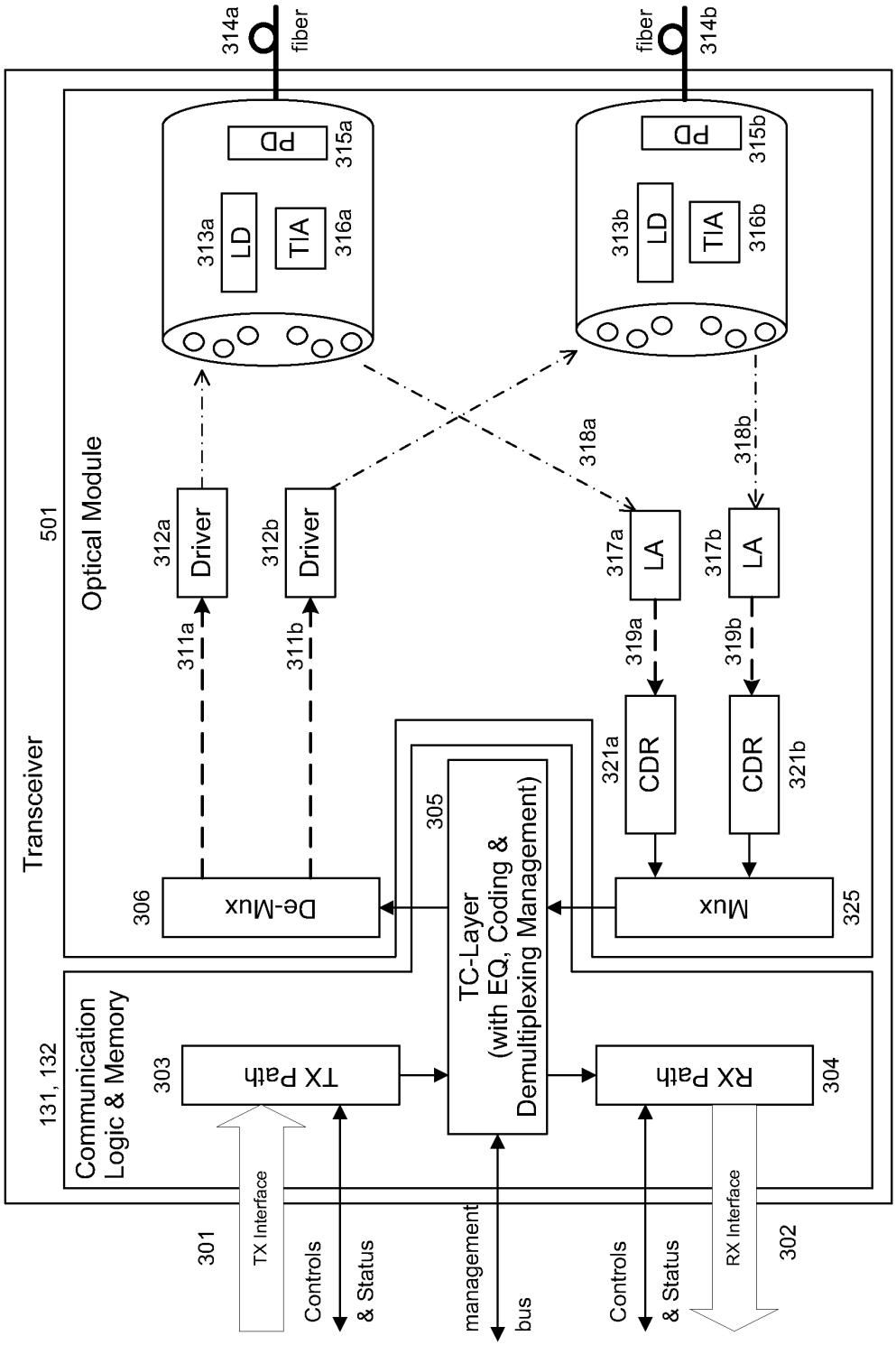
Transceiver
501
Optical Module
131, 132
Communication Logic & Memory
301
TX Interface
303
TX Path
Controls
& Status
management
bus
TC-Layer
(with EQ, Coding &
Demultiplexing Management)
305
Controls
& Status
RX Path
304
RX Interface
302
306
De-Mux
Mux
325
311a
311b
312a
Driver
312b
Driver
313a
LD
TIA
316a
PD
315a
313b
LD
TIA
316b
PD
315b
314a
fiber
fiber
314b
318a
318b
317a
LA
317b
LA
319a
319b
321a
CDR
CDR
321b

FIG. 5

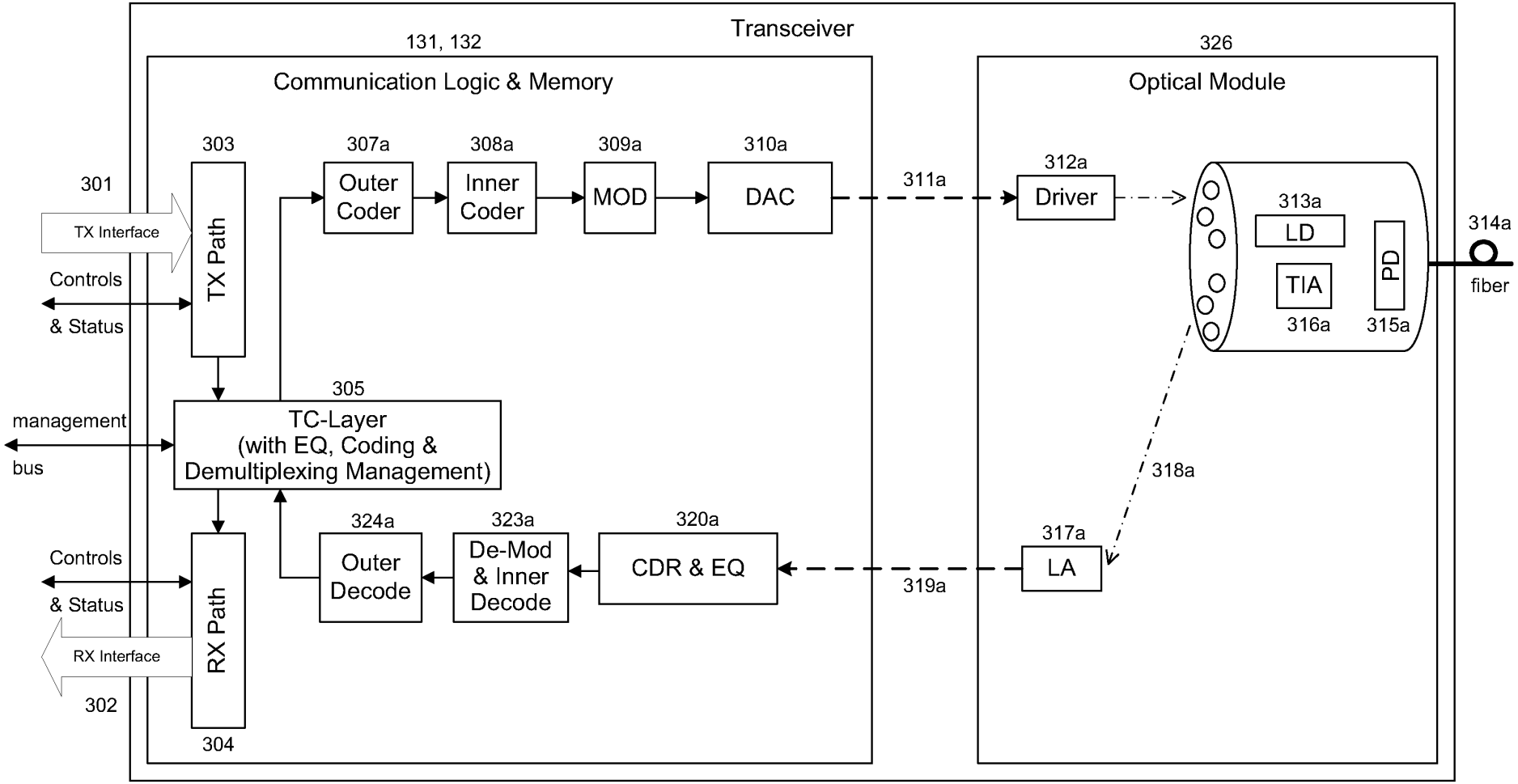
Transceiver
131, 132
Communication Logic & Memory
326
Optical Module
301
TX Interface
Controls
& Status
303
TX Path
307a
Outer
Coder
308a
Inner
Coder
309a
MOD
310a
DAC
311a
312a
Driver
313a
LD
TIA
316a
PD
315a
314a
fiber
305
management
bus
TC-Layer
(with EQ, Coding &
Demultiplexing Management)
318a
Controls
& Status
RX Interface
302
RX Path
304
324a
Outer
Decode
323a
De-Mod
& Inner
Decode
320a
CDR & EQ
319a
317a
LA

FIG. 6A

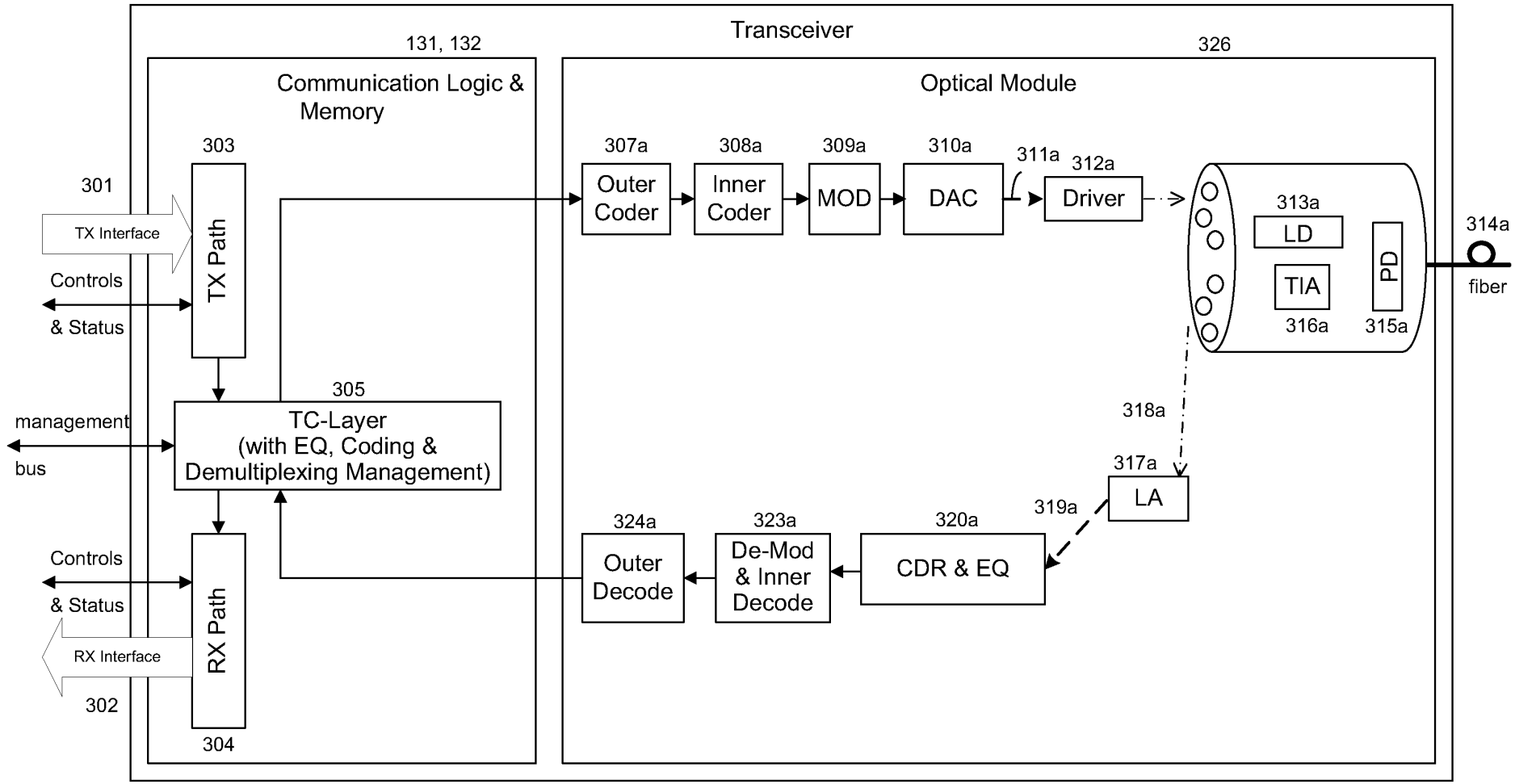
Transceiver
131, 132
Communication Logic & Memory
326
Optical Module
301
TX Interface
Controls
& Status
303
TX Path
305
TC-Layer
(with EQ, Coding &
Demultiplexing Management)
management
bus
Controls
& Status
RX Interface
302
RX Path
304
307a
Outer Coder
308a
Inner Coder
309a
MOD
310a
DAC
311a
312a
Driver
313a
LD
TIA
316a
PD
315a
314a
fiber
318a
317a
LA
319a
320a
CDR & EQ
323a
De-Mod & Inner Decode
324a
Outer Decode

FIG. 6B

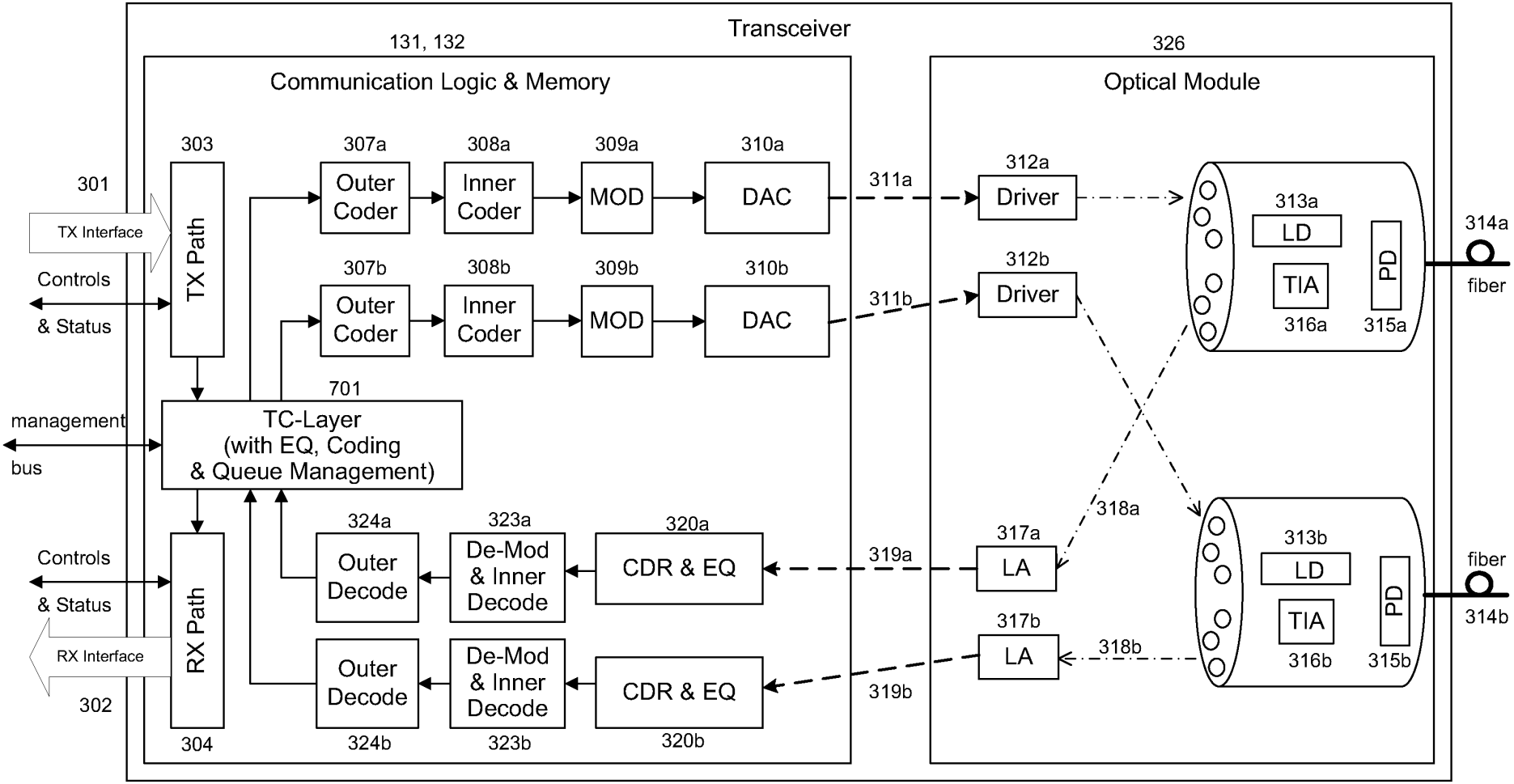
Transceiver
131, 132
Communication Logic & Memory
326
Optical Module
301
TX Interface
Controls
& Status
303
TX Path
307a
Outer Coder
308a
Inner Coder
309a
MOD
310a
DAC
307b
Outer Coder
308b
Inner Coder
309b
MOD
310b
DAC
311a
311b
312a
Driver
312b
Driver
313a
LD
TIA
316a
PD
315a
314a
fiber
management
bus
701
TC-Layer
(with EQ, Coding
& Queue Management)
318a
Controls
& Status
RX Interface
302
RX Path
304
324a
Outer Decode
323a
De-Mod
& Inner
Decode
320a
CDR & EQ
319a
317a
LA
313b
LD
TIA
316b
PD
315b
fiber
314b
317b
LA
318b
319b
Outer Decode
324b
De-Mod
& Inner
Decode
323b
CDR & EQ
320b

FIG. 7

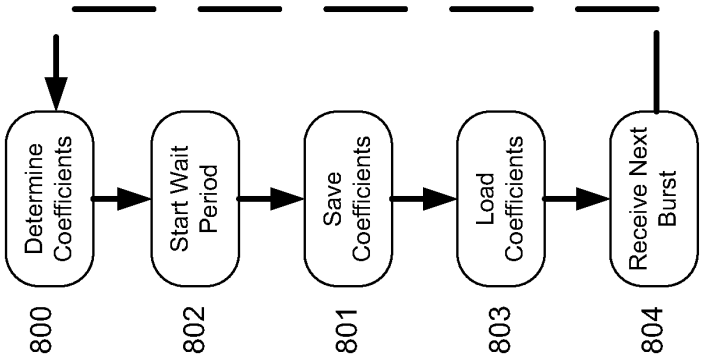
Determine Coefficients
800
Start Wait Period
802
Save Coefficients
801
Load Coefficients
803
Receive Next Burst
804

FIG. 8B

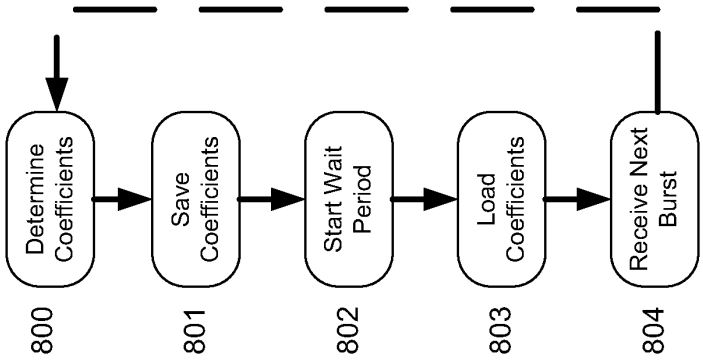
Determine Coefficients
800
Save Coefficients
801
Start Wait Period
802
Load Coefficients
803
Receive Next Burst
804

FIG. 8A

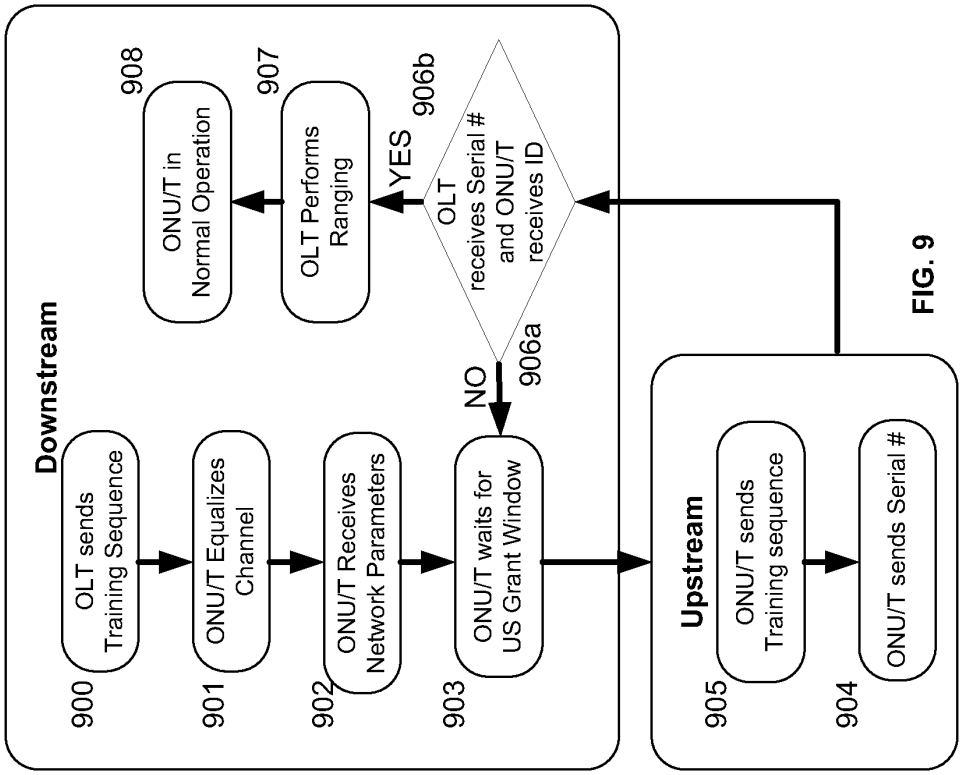
Downstream
900
OLT sends Training Sequence
901
ONU/T Equalizes Channel
902
ONU/T Receives Network Parameters
903
ONU/T waits for US Grant Window
906a
NO
906b
OLT receives Serial # and ONU/T receives ID
YES
907
OLT Performs Ranging
908
ONU/T in Normal Operation
Upstream
905
ONU/T sends Training sequence
904
ONU/T sends Serial #

FIG. 9

PTO/SB/08a (07-09)
Approved for use through 07/31/2012. OMB 0651-0031
U.S. Patent and Trademark Office; U.S. DEPARTMENT OF COMMERCE
Under the Paperwork Reduction Act of 1995, no persons are required to respond to a collection of information unless it contains a valid OMB control number.

Substitute for form 1449/PTO

INFORMATION DISCLOSURE STATEMENT BY APPLICANT

(Use as many sheets as necessary)

Sheet 1 of 1

Complete if Known	
Application Number	
Filing Date	July 28, 2009
First Named Inventor	Soto, et al.
Art Unit	
Examiner Name	
Attorney Docket Number	UBI-002C

U. S. PATENT DOCUMENTS

Examiner Initials*	Cite No.[1]	Document Number Number-Kind Code[2] (if known)	Publication Date MM-DD-YYYY	Name of Patentee or Applicant of Cited Document	Pages, Columns, Lines, Where Relevant Passages or Relevant Figures Appear
	1	US- 5150247	09-22-1992	Sharpe et al.	
	2	US- 6950477	09-27-2005	Meehan et al.	
	3	US- 6067319	05-23-2000	Copeland, Gregory Clark	
	4	US- 5363408	11-08-1994	Paik et al.	
	5	US- 5880863	03-09-1999	Rideout et al.	
	6	US- 6490727	12-03-2002	Strolle et al.	
	7	US- 7242868	07-10-2007	Soto et al.	
	8	US- 20080166124	07-10-2008	Soto et al.	
		US-			
		US-			
		US-			
		US-			
		US-			
		US-			
		US-			
		US-			
		US-			
		US-			
		US-			

FOREIGN PATENT DOCUMENTS

Examiner Initials*	Cite No.[1]	Foreign Patent Document Country Code[3]-Number[4]-Kind Code[5] (if known)	Publication Date MM-DD-YYYY	Name of Patentee or Applicant of Cited Document	Pages, Columns, Lines, Where Relevant Passages Or Relevant Figures Appear	T[6]

Examiner Signature		Date Considered	

*EXAMINER: Initial if reference considered, whether or not citation is in conformance with MPEP 609. Draw line through citation if not in conformance and not considered. Include copy of this form with next communication to applicant. [1] Applicant's unique citation designation number (optional). [2] See Kinds Codes of USPTO Patent Documents at www.uspto.gov or MPEP 901.04. [3] Enter Office that issued the document, by the two-letter code (WIPO Standard ST.3). [4] For Japanese patent documents, the indication of the year of the reign of the Emperor must precede the serial number of the patent document. [5] Kind of document by the appropriate symbols as indicated on the document under WIPO Standard ST.16 if possible. [6] Applicant is to place a check mark here if English language Translation is attached.

This collection of information is required by 37 CFR 1.97 and 1.98. The information is required to obtain or retain a benefit by the public which is to file (and by the USPTO to process) an application. Confidentiality is governed by 35 U.S.C. 122 and 37 CFR 1.14. This collection is estimated to take 2 hours to complete, including gathering, preparing, and submitting the completed application form to the USPTO. Time will vary depending upon the individual case. Any comments on the amount of time you require to complete this form and/or suggestions for reducing this burden, should be sent to the Chief Information Officer, U.S. Patent and Trademark Office, P.O. Box 1450, Alexandria, VA 22313-1450. DO NOT SEND FEES OR COMPLETED FORMS TO THIS ADDRESS. **SEND TO: Commissioner for Patents, P.O. Box 1450, Alexandria, VA 22313-1450.**

If you need assistance in completing the form, call 1-800-PTO-9199 (1-800-786-9199) and select option 2.

PTO/SB/08b (07-09)
Approved for use through 07/31/2012. OMB 0651-0031
U.S. Patent and Trademark Office; U.S. DEPARTMENT OF COMMERCE
Under the Paperwork Reduction Act of 1995, no persons are required to respond to a collection of information unless it contains a valid OMB control number.

Substitute for form 1449/PTO

INFORMATION DISCLOSURE STATEMENT BY APPLICANT

(Use as many sheets as necessary)

Sheet	1	of	1

Complete if Known	
Application Number	
Filing Date	July 28, 2009
First Named Inventor	Soto, et al.
Art Unit	
Examiner Name	
Attorney Docket Number	UBI-002C

NON PATENT LITERATURE DOCUMENTS

Examiner Initials*	Cite No.[1]	Include name of the author (in CAPITAL LETTERS), title of the article (when appropriate), title of the item (book, magazine, journal, serial, symposium, catalog, etc.), date, page(s), volume-issue number(s), publisher, city and/or country where published.	T[2]
	1	Delavaux, et al., "QAM-PON and Super PON for Access Distribution Networks", 2000	

Examiner Signature		Date Considered	

*EXAMINER: Initial if reference considered, whether or not citation is in conformance with MPEP 609. Draw line through citation if not in conformance and not considered. Include copy of this form with next communication to applicant.
1 Applicant's unique citation designation number (optional). 2 Applicant is to place a check mark here if English language Translation is attached.
This collection of information is required by 37 CFR 1.98. The information is required to obtain or retain a benefit by the public which is to file (and by the USPTO to process) an application. Confidentiality is governed by 35 U.S.C. 122 and 37 CFR 1.14. This collection is estimated to take 2 hours to complete, including gathering, preparing, and submitting the completed application form to the USPTO. Time will vary depending upon the individual case. Any comments on the amount of time you require to complete this form and/or suggestions for reducing this burden, should be sent to the Chief Information Officer, U.S. Patent and Trademark Office, P.O. Box 1450, Alexandria, VA 22313-1450. DO NOT SEND FEES OR COMPLETED FORMS TO THIS ADDRESS. **SEND TO: Commissioner for Patents, P.O. Box 1450, Alexandria, VA 22313-1450.**

If you need assistance in completing the form, call 1-800-PTO-9199 (1-800-786-9199) and select option 2.

PTO/SB/81 (01-09)
Approved for use through 11/30/2011. OMB 0651-0035
U.S. Patent and Trademark Office; U.S. DEPARTMENT OF COMMERCE
Under the Paperwork Reduction Act of 1995, no persons are required to respond to a collection of information unless it displays a valid OMB control number.

POWER OF ATTORNEY OR REVOCATION OF POWER OF ATTORNEY WITH A NEW POWER OF ATTORNEY AND CHANGE OF CORRESPONDENCE ADDRESS

Application Number	
Filing Date	July 27, 2009
First Named Inventor	Soto, et al.
Title	System And Method For Perfo..
Art Unit	
Examiner Name	
Attorney Docket Number	UBI-002C

I hereby revoke all previous powers of attorney given in the above-identified application.

☐ A Power of Attorney is submitted herewith.

OR

☒ I hereby appoint Practitioner(s) associated with the following Customer Number as my/our attorney(s) or agent(s) to prosecute the application identified above, and to transact all business in the United States Patent and Trademark Office connected therewith: 50,625

OR

☐ I hereby appoint Practitioner(s) named below as my/our attorney(s) or agent(s) to prosecute the application identified above, and to transact all business in the United States Patent and Trademark Office connected therewith:

Practitioner(s) Name	Registration Number

Please recognize or change the correspondence address for the above-identified application to:

☒ The address associated with the above-mentioned Customer Number.

OR

☐ The address associated with Customer Number:

OR

☐ Firm or Individual Name					
Address					
City		State		Zip	
Country					
Telephone		Email			

I am the:

☒ Applicant/Inventor.

OR

☐ Assignee of record of the entire interest. See 37 CFR 3.71.
Statement under 37 CFR 3.73(b) (Form PTO/SB/96) submitted herewith or filed on _____.

SIGNATURE of Applicant or Assignee of Record

Signature		Date	7/28/2009
Name	Alexander Soto	Telephone	619-574-8607
Title and Company			

NOTE: Signatures of all the inventors or assignees of record of the entire interest or their representative(s) are required. Submit multiple forms if more than one signature is required, see below*.

☒ *Total of 1 forms are submitted.

This collection of information is required by 37 CFR 1.31, 1.32 and 1.33. The information is required to obtain or retain a benefit by the public which is to file (and by the USPTO to process) an application. Confidentiality is governed by 35 U.S.C. 122 and 37 CFR 1.11 and 1.14. This collection is estimated to take 3 minutes to complete, including gathering, preparing, and submitting the completed application form to the USPTO. Time will vary depending upon the individual case. Any comments on the amount of time you require to complete this form and/or suggestions for reducing this burden, should be sent to the Chief Information Officer, U.S. Patent and Trademark Office, U.S. Department of Commerce, P.O. Box 1450, Alexandria, VA 22313-1450. DO NOT SEND FEES OR COMPLETED FORMS TO THIS ADDRESS. SEND TO: **Commissioner for Patents, P.O. Box 1450, Alexandria, VA 22313-1450.**

If you need assistance in completing the form, call 1-800-PTO-9199 and select option 2.

SYSTEM AND METHOD FOR PERFORMING HIGH-SPEED COMMUNICATIONS OVER FIBER OPTICAL NETWORKS

CROSS-REFERENCE TO RELATED APPLICATIONS

[001] This application is filed as a 37 C.F.R. 1.53(b)(2) continuation-in-part of the commonly-assigned U.S. Patent Application Ser. No. 11/772,187 filed on June 30, 2007, which claims benefit of commonly-assigned U.S. Patent Application Ser. No. 10/865,547 filed on June 10, 2004, now U.S. Pat. No. 7,242,868, which claims the benefit of U.S. Provisional Application No. 60/477,845 filed June 10, 2003, incorporated herein by reference, and U.S. Provisional Application No. 60/480,488 filed June 21, 2003, incorporated herein by reference.

FIELD OF THE INVENTION

[002] The invention relates to optical fiber communications generally, and more specifically to m-ary modulation in optical communication networks.

BACKGROUND OF THE INVENTION

[003] Line coding is a process by which a communication protocol arranges symbols that represent binary data in a particular pattern for transmission. Conventional line coding used in fiber optic communications includes non-return-to-zero (NRZ), return-to-zero (RZ), and biphase, or Manchester. The binary bit stream derived from these line codes can be directly modulated onto wavelengths of light generated by the resonating frequency of a laser. Traditionally direct binary modulation based transmission offers an advantage with regard to the acceptable signal-to-noise ratio (SNR) at the optical receiver, which is one of the reasons direct binary modulation methods are used in the Datacom Ethernet/IP, Storage Fiber-Channel/FC and Telecom SONET/SDH markets for transmission across nonmultiplexed unidirectional fiber links.

[004] The performance of a fiber optic network can be measured by the maximum data throughput rate (or information carrying capacity) and the maximum distance between source and destination achievable (or reach). For Passive Optical Networks

(PONs) in particular, additional measures of performance are the maximum number of Optical Networking Units (ONUs) and/or Optical Networking Terminals (ONTs) possible on a network and the minimum and maximum distance between the Optical Line Terminator (OLT) and an ONU/ONT. These performance metrics are constrained by, among other things, amplitude degradation and temporal distortions as a result of light traveling through an optical fiber.

[005] Amplitude degradation is substantially a function of length or distance between two end points of an optical fiber. Temporal distortion mechanisms include intramodal (chromatic) dispersion and intermodal (modal) dispersion. Intramodal dispersion is the dominant temporal dispersion on Single-mode fiber (SMF), while intermodal dispersion is dominant on Multi-mode fiber (MMF). Both types of temporal distortions are measured as functions of frequency or rate of transmission (also referred as line rate of a communication protocol) over distance in MHz•km. Temporal distortions are greater, hence a constraint on network performance, with increasing frequency transmission.

SUMMARY OF THE INVENTION

[006] In general, in one aspect, the invention includes a method for processing a received optical signal in an optical communication network, the method including: determining a first set of coefficients to equalize a portion of an optical signal received over a first optical link including using a blind equalization method that does not use a known training sequence to equalize the portion of the optical signal, equalizing the portion of the optical signal using the determined coefficients, and demodulating the equalized portion of the optical signal according to an m-ary modulation format.

[007] Aspects of the invention may include one or more of the following features. The method includes determining a second set of coefficients to equalize a portion of an optical signal received over a second optical link. The method includes selecting one of the first or second set of coefficients based on a source of the portion of optical signal being equalized. The portion of the optical signal includes a burst within a time slot of the first optical link. The method includes storing the determined

coefficients. The method includes retrieving the stored coefficients for equalizing a second portion of the optical signal corresponding to a portion received from a same source as generated the first portion of the optical signal. The coefficients are retrieved between signal bursts on the first optical link. The stored coefficients are retrieved for respective portions of the optical signals that correspond to respective signal sources. The first optical link includes a link in a point-to-multipoint passive optical network. The m-ary modulation format is selected from the group consisting of quadrature amplitude modulation, quadrature phase shift keying, orthogonal frequency division multiplexing and pulse amplitude modulation. The method includes demodulating a received first data stream and demodulating a second data stream received in the optical signal, and multiplexing the first and second data streams.

[008] In general, in another aspect, the invention includes optical communication system including: a first transceiver coupled by an optical network to a second transceiver and third transceiver, the first transceiver including an equalization block and a modulation block, the equalization block operable to determine a first set of coefficients to equalize a portion of an optical signal received over the optical network from the second transceiver and a second set of coefficients to equalize a portion of the optical signal received over the optical network from the third transceiver, the equalization block including a blind equalization routine that does not use a known training sequence to equalize the portions of the optical signal, the equalization block operable to equalize the portions of the optical signal using the determined coefficients, and the modulation block operable to demodulate equalized portions of the optical signal according to an m-ary modulation format.

[009] Aspects of the invention may include one or more of the following features. The optical network includes a first optical link for coupling the first and second transceiver, and a second optical link for coupling the first and third transceivers and where the equalization block is operable to select one of the first or second set of coefficients based on a source of the portion of optical signal being equalized. The equalization block is operable to store the first and second sets of coefficients for later retrieval and use to equalize portions of the optical signal. The portion of the optical

signal includes a burst within a time slot on the optical network. The equalization block is operable to retrieve the sets of coefficients between signal bursts on the optical network. The optical network includes a link in a point-to-multipoint passive optical network. The m-ary modulation format is selected from the group consisting of quadrature amplitude modulation, quadrature phase shift keying, orthogonal frequency division multiplexing and pulse amplitude modulation. The system includes a multiplexer, the modulation block operable to demodulating a received first data stream and a second data stream received in the optical signal, and the multiplexer operable to multiplex the first and second data streams. The system includes a transmission convergence layer block for processing data streams received by the first transceiver, the transmission convergence layer block operable to control the demultiplexing of data streams including control of the multiplexer. The optical network is an optical distribution network. The first transceiver is an optical line terminator. The second and third transceivers are optical network terminals or optical network units.

[0010] In general, in another aspect, the invention includes a method for processing data for transmission in an optical communication network, the method including: demultiplexing a data stream into a first demultiplexed data stream and a second demultiplexed data stream, modulating each of the first and second data streams according to an m-ary modulation format, transmitting the first modulated data stream over a first optical link; and transmitting the second modulated data stream over a second optical link.

[0011] In general, in another aspect, the invention includes an optical communication system including: a demultiplexer operable to demultiplex a data stream into a first demultiplexed data stream and a second demultiplexed data stream, a modulation block operable to modulate each of the first and second data streams according to an m-ary modulation format, transmitting means operable to transmit the first modulated data stream over a first optical link and the second modulated data stream over a second optical link.

[0012] In general, in another aspect, the invention includes a method for processing a received optical signal in an optical communication network, the method including:

equalizing a received optical signal to provide an equalized signal, demodulating the equalized signal according to an m-ary modulation format to provide a demodulated signal, decoding the demodulated signal according to an inner code to provide an inner-decoded signal, and decoding the inner-decoded signal according to an outer code.

[0013] Aspects of the invention may include one or more of the following features. The m-ary modulation format is selected from the group consisting of quadrature amplitude modulation, quadrature phase shift keying, orthogonal frequency division multiplexing and pulse amplitude modulation. Equalizing the received optical signal includes equalizing the received optical signal using a blind equalization routine that does not use a known training sequence. Equalizing the received optical signal includes equalizing the received optical signal using a known training sequence. The known training sequence is multiplexed in a frame within the received optical signal. The inner code includes a trellis code. The outer code includes an error correction code. The outer code includes a: Reed-Solomon code; trellis code; Low-density parity-check code, or a Turbo code.

[0014] In general, in another aspect, the invention includes a transceiver including: an equalizer for equalizing a received optical signal to provide an equalized signal, a demodulator in communication with the equalizer for demodulating the equalized signal according to an m-ary modulation format to provide a demodulated signal, an inner-decoder in communication with the demodulator for decoding the demodulated signal according to an inner code to provide an inner-decoded signal, and an outer-decoder in communication with the inner-decoder for decoding the inner-decoded signal according to an outer code.

[0015] Aspects of the invention may include one or more of the following features. The transceiver includes an optical module including a first bi-directional optical fiber interface including a first detector and a first driver, and a second bi-directional optical fiber interface including a second detector and a second driver, and management means for managing data flow across the first bi-directional optical fiber interface and across the second bi-directional optical fiber interface. The transceiver includes an optical module including a first bi-directional optical fiber interface

including a first detector and a first driver, and a second bi-directional optical fiber interface including a second detector and a second driver, and a multiplexer for multiplexing a first demultiplexed data stream received over the first bi-directional optical fiber interface and a second demultiplexed data stream received over the second bi-directional optical fiber interface into a multiplexed data stream for transmission. The transceiver includes an optical module including a first bi-directional optical fiber interface including a first detector and a first driver, and a second bi-directional optical fiber interface including a second detector and a second driver, and a queue manager for managing traffic for a first bi-directional link associated with the first bi-directional optical fiber interface independently from traffic for a second bi-directional link associated with the second bi-directional optical fiber interface.

[0016] In general, in another aspect, the invention includes a transceiver including: an optical module including a first bi-directional optical fiber interface including a first detector and a first driver, and a second bi-directional optical fiber interface including a second detector and a second driver, and management means for managing data flow across the first bi-directional optical fiber interface and across the second bi-directional optical fiber interface.

[0017] Aspects of the invention may include one or more of the following features. The management means includes a multiplexer for multiplexing a first demultiplexed data stream received over the first bi-directional optical fiber interface and a second demultiplexed data stream received over the second bi-directional optical fiber interface into a multiplexed data stream for transmission. The management means is configured to demultiplex a data stream over a plurality of fiber links that excludes one or more failed fiber links. The management means includes a queue manager for managing traffic across the first bi-directional fiber interface independently from traffic for the second bi-directional fiber interface. The management means is configured to change the alignment of received data bits to adjust for an order of optical fiber connections to the first bi-directional optical fiber interface and the second bi-directional optical fiber interface.

[0018] In general, in another aspect, the invention includes a method for equalizing an optical channel including: storing channel characteristics for the optical channel associated with a client, loading the stored channel characteristics during a waiting period between bursts on the channel, and equalizing a received burst from the client using the loaded channel characteristics.

[0019] Aspects of the invention may include one or more of the following features. The method includes determining that the waiting period occurs before a burst from the client based on a schedule. The method includes updating the stored channel characteristics. The method includes providing a grant window, transmitting an identification number to the client in response to receiving a serial number from the client after the grant window. The method includes determining a distance from an upstream device to the client. The method includes compensating for communication delays between the upstream device and the client based on the determined distance.

[0020] In general, in another aspect, the invention includes a method for communicating data on a fiber optic network, the method including: modulating and demodulating data traffic on an optical link in the network in an m-ary modulation format; encoding and decoding data traffic on an optical link in the network according to an inner coding routine and an outer coding routine, demultiplexing data traffic from an optical link in the network and transmitting the data traffic across a plurality of optical fiber links in the network, multiplexing the data traffic from the plurality of optical fiber links, and equalizing a receive channel in the network to remove temporal distortions.

[0021] Aspects of the invention may include one or more of the following features. The method includes equalizing the receive channel according to a blind equalization routine. The method includes equalizing the receive channel according to a decision directed equalization routine. The method includes saving and loading coefficients for equalizing the receive channel for each of a plurality of transmitting sources. The method includes conveying a training sequence for a decision directed equalization routine as part of an in-use communication protocol. A training sequence for a decision directed equalization routine is conveyed as part of the activation process for

an optical network terminal or optical network unit. An incorrect connection of an optical fiber link is corrected without having to physically change the connection.

[0022] In general, in another aspect, the invention includes a method for communicating on a passive optical network between a central transmission point and a plurality of receiving client end points, the method including: preparing downstream data for transmission and transmitting an optical downstream continuous mode signal demultiplexed across a plurality of bi-directional fibers using a plurality of wavelengths of light, receiving an optical downstream continuous mode signal demultiplexed from the plurality of bi-directional fibers using the plurality of wavelengths of light and recovering a downstream data transmission, preparing upstream data for transmission and transmitting an optical upstream burst mode signal demultiplexed across the plurality of bi-directional fibers using the plurality of wavelengthss of light, and receiving an optical burst mode signal demultiplexed from the plurality of bi-directional fibers using the plurality of wavelengths of light and recovering an upstream data transmission.

[0023] Aspects of the invention may include one or more of the following features. The central transmission point includes an optical line terminal, and the end points are operative as transceivers in a passive optical network. The upstream and downstream data for transmission are conveyed by respective different industry-standard services.

[0024] Implementations of the invention may include one or more of the following advantages.

[0025] A system is proposed that provides for high-speed communications over fiber optic networks. The system may include the use of the one or more of the following techniques either individually or in combination: m-ary modulation; channel equalization; demultiplexing across multiple fibers, coding and error correction. M-ary modulation allows for increased data throughput for a given line rate due to an increase in the number of bits per symbol transmitted. Channel equalization reduces the effects of temporal distortions allowing for increased reach. Demultiplexing across multiple fibers allows lower lines rates for a given data throughput rate due to the increased aggregate data throughput from the multiplexing. Coding and error correction allows for a greater selection of qualifying optical components that can be

used in the network and complements m-ary modulation and channel equalization for overall system performance improvement as measured by transmit energy per bit. These methods when combined (in part or in total) increase the data throughput and reach for fiber optic networks. For PONs in particular, these methods may increase the number of ONU/ONTs and the distance between OLT and ONU/ONT by decreasing the line rate as compared to a conventional communication system of equivalent data throughput.

BRIEF DESCRIPTION OF THE DRAWINGS

[0026] FIG. 1 illustrates a fiber optic data network.

[0027] FIG. 2 illustrates a block diagram of a passive optical network.

[0028] FIG. 3 illustrates a block diagram of a high-speed communication system for fiber optic networks.

[0029] FIG. 4 illustrates a block diagram of an alternative high-speed communication system for fiber optic networks.

[0030] FIG. 5 illustrates a block diagram of an alternative high-speed communication system for fiber optic networks.

[0031] FIG. 6A illustrates a block diagram of an alternative high-speed communication system for fiber optic networks.

[0032] FIG. 6B illustrates a block diagram of an alternative high-speed communication system for fiber optic networks.

[0033] FIG. 7 illustrates a block diagram of an alternative high-speed communication system for fiber optic networks.

[0034] FIG. 8A illustrates an exemplary flow diagram for upstream burst mode communication processing.

[0035] FIG. 8B illustrates another exemplary flow diagram for upstream burst mode communication processing.

[0036] FIG. 9 illustrates an exemplary flow diagram for a downstream continuous mode communication equalization process.

DETAILED DESCRIPTION

[0037] Referring to **FIG. 1**, wherein like reference numerals designate identical or corresponding parts throughout the several views and embodiments, a high-level fiber optic data network **50** includes a first transceiver **100** in communication with a second transceiver **101** via a fiber **108**. The first transceiver **100** and the second transceiver **101** include transmitter circuitry (Tx) **134, 135** to convert electrical data input signals into modulated light signals for transmission over the fiber **108**. In addition, the first transceiver **100** and the second transceiver **101** also include receiver circuitry (Rx) **133, 136** to convert optical signals received via the fiber **108** into electrical signals and to detect and recover encoded data and/or clock signals. First transceiver **100** and second transceiver **101** may contain a micro controller (not shown) and/or other communication logic and memory **131, 132** for network protocol operation. Although the illustrated and described implementations of the transceivers **100**, **101** include communication logic and memory in a same package or device as the transmitter circuitry **134**, **135** and receiver circuitry **133**, **136**, other transceiver configurations may also be used.

[0038] First transceiver **100** transmits/receives data to/from the second transceiver **101** in the form of modulated optical light signals of known wavelength via the optical fiber **108**. The transmission mode of the data sent over the optical fiber **108** may be continuous, burst or both burst and continuous modes. Both transceivers **100**,**101** may transmit a same wavelength (e.g., the light signals are polarized and the polarization of light transmitted from one of the transceivers is perpendicular to the polarization of the light transmitted by the other transceiver). Alternatively, a single wavelength can be used by both transceivers **100, 101** (e.g., the transmissions can be made in accordance with a time-division multiplexing scheme or similar protocol).

[0039] In another implementation, wavelength-division multiplexing (WDM) may also be used. WDM is herein defined as any technique by which two optical signals having different wavelengths may be simultaneously transmitted bi-directionally with one wavelength used in each direction over a single fiber. In yet another implementation, coarse wavelength-division multiplexing (CWDM) or dense wavelength-division multiplexing (DWDM) may be used. CWDM and DWDM are

herein defined as any technique by which two or more optical signals having different wavelengths are simultaneously transmitted in the same direction. The difference between CWDM and DWDM is CWDM wavelengths are typically spaced 20 nanometers (nm) apart, compared with 0.4 nm spacing for DWDM wavelengths. Both CWDM and DWDM may be used in bi-directional communications. In bi-directional communications, e.g. if wavelength-division multiplexing (WDM) is used, the first transceiver **100** may transmit data to the second transceiver **101** utilizing a first wavelength of modulated light conveyed via the fiber **108** and, similarly, the second transceiver **101** may transmit data via the same fiber **108** to the first transceiver **100** utilizing a second wavelength of modulated light conveyed via the same fiber **108**. Because only a single fiber is used, this type of transmission system is commonly referred to as a bi-directional transmission system. Although the fiber optic network illustrated in **FIG. 1** includes a first transceiver **100** in communication with a second transceiver **101** via a single fiber **108**, other implementations of fiber optic networks, such as those having a first transceiver in communication with a plurality of transceivers via a plurality of fibers (e.g. shown in **FIG. 2**), may also be used.

[0040] Electrical data input signals (Data IN 1) **115**, as well as any optional clock signal (Data Clock IN 1) **116**, are routed to the transceiver **100** from an external data source (not shown) for processing by the communication logic and memory **131**. Communication logic and memory **131** process the data and clock signals in accordance with an in-use network protocol. Communication logic and memory **131,132** provides management functions for received and transmitted data including queue management (e.g., independent link control) for each respective link, demultiplexing/multiplexing and other functions as described further below. The processed signals are transmitted by the transmitter circuitry **134**. The resulting modulated light signals produced from the first transceiver's **100** transmitter **134** are then conveyed to the second transceiver **101** via the fiber **108**. The second transceiver **101,** in turn, receives the modulated light signals via the receiver circuitry **136**, converts the light signals to electrical signals, processes the electrical signals using the communication logic and memory **132** (in accordance with an in-use

network protocol) and, optionally, outputs the electrical data output signals (Data Out 1) **119**, as well as optional clock signals (Data Clock Out 1) **120**.

[0041] Similarly, the second transceiver **101** receives electrical data input signals (Data IN 1) **123**, as well as any optional clock signals (Data Clock IN) **124**, from an external data source (not shown) for processing by the communication logic and memory **132** and transmission by the transmitter circuitry **135**. The resulting modulated light signals produced from the second transceiver's **101** transmitter **135** are then conveyed to the first transceiver **100** using the optical fiber **108**. The first transceiver **100,** in turn, receives the modulated light signals via the receiver circuitry **133**, converts the light signals to electrical signals, processes the electrical signals using the communication logic and memory **131** (in accordance with an in-use network protocol), and, optionally, outputs the electrical data output signals (Data Out 1) **127**, as well as any optional clock signals (Data Clock Out 1) **128**.

[0042] Fiber optic data network **50** may also include a plurality of electrical input and clock input signals, denoted herein as Data IN N **117**/**125** and Data Clock IN N **118**/**126**, respectively, and a plurality of electrical output and clock output signals, denoted herein as Data Out N **129**/**121** and Data Clock Out N **130**/**122**, respectively. The information provided by the plurality of electrical input signals may or may not be used by a given transceiver to transmit information via the fiber **108** and, likewise, the information received via the fiber **108** by a given transceiver may or may not be outputted by the plurality of electrical output signals. The plurality of electrical signals denoted above can be combined to form data plane or control plane bus(es) for input and output signals respectively. In some implementations, the plurality of electrical data input signals and electrical data output signals are used by logic devices or other devices located outside (not shown) a given transceiver to communicate with the transceiver's communication logic and memory **131, 132**, transmit circuitry **134, 135**, and/or receive circuitry **133,136**.

[0043] **FIG. 2** illustrates an implementation of a passive optical network (PON) **52**, where the functions described above associated with the first transceiver **100** and the second transceiver **101** of **FIG. 1**, are implemented in an optical line terminator (OLT) **150** and one ore more optical networking units (ONU) **155,** and/or optical

networking terminals (ONT) **160**, respectively. PON(s) **52** may be configured in either a point-to-point network architecture, wherein one OLT **150** is connected to one ONT **160** or ONU **155**, or a point-to-multipoint network architecture, wherein one OLT **150** is connected to a plurality of ONT(s) **160** and/or ONU(s) **155**. In the implementation shown in **FIG. 2,** an OLT **150** is in communication with multiple ONTs/ONUs **160**, **155** via a plurality of optical fibers **152**. The fiber **152** coupling the OLT **150** to the PON **52** is also coupled to other fibers **152** connecting the ONTs/ONUs **160**, **155** by one or more passive optical splitters **157**. All of the optical elements between an OLT and ONTs/ONUs are often referred to as the Optical Distribution Network (ODN). Other alternate network configurations, including alternate implementations of point-to-multipoint networks are also possible.

[0044] **FIG. 3** shows a system block diagram for an implementation of transceiver **100**. It will be appreciated that, while not always shown, one or more elements or blocks in the following embodiments may be sealed in one or more faraday cages or combined with blocks in faraday cages already shown. It will also be appreciated that, while not shown, one or more elements or blocks in the following embodiments may be combined onto one or more integrated circuits (IC) or surface mount photonic (SMP) devices. The following is a description of the functions and responsibilities that are part of an implementation of the Communication Logic & Memory **131** of transceiver **100.** The Communication Logic & Memory **131** includes an asynchronous or synchronous system transmit (TX) interface **301** and receive (RX) interface **302** that is supported by the TX Path **303** and RX Path **304** blocks. System interfaces **301**,**302** and management or control interfaces can be selected from conventional interfaces including serial, serial XFI, parallel, GMII, XGMII, SGMII, RGMII or XAUI or some other interface may be used. TX Path **303** and RX Path **304** blocks manage the TX and RX interfaces **301,302** and feed data into and get data from the transmission convergence layer or media access control (TC-Layer/MAC) block **305**. TX Path **303** and RX Path **304** blocks may perform line code adaptation functions (e.g., line coding used outside the transceiver can be terminated by a TX Path block **303** or sourced by a RX Path block **304** to allow a bit stream, cell, frame, and/or packet formatted data to be adapted for processing by a TC-Layer/MAC block **305**). The TC-Layer/MAC

305 block creates the transport system that the data traffic, management and control agents will exploit. TC-Layer/MAC **305** block includes a TC-layer protocol stack such as specified in the ITU G.984 specification (incorporated herein by reference), IEEE 802.3ah MAC protocol stack specification (incorporated herein by reference) or a derivative thereof. A variety of other protocol stacks may also be used. The TC-Layer/MAC **305** block may perform the additional functions of equalizer, coding, queue and demultiplexing management. The TC-Layer/MAC **305** block sends transmit data to a DeMux **306** block, which splits the transmitting data into a plurality of data paths (two paths shown in **FIG. 3**) for demultiplexing data across multiple fibers. Some implementations need not include DeMux **306** block (and hence do not support demultiplexing data across multiple fibers). DeMux **306** block may demultiplex data across a subset of fibers to exclude fibers experiencing link failure to ensure data communications continue. The exclusion of fiber links experiencing failure is controlled by the TC-Layer/MAC **305** block as part of the demultiplexing management function.

[0045] After DeMux **306** block, in one implementation, the transmit paths have analogous processing blocks. In an alternative implementation, independent signal processing can be supported in each path. **FIG. 3** shows two transmit paths, though more can be included. In a transmit path, the transmit data is provided to the outer coder **307a, 307b** block. In one implementation, outer coder **307a** performs a reed-solomon coding. The outer coder **307a, 307b** block provides data to the inner coder **308a, 308b** block. In order to improve the energy per bit required to deliver the transmitting data, an inner coder **308a, 308b** is used. Outer coder **307a, 307b** may be used to support forward error correction (FEC) recovery of bit(s) errors. In one implementation, inner coder **308a, 308b** implements a trellis coding method. Data from the inner coder **308a, 308b** is provided to Modulation (MOD) **309a, 309b** block. Alternatively, in some implementations, the outer coder **307a, 307b** and inner coder **308a, 308b** blocks are not used, and the output of the DeMux **306** block is provided directly to the MOD **309a, 309b** block. Other outer coding methods that work on bit or symbol streams of arbitrary length can be used, for example linear block codes such as Low-density parity-check (LDPC) and convolutional codes such as Turbo

code may be used. Other inner coding methods that are complementary to the outer code as well as inner coding methods that are designed to shape or control the relative intensity noise (RIN) of the optical transmitter to improve overall system performance may be used. For example, an inner coder that dynamically adapts to measured RIN or compensates for measured temperature or other artifacts of laser design may be used.

[0046] To increase the number of bits per symbol transmitted, m-ary modulation is performed in the MOD **309a, 309b** block. In one implementation, an m-ary modulation method such as Quadrature Amplitude Modulation (QAM), QAM-32, QAM-256, Pulse Amplitude Modulation (PAM), PAM-5, PAM-17, Quadrature Phase Shift Keying (QPSK), differential QPSK (DQPSK), return-to-zero QPSK (RZ-QPSK), dual-polarized QPSK (DP-QPSK), or Orthogonal Frequency Division Multiplexing (OFDM) is used. Other m-ary modulation communication methods can be used, in particular other coherent modulation techniques which are known in the art. After processing by the MOD **309a, 309b** block, the transmit data is converted to an analog signal by a Digital to Analog Converter (DAC) **310a, 310b**. In one implementation, DAC **310a, 310b** is configured to shape, condition or emphasize the signal for improved transmission performance. The DAC **310a, 310b** passes the transmit data via electrical signals **311a, 311b** to the laser driver (Driver) **312a, 312b** as part of an implementation of TX **134** in an Optical Module **326**. The driver **312a, 312b** drives an optical transmitter, such as the Laser Diode (LD) **313a, 313b**, which transmits light in response to transmit data signals received from the driver **312a, 312b**. The light emitted from LD **313a, 313b** is directed into the fibers **314a, 314b** with the aid of a fiber optic interface (not shown). The fiber optic interface may include the necessary components (e.g., filters) to implement WDM, CWDM or DWDM functions.

[0047] On the receive side of the transceiver **100** as part of an implementation of RX **133** in an Optical Module **326**, light propagated across an ODN (not shown in **FIG. 3**) travels over fibers **314a, 314b** through a fiber optic interface (not shown) and is received by an optical detector, such as the photo diode (PD) **315a, 315b**. In response, the PD **315a, 315b** provides a photocurrent to the TransImpedance

Amplifier (TIA) **316a, 316b** that converts the photocurrent into an electrical voltage signal. The electrical voltage signal from the TIA **316a, 316b** is then transmitted to a Linear Amplifier (LA) **317a, 317b** as a differential signal or a single-ended signal **318a, 318b**. The LA **317a, 317b** performs signal conditioning on the received electrical voltage signal to provide increased resolution and system performance. The LA **317a, 317b** provides an electrical signal **319a, 319b** to a Clock Data Recovery (CDR) and Equalization (EQ) **320a, 320b** block that recovers clock and data signals and performs equalization on the received data, which is then provided to a De-Mod & Inner Decoder **323a, 323b**. The CDR & EQ 3**20a, 320b** block may implement a blind equalization method or decision-directed equalization method. Blind equalization is discussed further below. Other equalization methods may be used, particularly those that aid the CDR. The De-Mod & Inner Decoder **323a, 323b** block performs complementary de-modulation to the m-ary modulation performed in the MOD **309a, 309b** block as well as a complementary decoding method to the coding method performed in the Inner Coder **308a, 308b** block. In one implementation, De-Mod & Inner Decoder **323a, 323b** includes a Viterbi decoder. Other decoding means may be used. Received data is then provided to the outer decoder **324a, 324b** block, which performs a complementary decode to the error detection and/or recovery method chosen in the outer coder **307a, 307b** block. After demodulation and decoding, the received data is then provided to the Mux **325** block that performs a complementary function to the DeMux **306** block. The combined received data is then provided to the TC-Layer/MAC **305**. In implementations without Outer Coder **307a, 307b** and Inner Coder **308a, 308b** blocks, the output of the CDR & EQ **320a, 320b** block is provided directly to the Mux **325** block.

[0048] The RX **133,136** and TX **134,135** circuitry of transceivers **100,101**, or portions thereof, for example, PD **315a, 315b** and LA **317a, 317b**, can be combined within industry standard optical modules. Common optical module standards are 300pin, XENPAK, X2, and XPAK transponders and XFP or SFP and SFP+ transceivers. These optical modules include unidirectional fiber links with one fiber link for transmit path and a second fiber link for the receive path. However, implementations of optical modules **326, 401, 501** incorporate a plurality of bi-directional fiber links

for transmitting demultiplexed data on separate fiber links. Any of a variety of optical couplers may be used to separate and/or combine light propagating into or out of the fiber links. These optical modules **326, 401, 501** used herein can conform to a form factor of standard optical modules such as the 300pin, XENPAK, X2, XPAK, XFP or SFP and SFP+. Other form factors may also be used.

[0049] Alternatively, in other implementations of transceiver **100**, functions described above may be integrated into various different components. For example, in the implementation of transceiver **100** shown in **FIG. 4**, various functions may be incorporated into optical module **401** such as: digital to analog conversion **310a, 310b**; analog to digital conversion **321a, 321b**; clock data recovery and equalization **320a, 320b**; m-ary modulation **309a, 309b**; m-ary de-modulation **323a, 323b**; inner coder **308a, 308b**; inner de-coder **323a, 323b**; outer coder **307a, 307b**; outer de-coder **324a, 324b**, and the De-Mux **306** and Mux **325** functions that enable demultiplexing across multiple fibers. The optical module **401** may have an interface that can connect to existing TC-Layer or MAC implementations currently produced. In another alternative implementation the digital to analog conversion **310a, 310b**; analog to digital conversion **321a, 321b,** and the clock data recovery **320a, 320b** functions are incorporated into an optical module (not shown). In yet another alternative implementation of the transceiver **100** as shown in **FIG. 5**, an optical module **501** includes the De-Mux **306** and Mux **325** functions enabling demultiplexing across multiple fibers. The optical module **501** may have an interface that can connect to existing TC-Layer or MAC implementations currently produced.

[0050] Alternative implementations of transceiver **100** utilizing a single fiber link **314a** (without demultiplexing across multiple fibers) are illustrated in **FIG. 6A-6B**. Alternatively, an implementation of the transceiver **100** may utilize multiple fiber links **314a, 314b** while not performing demultiplexing across multiple fibers, as illustrated in **FIG. 7**. In this implementation, the TC-Layer/MAC **701** block manages the fiber links as independent fiber links that all connect to the same end point(s) on the network. In one implementation, TC-Layer/MAC **701** block is a derivative of the Transmission Convergence Layer specified in ITU G.984 or MAC specified in IEEE 802.3ah, with the added functionality of queue management of the traffic across the

plurality of independent fiber links. The TC-Layer/MAC **701** block may exclude use of one or more fiber links if the fiber link experiences a failure. This exclusion of failed fiber links enables the TC-Layer/MAC **701** block (i.e., queue management function) to continue providing service across a PON using the remaining active links. Each fiber can be deployed across physically different paths to provide optical fiber distribution path diversity and improved protection against failures. Failures may originate in the optical module or across elements of the ODN such as fiber or connector breaks.

Channel Equalization

[0051] An implementation for a channel equalization routine executed in the CDR & EQ **320a, 320b** block includes determining coefficient settings or weights that are applied to the received data to remove undesired information (e.g. intersymbol interference (ISI)) or noise from the received data and thereby increase the sensitivity, dynamic range of detecting signals and accuracy of receiving signals. Channel equalization can include a training or convergence period in which characteristics of the channel are learned or accounted for and coefficients, filter variables, or weights are adapted before or while processing the received data. Decision-directed equalization is an equalization method in which a known training sequence is sent during the training period and the receiver/transceiver uses the knowledge of the training sequence to learn about the channel characteristics. The training sequence can be multiplexed within a PON's TC-Layer framing protocol. Blind equalization is a process during which an unknown input data sequence is recovered from the output signal of an unknown channel (i.e., current equalization data for a given channel is unknown or otherwise unavailable). Other equalization methods may be used, digital signal processing methods, or methods that improve the accuracy of processing received data signals or improve the efficiency of processing received data signals (e.g., reducing data acquisition time, reducing power consumed) by saving or storing a first set of settings generated by processing data from a first ONU/ONT and then load previously saved second set of settings previously generated by processing data from a second ONU/ONT before processing another set of data from the second ONU/ONT.

[0052] One mode of communications used by a PON, e.g., for upstream data traffic (ONU/ONT to OLT direction), is "burst mode" communications. For example, upstream communications on a PON may include a link shared among multiple clients or ONUs/ONTs via time division multiplexing under control by an OLT. The upstream direction is divided into time slots; each time slot includes a defined number of bits. A given ONU/ONT is granted some number of time slots during which to transmit an upstream frame of data to an OLT. The upstream direction uses an orchestrated collection of bursts from the different ONU/ONTs, coordinated by the OLT that tries to maximize upstream traffic bandwidth efficiency by minimizing empty slots.

[0053] A flow chart for an exemplary upstream burst mode communication equalization process is shown in **FIG. 8A**. To read or interpret the upstream data traffic from a client ONU/ONT, an OLT trains and/or equalizes the channel for that client ONU/ONT. Since the ONU/ONTs may be at different distances from the OLT and all do not share the same fiber, different channel characteristics result. Communication efficiencies may be obtained by determining **800** a set of equalization coefficients for a channel during a burst from a client, saving **801** the determined equalization coefficients, entering a wait period **802** (also known as a PON's silence period when no client ONU/ONTs are transmitting upstream), and loading **803** the stored equalization coefficients before a next burst from the client (during the wait period), to avoid re-training or re-equalizing on every burst communication. The OLT has prior knowledge of which ONU/ONT will be transmitting data during which time slots and can use this knowledge during the time between burst communications (during the wait period) to load **803** an appropriate set of coefficients pertaining to the particular ONU/ONT transmitting prior to receiving **804** its next upstream burst. This process continues for subsequent bursts. In one implementation, periodic (though not coincident with each communication burst) updates to the channel characteristics may be made (and stored). The OLT can save **801** coefficients that have converged or have been trained after receiving burst communications from the first ONU/ONT and load **803** a new set of coefficients during the wait period between bursts (i.e., before an incoming upstream burst from a

second ONU/ONT). In another exemplary implementation, the OLT can save or store **801** coefficients or settings during the wait period **802** between burst as shown in **FIG. 8B**. In one implementation, in addition to or alternative to storage of coefficient data, the OLT may also save and load inner and/or outer coding states between bursts improving the efficiency of communication, similar to the equalization process of **FIG. 8A-8B**. Other methods that improve the accuracy and efficiency of processing burst mode data from specific ONUs/ONTs may be used following a similar process.

[0054] Another mode of communications used by a PON, e.g., for downstream data traffic (OLT to ONU/ONT direction), is "continuous mode" communications. In one implementation, a receiver, such as an ONU/ONT, equalizes a received data channel using either one of a blind equalization or a decision directed equalization method.

[0055] A flow chart for an exemplary PON activation process is shown in **FIG. 9**. In a PON in which a decision directed method is used for training an ONU/ONT receiver, a continuous mode transmitter, such as an OLT transmitter, sends a training sequence **900** multiplexed within a PON's TC-Layer downstream frame protocol. In a PON in which a blind equalization method is used, the OLT needed not send this training sequence **900**. An ONU/ONT equalizes its received downstream channel **901** before it is able to receive and interpret PON network parameters **902**. If the OLT has not been previously informed of the existence of the ONU/ONT then the ONU/ONT awaits an upstream grant window **903** available for new ONU/ONTs to respond to the OLT with its serial number **904**. After the ONU/ONT has received an upstream grant window and processed PON system parameters, the ONU/ONT sends a training sequence **905** and then its serial number **904** to the OLT. In a PON in which blind equalization is used the ONU/ONT need not send a training sequence **905**. After the OLT has received the ONU/ONT serial number the OLT will assign and send the ONU/ONT an identification number. If the ONU/ONT does not receive an identification number **906a**, the ONU/ONT returns to waiting for an upstream grant window for new ONU/ONTs **903**. Once the ONU/ONT receives an identification number **906b**, the OLT performs ranging **907** to determine the distance between the OLT and ONU/ONT and then compensates for the communication timing delays. The

ONU/ONT can perform updates continuously or periodically depending on the equalization method employed. After the downstream continuous mode channel and the upstream burst mode channel have been equalized, both ends of the PON transmission link are equalized and the ONU/ONT enters its normal operating state **908**.

Link Connection Errors

[0056] A system has been proposed that includes demultiplexing across multiple fibers as is shown above with reference to **FIG.s 3-6.** In systems using demultiplexing across multiple fibers, fibers can be connected incorrectly at installation. For example, a first transceiver **100**, such as is shown in **FIG. 3**, with fibers **314a** and **314b** can be connected to a second transceiver **101** with fiber **314b** connected in place of fiber **314a**, and fiber **314a** connected in place of fiber **314b**. The incorrect connection in this example may cause the first and second transceivers to not establish communications due to misalignment of bits during multiplexing of received data.

[0057] Information in a frame is used to synchronize a receiver (e.g., transceiver **101**) with the beginning of a frame (e.g., a "frame delimiter"). The process of discovering the beginning of a frame is called "frame synchronization." In specific protocols such as G.984, the downstream frame delimiter is called Psync, the upstream frame delimiter is called Delimiter and the process of frame synchronization in the downstream is called the HUNT. In one implementation, TC-Layer/MAC **305** block performs frame synchronization. In one implementation, specific bit patterns or values for frame delimiters are used that are unique for each fiber to differentiate one fiber from another or the order of fiber connections to correctly multiplex received data. The use of unique frame delimiters allows the TC-Layer/MAC **305** block to change the alignment of received data bits during multiplexing to adjust for the order of the fiber connections, without having to physically change the connections. Management of the bit alignment in this implementation forms part of the TC-Layer/MAC's **305** block demultiplexing management responsibilities and functions.

[0058] Alternatively, the TC-Layer/MAC **305** block may assume an order for the fiber connections to determine the alignment of bits for multiplexing the received data and

attempt frame synchronization. After a period of time with no frame synchronization success, the TC-Layer/MAC **305** block may assume a different order for the fiber connections and change the alignment of bits during multiplexing and attempt frame synchronization again. The process may repeat, including changing the alignment of bits to reflect other configurations during the multiplexing, and frame synchronization attempts continue until frame synchronization succeeds. In yet another alternative implementation, the TC-Layer/MAC **305** block may assume and attempt frame synchronization on all possible combinations of bit alignments in parallel, one of which will succeed in achieving frame synchronization.

[0059] Although the invention has been described in terms of particular implementations, one of ordinary skill in the art, in light of this teaching, can generate additional implementations and modifications without departing from the spirit of or exceeding the scope of the claimed invention. Accordingly, it is to be understood that the drawings and descriptions herein are proffered by way of example to facilitate comprehension of the invention and should not be construed to limit the scope thereof.

PTO/SB/01A (01-09)
Approved for use through 06/30/2010. OMB 0651-0032
U.S. Patent and Trademark Office; U.S. DEPARTMENT OF COMMERCE
Under the Paperwork Reduction Act of 1995, no persons are required to respond to a collection of information unless it displays a valid OMB control number.

DECLARATION (37 CFR 1.63) FOR UTILITY OR DESIGN APPLICATION USING AN APPLICATION DATA SHEET (37 CFR 1.76)

Title of Invention	System And Method For Performing High-Speed Communications Over Fiber Optical Networks

As the below named inventor(s), I/we declare that:

This declaration is directed to:

☒ The attached application, or

☐ Application No. _____ filed on _____

☐ As amended on _____ (if applicable);

I/we believe that I/we am/are the original and first inventor(s) of the subject matter which is claimed and for which a patent is sought;

I/we have reviewed and understand the contents of the above-identified application, including the claims, as amended by any amendment specifically referred to above;

I/we acknowledge the duty to disclose to the United States Patent and Trademark Office all information known to me/us to be material to patentability as defined in 37 CFR 1.56, including for continuation-in-part applications, material information which became available between the filing date of the prior application and the national or PCT International filing date of the continuation-in-part application.

WARNING:

Petitioner/applicant is cautioned to avoid submitting personal information in documents filed in a patent application that may contribute to identity theft. Personal information such as social security numbers, bank account numbers, or credit card numbers (other than a check or credit card authorization form PTO-2038 submitted for payment purposes) is never required by the USPTO to support a petition or an application. If this type of personal information is included in documents submitted to the USPTO, petitioners/applicants should consider redacting such personal information from the documents before submitting them to the USPTO. Petitioner/applicant is advised that the record of a patent application is available to the public after publication of the application (unless a non-publication request in compliance with 37 CFR 1.213(a) is made in the application) or issuance of a patent. Furthermore, the record from an abandoned application may also be available to the public if the application is referenced in a published application or an issued patent (see 37 CFR 1.14). Checks and credit card authorization forms PTO-2038 submitted for payment purposes are not retained in the application file and therefore are not publicly available.

All statements made herein of my/our own knowledge are true, all statements made herein on information and belief are believed to be true, and further that these statements were made with the knowledge that willful false statements and the like are punishable by fine or imprisonment, or both, under 18 U.S.C. 1001, and may jeopardize the validity of the application or any patent issuing thereon.

FULL NAME OF INVENTOR(S)

Inventor one: Alexander I. Soto Date: 7/25/2009

Signature: [signature] Citizen of: USA

Inventor two: Walter G. Soto Date: 7/25/2009

Signature: [signature] Citizen of: USA

☐ Additional inventors or a legal representative are being named on _____ additional form(s) attached hereto.

This collection of information is required by 35 U.S.C. 115 and 37 CFR 1.63. The information is required to obtain or retain a benefit by the public which is to file (and by the USPTO to process) an application. Confidentiality is governed by 35 U.S.C. 122 and 37 CFR 1.11 and 1.14. This collection is estimated to take 1 minute to complete, including gathering, preparing, and submitting the completed application form to the USPTO. Time will vary depending upon the individual case. Any comments on the amount of time you require to complete this form and/or suggestions for reducing this burden, should be sent to the Chief Information Officer, U.S. Patent and Trademark Office, U.S. Department of Commerce, P.O. Box 1450, Alexandria, VA 22313-1450. DO NOT SEND FEES OR COMPLETED FORMS TO THIS ADDRESS. **SEND TO: Commissioner for Patents, P.O. Box 1450, Alexandria, VA 22313-1450.**
If you need assistance in completing the form, call 1-800-PTO-9199 and select option 2.

Electronic Patent Application Fee Transmittal

Application Number:	
Filing Date:	
Title of Invention:	SYSTEM AND METHOD FOR PERFORMING HIGH-SPEED COMMUNICATIONS OVER FIBER OPTICAL NETWORKS
First Named Inventor/Applicant Name:	Alexander I Soto
Filer:	James Albert Ward
Attorney Docket Number:	UBI-002C

Filed as Small Entity

Utility under 35 USC 111(a) Filing Fees

Description	Fee Code	Quantity	Amount	Sub-Total in USD($)
Basic Filing:				
Utility filing Fee (Electronic filing)	4011	1	82	82
Utility Search Fee	2111	1	270	270
Utility Examination Fee	2311	1	110	110
Pages:				
Claims:				
Miscellaneous-Filing:				
Petition:				
Patent-Appeals-and-Interference:				

Description	Fee Code	Quantity	Amount	Sub-Total in USD($)
Post-Allowance-and-Post-Issuance:				
Extension-of-Time:				
Miscellaneous:				
			Total in USD ($)	**462**

Electronic Acknowledgement Receipt

EFS ID:	5804745
Application Number:	12512968
International Application Number:	
Confirmation Number:	6685
Title of Invention:	SYSTEM AND METHOD FOR PERFORMING HIGH-SPEED COMMUNICATIONS OVER FIBER OPTICAL NETWORKS
First Named Inventor/Applicant Name:	Alexander I Soto
Customer Number:	50625
Filer:	James Albert Ward
Filer Authorized By:	
Attorney Docket Number:	UBI-002C
Receipt Date:	30-JUL-2009
Filing Date:	
Time Stamp:	21:34:21
Application Type:	Utility under 35 USC 111(a)

Payment information:

Submitted with Payment	yes
Payment Type	Credit Card
Payment was successfully received in RAM	$462
RAM confirmation Number	5424
Deposit Account	
Authorized User	

File Listing:

Document Number	Document Description	File Name	File Size(Bytes)/ Message Digest	Multi Part /.zip	Pages (if appl.)

1	Abstract	Abstract_UBI-002C_30Jul09.pdf	35334 152b65b5e9ac5f71c8a7dba8fe9659c7736aa0d2	no	1
Warnings:					
Information:					
2	Application Data Sheet	ADS_UBI-002C_30Jul09.pdf	965900 54052b80bdf50add4d6bf9c15ace6f898d293170	no	5
Warnings:					
Information:					
3	Transmittal of New Application	Application_Transmittal_UBI-002C_30Jul09.pdf	52524 2ab08480a04350418f61c18af8bedecbcd1234ed	no	1
Warnings:					
Information:					
4	Claims	Claims_UBI-002C_30Jul09.pdf	51010 0e49bb7b09d264b2890aec92be3917e1cbd3f585	no	7
Warnings:					
Information:					
5	NPL Documents	Delavaux_et_al_QAM-PON_NPL_Reference.pdf	222430 790e6e9dff7df08fd4840d8d1cdc9d15de1c8ce4	no	3
Warnings:					
Information:					
6	Drawings-only black and white line drawings	Formal_Drawings_UBI-002C_30Jul09.pdf	59031 9dfd9999f1a15664ecc18f58a70d7212cb5a1a54	no	9
Warnings:					
Information:					
7	Information Disclosure Statement (IDS) Filed (SB/08)	IDS_by_Applicant_UBI-002C_30Jul09.pdf	101852 928feb57ce42290f765060d435b9dbc7022f16b2	no	2
Warnings:					
Information:					
This is not an USPTO supplied IDS fillable form					
8	Power of Attorney	POA_UBI-002C_27Jul09_signed.pdf	55576 061db85009bb9dd47462c6f3a070459218d7ae92	no	1
Warnings:					
Information:					
9	Specification	Specification_UBI-002C_30Jul09.pdf	128940 59b4bd936bfaef89e744a7e599c7de831396dafd	no	22

Warnings:					
Information:					
10	Oath or Declaration filed	Declaration_UBI-002C_30Jul09_signed.pdf	137377 a150d5b1dbd1680e39d0a9b1716d7de813d21e4a	no	1
Warnings:					
Information:					
11	Fee Worksheet (PTO-875)	fee-info.pdf	33216 5aee01d4b8fca34ff4a31a70a314f58363c24b9e	no	2
Warnings:					
Information:					
		Total Files Size (in bytes):	1843190		

This Acknowledgement Receipt evidences receipt on the noted date by the USPTO of the indicated documents, characterized by the applicant, and including page counts, where applicable. It serves as evidence of receipt similar to a Post Card, as described in MPEP 503.

New Applications Under 35 U.S.C. 111
If a new application is being filed and the application includes the necessary components for a filing date (see 37 CFR 1.53(b)-(d) and MPEP 506), a Filing Receipt (37 CFR 1.54) will be issued in due course and the date shown on this Acknowledgement Receipt will establish the filing date of the application.

National Stage of an International Application under 35 U.S.C. 371
If a timely submission to enter the national stage of an international application is compliant with the conditions of 35 U.S.C. 371 and other applicable requirements a Form PCT/DO/EO/903 indicating acceptance of the application as a national stage submission under 35 U.S.C. 371 will be issued in addition to the Filing Receipt, in due course.

New International Application Filed with the USPTO as a Receiving Office
If a new international application is being filed and the international application includes the necessary components for an international filing date (see PCT Article 11 and MPEP 1810), a Notification of the International Application Number and of the International Filing Date (Form PCT/RO/105) will be issued in due course, subject to prescriptions concerning national security, and the date shown on this Acknowledgement Receipt will establish the international filing date of the application.

ABSTRACT

Processing a received optical signal in an optical communication network includes equalizing a received optical signal to provide an equalized signal, demodulating the equalized signal according to an m-ary modulation format to provide a demodulated signal, decoding the demodulated signal according to an inner code to provide an inner-decoded signal, and decoding the inner-decoded signal according to an outer code. Other aspects include other features such as equalizing an optical channel including storing channel characteristics for the optical channel associated with a client, loading the stored channel characteristics during a waiting period between bursts on the channel, and equalizing a received burst from the client using the loaded channel characteristics.

PTO/SB/14 (06-07)
Approved for use through 06/30/2007. OMB 0651-0032
U.S. Patent and Trademark Office; U.S. DEPARTMENT OF COMMERCE
Under the Paperwork Reduction Act of 1995, no persons are required to respond to a collection of information unless it contains a valid OMB control number.

Application Data Sheet 37 CFR 1.76	Attorney Docket Number	UBI-002C
	Application Number	
Title of Invention	SYSTEM AND METHOD FOR PERFORMING HIGH-SPEED COMMUNICATIONS OVER FIBER OPTICAL NETWORKS	

The application data sheet is part of the provisional or nonprovisional application for which it is being submitted. The following form contains the bibliographic data arranged in a format specified by the United States Patent and Trademark Office as outlined in 37 CFR 1.76.
This document may be completed electronically and submitted to the Office in electronic format using the Electronic Filing System (EFS) or the document may be printed and included in a paper filed application.

Secrecy Order 37 CFR 5.2

☐ Portions or all of the application associated with this Application Data Sheet may fall under a Secrecy Order pursuant to 37 CFR 5.2 (Paper filers only. Applications that fall under Secrecy Order may not be filed electronically.)

Applicant Information:

Applicant 1 Remove

Applicant Authority ◉ Inventor ◯ Legal Representative under 35 U.S.C. 117 ◯ Party of Interest under 35 U.S.C. 118

Prefix	Given Name	Middle Name	Family Name	Suffix
	Alexander	I	Soto	

Residence Information (Select One) ◉ US Residency ◯ Non US Residency ◯ Active US Military Service

City	San Diego	State/Province	CA	Country of Residence i	US

Citizenship under 37 CFR 1.41(b) i: US

Mailing Address of Applicant:

Address 1	7673 Hazard Center Drive		
Address 2			
City	San Diego	**State/Province**	CA
Postal Code	92108	**Country**i	US

Applicant 2 Remove

Applicant Authority ◉ Inventor ◯ Legal Representative under 35 U.S.C. 117 ◯ Party of Interest under 35 U.S.C. 118

Prefix	Given Name	Middle Name	Family Name	Suffix
	Walter	G	Soto	

Residence Information (Select One) ◉ US Residency ◯ Non US Residency ◯ Active US Military Service

City	San Clemente	State/Province	CA	Country of Residence i	US

Citizenship under 37 CFR 1.41(b) i: US

Mailing Address of Applicant:

Address 1	2020 Costero Hermoso		
Address 2			
City	San Clemente	**State/Province**	CA
Postal Code	92673	**Country**i	US

All Inventors Must Be Listed - Additional Inventor Information blocks may be generated within this form by selecting the **Add** button. Add

Correspondence Information:

Enter either Customer Number or complete the Correspondence Information section below.
For further information see 37 CFR 1.33(a).

☐ **An Address is being provided for the correspondence Information of this application.**

PTO/SB/14 (06-07)
Approved for use through 06/30/2007. OMB 0651-0032
U.S. Patent and Trademark Office; U.S. DEPARTMENT OF COMMERCE
Under the Paperwork Reduction Act of 1995, no persons are required to respond to a collection of information unless it contains a valid OMB control number.

Application Data Sheet 37 CFR 1.76	Attorney Docket Number	UBI-002C
	Application Number	
Title of Invention	SYSTEM AND METHOD FOR PERFORMING HIGH-SPEED COMMUNICATIONS OVER FIBER OPTICAL NETWORKS	

Customer Number	50625		
Email Address	jim@jward.org	Add Email	Remove Email

Application Information:

Title of the Invention	SYSTEM AND METHOD FOR PERFORMING HIGH-SPEED COMMUNICATIONS OVER FIBER OPTICAL NETWORKS		
Attorney Docket Number	UBI-002C	**Small Entity Status Claimed**	☒
Application Type	Nonprovisional		
Subject Matter	Utility		
Suggested Class (if any)		**Sub Class (if any)**	
Suggested Technology Center (if any)	2613		
Total Number of Drawing Sheets (if any)	9	**Suggested Figure for Publication (if any)**	

Publication Information:

☐	Request Early Publication (Fee required at time of Request 37 CFR 1.219)
☐	**Request Not to Publish.** I hereby request that the attached application not be published under 35 U.S. C. 122(b) and certify that the invention disclosed in the attached application has not been and will not be the subject of an application filed in another country, or under a multilateral agreement, that requires publication at eighteen months after filing.

Representative Information:

Representative information should be provided for all practitioners having a power of attorney in the application. Providing this information in the Application Data Sheet does not constitute a power of attorney in the application (see 37 CFR 1.32).
Enter either Customer Number or complete the Representative Name section below. If both sections are completed the Customer Number will be used for the Representative Information during processing.

Please Select One:	◉ Customer Number	◯ US Patent Practitioner	◯ US Representative (37 CFR 11.9)
Customer Number	50625		

Domestic Priority Information:

This section allows for the applicant to claim benefit under 35 U.S.C. 119(e), 120, 121, or 365(c). Providing this information in the application data sheet constitutes the specific reference required by 35 U.S.C. 119(e) or 120, and 37 CFR 1.78(a)(2) or CFR 1.78(a)(4), and need not otherwise be made part of the specification.

Prior Application Status	Pending	Remove	
Application Number	Continuity Type	Prior Application Number	Filing Date (YYYY-MM-DD)
	Continuation in part of	11772187	2007-06-30
Prior Application Status	Patented	Remove	

Under the Paperwork Reduction Act of 1995, no persons are required to respond to a collection of information unless it contains a valid OMB control number.

Application Data Sheet 37 CFR 1.76	Attorney Docket Number	UBI-002C
	Application Number	
Title of Invention	SYSTEM AND METHOD FOR PERFORMING HIGH-SPEED COMMUNICATIONS OVER FIBER OPTICAL NETWORKS	

Application Number	Continuity Type	Prior Application Number	Filing Date (YYYY-MM-DD)	Patent Number	Issue Date (YYYY-MM-DD)
11772187	Continuation of	10865547	2004-06-10	7242868	2007-07-10

Prior Application Status	Abandoned		Remove
Application Number	Continuity Type	Prior Application Number	Filing Date (YYYY-MM-DD)
10865547	non provisional of	60477845	2003-06-10
Prior Application Status	Abandoned		Remove
Application Number	Continuity Type	Prior Application Number	Filing Date (YYYY-MM-DD)
10865547	non provisional of	60480488	2003-06-21

Additional Domestic Priority Data may be generated within this form by selecting the **Add** button. Add

Foreign Priority Information:

This section allows for the applicant to claim benefit of foreign priority and to identify any prior foreign application for which priority is not claimed. Providing this information in the application data sheet constitutes the claim for priority as required by 35 U.S.C. 119(b) and 37 CFR 1.55(a).

Remove

Application Number	Country [i]	Parent Filing Date (YYYY-MM-DD)	Priority Claimed
			○ Yes ◉ No

Additional Foreign Priority Data may be generated within this form by selecting the **Add** button. Add

Assignee Information:

Providing this information in the application data sheet does not substitute for compliance with any requirement of part 3 of Title 37 of the CFR to have an assignment recorded in the Office.

Assignee 1 Remove

If the Assignee is an Organization check here. ☐

Prefix	**Given Name**	Middle Name	**Family Name**	Suffix

Mailing Address Information:

Address 1			
Address 2			
City		**State/Province**	
Country [i]		Postal Code	
Phone Number		Fax Number	
Email Address			

Additional Assignee Data may be generated within this form by selecting the **Add** button. Add

Signature:

A signature of the applicant or representative is required in accordance with 37 CFR 1.33 and 10.18. Please see 37 CFR 1.4(d) for the form of the signature.

Application Data Sheet 37 CFR 1.76	Attorney Docket Number	UBI-002C
	Application Number	
Title of Invention	SYSTEM AND METHOD FOR PERFORMING HIGH-SPEED COMMUNICATIONS OVER FIBER OPTICAL NETWORKS	

Signature	/James Albert Ward #34031/			Date (YYYY-MM-DD)	2009-07-30
First Name	James	Last Name	Ward	Registration Number	34041

This collection of information is required by 37 CFR 1.76. The information is required to obtain or retain a benefit by the public which is to file (and by the USPTO to process) an application. Confidentiality is governed by 35 U.S.C. 122 and 37 CFR 1.14. This collection is estimated to take 23 minutes to complete, including gathering, preparing, and submitting the completed application data sheet form to the USPTO. Time will vary depending upon the individual case. Any comments on the amount of time you require to complete this form and/or suggestions for reducing this burden, should be sent to the Chief Information Officer, U.S. Patent and Trademark Office, U.S. Department of Commerce, P.O. Box 1450, Alexandria, VA 22313-1450. DO NOT SEND FEES OR COMPLETED FORMS TO THIS ADDRESS. **SEND TO: Commissioner for Patents, P.O. Box 1450, Alexandria, VA 22313-1450.**

Privacy Act Statement

The Privacy Act of 1974 (P.L. 93-579) requires that you be given certain information in connection with your submission of the attached form related to a patent application or patent. Accordingly, pursuant to the requirements of the Act, please be advised that: (1) the general authority for the collection of this information is 35 U.S.C. 2(b)(2); (2) furnishing of the information solicited is voluntary; and (3) the principal purpose for which the information is used by the U.S. Patent and Trademark Office is to process and/or examine your submission related to a patent application or patent. If you do not furnish the requested information, the U.S. Patent and Trademark Office may not be able to process and/or examine your submission, which may result in termination of proceedings or abandonment of the application or expiration of the patent.

The information provided by you in this form will be subject to the following routine uses:

1. The information on this form will be treated confidentially to the extent allowed under the Freedom of Information Act (5 U.S.C. 552) and the Privacy Act (5 U.S.C. 552a). Records from this system of records may be disclosed to the Department of Justice to determine whether the Freedom of Information Act requires disclosure of these records.

2. A record from this system of records may be disclosed, as a routine use, in the course of presenting evidence to a court, magistrate, or administrative tribunal, including disclosures to opposing counsel in the course of settlement negotiations.

3. A record in this system of records may be disclosed, as a routine use, to a Member of Congress submitting a request involving an individual, to whom the record pertains, when the individual has requested assistance from the Member with respect to the subject matter of the record.

4. A record in this system of records may be disclosed, as a routine use, to a contractor of the Agency having need for the information in order to perform a contract. Recipients of information shall be required to comply with the requirements of the Privacy Act of 1974, as amended, pursuant to 5 U.S.C. 552a(m).

5. A record related to an International Application filed under the Patent Cooperation Treaty in this system of records may be disclosed, as a routine use, to the International Bureau of the World Intellectual Property Organization, pursuant to the Patent Cooperation Treaty.

6. A record in this system of records may be disclosed, as a routine use, to another federal agency for purposes of National Security review (35 U.S.C. 181) and for review pursuant to the Atomic Energy Act (42 U.S.C. 218(c)).

7. A record from this system of records may be disclosed, as a routine use, to the Administrator, General Services, or his/her designee, during an inspection of records conducted by GSA as part of that agency's responsibility to recommend improvements in records management practices and programs, under authority of 44 U.S.C. 2904 and 2906. Such disclosure shall be made in accordance with the GSA regulations governing inspection of records for this purpose, and any other relevant (i.e., GSA or Commerce) directive. Such disclosure shall not be used to make determinations about individuals.

8. A record from this system of records may be disclosed, as a routine use, to the public after either publication of the application pursuant to 35 U.S.C. 122(b) or issuance of a patent pursuant to 35 U.S.C. 151. Further, a record may be disclosed, subject to the limitations of 37 CFR 1.14, as a routine use, to the public if the record was filed in an application which became abandoned or in which the proceedings were terminated and which application is referenced by either a published application, an application open to public inspections or an issued patent.

9. A record from this system of records may be disclosed, as a routine use, to a Federal, State, or local law enforcement agency, if the USPTO becomes aware of a violation or potential violation of law or regulation.

PTO/SB/06 (12-04)

Filing Date: **07/30/09**

Approved for use through 7/31/2006. OMB 0651-0032
U.S. Patent and Trademark Office; U.S. DEPARTMENT OF COMMERCE

Under the Paperwork Reduction Act of 1995, no persons are required to respond to a collection of information unless it displays a valid OMB control number.

PATENT APPLICATION FEE DETERMINATION RECORD

Substitute for Form PTO-875

Application or Docket Number: 12/512,968

APPLICATION AS FILED – PART I

FOR	(Column 1) NUMBER FILED	(Column 2) NUMBER EXTRA	SMALL ENTITY RATE ($)	SMALL ENTITY FEE ($)	OR	OTHER THAN SMALL ENTITY RATE ($)	OTHER THAN SMALL ENTITY FEE ($)
BASIC FEE (37 CFR 1.16(a), (b), or (c))	N/A	N/A	N/A	82		N/A	
SEARCH FEE (37 CFR 1.16(k), (i), or (m))	N/A	N/A	N/A	270		N/A	
EXAMINATION FEE (37 CFR 1.16(o), (p), or (q))	N/A	N/A	N/A	110		N/A	
TOTAL CLAIMS (37 CFR 1.16(i))	21 minus 20 =	1	x$26	26	OR	x$52	
INDEPENDENT CLAIMS (37 CFR 1.16(h))	3 minus 3 =	*	x$110			x$220	
APPLICATION SIZE FEE (37 CFR 1.16(s))	If the specification and drawings exceed 100 sheets of paper, the application size fee due is $270 ($135 for small entity) for each additional 50 sheets or fraction thereof. See 35 U.S.C. 41(a)(1)(G) and 37 CFR						
MULTIPLE DEPENDENT CLAIM PRESENT (37 CFR 1.16(j))			195			390	
			TOTAL	488		TOTAL	

* If the difference in column 1 is less than zero, enter "0" in column 2.

APPLICATION AS AMENDED – PART II

AMENDMENT A

	(Column 1) CLAIMS REMAINING AFTER AMENDMENT		(Column 2) HIGHEST NUMBER PREVIOUSLY PAID FOR	(Column 3) PRESENT EXTRA	SMALL ENTITY RATE ($)	SMALL ENTITY ADDI-TIONAL FEE ($)	OR	OTHER THAN SMALL ENTITY RATE ($)	OTHER THAN SMALL ENTITY ADDI-TIONAL FEE ($)
Total (37 CFR 1.16(i))	*	Minus	**	=	x =		OR	x =	
Independent (37 CFR 1.16(h))	*	Minus	***	=	x =		OR	x =	
Application Size Fee (37 CFR 1.16(s))									
FIRST PRESENTATION OF MULTIPLE DEPENDENT CLAIM (37 CFR 1.16(j))					N/A		OR	N/A	
					TOTAL ADD'T FEE		OR	TOTAL ADD'T FEE	

AMENDMENT B

	(Column 1) CLAIMS REMAINING AFTER AMENDMENT		(Column 2) HIGHEST NUMBER PREVIOUSLY PAID FOR	(Column 3) PRESENT EXTRA	RATE ($)	ADDI-TIONAL FEE ($)	OR	RATE ($)	ADDI-TIONAL FEE ($)
Total (37 CFR 1.16(i))	*	Minus	**	=	x =		OR	x =	
Independent (37 CFR 1.16(h))	*	Minus	***	=	x =		OR	x =	
Application Size Fee (37 CFR 1.16(s))									
FIRST PRESENTATION OF MULTIPLE DEPENDENT CLAIM (37 CFR 1.16(j))					N/A		OR	N/A	
					TOTAL ADD'T FEE		OR	TOTAL ADD'T FEE	

* If the entry in column 1 is less than the entry in column 2, write "0" in column 3.
** If the "Highest Number Previously Paid For" IN THIS SPACE is less than 20, enter "20".
*** If the "Highest Number Previously Paid For" IN THIS SPACE is less than 3, enter "3".
The "Highest Number Previously Paid For" (Total or Independent) is the highest number found in the appropriate box in column 1.

This collection of information is required by 37 CFR 1.16. The information is required to obtain or retain a benefit by the public which is to file (and by the USPTO to process) an application. Confidentiality is governed by 35 U.S.C. 122 and 37 CFR 1.14. This collection is estimated to take 12 minutes to complete, including gathering, preparing, and submitting the completed application form to the USPTO. Time will vary depending upon the individual case. Any comments on the amount of time you require to complete this form and/or suggestions for reducing this burden, should be sent to the Chief Information Officer, U.S. Paten and Trademark Office, U.S. Department of Commerce, P.O. Box 1450, Alexandria, VA 22313-1450. DO NOT SEND FEES OR COMPLETED FORMS TO THIS ADDRESS. **SEND TO: Commissioner for Patents, P.O. Box 1450, Alexandria, VA 22313-1450.**

If you need assistance in completing the form, call 1-800-PTO-9199 and select option 2.