US 20010035997A1

(19) United States

(12) Patent Application Publication (10) Pub. No.: US 2001/0035997 A1

Agazzi (43) Pub. Date: Nov. 1, 2001

(54) HIGH-SPEED TRANSMISSION SYSTEM FOR OPTICAL CHANNELS

(76) Inventor: **Oscar E. Agazzi**, Irvine, CA (US)

Correspondence Address:
CHRISTIE, PARKER & HALE, LLP
350 WEST COLORADO BOULEVARD
SUITE 500
PASADENA, CA 91105 (US)

(21) Appl. No.: **09/765,014**

(22) Filed: **Jan. 17, 2001**

Related U.S. Application Data

(63) Non-provisional of provisional application No. 60/177,034, filed on Jan. 17, 2000.

Publication Classification

(51) **Int. Cl.**[7] **H04B 10/12**; H04B 10/04; H04B 10/06

(52) **U.S. Cl.** **359/173**; 359/188; 359/195

(57) **ABSTRACT**

A method and apparatus for transmission of data on bandwidth limited fiber optic channels. A multilevel signaling alphabet having multiple levels of optical intensity are used to transmit signals on optical channels. In order to counteract the decrease in signal to noise ratio resulting from the use of a multilevel signaling alphabet over a bilevel signaling alphabet trellis encoding of the data to be transmitted is employed. To counteract intersymbol interference due to signaling faster than the Nyquist Rate, equalization methods such as Tomlinson-Harashima preceding and decision feedback equalization are employed.

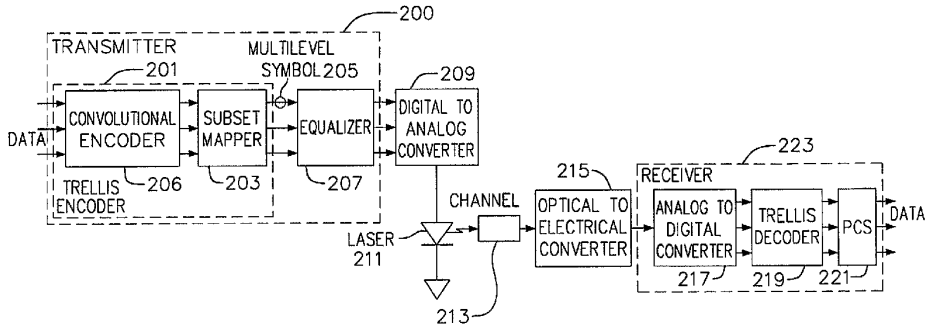

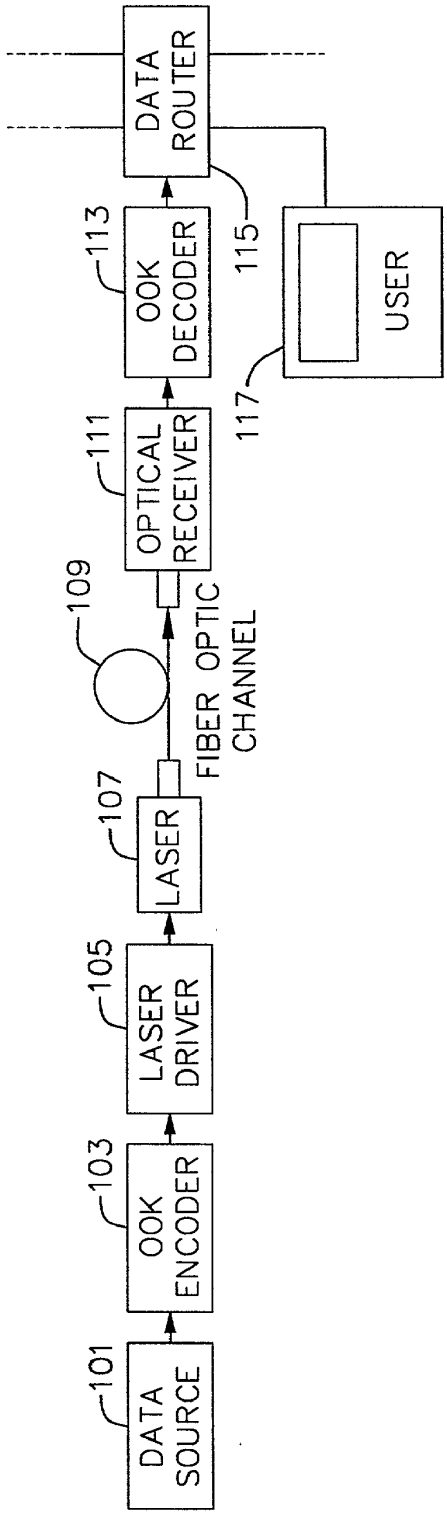

FIG. 1
PRIOR ART

FIG. 2

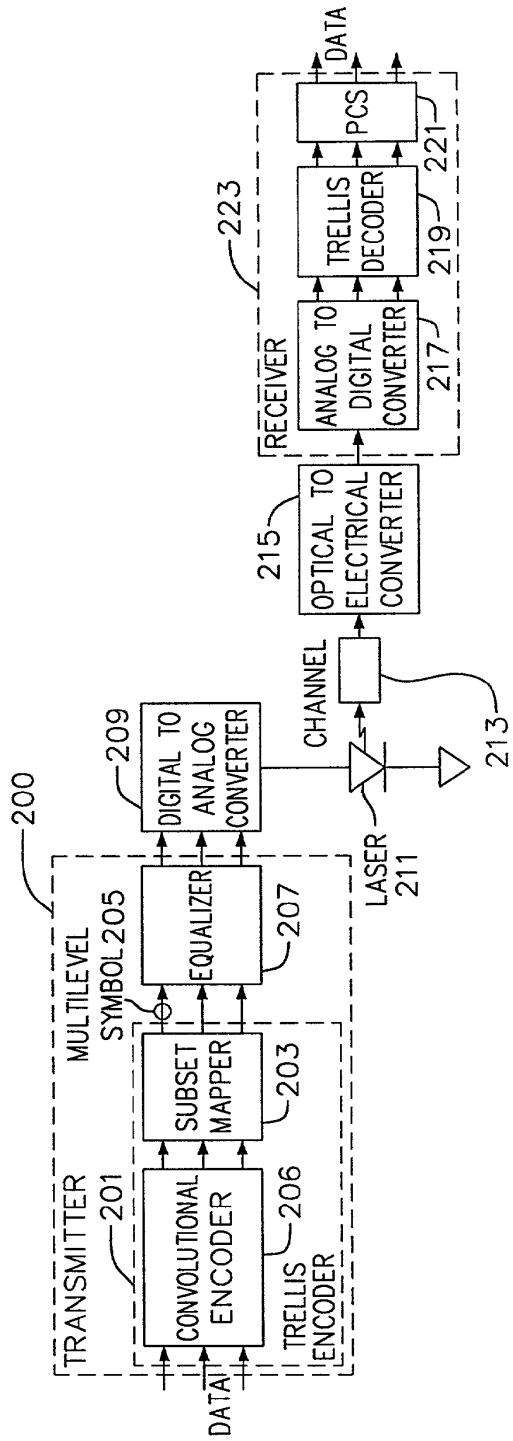
200
TRANSMITTER
201
CONVOLUTIONAL ENCODER
206
TRELLIS ENCODER
DATA
SUBSET MAPPER
203
MULTILEVEL SYMBOL 205
EQUALIZER
207
DIGITAL TO ANALOG CONVERTER
209
LASER
211
CHANNEL
213
OPTICAL TO ELECTRICAL CONVERTER
215
RECEIVER
223
ANALOG TO DIGITAL CONVERTER
217
TRELLIS DECODER
219
PCS
221
DATA

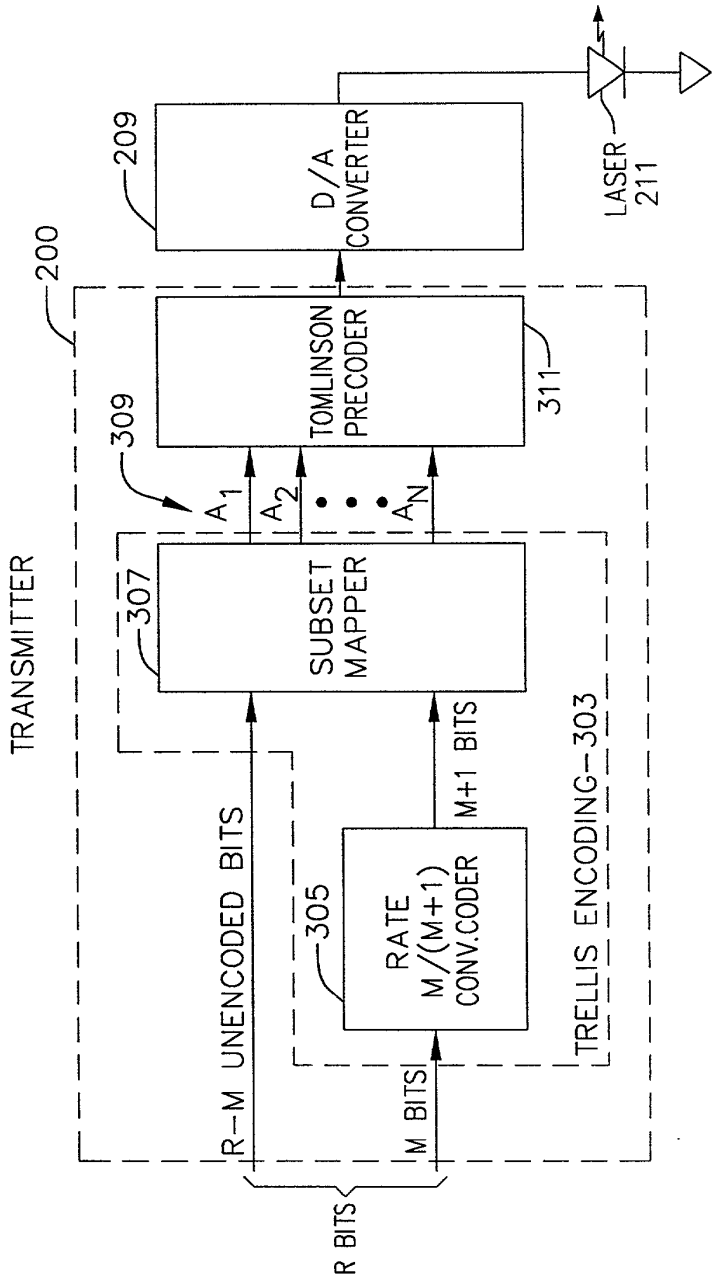
TRANSMITTER
200
R BITS
R−M UNENCODED BITS
M BITS
305
RATE
M/(M+1)
CONV.CODER
M+1 BITS
307
SUBSET
MAPPER
TRELLIS ENCODING−303
309
A1
A2
AN
TOMLINSON
PRECODER
311
209
D/A
CONVERTER
LASER
211

FIG.3

FIG. 4

TOMLINSON–HARASHIMA PRECODING(THP)

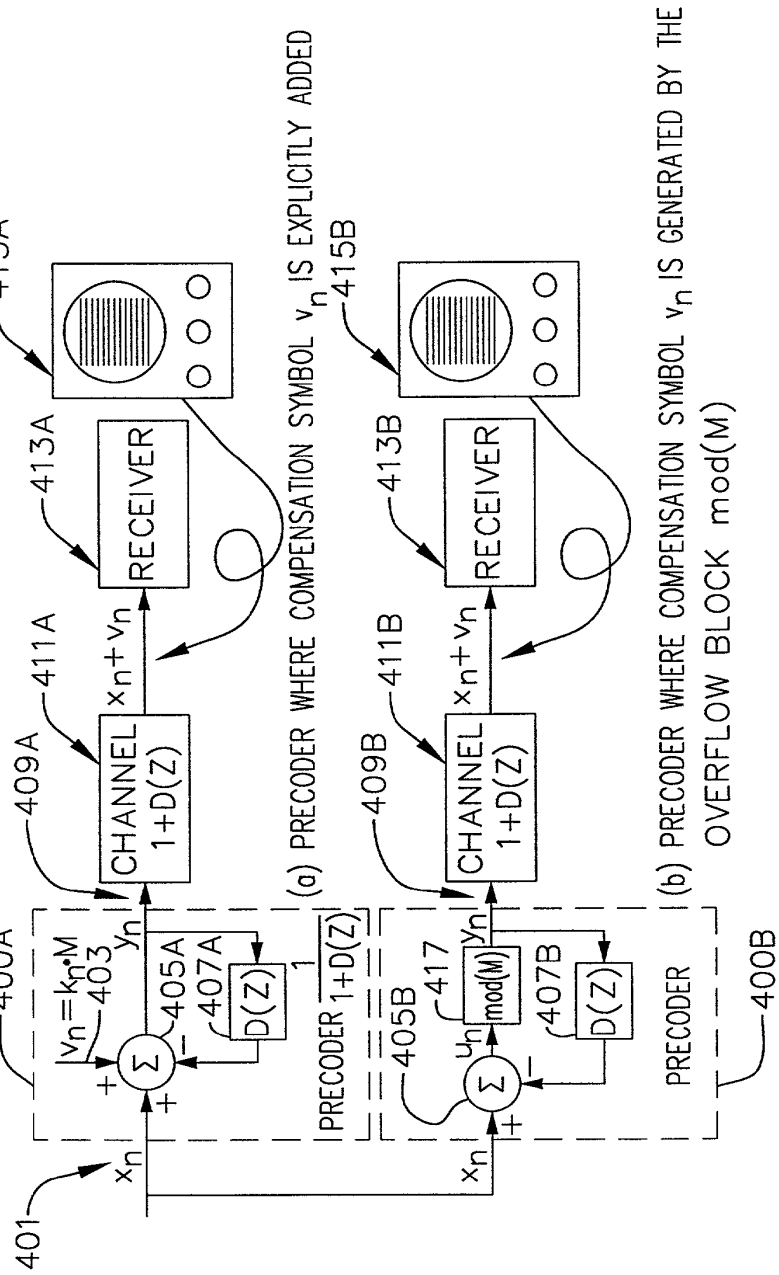

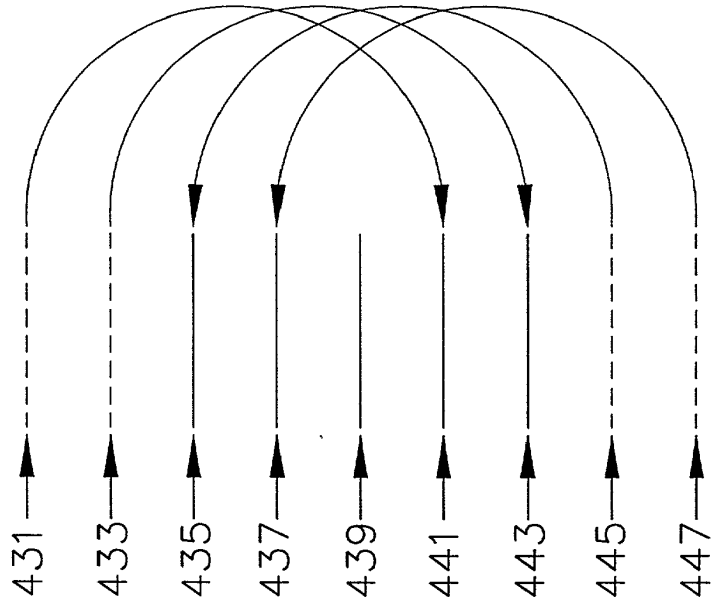

FIG. 4a

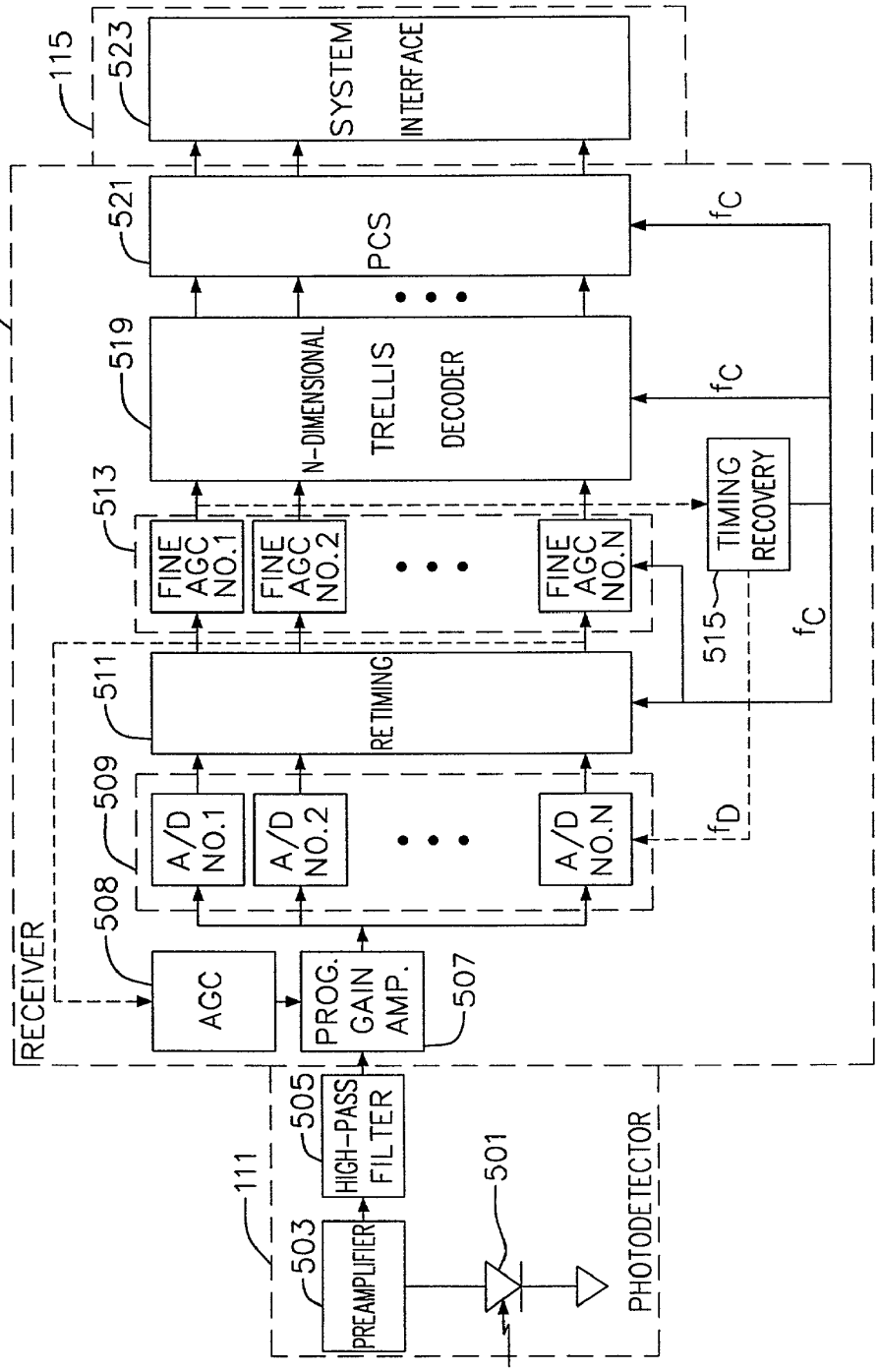
RECEIVER
113
115
523
SYSTEM INTERFACE
521
PCS
519
N-DIMENSIONAL TRELLIS DECODER
513
FINE AGC NO.1
FINE AGC NO.2
FINE AGC NO.N
511
RETIMING
509
A/D NO.1
A/D NO.2
A/D NO.N
508
AGC
PROG. GAIN AMP.
507
505
HIGH-PASS FILTER
111
503
PREAMPLIFIER
501
PHOTODETECTOR
TIMING RECOVERY
515
f_C
f_D

FIG. 5

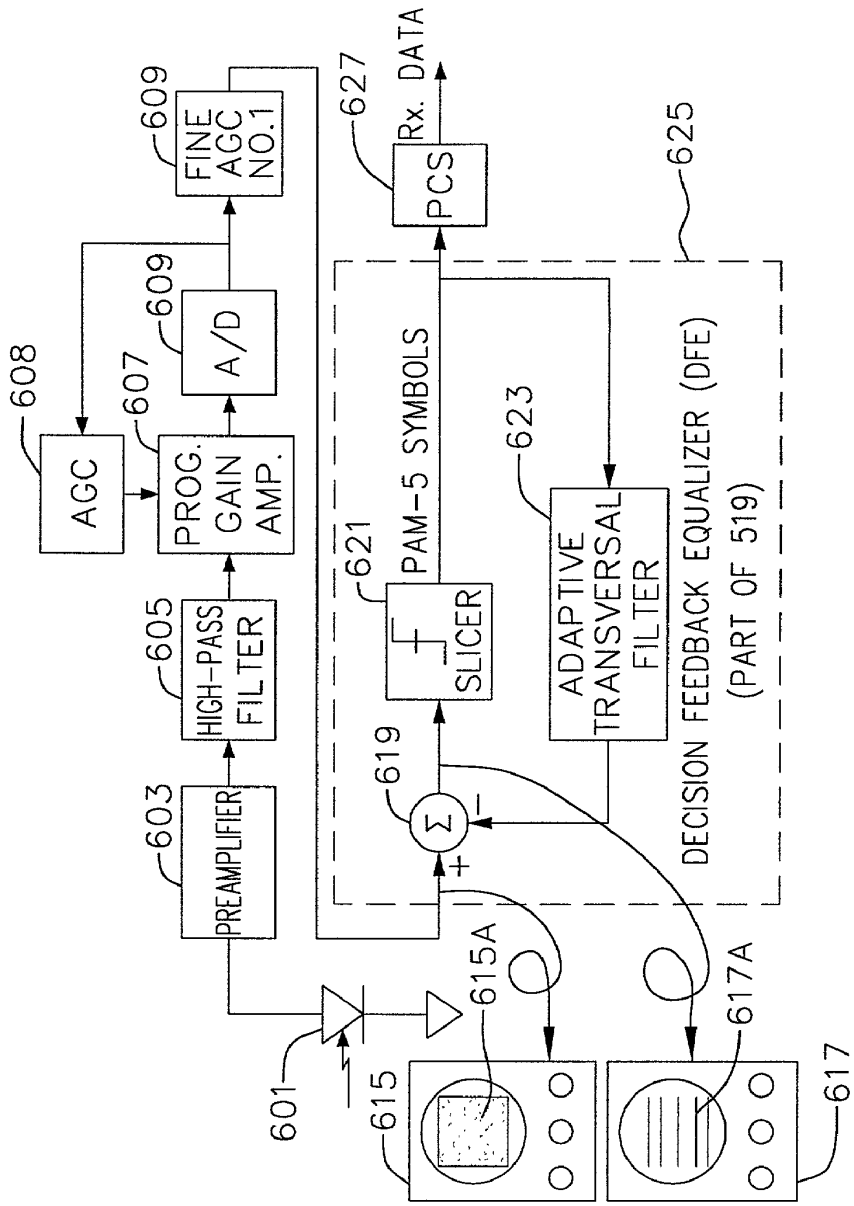
601
603
PREAMPLIFIER
605
HIGH-PASS FILTER
607
PROG. GAIN AMP.
608
AGC
609
A/D
609
FINE AGC NO.1
615
615A
617
617A
619
621
SLICER
PAM-5 SYMBOLS
623
ADAPTIVE TRANSVERSAL FILTER
625
DECISION FEEDBACK EQUALIZER (DFE)
(PART OF 519)
627
PCS
Rx. DATA

FIG. 6

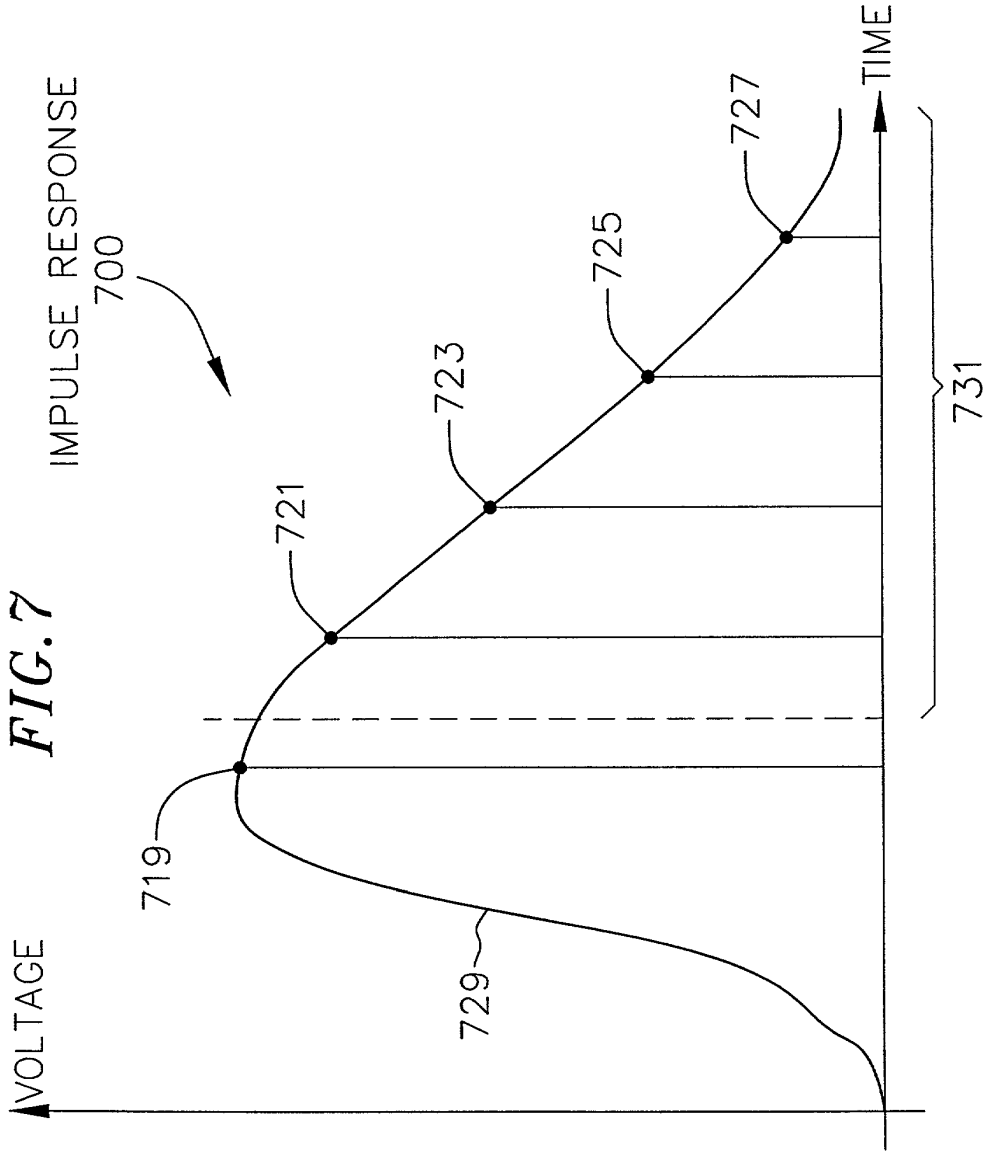
IMPULSE RESPONSE
700
VOLTAGE
TIME
719
721
723
725
727
729
731

FIG. 7

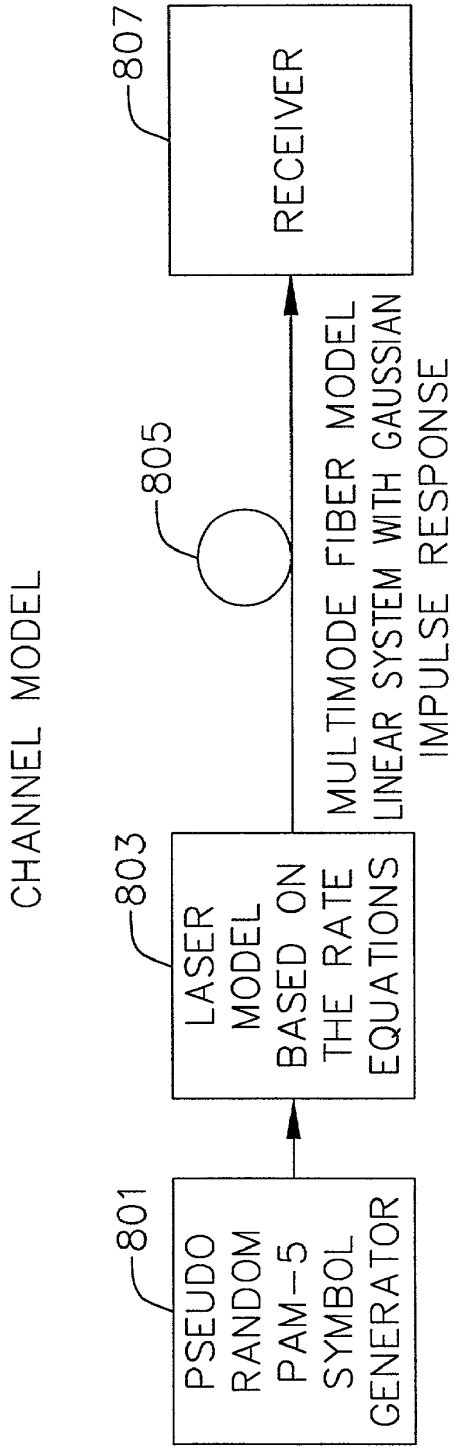

FIG. 8

CHANNEL MODEL

FIG. 9

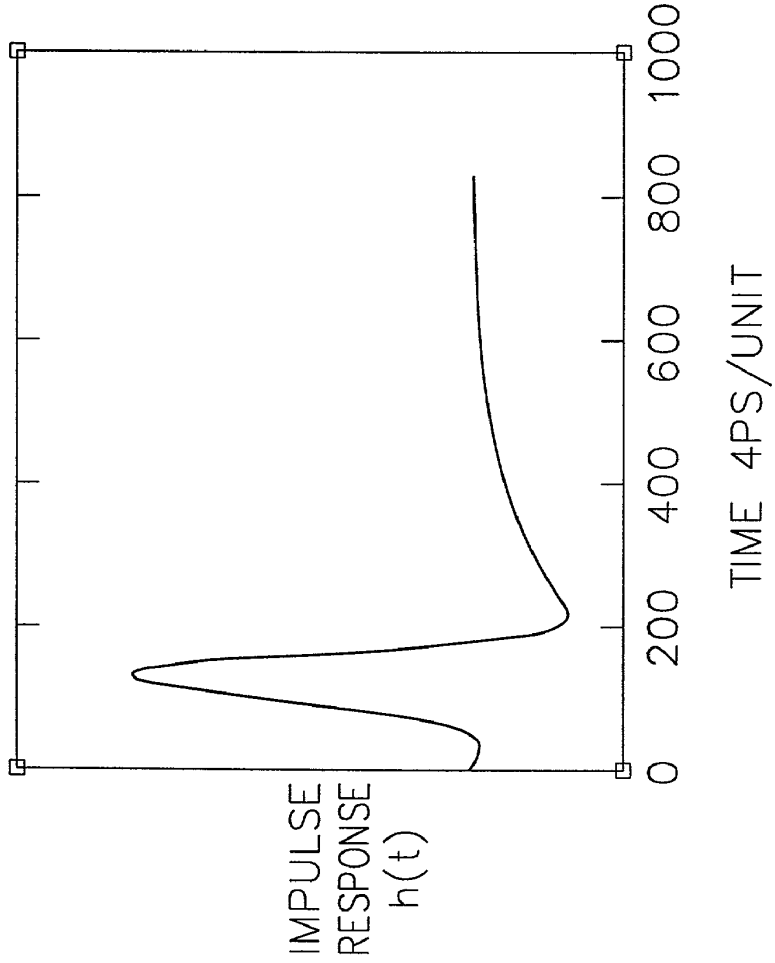

FIG. 10

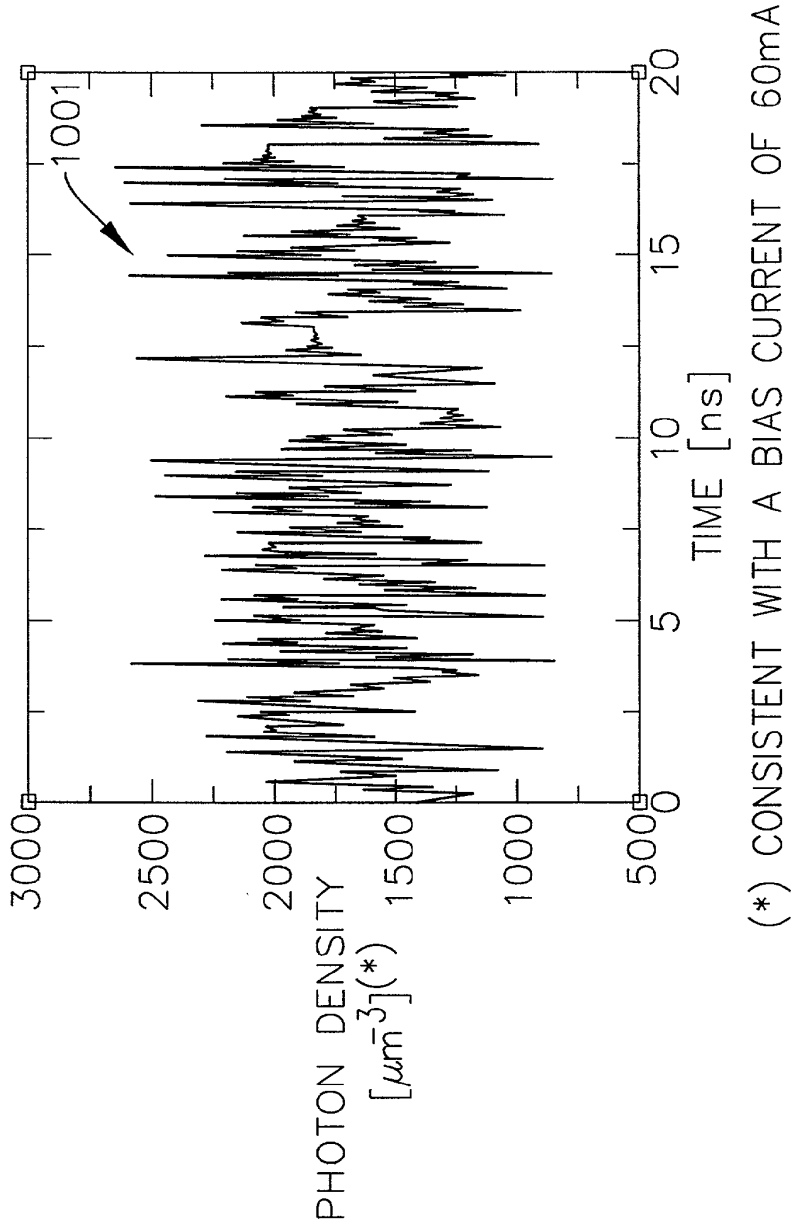
1001
3000
2500
2000
1500
1000
500
0
5
10
15
20
PHOTON DENSITY
[μm^{-3}](*)
TIME [ns]
(*) CONSISTENT WITH A BIAS CURRENT OF 60mA

FIG. 11

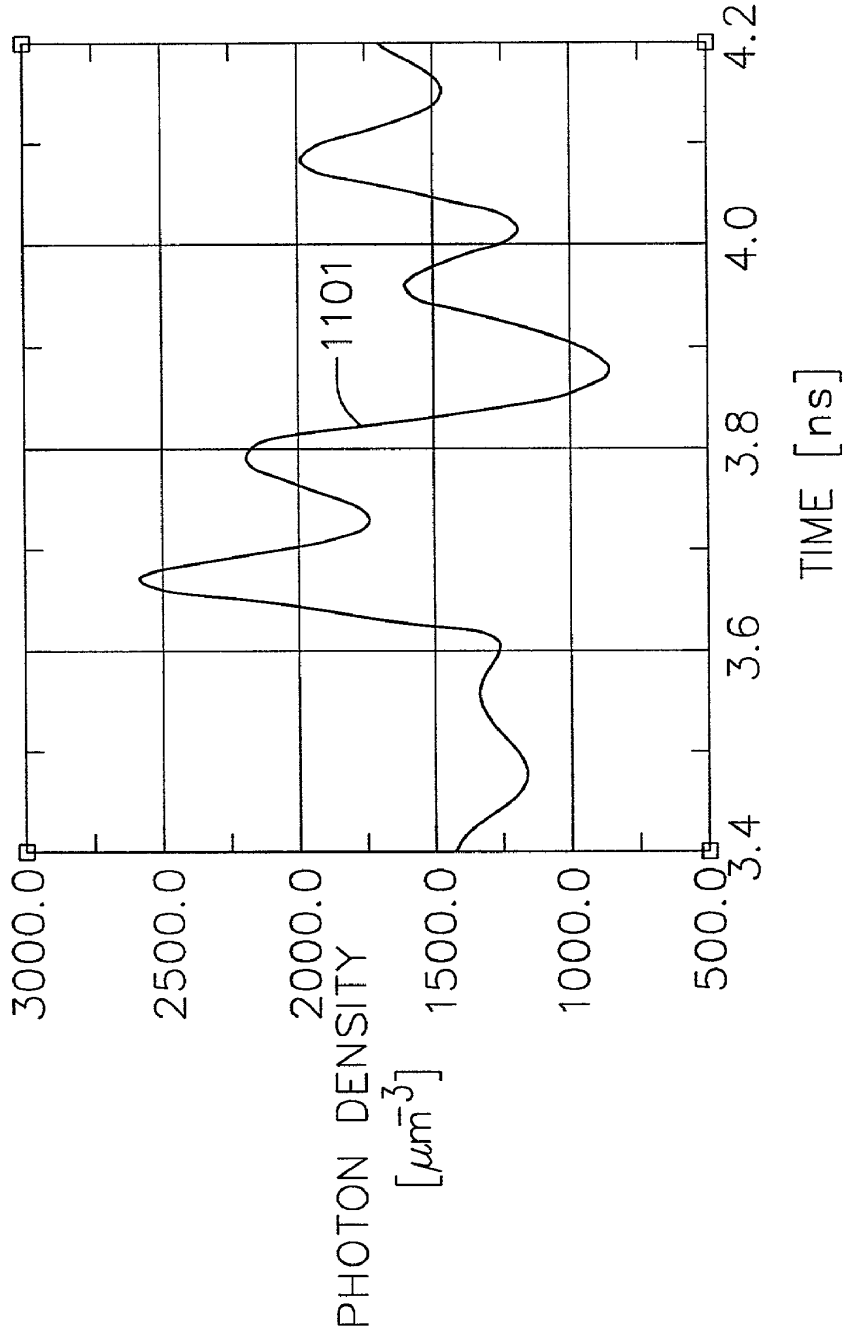
3000.0
2500.0
2000.0
1500.0
1000.0
500.0
PHOTON DENSITY
[μm⁻³]
1101
3.4
3.6
3.8
4.0
4.2
TIME [ns]

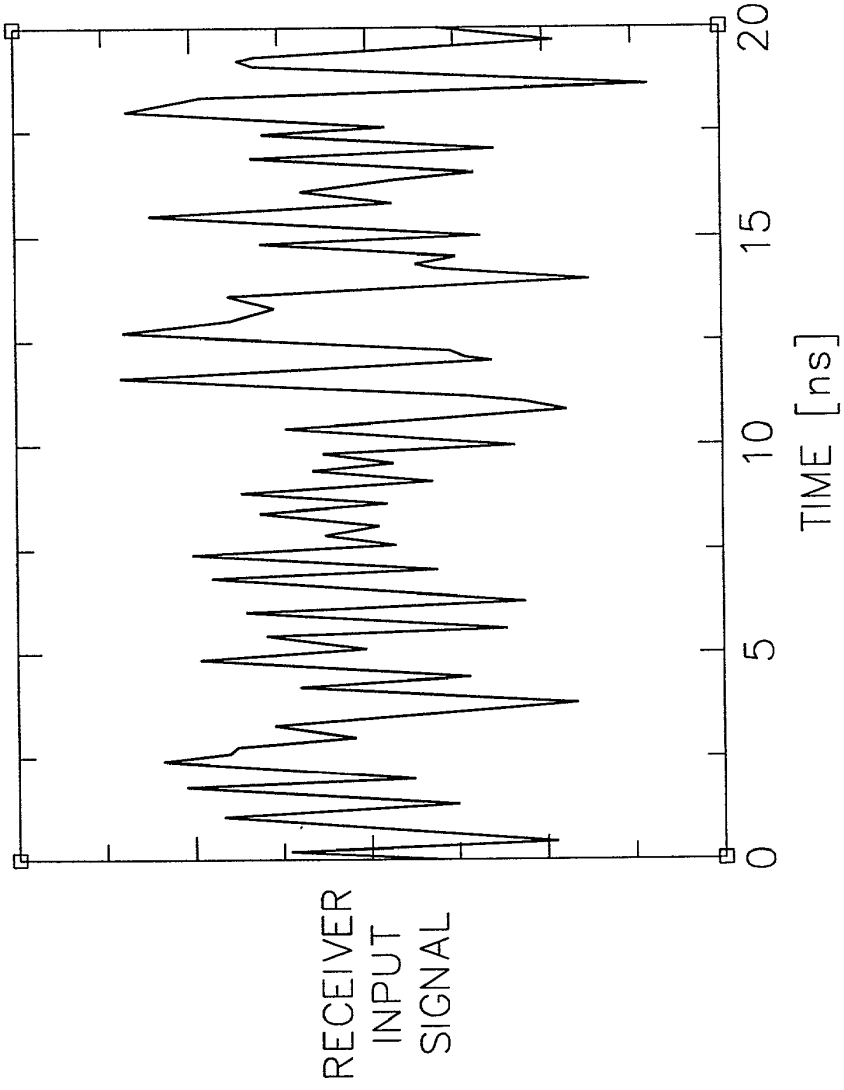

FIG. 12

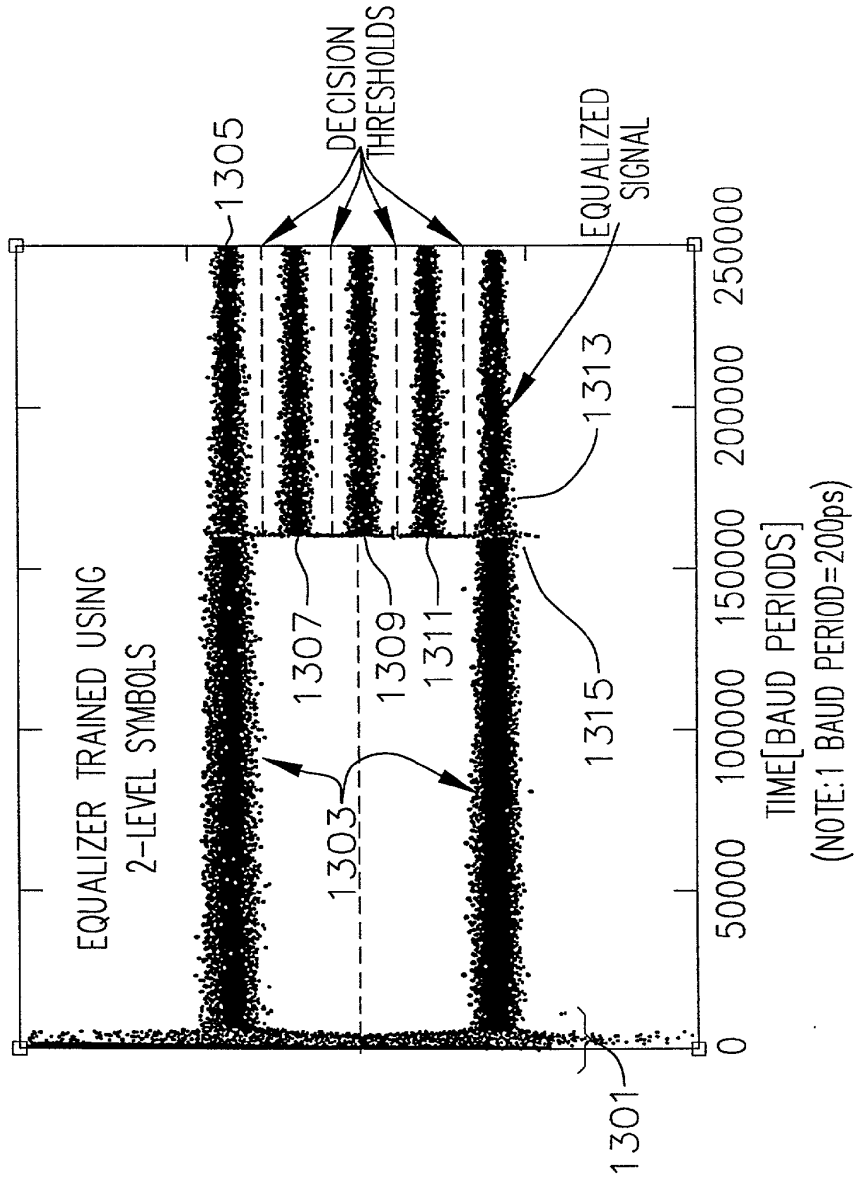
EQUALIZER TRAINED USING
2-LEVEL SYMBOLS
1305
DECISION
THRESHOLDS
EQUALIZED
SIGNAL
1313
1307
1309
1311
1303
1315
1301
0
50000
100000
150000
200000
250000
TIME[BAUD PERIODS]
(NOTE:1 BAUD PERIOD=200ps)

FIG. 13

FIG. 14

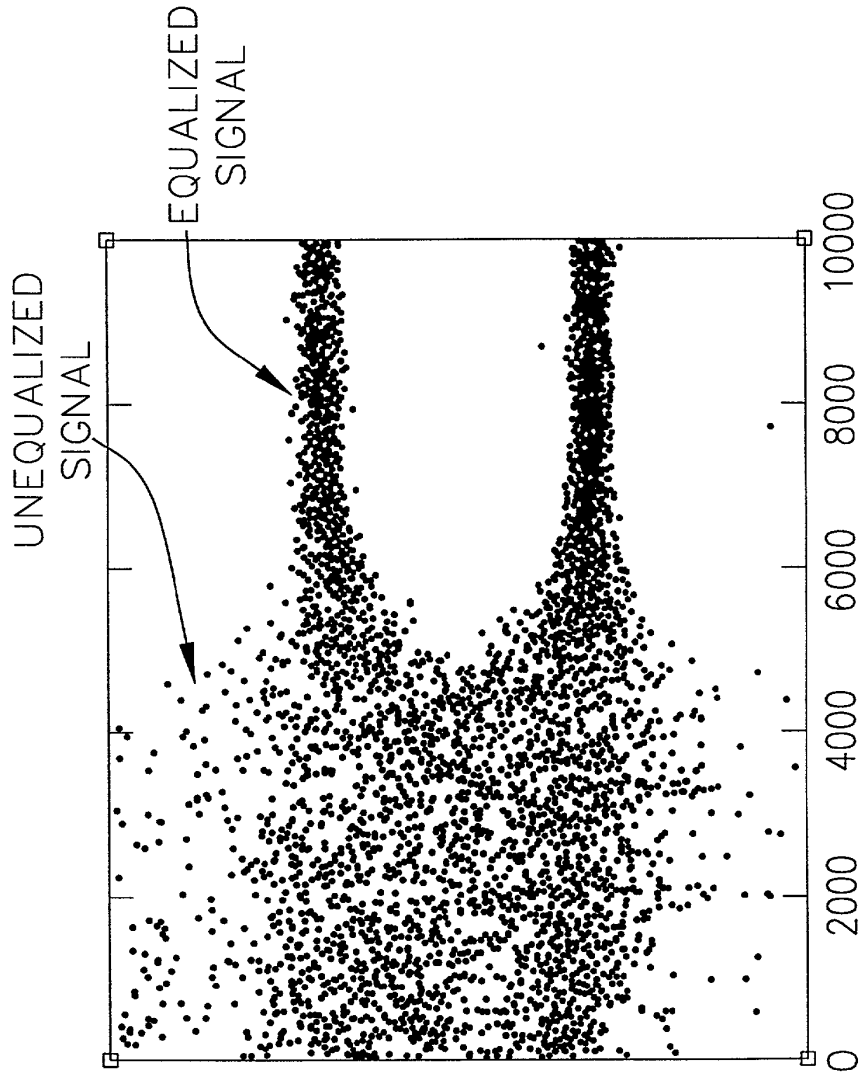
UNEQUALIZED SIGNAL
EQUALIZED SIGNAL
0
2000
4000
6000
8000
10000

HIGH-SPEED TRANSMISSION SYSTEM FOR OPTICAL CHANNELS

CROSS-REFERENCE TO RELATED APPLICATIONS

[0001] This Application claims priority from Provisional Application No. 60/177,034 entitled HIGH SPEED TRANSMISSION FOR OPTICAL CHANNELS filed on Jan. 17, 2000, which is incorporated by reference herein as though set forth in full.

FIELD OF THE INVENTION

[0002] The present invention relates generally to apparatus and methods for high speed data transmission over optical channels, and, in particular embodiments, to transmission of data using pulse amplitude modulation, trellis coding, and equalization techniques.

BACKGROUND OF THE INVENTION

[0003] The demand for higher capacity data transmission systems continues to increase. To satisfy the ever increasing demand for more data transmission capacity higher baud rate systems such as optical channels have been used. At high baud rates some optical fibers may exhibit phenomena such as multimode transmission characteristics and intersymbol interference, which can limit the signaling rate available on that fiber. Therefore, there is a need within the art for methods and apparatus that are capable of higher baud rates, and for those which can compensate for the problems encountered with high speed data transmission.

SUMMARY OF THE INVENTION

[0004] In one aspect of the invention, an apparatus for transmitting data on a fiber optic channel is disclosed. The apparatus comprises a trellis encoder that accepts data to be transmitted, applies a convolutional coding to a portion of the data, and produces a trellis coding of the data to be transmitted. A subset mapper accepts the trellis coding and produces a plurality of pulse amplitude modulated (PAM) symbols from the trellis coding. A Tomlinson precoder accepts the PAM symbols and applies a Tomlinson precoding the PAM symbols. A converter converts the PAM symbols into a form for coupling into a fiber channel.

BRIEF DESCRIPTION OF THE DRAWINGS

[0005] These and other features, aspects, and advantages of the present invention will become better understood with regard to the following description, appended claims, and accompanying drawings where:

[0006] **FIG. 1** is a block diagram illustrating components of an optical data communication system.

[0007] **FIG. 2** is a block diagram of a optical communication system according to an embodiment of the invention.

[0008] **FIG. 3** is a block diagram illustrating a fiber optic transmitter according to an embodiment of the invention.

[0009] **FIG. 4** is a graphical illustration of Tomlinson-Harashima preceding (THP).

[0010] **FIG. 4*a*** is a graphical illustration of the mapping of excess pulse amplitude modulation levels which are produced by a Tomlinson-Harashima precoder.

[0011] **FIG. 5** is a block diagram of a receiver, according to an embodiment of the invention.

[0012] **FIG. 6** is a simplified block diagram of a receiver, which contains a decision feedback equalizer (DFE).

[0013] **FIG. 7** is a graphical illustration of the impulse response of an exemplary fiber channel.

[0014] **FIG. 8** is a block diagram illustrating a fiber channel model used in conjunction with a laser model based on the rate equations.

[0015] **FIG. 9** is a graph representing of the impulse response of a linear system having a Gaussian impulse response.

[0016] **FIG. 10** is a graph illustrating an output of a laser model based on the rate equations.

[0017] **FIG. 11** is a graph illustrating an expanded portion of the graph illustrated in **FIG. 11**.

[0018] **FIG. 12** is a graph of the simulated output of the laser model of **FIG. 10** after passage through a simulated channel.

[0019] **FIG. 13** is an eye diagram of a simulated receiver equalizer, illustrating a transition between a bilevel training mode and receiving PAM-5 symbols.

[0020] **FIG. 14** is a graph of a magnified portion of the graph of **FIG. 13**, illustrating the convergence of the equalizer during a training sequence.

DETAILED DESCRIPTION OF THE INVENTION

[0021] The demand for higher data carrying capacity transmissions systems continues to increase. Accordingly, embodiments of the present invention relate to methods and apparatus for increasing the rate of data transmission in optical transmission systems.

[0022] **FIG. 1** is a block diagram illustrating a prior art optical data communication system.

[0023] In **FIG. 1 a** data source **101** provides data to be transmitted over fiberoptic channel **109**. Data source **101** may be, for example, the Internet, a cable television head end, a corporate network or a variety of other data sources.

[0024] Data from data source **101** is provided to an encoder **103**, which encodes the data. Encoding may encompass representing the input data from the data source **101** in a variety of ways. In the exemplary system of **FIG. 1** the data encoding comprises translating the data received onto a series of OOK (On Off Keying) symbols for transmission using a laser. OOK represents the data as a series of on-off pulses or two levels of optical intensity.

[0025] Once the data is encoded, the encoded signal is coupled into an optical channel driver, such as a laser driver **105**, which controls the intensity of a laser **107**. The output of laser **107** is coupled into a fiber optic channel **109**. The fiber optic channel is further coupled to an optical receiver **111**. The optical channel **109** may be of various lengths depending upon the application.

[0026] The optical receiver **111** accepts the signal provided by the fiber optic channel **109** and converts it into an electrical signal. The electrical signal, representing the trans-

mitted data, is provided to an OOK data decoder **113**. The data decoder **113** reverses the process of the encoder **103** and recreates the data provided by the data source **101**. The data from the decoder may be then routed, for example using a data router **115**, to various user devices. An exemplary user device **117** then receives data, such as video data, from the data router **115**.

[**0027**] **FIG. 2** is a block diagram of an optical communication system according to an embodiment of the invention. Transmitter **200** communicates with receiver **222** over channel **213**. In **FIG. 2** the data to be encoded is coupled into a trellis encoder **201**. The trellis encoder **201** includes convolutional coder **206** and subset mapper **203**. The trellis encoder **201** may be a single trellis encoder or it may be a series of trellis encoders in parallel.

[**0028**] The outputs of the convolutional coders **206** are further coupled into subset mappers **203**. A subset mapper accepts the convolutionally encoded signal and produces multilevel symbols **205** as an output. The multilevel symbols are then coupled into equalizers **207**. The equalizers **207** are used to compensate for the non-flat response of a channel **203**. After equalizing the multilevel symbols, the equalizers provide the resultant symbols to one or more digital to analog converters (D/A) **209**. The digital to analog converters **209** accept the equalized multilevel symbols, and convert them into analog signals. The analog signals are then coupled serially into an optical source such as a laser **211**. The digital to analog (D/A) converter(s) provide successive signals to laser **211** during a second time period, and so forth. In other words a signal from a first D/A converter may be provided to the laser **211** during a first time period, then a signal from a second D/A converter may next be provided to the laser **211**. In such a manner multiple symbols from multiple data sources may be transmitted by the single laser **211**. Alternatively, a single D/A converter may accept successive values from multiple data sources, converting them into a series of analog values to be used to modulate the intensity of the laser output **211**.

[**0029**] The output of the laser **211**, modulated by the analog representation of the multilevel symbols, is coupled into the optical channel **213**. The optical channel **213** transmits the intensity modulated laser signal to an optical-to-electrical converter **215**. The optical-to-electrical converter **215** accepts the optical signal from the channel **213** and converts it back to an intensity modulated series of electrical signals. The optical-to-electrical converter **215** then provides the amplitude-modulated signals to one or more analog-to-digital (A/D) converters **217**. The A/D converters converts the series of analog signals to digital signals. The digital signals are provided to one or more trellis decoders **219** where the trellis-encoded digital signals are decoded. The output of the trellis encoders are provided to a physical coding sublayer (PCS) unit **221**. A physical coding sublayer (PCS) may provide bit manipulation, such as decoding, to the signals decoded by the trellis decoder **219**. The data output of the PCS **221** is then provided to a user interface such as an XGMII (extended Gigabit Media Independent Interface).

[**0030**] Illustratively, the optical communication system depicted in **FIG. 2** has particular characteristics. For example, the channel **215** is considered to be a standard 62.5/125 μm fiber. Fiber is commonly specified in terms of a bandwidth times length product. For a 62.5/125μ meter fiber a typical bandwidth times length product is 500 MHz/km. 500 meters of such fiber would typically yield a 1 gigahertz bandwidth for a laser wavelength of 1310 nanometers.

[**0031**] To transmit a signal at or less than the Nyquist rate, the minimum bandwidth must equal one half of the symbol rate of the channel. The Nyquist bandwidth of a channel is the maximum rate at which signaling can occur on that channel without intersymbol interference (ISI). In other words, a system cannot transmit signals faster than the Nyquist rate without intersymbol interference. However, an equalizer such as **207** can be used to remove intersymbol interference. Equalization in **FIG. 2** is shown within the transmitter **200**. Such equalization is called transmit side equalization. Equivalently, equalization may be applied at the receiver **223**. For example, decision feedback equalization (DFE) may be used at the receiver **223**. Although the equalization can be done equivalently on the transmitter as well as the receiver side, there are certain advantages to placing the equalizer in the transmit side. For example, if the equalization is placed within the receiving side, the trellis decoder and an equalizer must function concurrently. Concurrent trellis decoding and equalization is a complication within the receiver that can be avoided by having the equalization circuit in the transmitter. It is difficult to combine an equalizer and a trellis decoder, in a receiver, because such a receiver would have to decode the trellis while attempting to compensate for the intersymbol interference. If the equalization is done in the transmitter, there is no necessity to compensate for intersymbol interference while decoding the trellis coding.

[**0032**] Embodiments of the present invention may include, for example, a single trellis encoder, a single symbol mapper, a single equalizer etc. Alternatively, the same components may be replicated multiple times the signals time multiplexed from such parallel components in order to couple them in and out of a single fiber channel. To simplify the disclosure, however, the components will be illustrated as single components. Those skilled in the art will realize that the same components may be used in a variety of parallel configurations.

[**0033**] For the purposes of example, the multilevel symbols **205** are considered to be part of a PAM-5 (pulse amplitude modulation-5 level) alphabet.

[**0034**] **FIG. 3** is a block diagram illustrating the fiber optic transmitter **200** according to an embodiment of the current invention. Detail of the transmitter **200** is illustrated in **FIG. 3**. The trellis encoder **323** accepts a group of R bits from the data source **202**. The trellis encoder **305** is a rate M/(M+1) convolutional coder of the R bits which are input to the rate m/(MH) encoder. R-M bits will be unencoded and M bits will be encoded. The output of the convolutional coder **305** comprises (M+1) bits. The R-M unencoded bits and the M+1 coded bits, which are output from the convolutional coder **305** are provided to a subset mapper **307**. The subset mapper **307** maps the received bits into a series of multilevel symbols **309**, for example, PAM 5. The combination of convolutional coder **305** and the R-M unencoded bits comprises a trellis encoder **323**.

[0035] The pulse amplitude modulated signals A_1 through AN have 5 levels, but may have any number of amplitude levels, depending on the pulse amplitude modulation scheme chosen.

[0036] The fiber optic channel, as discussed above, illustratively exhibits multimode transmission characteristics at any Nyquist bandwidth of 1 GHZ. Accordingly, the bandwidth available in the channel is smallerthan required to signal without intersymbol interference (ISI) at a 10 GHZ rate. To achieve the 10 GHZ signaling rate, the channel operates in the presence of intersymbol interference. One way to compensate for intersymbol interference is to use an equalizer in the receiver. For example, a decision feedback equalizer (DFE) may be used. The DFE is discussed in the receiver section.

[0037] A further way to compensate for the effect of intersymbol interference is to use a Tomlinson precoder **311**.

[0038] In **FIG. 3** multilevel symbols **309** are provided to a Tomlinson Precoder. For example in a 10 gigabit per second (GPS) transmission system implemented using a five level pulse amplitude modulation-5 level (PAM-5) transmission scheme. The baud rate necessary to achieve a 10 GPS transmission is reduced to five gigabaud because each PAM-5 symbol can represent five different values.

[0039] There are multiple advantages to reducing the baud rate by using pulse amplitude modulation. One advantage is that the system can operate over multimode and limited bandwidth channels over greater distances than would be possible if on/off keying (OOK) were used. Another advantage, of using PAM instead of OOK, is that the PAM symbols can represent multiple bits of information. Accordingly, the speed of the electronic circuits needed to create the transmitted signal at the transmitter is reduced. Consequently, the speed of the electric circuits needed at the receiver is also reduced. By reducing the required speed of the electronic circuits, technology such as CMOS (complimentary metal oxide semiconductor) may be used to implement the electronic circuitry. In contrast, high speed electronic circuits can often require expensive high speed technology such as gallium arsenide or indium phosphide. Because of the higher levels of integration presently available using CMOS, a greater level of integration is possible than with such technologies as gallium arsenide or indium phosphide, and so it is advantageous to use PAM symbols to decrease the signaling rate while keeping the baud rate constant.

[0040] A potential disadvantage of using multilevel encoding such as PAM-5, instead of the more traditional on/off keying, is that a higher signal to noise ratio (SNR) may be required of the channel since OOK needs to represent only two levels whereas PAM symbols are multiple levels. By using multiple levels the distance between levels is reduced, over using two levels. Because the distance between levels is reduced the available noise margin is also reduced. To reduce the required signal to noise ratio to a level equivalent to the OOK system, PAM-5 modulation may be combined with trellis coding as illustrated in the embodiment of the invention illustrated in **FIG. 3**.

[0041] In **FIG. 3 a** Tomlinson Harashima (Tomlinson) precoder **311** functions as a transmit side equalizer. A traditional equalizer in a receiver compensates for distortion and uneven frequency response caused by the transmission channel. Including the fiber on laser equalization, however, can be done equivalently in a receiver or a transmitter. In either case the result is a signal characteristic that, when combined with the channel characteristic, ideally results in a flat overall response.

[0042] A problem with attempting to equalize a fiber channel is that the fiber may exhibit nulls. In other words, the fiber channel transfer function permits very little signal transmission at a particular frequency. An equalizer, attempting to compensate for such nulls, may require an high gain to make up for the poor response of the channel. High gain may produce an unstable response in the equalizer.

[0043] Tomlinson Harashima precoding may be used to compensate for frequency nulls within the channel. The output of the Tomlinson precoder **311** is provided to a Digital Analog (D/A) converter **313**. The D/A converter produces an analog signal, which is used to modulate the intensity of the laser **211**. The Tomlinson precoder is shown as a simplified representation in **311**. The Tomlinson precoder **311** may actually be a group of Tomlinson precoders, each of which operates on one PAM-5 symbol. The PAM-5 symbols thus generated are multiplexed into the D/A converter **313**.

[0044] **FIG. 4** is a graphical illustration of Tomlinson-Harashima preceding (THP). In **FIG. 4**, Channel **411**A, which is identical to Channel **411**B, can be described by a Z transform. The characteristics of Channel **411**A and **411**B can be described by the expression "1+D(Z)." The term "D(Z)" term is responsible for the intersymbol interference exhibited by the channel. If it is desired to compensate for the characteristic of the channel within the transmitter, a filter with a transfer characteristic inverse of the channel must be added. By implementing a feedback loop comprising the summation unit **405**A and the feedback filter **407**A, a transfer characteristic of 1/(1+D(Z)) is created. The total response would then be 1/(1+D(Z)) times 1+D(Z) resulting in a net channel characteristic of one, which is the combined response of the precoder and the channel. The combined response of the precoder and the channel is therefore a flat response which does not introduce any dispersion, and therefore, the signal at the receiver **413**A is equalized.

[0045] Difficulties can be encountered because at frequencies where the channel has a lot of attenuation, the precoder will have a lot of gain to compensate for the attenuation. At such frequencies, the precoder may become unstable. Therefore, in order to stabilize the precoder and to limit the amplitude of the signal out of the precoder, a signal Vn represented by arrow **403** is added to the summation unit **405**A. $V_n=K_n \times M$ where M is the number of levels being transmitted on the channel. In the present embodiment, which uses PAM-5, M has a value of 5. M is essentially the maximum number of levels desired at the output. Once the output signal of the precoder, V_n is computed, if the signal exceeds certain limits then V_n is subtracted from the signal Y_n and K_n is the smallest integer that brings the output Y_n back into the desired range. There is always a value for K_n that will meet this condition. M is essentially the maximum allowable range of the output of the precoder. Depending on the value of Y_n there is a unique integer value K_n that will bring the output of the precoder back within the range M.

This is the basis of Tomlinson Harashima Precoding (THP). In other words, the THP does the inverse channel characteristic filtering then modifies the input to the summation unit by adding an integral multiple of M which at the output is bounded. The signal V_n is added to the input. The output of the channel sees a quantity equal to X_n plus V_n. In other words, the number of levels appearing at the receiver has been expanded. Therefore, the slicer in the receiver must be able to distinguish X_n+V_n levels instead of just being able to distinguish X_n levels. One price for doing this type of equalization is the increase of the number of levels in the constellation at the receiver. Therefore, all that needs to be done in the receiver to recover the original PAM-5 levels is to implement a wrap-around scheme such that the excess levels are wrapped around into the original PAM-5 levels. The wrap around is illustrated in **FIG. 4A**.

[**0046**] **FIG. 4A** is a graphical illustration of the mapping of excess pulse amplitude modulation levels produced by a THP, such as illustrated in **FIG. 4**. In **FIG. 4A,** 9 PAM constellation levels are present. The correct PAM-5 levels, that is **435**, **437**, **439**, **441** and **443** are present. In addition, levels **431** and **433** which are higher than the highest PAM level **445**, are present. Additionally, levels **445** and **447** are present which are lower than the lowest level **443** are present. In order to map the 9 levels back into the original 5 levels, a modulo type add or subtract is done. In other words, if the level out to be remapped are above the maximum levels, a modulo 5 value is subtracted. In the present case, 5 levels are subtracted from level **433**, and accordingly level **433** maps into level **443**. Similarly, 5 levels are subtracted from level **431** and level **431** maps into level **441**. Similarly level **445**, which is below the lowest level of **443**, has 5 levels added to it and level **445** is thereby mapped into level **435**. Similarly, level **447**, which is below the lowest level of **443**, has 5 levels added to it and is thereby remapped into level **437**. If for example 6 levels were present above level **435** then 10 would be subtracted from the 6th level and the 6th level above **435** would map into level **443**.

[**0047**] Referring to **FIG. 4** precoder **400**B illustrates an alternate method of adding the correction factor V_n to the precoder. In precoder **400**A signal Y_n is examined and then a value for K_n is decided on and the value V_n is then added or subtracted in the summation unit **405**A. In reality the operation of creating the adjustment value V_n is nothing more than a wrap around operation. The operation is comparable to the overflow in an accumulator. Therefore, in the precoder represented in **400**B modulo block **417** is added. In the modulo M block **417**, a wrap around operation is added to the precoder circuit and automatically accomplishes the adjustment accomplished by the summation fo the V_n signal in summation block **405**A in precoder **400**A.

[**0048**] One problem with Tomlinson preceding is that the number of levels in the receiver may grow depending on the channel characteristics. For example, in a PAM-5 system the number of levels may grow to 15, 20 or more. The proliferation of levels in the receiver may be a problem because within the receiver is an A/D converter sampling the multiple received levels. In order to accommodate multiple levels, the resolution of the A/D converter can be adversely impacted because the levels must be scaled so that they fit within the range of the A/D. That is, the resolution of an A/D converter discriminating between 5 levels is much better than the resolution of that same A/D converter discriminating 15 levels. Therefore, adding levels can require a better A/D converter, that is one having more bits of resolution. It is therefore desirable to limit the number of levels presented to the receiver. The number of levels that are presented to the receiver can be accomplished by limiting the value of K_n in precoder **400**A. Such limiting may lead to certain points falling outside of the allowed levels, however in return for the points falling outside of the allowed levels, the number of levels presented to the receiver can be limited. This form of THP is referred to as Dynamics Limited Precoding (DLP).

[**0049**] Precoding has several advantages over receiver side equalization. One advantage is that a precoder lends itself to a better parallel implementation than receive side equalization such as Decision Feedback Equalization (DFE). Another advantage of receiver side equalization is that when using trellis-coded modulation, preceding allows the trellis decoder to be substantially simplified, since the decoder then does not have to deal with intersymbol interference. The combination of preceding with trellis coded modulation can approach the Shannon bound for channel capacity when good modulation codes are used. Therefore, the present architecture can provide a close to optimal architecture.

[**0050**] **FIG. 5** is a block diagram of a receiver, according to an embodiment of the invention, illustrating the decoding of multiple signals transmitted across the same channel. In **FIG. 5, a** photo detector **501** accepts a pulse amplitude modulated signal from the fiber optic channel **109**. The photo detector **501** then provides a voltage signal, representative of the signal received from the fiber optic channel **109**, to a pre-amplifier **503**. The pre-amplifier **503** amplifies the signal provided by the photo detector **501** to a suitable level. Pre-amplifier **503** then provides the amplified signal to a high pass filter **505**.

[**0051**] High pass filter **505** functions to prevent a phenomenon known as baseline wander. High pass filtering the input signal blocks low frequencies thus minimizing low frequency excursions. Photo detector **501**, pre-amplifier **503** and high pass filter **505** generally define the optical receiver **111**. The boundaries, however, between the optical receiver and decoder are somewhat arbitrary and other sources may define boundary line between these blocks differently.

[**0052**] The output of high pass filter **505** is provided to a programmable gain amplifier (PGA) **507**. The gain of the PGA **507** is controlled by an automatic gain control (AGC) circuit **508**. AGC circuit **508** controls the gain of the amplifier **507** according to signal levels at the output of the retiming block **511**. The signal at the output of the PGA **507** comprises a series of high speed pulse amplitude modulated voltage signals. The output of the programmable gain amplifier **507** is coupled into a plurality of interleaved analog to digital converters **509**.

[**0053**] The analog to digital converters (A/D) **509** are timed by a clock provided by the timing recovery circuit **515**. Each A/D converter, however, receives its own phase of the clock in order to sample successive values using successive A/D converters. Because the values received by the A/D converters are sampled using a clock having different phases, retiming of the signals is necessary in order to create a synchronized parallel value. The retiming of the A/D samples takes place in retiming block **511**. Retiming block **511** essentially comprises a clocked register circuit or

equivalent. By interleaving N A/D converters in the analog to digital block **509**, the clock rate of each individual converter can be reduced by a factor of N (over the use of a single converter). Without the interleaving of analog to digital converters **509** it may be difficult or impossible to fabricate an analog to digital converter, which could sample the input at a high enough rate, in order not to lose any successive values in the input data stream. By interleaving the A/D converters the necessity of using very high speed circuit technologies, such as gallium arsenido or indium phosphide may be avoided.

[**0054**] Parallel values from the retiming block **511** are provided to a fine AGC module **513**. The digital values of the synchronized parallel data can be examined in the fine AGC modules to determine whether the amplitude of the input signal is correct and to provide fine adjustments to the signal values. The timing recovery block **515** may adjust the timing of the analog to digital converters.

[**0055**] The output of the fine AGC block **513** is coupled into an N-dimensional trellis decoder **519**. An N-dimensional trellis decoder includes N trellis decoders. The number of trellis decoders will vary depending on a variety of implementation details. The N-dimensional trellis decoder **519** decodes the symbols accepted from the fine AGC module **513** and converts them into digital data values.

[**0056**] Once the PAM-5 symbols have been decoded into bit patterns, they are provided to a physical coding sublayer (PCS) **521**. The physical coding sublayer **521** provides bit manipulation, such as signal descrambling, etc. The physical coding sublayer **521** then provides a resultant bit stream to a system interface **523**.

[**0057**] **FIG. 6** is a simplified block diagram of a receiver such as that illustrated in **FIG. 5** illustrating the addition of a DFE. The DFE in the receiver may be used instead of a Tomlinson precoder in the transmitter. Because equalization can be done equivalently in the receiver or transmitter the net equalization effect is the same.

[**0058**] The block diagram of **FIG. 6** does not illustrate the parallelism of the receiver illustrated by **FIG. 5**. **FIG. 6**, however does provide detail on the addition of equalization, which may be included in the receiver. A photonic signal is accepted by the detector **601**. The detector **601** converts the received signal into a voltage and then provides the voltage signal to pre-amplifier **603**. Pre-amplifier **603** amplifies the signal and provides it to high pass filter **605**. A programmable gain amplifier **607** accepts the signal from the high pass filter **605** and provides it to an A/D converter **609**.

[**0059**] The A/D converter **609** converts the analog signal from the high pass filter into a digital equivalent. An AGC block **608** accepts the digital value from the A/D converter **609** and controls the gain of the programmable gain amplifier (PGA) **607**. The output of the analog to digital converter **609** is also provided to a fine AGC **613**, where small adjustments in the signal are made. The output of the fine AGC **613** is then provided to a decision feedback equalizer **625**. In order to explain the operation of a decision feedback equalizer reference will be made to **FIG. 7**.

[**0060**] **FIG. 7** is a graphical illustration of the impulse response of an exemplary fiber channel. In **FIG. 7**, point **719** represents a decision point where the value of the waveform **729** is sampled. Since the input waveform is an impulse, by definition only one value (represented by point **719**) is provided to the channel. Therefore any subsequent response such as values **721**, **723**, **725** or **727** do not represent valid values which have been provided to the channel. Values **721**, **723**, **725** and **727** instead represent intersymbol interference caused by the impulse function. Samples **721**, **723**, **725** and **727** may be caused by the dispersion of the impulse waveform within a multimode fiber and are an undesirable feature of the fiber channel. They are generally caused by the differing propagation times of the impulse through different modes of the fiber. An equalizer, such as the illustrated DFE **625** may compensate for the distortion introduced by samples such as **721**, **723**, **725** and **727**. The decision feedback equalizer uses an adaptive transversal filter **711** to generate a waveform equivalent to the trailing edge **731** of the impulse response. The trailing edge, represented by **731**, is the portion of the waveform immediately after the sampled point **719** which includes spurious response points **721**, **723**, **725** and **727**. The portion of the waveform **719** represents the spurious response of the channel. The adaptive transversal filter **623** makes a copy of the spurious response and subtracts it from the overall channel response in summation unit **619**. The adaptive transversal filter is termed adaptive because it must adapt itself to the characteristics of the channel. In other words, the adaptive transversal filter must be trained using the channel characteristics in order to derive the proper response that will be provided to the summation unit **619**. Once the slicer **621** detects which symbol is present, the adaptive transversal filter can then provide the response necessary to cancel the intersymbol interference present that would accompany the transmitted point.

[**0061**] The received waveform at a point prior to the summation unit **619** is shown on oscilloscope **615** as display **615**A. Display **615**A is a scatter type waveform that does not exhibit distinct levels. The waveform **631** may be generated by the adaptive transversal filter **611**, in order to cancel the intersymbol interference (ISI) within the channel.

[**0062**] Once the intersymbol interference is subtracted from the incoming signal in summation unit **619**, the output of the summation unit appears as shown on oscilloscope **617**, in display **617**A. Display **617**A represents an eye diagram having five discrete levels. Once the levels have been well defined, as seen on display **617**A, the slicer **621** is able to distinguish relatively easily between the symbols. The adaptive transversal filter **623** will respond to whatever symbol is found by the slicer **623** and provide the necessary waveform to cancel the intersymbol interference caused by the found symbol's transmission. The transversal filter generating an intersymbol interference replica, which must be subtracted from the incoming signal. The intersymbol interference waveform changes, depending on which symbol has been found by the slicer. The output of the decision feedback equalizer depends on the previously decoded symbols. The PAM-5 symbols found are then decoded by the Physical Coding Sublayer (PCS) **521** and then provided to an interface such as a XGMII interface (not shown).

[**0063**] To further set forth the inventive concepts, a preliminary simulation study of a PAM-5 system is discussed. To simulate the PAM-5 system a laser model was created using rate equations. Pseudo-random PAM-5 data was introduced to the laser model. The output from the laser model was provided to fiber model. The fiber modeled was a

multimode type fiber modeled as a linear system with Gaussian Impulse Response. In one example a 62.5/125 μm fiber having a bandwidth of 1 GHZ conveys a loss nanometer signal.

[**0064**] The Nyquist theorem establishes that the bandwidth needed to transmit data at a rate F_b=1/T, without intersymbol interference, must be larger than or equal to ½ T. Many communication systems however, signal at rates faster than 0.5 F_b, using special techniques to control the intersymbol interference. Such techniques have been used in the 100Base-TX and 1000Base-T Ethernet transceivers. The present model examines signaling at 5 GBaud over multimode fibers with 1 GHZ bandwidth. The present simulations contemplate signaling at 2.5 times the Nyquist rate (data rate equals 10 Gb/s, baud rate F_b=5 GHZ, bandwidth equals 1 GHZ). This bandwidth assumption is consistent with 500 meters of 160/500 MHz-KM fiber at 1350 nanometers (nm), or 160 meters of the same fiber at 850 nm.

[**0065**] The model also assumes a receiver having a DFE as illustrated in **FIG. 6**. It is recognized that equivalent equalization can be accomplished at the transmitter through the use of THP, DLP or other equalization techniques.

[**0066**] The rate equations used in modeling the laser are described in "On Approximate Analytical Solutions of the Rate Equations for Studying Transient Spectra of Injection Lasers", by D. Marcuse and T. P. Lee, IEEE Journal of Quantrum Electronics, September 1983. The equations of the computer model are solved numerically using a fourth order Runge-Kutta Algorithm. The bias current in the equations was set to three times $I_{threshold}$. In addition, a 6dB extinction ratio is used.

[**0067**] **FIG. 8** is a block diagram illustrating a channel model used in conjunction with the rate equations. In **FIG. 8, a** pseudo-random PAM-5 symbol generator **801** provides symbols to the laser model **803**. The output of the laser model is then provided to a multimode fiber model **805**. The fiber model **805** is a linear system having a Gaussian impulse response.

[**0068**] **FIG. 9** is a graphic representing the impulse response of a linear system having a Gaussian impulse response convolved with a single pole high pass filter with corner frequency of 200 MHz. For the simulation, the fiber channel is modeled as in an article "Equalization of Multimode Optical Fiber Systems," by B. L. Kaspers, Bell Systems Technical Journal, September 1982. The Kaspers' model comprises a linear dispersive system with a Gaussian impulse response given by equation 1. Such Gaussian impulse response models are common throughout the literature and are considered to be fairly accurate for fibers in which all modes are excited equally (i.e. multimode fibers in an overfill launch condition).

$$h(t) = \frac{1}{\sqrt{2\pi}\cdot\alpha T}\cdot e^{-[t^2/(2(\alpha T)^2)]} \qquad \text{(Equation 1)}$$

[**0069**] Where T is the period and a is a system dependent variable related to the bandwidth of the fiber. The corresponding frequency response of the channel is given by equation 2.

$$H(f)=e^{-[(2\pi\alpha TF)^2/2]} \qquad \text{(Equation 2)}$$

[**0070**] The 3 dB bandwidth of the fiber is given by a equation 8 for a given baud period equal to 300 pico seconds.

$$f_{3dB} = \frac{0.1325}{\alpha T} \qquad \text{(Equation 3)}$$

[**0071**] If the 3 dB bandwidth of the system is assumed to be one gigahertz, the value of is equal to 0.6625.

[**0072**] **FIG. 10** is a graph illustrating the output of a laser model based on the rate equations. The vertical axis **1001** represents the intensity of the laser.

[**0073**] As can be seen from **FIG. 10**, the signal appears to be somewhat noisy. The noise is partially accounted for by relaxation oscillation of the laser. Each time there is a sharp transition in the laser signal, overshoot and ringing results, as depicted in the graph of **FIG. 10**.

[**0074**] **FIG. 11** is a magnified portion of the graph of **FIG. 10**. **FIG. 11** is included to illustrate the ringing present within the waveform of **FIG. 10**.

[**0075**] **FIG. 12** is a graph of the waveform of **FIG. 10** after passage through the fiber channel model. In other words, **FIG. 12** is an illustration of the waveform presented to the receiver. As can be readily appreciated by observing **FIGS. 10 and 12**, the fiber channel performs significant filtering on the output of the laser. In other words, FIG. **12** is a convolution of the waveform in **FIG. 10** with the impulse response of the channel as illustrated in **FIG. 9**.

[**0076**] **FIG. 13** is an eye diagram of a simulated equalizer at the transition between a training mode and receiving PAM-5 symbols.

[**0077**] The simulated signal of **FIG. 12** is introduced to a receiver in **FIG. 13**. The receiver used is one such as illustrated in **FIG. 6**. The eye diagram depicted in **FIG. 13** is the output of the decision feedback equalizer **625** of **FIG. 6**. The portion of the graph in **FIG. 13** delineated by **1301** represents a scatter diagram equivalent to the display **615**(*a*) of **FIG. 6**. The scatter diagram results after data has begun entering the receiver and being processed by the slicer but the equalizer has not yet been trained. In other words, the adaptive transversal filter has not yet adapted to the characteristics of the channel. A portion of the graph illustrated at **1303** in **FIG. 13** is an illustration of the equalizer being trained using two level symbols. At point **1315**, within **FIG. 13**, the five level Pam alphabet is transmitted to the receiver. The results of the receiving of the five level Pam-5 alphabet in the trained decision feedback equalizer **625** is the five levels **1305**,**1307**,**1309**,**1311**, and **1313** depicted in **FIG. 13**.

[**0078**] **FIG. 14** is a graph of a magnified portion of the graph of **FIG. 13**, illustrating the convergence of the equalizer during a training sequence.

[**0079**] **FIG. 14** is a time expansion of the section **1301** of **FIG. 13**. As can be seen from **FIGS. 13 and 14**, high data rates can be achieved using pulse amplitude modulation despite the presence of inner symbol interference, which may result from signaling faster than the Nyquist rate.

[0080] As can be seen from the models used to simulate the PAM-5 system transmitting data a faster than the Nyquist rate is viable using the techniques disclosed. Additionally using multilevel symbols has been shown to be viable and may be used to increase the data rate across fiber channels. The reduced noise tolerance of the system due to the reduced distance between signaling levels of a multilevel signaling system may be counteracted by the use of trellis coding the signals transmitted.

[0081] Supplemental material with regard to the invention here and above described in Appendix A entitled "10 Gb/s PMD Using PAM-5 Trellis Coded Modulation".

What is claimed is:

1. A method for high-speed transmission of information data on an optical channel, the method comprising:

encoding information via a trellis encoder to produce digital multilevel symbols;

converting the digital multilevel symbols into analog multilevel signals; and

transmitting the analog multilevel symbols over an optical channel.

2. The method of claim 1 further comprising equalizing the digital multilevel symbols to compensate for characteristics of the optical channel.

3. The method of claim 1 further comprising of equalizing the analog multilevel symbols to compensate for characteristics of the optical channel.

4. The method of claim 2 wherein equalizing the digital multilevel symbols comprises preceding the digital multilevel symbols using a Tomlinson Harashima precoder.

5. The method of claim 2 wherein the equalizing the digital multilevel symbols comprises preceding the digital multilevel symbols using a dynamic limiting precoder.

6. The method of claim 1 wherein the converting the digital multilevel symbols to analog multilevel symbols includes mapping the digital multilevel symbols into a subset mapper.

7. The method of claim 1 wherein transmitting the analog multilevel symbols over an optical channel comprises modulating the intensity of a light source according to the level of the analog multilevel symbols.

8. The method of claim 1 wherein transmitting the analog multilevel symbols over an optical channel comprises modulating laser intensity according to a level of the analog multilevel symbols.

9. A method as in claim 2 wherein equalizing the digital multilevel symbols to compensate for the laser and channel characteristics comprises:

characterizing the channel; and

applying an inverse characterization of the channel to the digital multilevel symbols.

10. A method as in claim 2 wherein equalizing the digital multilevel symbols to compensate for the laser and channel characteristics comprises:

characterizing the channel; and

applying an inverse characterization of the channel to the analog multilevel symbols.

11. A method for high speed transmission on an optical channel, the method comprising:

accepting information from a plurality of sources;

encoding the information via a plurality of trellis encoders to produce a plurality of digital multilevel symbols;

converting the plurality of digital multilevel symbols into a plurality of analog multilevel signals; and

transmitting the analog multilevel signal by time division multiplexing the plurality of analog multilevel signals onto an optical channel.

12. A method as in claim 11 wherein converting the plurality of digital multilevel symbols to analog multilevel signals further comprises:

mapping the digital multilevel symbols in a subset mapper; and

forming analog multilevel symbols by providing analog representations of mapped multilevel signals.

13. The method of claim 11 further comprising equalizing the plurality of digital multilevel symbols to compensate for characteristics of the optical channel.

14. The method of claim 11 further comprising equalizing the plurality of analog multilevel symbols to compensate for characteristics of the optical channel.

15. The method of claim 13 wherein equalizing the digital multilevel symbols comprises preceding the plurality of digital multilevel symbols using a Tomlinson Harashima precoder.

16. The method of claim 12 wherein equalizing the digital multilevel symbols comprises preceding the plurality of digital multilevel symbols using a dynamic limiting precoder.

17. The method of claim 11 wherein converting the plurality of digital multilevel symbols into a plurality of analog multilevel symbols further comprises:

accepting the plurality digital multilevel symbols into a subset mapper; and

forming a plurality of mapped analog multilevel symbols from the plurality of digital multilevel symbols.

18. The method of claim 11 wherein transmitting the plurality of analog multilevel symbols over an optical channel comprises modulating the intensity of a light source according to the levels of the plurality of analog multilevel symbols.

19. The method of claim 11 wherein transmitting the plurality of analog multilevel symbols over an optical channel comprises modulating the intensity of a laser according to the level of the analog multilevel symbols.

20. The method as in claim 12 wherein equalizing the digital multilevel symbols to compensate for the laser and channel characteristics comprises:

characterizing the channel; and

applying an inverse characterization of the channel to the digital multilevel symbols.

21. The method as in claim 12 wherein equalizing the digital multilevel symbols to compensate for the laser and channel characteristics comprises:

characterizing the channel; and

applying an inverse characterization of the channel to the plurality of analog multilevel symbols.

22. The method as in claim 11 wherein converting the plurality of digital multilevel symbols into a plurality of analog multilevel signals comprises:

accepting the plurality digital multilevel symbols successively into a single analog to digital converter; and

successively converting the plurality of symbols into analog multilevel symbols.

23. The method as in claim 11 wherein converting the plurality of digital multilevel symbols into a plurality of analog multilevel signals comprises:

accepting the digital multilevel symbols successively into a plurality of analog to digital converters;

converting the plurality of symbols into an analog representation; and

successively combining the analog multilevel symbols into a succession of analog multilevel symbols.

24. A method of receiving data from an optical channel the method comprising:

accepting a multilevel signal from the channel into an optical to electrical converter;

converting the multilevel signal into an analog electrical signal;

converting the analog electrical signal into a digital signal; and

decoding the digital signal in a trellis decoder.

25. The method of claim 24 further comprising equalizing the digital signal prior to decoding the digital signal in the trellis decoder.

26. The method of claim 25 wherein equalizing the digital signal comprises applying a decision feedback equalization to the digital signal.

27. A method as in claim 24 wherein converting the analog electrical signal to a digital signal comprises:

successively sampling the analog electrical signal; and

converting the successive samplings into a plurality of parallel digital values.

28. A method of signaling over an optical channel the method comprising:

accepting data from a source;

trellis encoding the data;

coupling the encoded data into an optical channel;

conveying the data over the optical channel;

accepting data from the optical channel decoding the data accepted from the optical channel; and

providing the decoded data to an interface.

29. A method as in claim 28 further comprising:

equalizing the data after trellis encoding the data.

30. A method as in claim 29 wherein equalizing the data comprises applying a Tomlinson-Harashima preceding to the data.

31. A method as in claim 30 wherein equalizing the data comprises applying a dynamic limited preceding.

32. An apparatus for transmitting information on an optical channel to apparatus comprising:

a trellis encoder for accepting digital information and producing digital multilevel signals;

a digital to analog converter that accepts the digital multilevel signals and produces analog multilevel signals; and

an analog signal to optical converter that converts the analog signal to an optical level for coupling into an optical channel.

33. The apparatus of claim 32 further comprising an equalizer that accepts the digital multilevel signals and produces equalized digital multilevel signals prior to coupling into the digital to analog.

34. The apparatus of claim 32 further comprising an equalizer that accepts the analog multilevel signals and produces equalized analog multilevel signals.

35. An apparatus as in claim 33 wherein the equalizer is a Tomlinson-Harashima precoder.

36. An apparatus as in claim 33 wherein the equalizer is a dynamic limiting precoder.

37. An apparatus as in claim 32 wherein the analog signal to optical level converter includes a laser.

38. An apparatus for concurrently transmitting a plurality of data signals over an optical channel, the apparatus comprising:

a plurality of trellis encoders that accept a plurality of data signals and produce a plurality of digital multilevel signals;

a converter that accepts a plurality of digital multilevel signals and produce a plurality of analog multilevel signals;

an optical source that receives the plurality of analog multilevel signals and produces a light output proportional to the level of successive analog multilevel signals for driving an optical channel.

39. An apparatus as in claim 38 further comprising a plurality of equalizers that accept the plurality of digital multilevel signals and produce a plurality of equalized digital multilevel signals to provide to the converter.

40. An apparatus as in claim 39 wherein the plurality of equalizers comprise a plurality of Tomlinson-Harashima precoders.

41. An apparatus as in claim 39 wherein the plurality of equalizers comprise a plurality of dynamic limiting precoders.

42. An apparatus for concurrently transmitting a plurality of data signals over an optical channel the apparatus comprising:

a plurality of trellis encoders that accept a plurality of data signals and produce a plurality of digital multilevel signals;

an analog to digital converter that sequentially accepts the plurality of digital multilevel signals and produces a plurality of sequential analog multilevel signals;

an optical source that receives the plurality of analog multilevel signals for driving an optical channel.

43. An apparatus as in claim 38 further comprising a plurality of equalizers that accept the plurality of digital multilevel signals and produce a plurality of digital multilevel signals.

44. An apparatus as in claim 43 wherein the plurality of equalizers comprise a plurality of Tomlinson-Harashima precoders.

45. An apparatus as in claim 43 wherein the plurality of equalizers comprise a plurality of dynamic limiting precoders.

46. An apparatus for receiving data from an optical channel the apparatus comprising:

an optical to electrical converter for receiving an optical multilevel signal from an optical channel and converting the optical multilevel signal into an analog multilevel electrical signal;

a decoder that accepts the analog multilevel electrical signal and converts it into digital multilevel signal;

a trellis decoder that accepts and decodes the digital multilevel signal producing data.

47. The apparatus of claim 46 further comprising an equalizer for accepting the digital multilevel signal and producing a digital equalized multilevel signal for coupling into the trellis decoder.

48. An apparatus as in **47** wherein the equalizer is a decision feedback equalizer.

* * * * *