US006873800B1

(12) **United States Patent**
Wei et al.

(10) **Patent No.: US 6,873,800 B1**
(45) **Date of Patent: Mar. 29, 2005**

(54) **HOT PLUGGABLE OPTICAL TRANSCEIVER IN A SMALL FORM PLUGGABLE PACKAGE**

(75) Inventors: **Cheng Ping Wei**, Gilbert, AZ (US); **Edwin D. Dair**, Los Angeles, CA (US)

(73) Assignee: **JDS Uniphase Corporation**, San Jose, CA (US)

(*) Notice: Subject to any disclaimer, the term of this patent is extended or adjusted under 35 U.S.C. 154(b) by 736 days.

(21) Appl. No.: **09/656,779**

(22) Filed: **Sep. 7, 2000**

Related U.S. Application Data

(63) Continuation-in-part of application No. 09/321,308, filed on May 27, 1999, and a continuation-in-part of application No. 09/320,409, filed on May 26, 1999.

(51) **Int. Cl.**[7] **H04B 10/00**
(52) **U.S. Cl.** **398/138**; 385/14
(58) **Field of Search** 398/128, 130, 398/135, 138; 385/14, 31, 39, 40, 88, 92, 93, 94

(56) **References Cited**

U.S. PATENT DOCUMENTS

3,792,284	A	2/1974	Kaelin
3,809,908	A	5/1974	Clanton
3,870,396	A	3/1975	Racki et al.
3,976,877	A	8/1976	Thillays
4,149,072	A	4/1979	Smith et al.
4,161,650	A	7/1979	Caouette et al.
4,229,067	A	10/1980	Love
4,273,413	A	6/1981	Bendikens et al.
4,347,655	A	9/1982	Zory et al.
4,419,072	A	12/1983	Nakagawa et al.
4,432,604	A	2/1984	Schwab
4,446,515	A	5/1984	Sauer et al.
4,449,244	A	5/1984	Kopainsky
4,461,537	A	7/1984	Raymer, II et al.
4,493,113	A	1/1985	Forrest et al.

(List continued on next page.)

FOREIGN PATENT DOCUMENTS

EP 0 652 696 A1 11/1994

OTHER PUBLICATIONS

R.T. Chen and P.S. Gulfoyle (Eds.) Optoelectronic Interconnects and Packaging, Critical Reviews, vol. CR62 (1996), pp. 48–63, 64–67, 229–243, 393–404, 405–414, 442–460, Spic Optical Engineering Press, Washington.

(List continued on next page.)

Primary Examiner—Jason Chan
Assistant Examiner—Agustin Bello
(74) *Attorney, Agent, or Firm*—Allen, Kyer, Doppelt, Milbrath & Gilchrist, P.A.

(57) **ABSTRACT**

A fiber optic module for transferring data as pulses of light has an optical element with a first light transducer having a straddle mount lead and a second light transducer having a formed or bent signal lead. A first fiber optic receptacle optically couples to the first light transducer and a second fiber optic receptacle optically couples to a second light. A printed circuit board subassembly includes first and second printed circuit boards with an interconnection therebetween to couple to an electrical connector on the first. The first printed circuit board and second printed circuit boards are aligned so that the straddle mount leads couple to contacts on the first and the formed signal lead couple to contacts on the second. One or more electrical components in the fiber optic module process data for communication using light or photons over one or more optical fibers. An outer housing encloses the optical element subassembly and the printed circuit board subassembly. The electrical connector couples external electrical signals to the electrical components.

20 Claims, 6 Drawing Sheets

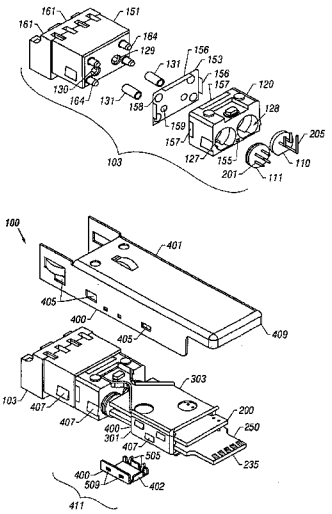

Nokia of America Corporation
IPR2023-00681, Ex. 1006
Ex. 1006.1

U.S. PATENT DOCUMENTS

4,533,209 A 8/1985 Segerson et al.
4,534,616 A 8/1985 Bowen et al.
4,535,233 A 8/1985 Abraham
4,539,476 A 9/1985 Donuma et al.
4,542,076 A 9/1985 Bednarz et al.
4,549,782 A 10/1985 Miller
4,549,783 A 10/1985 Schmachtenberg, III
4,553,811 A 11/1985 Becker, deceased et al.
4,580,295 A 4/1986 Richman
4,595,839 A 6/1986 Braun et al.
4,612,670 A 9/1986 Henderson
4,625,333 A 11/1986 Takezawa et al.
4,647,148 A 3/1987 Katagiri
4,678,264 A 7/1987 Bowen et al.
4,720,630 A 1/1988 Takeuchi et al.
4,727,248 A 2/1988 Meur et al.
4,807,955 A 2/1989 Ashman et al.
4,840,451 A 6/1989 Sampson et al.
4,844,581 A 7/1989 Turner
4,856,091 A * 8/1989 Taska 398/166
4,881,789 A 11/1989 Levinson
4,897,711 A 1/1990 Blonder et al.
4,912,521 A * 3/1990 Almquist et al. 398/117
4,913,511 A 4/1990 Tabalba et al.
4,945,229 A 7/1990 Daly et al.
4,979,787 A 12/1990 Lichtenberger
4,986,625 A 1/1991 Yamada et al.
4,989,934 A 2/1991 Zavracky et al.
5,005,939 A 4/1991 Arvanitakis et al.
5,011,246 A 4/1991 Corradetti et al.
5,039,194 A 8/1991 Block et al.
5,043,775 A 8/1991 Lee
5,093,879 A 3/1992 Bregman et al.
5,099,307 A 3/1992 Go et al.
5,104,243 A 4/1992 Harding
5,109,453 A 4/1992 Edwards et al.
5,109,454 A * 4/1992 Okuno et al. 385/92
5,117,476 A 5/1992 Yingst et al.
5,122,893 A 6/1992 Tolbert
5,136,152 A 8/1992 Lee
5,155,786 A 10/1992 Ecker et al.
5,168,537 A 12/1992 Rajasekharan et al.
5,202,943 A 4/1993 Carden et al.
5,241,614 A 8/1993 Ecker et al.
5,259,054 A 11/1993 Benzoni et al.
5,280,191 A 1/1994 Chang
5,285,512 A 2/1994 Duncan et al.
5,289,345 A 2/1994 Corradetti et al.
5,295,214 A 3/1994 Card et al.
5,337,391 A 8/1994 Lebby
5,337,396 A 8/1994 Chen et al.
5,337,398 A 8/1994 Benzoni et al.
5,345,524 A 9/1994 Lebby et al.
5,361,244 A 11/1994 Nakamura et al.
5,414,787 A 5/1995 Kurata
5,416,668 A 5/1995 Benzoni
5,416,870 A 5/1995 Chun et al.
5,416,871 A 5/1995 Takahashi et al.
5,416,872 A 5/1995 Sizer, II et al.
5,428,704 A 6/1995 Lebby et al.
5,432,630 A 7/1995 Lebby et al.
5,434,747 A 7/1995 Shibata
5,446,814 A 8/1995 Kuo et al.
5,452,387 A 9/1995 Chun et al.
5,455,703 A 10/1995 Duncan et al.
5,462,630 A 10/1995 Murakami
5,473,715 A 12/1995 Schofield et al.
5,475,783 A 12/1995 Kurashima
5,482,658 A 1/1996 Lebby et al.
5,499,311 A 3/1996 DeCusatis
5,499,312 A 3/1996 Hahn et al.
5,515,468 A 5/1996 DeAndrea et al.
5,519,190 A 5/1996 Aoki
5,528,408 A * 6/1996 McGinley et al. 398/139
5,535,296 A 7/1996 Uchida
5,537,391 A 7/1996 Ishikawa
5,546,281 A 8/1996 Poplawski et al.
5,548,677 A 8/1996 Kakii et al.
5,550,941 A 8/1996 Lebby et al.
5,561,727 A 10/1996 Akita et al.
5,596,663 A 1/1997 Ishibashi et al.
5,636,298 A 6/1997 Jiang et al.
5,687,267 A 11/1997 Uchida
5,708,743 A 1/1998 DeAndrea et al.
5,717,533 A 2/1998 Poplawski et al.
5,734,558 A 3/1998 Poplawski et al.
5,736,782 A 4/1998 Schairer
5,751,471 A 5/1998 Chen et al.
5,767,999 A 6/1998 Kayner
5,774,614 A 6/1998 Gilliland et al.
5,778,127 A 7/1998 Gilliland et al.
5,812,582 A 9/1998 Gilliland et al.
5,812,717 A 9/1998 Gilliland et al.
5,864,468 A 1/1999 Poplawski et al.
5,879,173 A 3/1999 Poplawski et al.
6,061,493 A 5/2000 Gilliland et al.
6,071,017 A 6/2000 Gilliland et al.
RE63,820 8/2000 McGinley et al.
6,369,924 B1 * 4/2002 Scharf et al. 398/117

OTHER PUBLICATIONS

R.G. Hunsperger, Integrated Optics: Theory and Technology (2nd Ed.), 1985, pp. 89–106, 236–245, Springer–Verlag Berlin Heidelberg, Germany.

A. Chatak and K. Thyagarajan, Introduction to Fiber Optics, 1998, pp. 411–413, 447–449, 467–473, Cambridge University Press, United Kingdom.

R.C. Dorf, Electrical Engineering Handbook, 1993, pp. 1682–1684, CRC Press, Inc., Florida.

Buczynski, et al., Fast Optical Thresholding with an Array of Optoelectronic Transceiver Elements, IEEE Photonics Technology Letters, vol. 11, No. 3, Mar. 1999.

Heinrich, et al., Low–Cost VCSEL–Transceiver Module for Optical Data Busses, IEEE, 1997.

Rosinski, et al., Multichannel Transmission of a Multicore Fiber Coupled with Vertical–Cavity Surface–Emitting Lasers, Journal of Lightwave Tech., vol. 17, No. 5, May 1999.

Crow, et al., The Jitney Parallel Optical Interconnect, 1996 Electronic Components and Technology Conference.

* cited by examiner

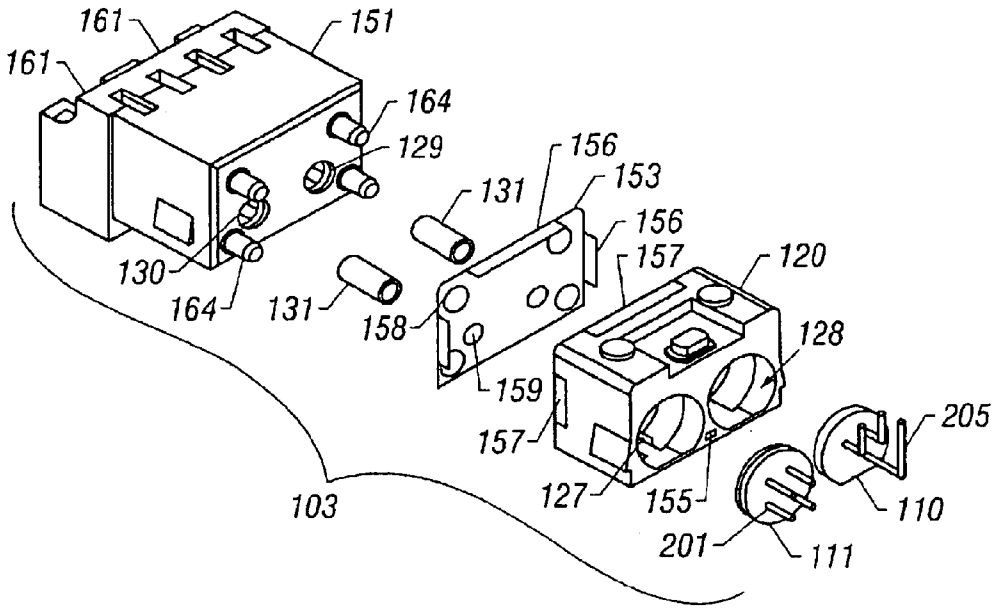
161
161
151
164
129
156
153
131
156
157
120
130
164
131
158
128
159
157
205
127
155
110
103
201
111

FIG. 1

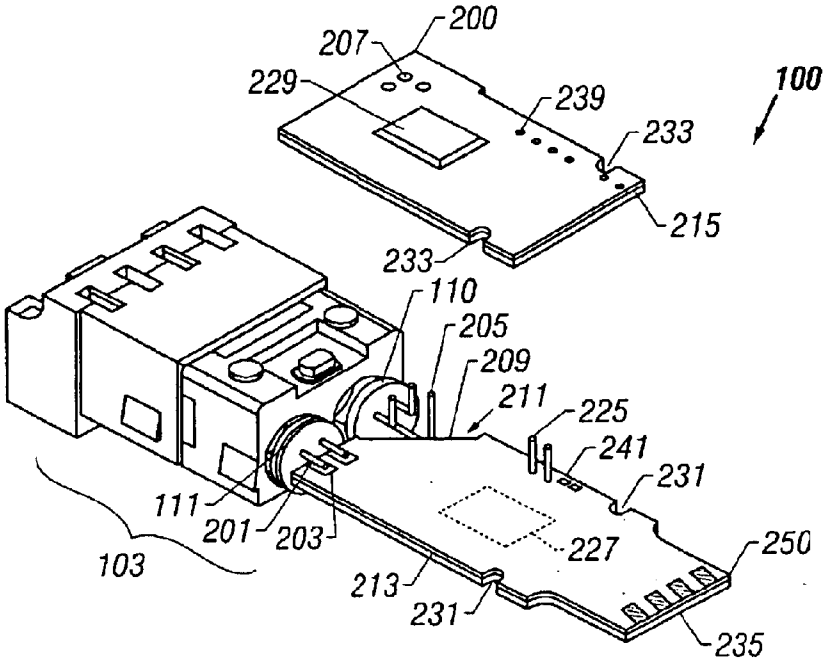
200
207
229
239
100
233
215
233
110
205
209
211
225
241
231
111
201
203
227
250
103
213
231
235

FIG. 2

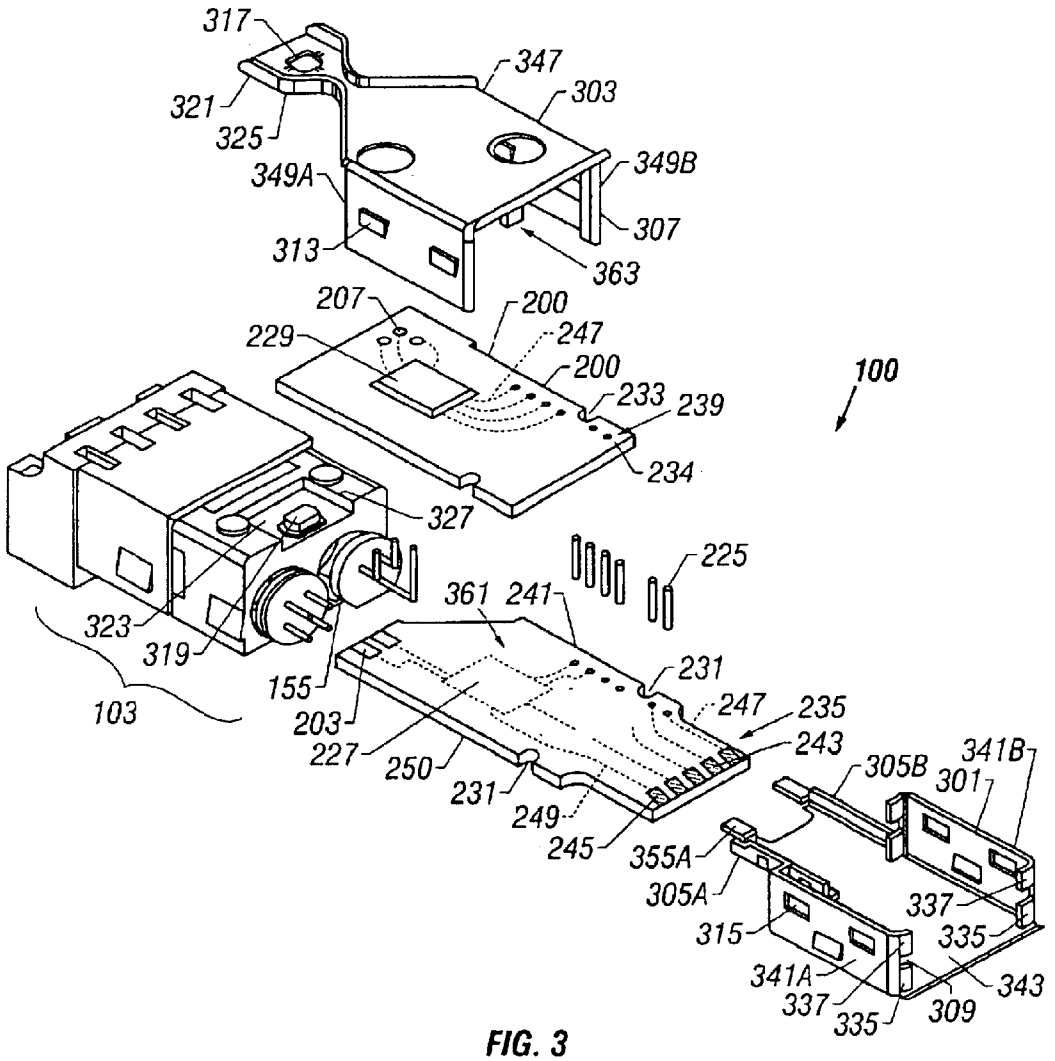
317
347
303
321
325
349A
349B
307
313
363
207
200
229
247
200
233
239
100
234
327
225
361
241
323
319
231
155
247
235
103
203
243
227
250
305B
341B
301
231
249
245
355A
305A
337
315
335
341A
343
337
309
335

FIG. 3

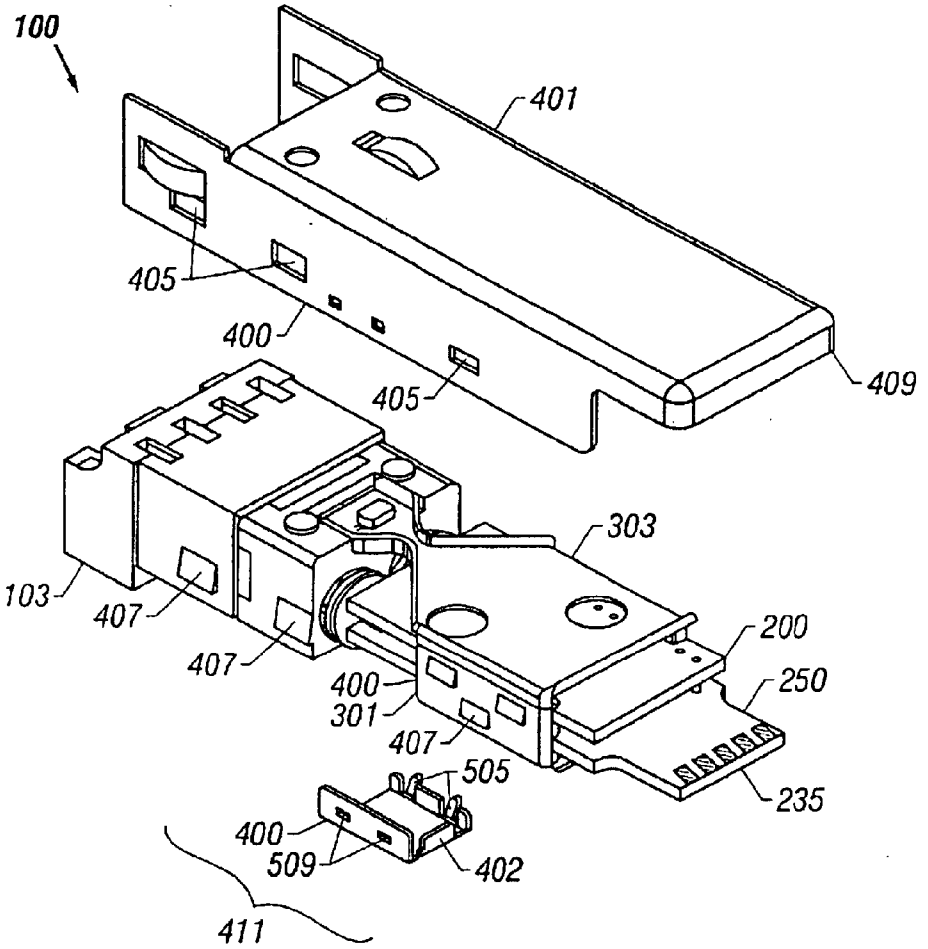

FIG. 4A

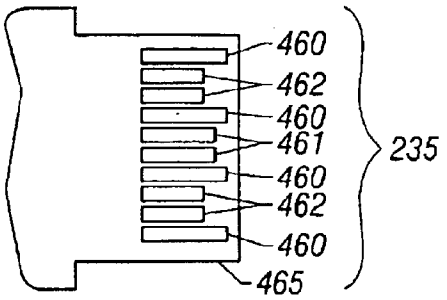

FIG. 4B

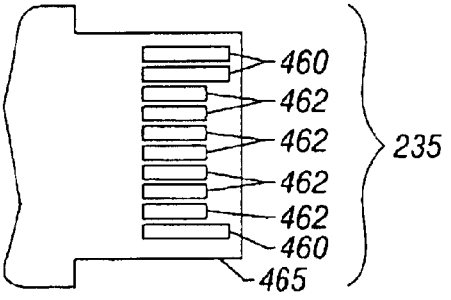

FIG. 4C

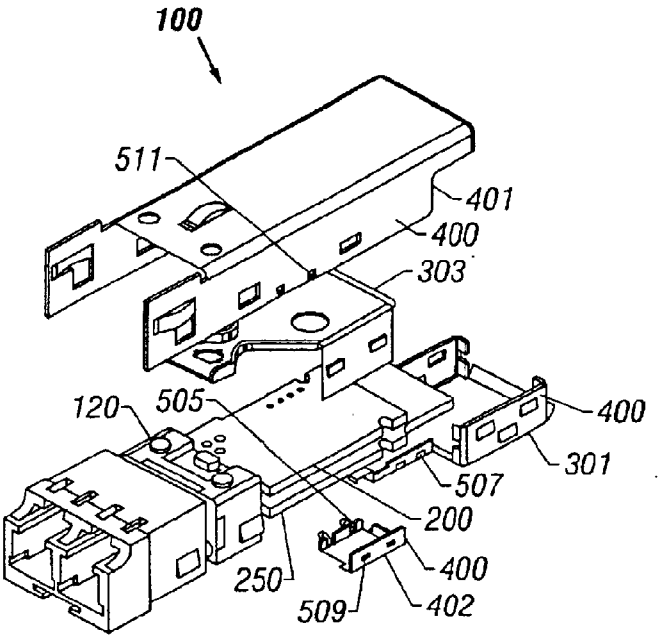
100
511
401
400
303
120
505
400
301
507
200
400
250
509
402

FIG. 5

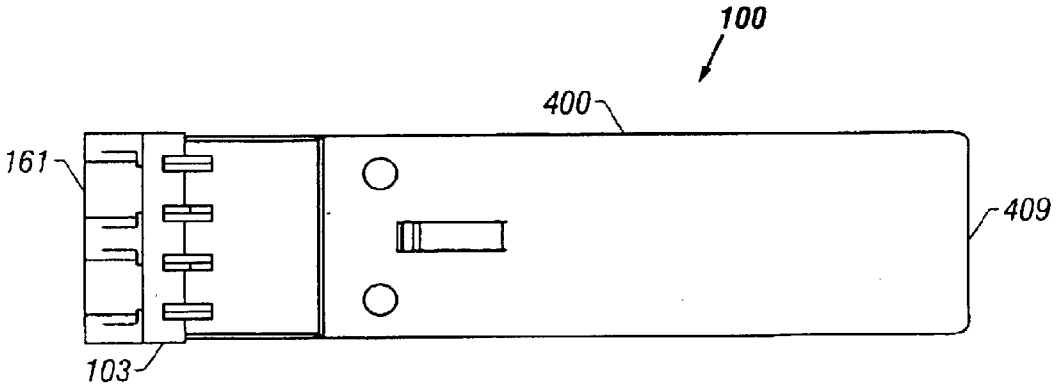
100
400
161
409
103

FIG. 6A

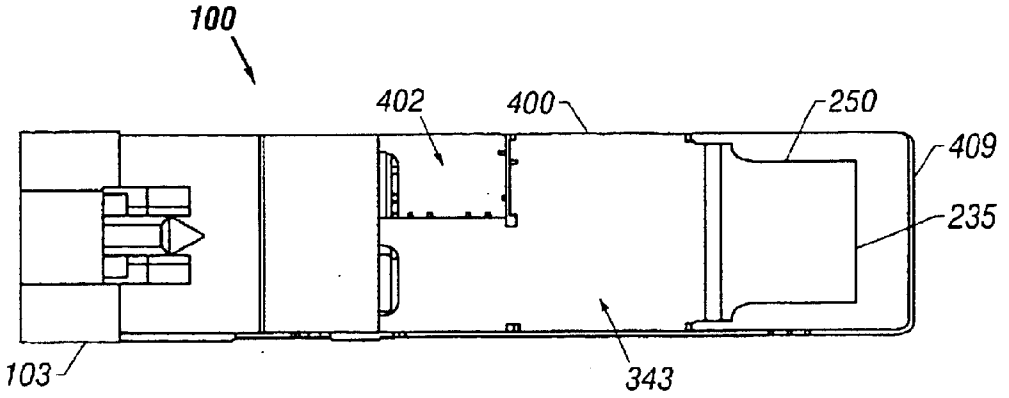

FIG. 6B

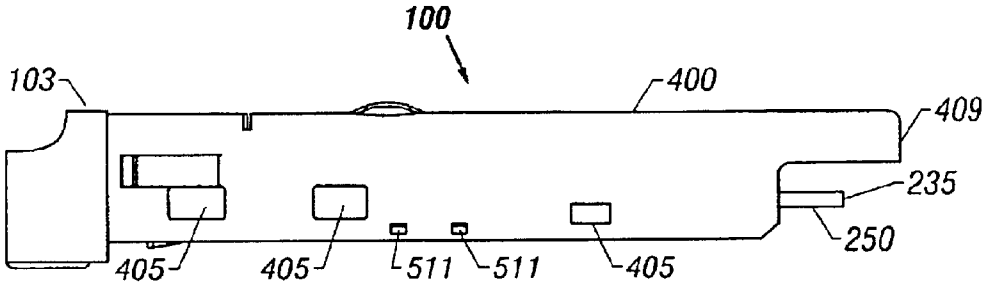

FIG. 6C

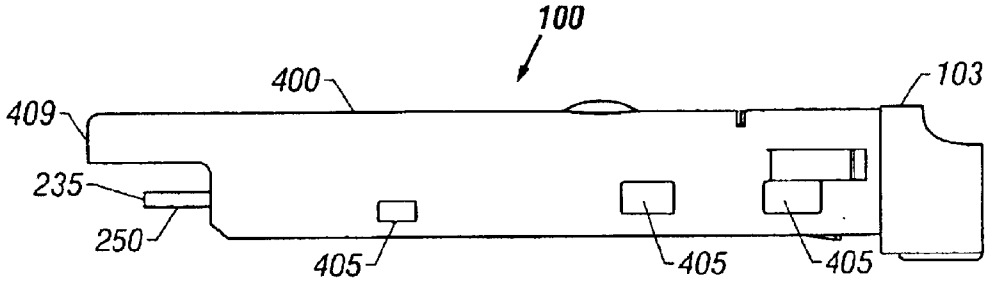

FIG. 6D

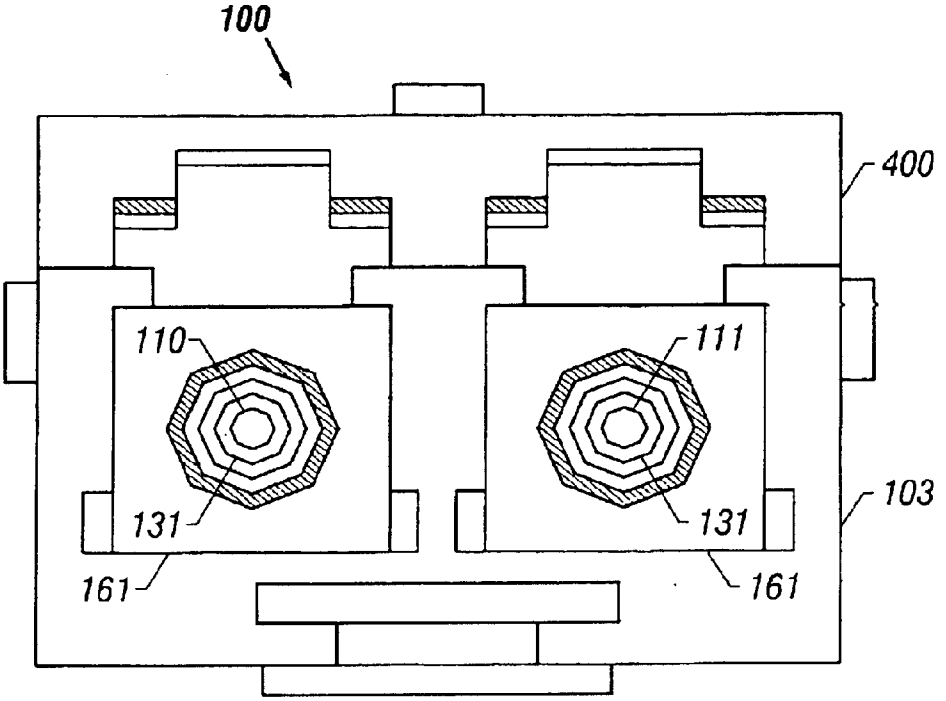
100
400
110
111
103
131
131
161
161

FIG. 6E

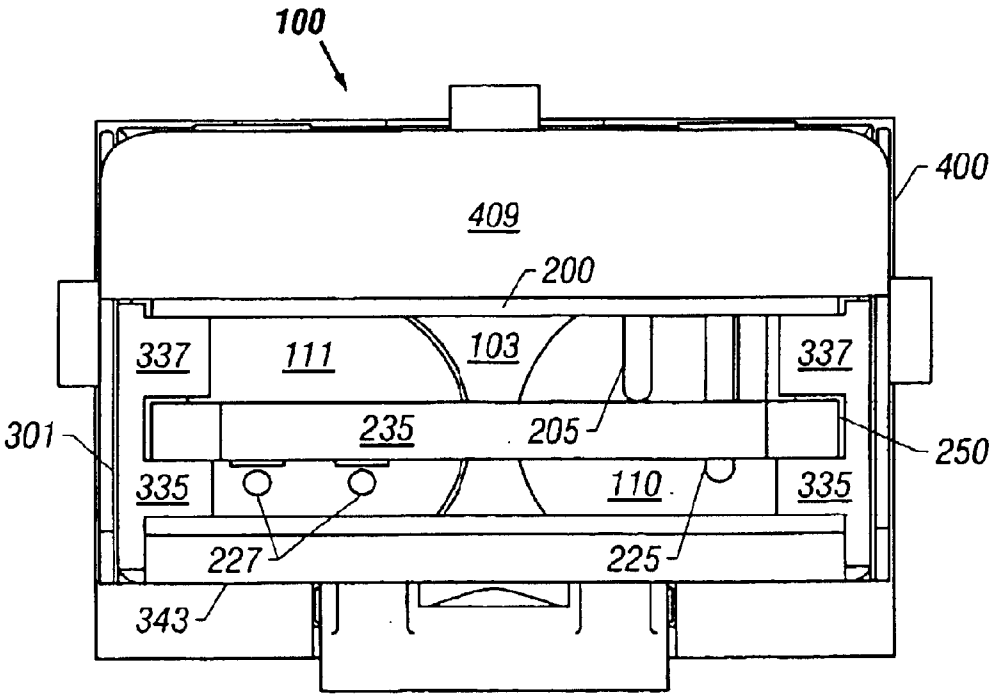
100
400
409
200
337
111
103
337
235
205
301
250
335
110
335
227
225
343

FIG. 6F

HOT PLUGGABLE OPTICAL TRANSCEIVER IN A SMALL FORM PLUGGABLE PACKAGE

CROSS REFERENCE TO RELATED APPLICATIONS

This application claims the benefit and is a continuation-in-part of U.S. patent application Ser. No. 09/321,308, filed on May 27, 1999 by Wenbin Jiang et al having Attorney Docket No. 003918.P003 which is hereby incorporated by reference and also claims the benefit and is a continuation-in-part of U.S. patent application Ser. No. 09/320,409, filed on May 26, 1999 by Wenbin Jiang et al having Attorney Docket No. 003918.P002 which is hereby incorporated by reference, all of which are to be assigned to E20 Communications, Inc.

FIELD OF THE INVENTION

This invention relates generally to light coupling devices. More particularly, the invention relates to fiber optic modules.

BACKGROUND OF THE INVENTION

Fiber optic modules interface optical fibers to electronic circuitry transducing communication by light or photons with communication by electrical signals. A fiber optic module may be a fiber optic receiver, transmitter or transceiver including both receive and transmit functions. The fiber optic receiver, transmitter and transceiver each have optical elements (OE) and electrical elements (EE). The fiber optic transmitter OE includes an emitter (such as a semiconductor LED or Laser) mounted in a package and an optical coupling element for coupling light or photons from the OE into the optical fiber. The type of semiconductor laser (light amplification by stimulated emission of radiation) may be a vertical cavity surface emitting laser (VCSEL). The fiber optic receiver OE includes a photodetector (such as a photodiode) mounted in a package and an optical coupling element for coupling light or photons from the optical fiber into the photodetector. The EE for each includes integrated circuits, other active elements and passive elements mounted on a substrate such as a printed circuit board (PCB) or ceramic. The OE and EE are connected electrically at the emitter and photodetector.

Because many of the optical elements of fiber optic modules use plastic materials, the optical elements can not tolerate the high temperatures experienced during wave soldering. Thus, wave soldering of the fiber optic module printed circuit boards must be done before the optical elements are mounted to the printed circuit board. After wave soldering, the optical-elements are then mounted to the printed circuit board in a separate manufacturing step. The additional step thereby increases manufacturing costs. It is desirable to reduce manufacturing costs of fiber optic modules by reducing the number of manufacturing steps. It is desirable to wave solder fiber optic module printed circuit boards without necessitating separate manufacturing steps to mount the optical transmitters and optical receivers.

A new standard referred to as the Hot pluggable Gigabit Interface Converter (GBIC) has recently been introduced for fiber optic modules. The details of this new standard are set forth in SFF Committee Proposed Specification for GBIC (Gigabit Interface Converter), Rev. 5.4, Aug. 16, 1999, the disclosure of which is incorporated herein by reference. However, because GBICs are of a relatively large size, end users desire a more compact, high throughput fiber optic

transceivers. Particularly, end users desire a GBIC in a small form pluggable (SFP), LC package. It is desirable to package the functions of a GBIC into the compact size of an SFP, LC package.

As end users become ever more reliant on digital optical network communication systems, short interruptions in fiber optic devices become more serious service problems. Thus a need exists to minimize down time of fiber optic modules by allowing the hot replacement of fiber optic modules, the optical elements, and/or the electrical elements of fiber optic modules.

Moreover, It is desirable to improve upon the prior art.

BRIEF SUMMARY OF THE INVENTION

Briefly, the present invention includes a method, apparatus and system as described in the claims.

A fiber optic transceiver module is implemented within a GBIC (Gigabit Interface Converter) package with LC receptacles. The fiber optic transceiver module is implemented with an optical element and an electrical element. The optical element includes an optical block holding light receivers, light transmitters, and lenses and aligns the lenses with fiber optic connectors inserted into the fiber optic receptacles. Fiber optic receptacles other than LC receptacles may be used such as SC, MT–RJ, or MU receptacles to provide an optical interface of the module to the fibers.

The electrical element is implemented with vertically stacked receiver and transmitter printed circuit boards. The use of separate vertically stacked printed circuit boards allows packaging the functions of a GBIC within an LC or other small form factor package. One of the printed circuit boards protrudes from the fiber optic module's outer housing, while the other printed circuit board is wholly contained by the outer housing.

The printed circuit board that protrudes from the outer housing includes a hot pluggable electrical connector. The hot pluggable electrical connector is a portion of the printed circuit board that protrudes from the outer housing, thereby allowing electrical coupling of the fiber optic module to other electrical data processing devices. Alternatively, when a hot plug-in application is not required, the fiber optic module may have a fixed electrical interface format it is directly soldered onto a daughter card or a system circuit board. Interconnect leads of the hot pluggable electrical connector electrically couple ground, power, and signals in to the traces of printed circuit board contained within the fiber optic module outer housing.

The separate, vertically stacked printed circuit boards are aligned with each other and the optical element by a top frame and a bottom frame. The frames may be formed of a conductive material such as a metal or other conductive material to provide electromagnetic interference (EMI) shielding. Straddle mount signal leads electrically couple the light receiver to the receiver printed circuit board. Formed (i.e. bent) signal leads electrically couple the light transmitter to the transmitter printed circuit board.

BRIEF DESCRIPTIONS OF THE DRAWINGS

FIG. **1** is a simplified top—exploded view illustrating an optical element OE for an embodiment of the present invention.

FIG. **2** is a partially assembled view of an optical element, receiver printed circuit board, and transmitter printed circuit board for an embodiment of the present invention.

FIG. **3** is an exploded view of a printed circuit board cage subassembly and optical element of the present invention.

FIG. **4** is an exploded view for the rear of the hot pluggable fiber optic module of the present invention.

FIG. **5** is exploded view from the front of the fiber optic module of the present invention.

FIG. **6**A is a top view of the assembled fiber optic module.

FIG. **6**B is a bottom view of the assembled fiber optic module.

FIG. **6**C is a right side view of the assembled fiber optic module.

FIG. **6**D is a left side view of the assembled fiber optic module.

FIG. **6**E is a front view of the assembled fiber optic module.

FIG. **6**F is a rear view of the assembled fiber optic module.

DETAILED DESCRIPTION OF THE PREFERRED EMBODIMENT

In the following detailed description of the present invention, numerous specific details are set forth in order to provide a thorough understanding of the present invention. However, it will be obvious to one skilled in the art that the present invention may be practiced without these specific details. In other instances well known methods, procedures, components, and circuits have not been described in detail so as not to unnecessarily obscure aspects of the present invention.

The present invention includes a method, apparatus and system for hot pluggable optical transceiver in a small form pluggable GBIC, LC type package.

Referring now to FIG. **1**, an exploded view of the optical element **103** of an embodiment of the present invention is illustrated. The optical element **103** include a nose **151**, a pair of fiber ferrule sleeves **131**, an electromagnetic interference shield plate **153**, the electromagnetic interference plate **153** provides shielding to keep electromagnetic interference from leaking into or out of the optical block **120** and the module. The optical block **120** aligns a light transmitter **110** and a light receiver **111** with two lenses in the optical block **120**. The light transmitters **110** or light receivers **111** are optoelectronic devices for communicating with optical fibers using light of various wavelengths or photons. An optoelectronic device is a device which can convert or transduce light or photons into an electrical signal or an electrical signal into light or photons. In the case of transmitters, the light transmitters **110** are packaged emitters that can convert electrical signals into light or photons. Examples of emitters are semiconductor lasers (i.e. a VCSEL) or an LED which may be packaged in TO (transistor outline) cans. In the case of receivers, the light receivers **111** are packaged photodetectors, that detect or receive light or photons and convert it into an electrical signal An example of a photo detector is a photo diode which may be packaged in a TO can. However other packages, housings or optoelectronic devices for receiving and transmitting light or photons may be used for the light transmitters **110** or light receivers **111**.

The electromagnetic interference plate **153** has one or more projections **156** which engage one or more external notches **157** of the optical block **120** near its edges. The optical ports **159** of the electromagnetic interference plate **153** align with a pair of optical ports **129** and **130** of the nose **151**. The electromagnetic interference plate **153** is electrically coupled to an outer housing **400** (shown on FIG. **5**) via the projections **156** and shunts electro—magnetic fields to the outer housing **400**. The fiber ferules **131** can be inserted into the optical ports **129** and **130** upon assembly. The nose **151** further has one or more posts **164** over which one or more holes **158** in the electromagnetic interference plate **153** can slide in order to align the nose **151**, the pair of fiber ferules **131**, the electromagnetic interference plate **153** and the optical block **120** together.

The nose **151** has a pair of LC receptacles **161** for mechanically coupling and aligning a pair of fiber optic cables (not shown) into the fiber optic module **100**. Each LC receptacle **161** is a fiber optic receptacle for one serial fiber optic channel. The LC receptacles **161** in the nose **151** are preferably located without spacing between each other. Neighboring channels are separated far enough apart that a fiber optic module **100** having multiple channels can comply with FDA and IEC Class—1 eye safety limits. This eases handling of the fiber optic module **100** by avoiding the use of eye protection.

Due to the size of LC receptacles, TO-can size packages are usable which allows the output power level of each individual fiber optic channel to be separately monitored. Monitoring a fiber optic channel involves splitting the light beam so that a photodetector or photodiode receives a portion of the light beam. The electrical output of the photodiode is then measured to indicate the output power level of the fiber optic channel. The relaxed spacing of the individual fiber optic receptacles of the present invention facilitate placing light beam splitters within the TO can of the light transmitter **110**. The light beam splitter splits the beam such that a portion of the light beam lands on a photodiode within the TO can. The photodiode's output is measured to monitor the output power of the transmitter. Thus, with each channel being separately monitored for power output, each channel can be individually optimized. Those skilled in the art will also recognize that other fiber optic connectors such as, but not limited to, SC, MT—RJ, VF45, and MU connectors, may be used in lieu of the LC receptacles **161**.

Referring now to FIG. **2**, a partially assembled view of an optical element **103**, a receiver printed circuit board **250**, and a transmitter printed circuit board **200** for an embodiment of the present invention is illustrated. Receiver printed circuit board **250** includes one or more receiver electrical components **227** (receiver integrated circuit (transimpedance amplifier and post amplifier), resistors, capacitors and other passive or active electrical components), a male electrical connector **235**, and a receiver ground plane **213** (not shown). The transmitter printed circuit board **200** includes one or more transmitter electrical components **229** (transmitter integrated circuit (laser driver), resistors, capacitors and other passive or active electrical components) and a transmitter ground plane **215** (not shown). The receiver printed circuit board **250** and the transmitter printed circuit board **200** may be assembled by wave soldering.

At least one pin of the male electrical connector **235** couples to an external female electrical connector. The external female electrical connectors may be SFP (Small Form Pluggable) SMT (Surface Mount Technology) connectors. One or more pins of the male electrical connector **235** allow electrical signals, power, and ground to be coupled into or out of the fiber optic module **100**.

Referring now to FIG. **3**, an exploded view of the optical element **103**, the receiver printed circuit board **250**, the transmitter printed circuit board **200**, a bottom frame **301**, and a top frame **303** is illustrated. One or more transmitter pins **243** of the male electrical connector **235** which couple

to the transmitter electrical components **229**, the transmitter electrical components **229**, the light transmitter **110**, the interconnect leads **225** and a lens (not shown) of the optical block form one transmitting channel. The transmitter electrical components **229** control the light transmitter **110** and buffer the data signal received from a system for transmission over an optical fiber. One or more receiver pins **245** of the male electrical connector **235** which couple to the receiver electrical components **227**, the receiver electrical components **227**, the light receiver **111** and a lens (not shown) of the optical block form one receiving channel. The receiver electrical components **227** control the light receiver **111** and buffer the data signal received from an optical fiber. Other combinations of components can form other combinations of communications channels.

The optical element **103** includes the light receiver ill with a plurality of straddle mount signal leads **201**. The Straddle mount signal leads **201** are arranged in two horizontal rows to straddle a printed circuit board. The two rows of straddle mount signal leads **201** sandwich the receiver printed circuit board **250** so that the straddle mount signal leads **201** electrically couple the light receiver **111** to a plurality of receiver contacts **203** on both sides of the receiver printed circuit board **250**. To improve the coupling between the straddle mount signal lead **201** and the receiver contacts **203**, solder may be applied to the straddle mount signal leads **201** and the receiver contacts **203**. The receiver contacts **203** are preferably a metal such as copper, silver, gold or other metal or alloy. The receiver contacts **203** may be on one or both the top and bottom surfaces of the receiver printed circuit board **250**.

Optical element **103** has a light transmitter **110** with a plurality of formed (i.e. bent) signal leads **205**. Each formed signal lead **205** is bent and turned up to couple to a header signal via **207**, in the printed circuit board. The printed circuit board **250** has a cutout **209** that allows space for a horizontal portion of the formed signal lead **205**. The cutout **209** may be at an angle cutting out a corner of receiver printed circuit board **250**. In the alternative, the cutout **209** may be a square, semicircle, quarter circle or other shape. The vertical portion of each formed signal lead **205** is long enough to couple the light transmitter **110** to the transmitter printed circuit board **200**.

The ends of formed signal leads **205** couple to a plurality of vias **207**, through-holes, contacts or other coupling devices on the transmitter printed circuit board **200**. To improve the coupling between a formed signal lead **205** and a via **207**, solder may be applied to the formed signal lead **205** and the via **207**. Since the printed circuit board assemblies and optical elements are mechanically coupled after the printed circuit boards have been wave soldered, the optical elements are not subject to the heat generated by wave soldering. While a 90 degree angle has been described, it is understood that other arrangements of the formed signal leads **205** may be employed to couple the light transmitter **110** to the transmitter printed circuit board **200**.

When assembled into the fiber optic module, the receiver printed circuit board **250** and the transmitter printed circuit board **200** are vertically stacked and substantially parallel to each other. The top frame **303** and the bottom frame **301** hold the receiver printed circuit board **250** and the transmitter printed circuit board **200** in fixed vertical and horizontal alignment.

The fiber optic module further includes one or more interconnect leads **225** which electrically couple the transmitter electrical components **229** on the transmitter printed circuit board **200** to transmitter pins **243** of the electrical connector by means of signal traces in the receiver printed circuit board **250**.

The receiver printed circuit board **250** includes a receiver ground plane **213** (shown in FIG. **2**), and the transmitter printed circuit board **200** includes a transmitter ground plane **215** (shown in FIG. **2**). Receiver ground plane **213** shunts electromagnetic fields radiating into it to ground via a pin in the male electrical connector **235**. The transmitter ground plane **215** shunts electromagnetic fields radiating into ground through one or more of the interconnect leads **225**, a transmitter trace **247** on the receiver printed circuit board **250**, and a pin **243** in the male electrical connector **235**.

The receiver printed circuit board **250** includes a pair of slots **231** (referred to as receiver slots **231**) one in the left side edge and another in the right side edge of the printed circuit board as shown and illustrated in FIG. **2**. The transmitter printed circuit board **200** includes a pair of slots **233** (referred to as transmitter slots **233**) one in the left side edge and another in the right side edge of the printed circuit board as shown and illustrated in FIG. **2**. The receiver slots **231** and the transmitter slots **233** facilitate alignment between the receiver printed circuit board **250** and the transmitter printed circuit board **200**.

The bottom frame **301** includes a pair of sides **341**A and **341**B, a base **343**, a pair of rails **305**A and **305**B, a plurality of lower support tabs **335** and a plurality of upper support tabs **337** extending from a pair of corners of each of the sides **341**A and **341**B as illustrated in FIG. **3**. The base **343** of the bottom frame **301** is L shaped such that the rail **305**B extends along the side and base of the bottom frame **301** while the rail **305**B extends out of a center line (near the middle of the bottom frame) with a surface of the base therebetween. The L shape leaves a cutout area from the base of the bottom frame which will be filled in by a bottom cover as described below. The rail **305**A extending from the center line or middle of the bottom frame **301**, includes a tip **355**A that extends outward and is inserted into an opening **155** in the optical block **120**.

The top frame **303** includes a top **347**, a pair of top frame sides **349**A and **349**B, a pair of alignment rails **307**, and a flange **321** as shown and illustrated in FIG. **3**.

When assembled, the receiver printed circuit board **250** is inserted into a pair of slots **309** between the upper support tabs and the lower support tabs and rests on the lower support tabs **335** of the bottom frame **301**. A pair of receiver slots **231** in edges of the receiver printed circuit board **250** are located near corners of the sides **341**A and **341**B of the receiver printed circuit board. The four lower support tabs **335** and the four upper support tabs **337** restrict vertical movement in the receiver printed circuit board **250** when its engaged thereto. One or more of the elements of the bottom frame **301** may be formed of a conductive material such as a metal or formed to include a conductive plating or surface. The conductive material of the bottom frame **301** shunts electromagnetic fields to ground via an electrical coupling to chassis ground. In this manner the bottom frame **301** can provide electromagnetic interference shielding for the fiber optic module.

When assembled, the transmitter printed circuit board **200** rests on the four upper support tabs **337** of the bottom frame **301** such that the pair of transmitter slots **233** in the transmitter printed circuit board **200** are aligned directly above the pair of receiver slots **231** in the receiver printed circuit board **250** at a position adjacent to and above the upper support tabs **337**. The alignment of the slots **233** with

the slots **231** in each of the respective printed circuit boards assures that the transmitter interconnect vias **239** align with the receiver interconnect vias **241** such that the one or more interconnect leads **225** can be coupled therebetween. The one or more interconnect leads **225** couple the respective transmitter traces **247** in the transmitter printed circuit board **200** and the receiver printed circuit board **250** together. The interconnect leads **225** are soldered to the receiver printed circuit board **250** at the receiver interconnect vias **241** on one end and to the transmitter printed circuit board **200** at the transmitter interconnect vias **239** at an opposite end. Though the interconnect leads **225** have been described as providing electrical coupling between the receiver printed circuit board **250** and the transmitter printed circuit board **200**, it is understood that other interconnect devices may be employed including ribbon cable, wires, male and female electrical connectors and the like.

The pair of top frame sides **349**A and **349**B of the top frame **303** engage with the bottom frame sides **341**A and **341**B of the bottom frame **301** respectively when they are assembled together. When assembled, external faces of the top frame sides **349** abut inside faces of bottom frame sides **341**. Each of the top frame sides have a pair of locking tabs **313** which engage with a pair of lock tab apertures **315** in each of the bottom frame sides **341** to hold them together. The locking tabs **313** and the locking tab apertures **315** prevent the bottom frame **301** and the top frame **303** from moving vertically relative to each other. Each vertical edge of the top frame sides **349**A and **349**B mates with the upper tabs **337** and the lower tabs **335** to keep the top frame **303** from moving laterally relative to the bottom frame **301**. The top frame **303** has the pair of alignment rails **307** on edges of the top frame sides **349**A and **349**B. The alignment rails **307** mate with the pair of transmitter slots **233** in the transmitter printed circuit board **200** and the pair of the receiver slots **231** in the receiver printed circuit board **250** to keep them in alignment so that the interconnect leads **225** are not sheared by movement in either and the electrical coupling is maintained. Top frame **303** has a tab **363**, rib, post or other member on the underside of top **347**. When top frame **303** is assembled to the bottom frame **301** and transmitter board **200**, the tab **363** prevents upward movement of transmitter printed circuit board **200**. Additionally, the pair of alignment rails **307** abut a pair of lower support tabs **335** and a pair of upper support tabs **337** to maintain alignment and avoid movement as stress is placed on the receiver printed circuit board **250** when the fiber optic module is pulled away from a connector. The top frame **303** includes the flange **321** which extends from the top **347** of the top frame **303** as shown and illustrated in FIG. **3**. The flange **321** includes an opening **317** which slides over a top post **319** of the optical block **120** of the optical element **103**. When the opening **317** of the flange **321** is mated with the top post **319**, the top frame **303** is tightly coupled to the optical element **103** to avoid separation when the fiber optic module is inserted or removed from a connector. With the opening **317** engaged to the top post **319** so that the top frame is tightly coupled, the alignment rails **307** of the top frame **303** in conjunction with the receiver slots **231** and the transmitter slots **233**, keep the receiver printed circuit board **250** and the transmitter printed circuit board **200** tightly coupled to the optical element **103** as well to avoid separation. The flange **321** includes a flange lip **325** that abuts a recess wall **327** of the optical block **120** to prevent lateral movement of the top frame **303** relative to the optical elements **103**.

The top frame **303** includes a pair of top frame sides **349**A and **349**B and the top **347**. These and other elements of the top frame may be formed of a conductive material such as a metal or formed to include a conductive plating or surface. The conductive material of the top frame **303** shunts electromagnetic fields to ground via an electrical coupling to chassis ground. In this manner, the top frame **303** provides electromagnetic interference shielding to the fiber optic module.

The assembled subassembly including the receiver printed circuit board **250**, the transmitter printed circuit board **200**, the interconnect leads **225**, the bottom frame **301** and the top frame **303** can hereinafter be referred to as a printed circuit board assembly **411**.

Referring now to FIG. **4**A, an exploded view of an outer housing **400** and the printed circuit board assembly **411** is illustrated. The outer housing **400** includes a top cover **401**, a bottom cover **402** and the L shaped bottom frame **301**. The top cover **401**, the bottom cover and the bottom frame **301** couple together to encase the receiver and transmitter printed circuit boards but for the extension in the receiver printed circuit board forming the male connector **235**. The top cover **401** includes a top portion and a pair of sides that fit over the printed circuit board assembly **411** and the optical element **103**. The top cover **401** includes a plurality of locating tab openings **405** in each of its sides to engage with locating tabs **407** in sides of the optical block **120**, in the nose of optical element **103**, and in the bottom frame **301**. When the locating tab openings **405** are engaged with the locating tabs **407**, movement of the top cover **401** relative to the optical element **103** is prohibited. The top cover **401** includes a hood **409** which encloses an end of the transmitter printed circuit board **200** but leaves the connector **235** of the receiver printed circuit board **250** exposed to connect to a connector. The male electrical connector **235** extends from the top cover **401** to mechanically and electrically couple to an external female electrical connector.

The bottom cover **402** is of sufficient size to fill into the cutaway area in the L shaped bottom frame **301**. The bottom cover **402** couples to the bottom frame **301** on one side and the top cover **401** on an opposite side.

Referring now to FIGS. **4**B and **4**C, pins of the male electrical connector **235** are illustrated in detail to provide hot plugability. The male electrical connector **235** includes one or more ground or negative power pins **460**, one or more positive power pins **461** and one or more signal pins **462** on top and/or bottom surfaces of the receiver printed circuit board **250**. The pins **460**, **461**, and **462** are staggered from each other with reference to an edge **465** of the receiver printed circuit board **250** to facilitate the hot plugability. The ground pins **460** of the male electrical connector **235** are closer to the edge **465** than any other pin in the male electrical connector **235** in order for ground to be established first when the fiber optic module is inserted and for ground to be removed last when its removed. The positive power pins **461** are next closest to the edge **465** for power to be established secondly when the fiber optic module is inserted and for power to be removed next to last when its removed. The signal pins **462** are farther from the edge that the power pins **461** and ground pins **462** so that they are established after power and ground has been when inserted and they are disconnect first when the fiber optic module is removed.

During the mating of the male electrical connector **235** with an external female electrical connector, the ground pins electrically couple first to ground receptacles of the external female electrical connector in order to ground the fiber optic module **100**. During the demating of the male electrical connector **235** and external female electrical connector, the

ground pin electrically decouples from the ground last to maintain the grounding of the fiber optic module **100** until after power is removed from the fiber optic module **100**. The ground pins **460** being closer to the edge **465** than the power pins **461** and the signal pins **462**, prevents damage and disruption to the fiber optic module and the system during the physical insertion and removal of the fiber optic module into and out of the system. The capability to physically remove and insert the fiber optic module during operation without damage or disruption is referred to as hot pluggability.

The outer housing **400**, including the top cover **401** and the bottom cover **402** and the bottom frame **301**, may be formed of a conductive material such as a metal or include a conductive plating or surface. With the outer housing **400** formed out of a conductive material, the outer housing **400** can shunt electromagnetic fields radiating into the outer housing **400** to ground via an electrical coupling to chassis ground. In this manner the outer housing **400** also can provide electromagnetic interference shielding to the fiber optic module.

Referring now to FIG. **5**, an exploded view of the fiber optic module **100** from the front is illustrated. The bottom cover **402** of the outer housing **400** includes a pair of tabs **509** on one side and a pair of projections **505** on an opposite side. The projections **505** of the one side engage a pair of holes **507** in a side of the rail **305**A of the bottom frame **301**. The projections **505** in the opposite side of the bottom cover **402** engage the housing holes **511** in a side of the top cover **401**. The inside surface of the side of the top cover **401** couples to the outer surface of the side of the bottom cover **402** when the tabs **509** are mated with the housing holes **511**.

The bottom cover **402** can be readily disassembled and reassembled with the top cover **401** and the bottom frame **301** of the fiber optic module **100**. By removing the bottom cover **402**, a portion of the receiver printed circuit board is exposed to allow access to adjust adjustable electrical components (not shown) on the receiver printed circuit board **250**. The adjustable electrical components electrically couple to the electrical components **227** on the receiver printed circuit board **250**. The adjustable electrical components electrically couple to the electrical components **229** by way of a conductive path through one or more transmitter traces **361** on the receiver printed circuit board **250**, the interconnect vias **225**, and the transmitter traces **247** on the transmitter printed circuit board **200**. The adjustable electrical components may include DIP switches, potentiometers, variable capacitors and other devices used to tune or adjust the performance of the fiber optic module **100**.

The bottom cover **402** can also be formed of a conductive material such as a metal or include a conductive plating or surface which is coupled to chassis ground (via holes **507**, housing holes **511** and tabs **505** and projections **509**) in order to provide electromagnetic interference shielding for the fiber optic module **100**.

FIG. **6**A illustrates a top view of a fully assembled fiber optic module **100**. FIG. **6**B illustrates a bottom view of a fully assembled fiber optic module **100**. FIG. **6**C illustrates a right side view of a fully assembled fiber optic module. FIG. **6**D illustrates a left side view of a fully assembled fiber optic module. FIG. **6**C illustrates a front view of a fully assembled fiber optic module. FIG. **6**D illustrates a rear view of a fully assembled fiber optic module. To assemble the fiber optic module **100** of the present invention, the receiver printed circuit board **250** is first slid into the slots **309** of the bottom frame **301** between the upper support tabs **337** and the lower support tabs **335** until the receiver slots **231** are adjacent to, and just inside an end of the bottom frame **301**. When receiver printed circuit board **250** is properly positioned in the bottom frame **301**, receiver electrical components **227** are face down, the ground plane is face up and the male electrical connector **235** extends beyond the end of the bottom frame **301** so that its external thereto.

Next, the one or more interconnect leads **225** are then press fit into the receiver interconnect vias **241**. Solder is applied to the interconnect leads **225** at the receiver interconnect vias **241**.

Then the transmitter interconnect vias **239** of the transmitter printed circuit board **200** are aligned with the one or more interconnect leads and press fit together so that the transmitter printed circuit board rests on top of the upper support tabs **337**. With proper orientation, the ground plane is facing down toward the receiver printed circuit board while the transmitter electrical components **229** are on the face up side on the surface of the transmitter printed circuit board **200** and opposite the receiver printed circuit board **250**. After press fitting them together, solder is applied to the interconnect leads **225** at the transmitter interconnect vias **239**.

The top frame **303** is next in the assembly process. The alignment rails **307** of the top frame **303** are aligned with the transmitter slots **233** and the receiver slots **231**. The alignment rails **107** are inserted into the transmitter slots **233** so that external surfaces of the sides **349**A and **349**B slide into the internal surfaces of the sides **341**A and **341**B respectively. The top frame **303** is coupled to the bottom frame such that the alignment rails **107** slide through the transmitter slots **233** and the receiver slots **231** until the locking tabs **313** engage with the lock tab apertures **315** to lock the top frame **303** in place relative to the bottom frame **301**.

The optical elements **103** are prepared in parallel with forming the printed circuit board assembly **411**. A die (not shown) is used to bend the signal leads of the light transmitter **110** through 90 degrees to form the formed signal leads **205** of the present invention. The optical elements are then assembled and aligned together as a subassembly.

The printed circuit board subassembly **411** is then coupled together to the optical elements subassembly. The printed circuit board subassembly **411** is positioned with the optical elements so that the receiver contacts **203** of the receiver printed circuit board **250** align with the space between the horizontal rows of straddle mount signal leads **201**. The flange **321** of the top frame **303** is flexed upward so that the opening **317** can mate with the post **319**. The printed circuit board subassembly and optical element **103** are brought together so that the receiver contacts **203** can electrically be couple to the straddle mount signal leads **201** and the tip **355**A slides into the opening **155**. The flange **321** is then released so that the opening **317** slides over the top post **319** to secure the printed circuit board subassembly **411** to the optical element subassembly **103**.

Next the outer housing **400** is completed around the printed circuit board subassembly **411**. The top cover **311** is aligned with the printed circuit board subassembly **411** so that the locating tab openings **405** can mate with the locating tabs **407**. The top cover **401** is slid over the optical element subassembly **103** and the printed circuit board subassembly **411** so that the locating tabs **407** snap into the locating tab openings **405**.

The bottom cover **402** is then couple to the bottom frame **301** and the top cover **401**. The bottom cover is tilted so that the projections **505** engage the holes **507** in the side of the

rail of the bottom frame **301**. Then, the top cover **402** is pressed upward so that the tabs **509** engage with the housing holes **511** so that the bottom cover **402** is secured in place to complete the assembly of the fiber optic module **100**.

For transmitting signals, the fiber optic module **100** electrically functions such that external electrical transmitter signals arriving at transmitter pins **243** in the male electrical connector **235** are coupled into the transmitter traces **247** routed on the receiver printed circuit board **250**. The transmitter traces **247** couple the external electrical transmitter signal from the transmitter pins **243** to the receiver interconnect vias **241**. The receiver interconnect vias couple the transmitter signals to the one or more interconnect leads **225**. The one or more interconnect leads **225** couple the electrical signals from the receiver interconnect vias **241** at one end into the transmitter interconnect vias **239** at an opposite end. The transmitter traces **247** on the transmitter printed circuit board **200** couple the electrical signals from the transmitter interconnect vias **239** into the transmitter electrical components **229** and/or the transmitter **110**. The transmitter electrical components **229** process the electrical signals into electrical transmission pulses for coupling to the light transmitter **110**. The light transmitter **110** transduces the electrical transmission pulses into light pulses for transmission over the fiber optic cables.

For receiving signals, the fiber optic module **100** electrically functions such that external light pulses arriving at the LC receptacles **161** are transduced into electrical pulses by the light receiver **111** for coupling into the receiver electrical components **227**. The receiver electrical components **227** process the electrical pulses into electrical receiver signals which are coupled to the receiver traces **249** of the receiver printed circuit board. The receiver traces **249** couple the receiver signals to the receiver pins **245** in the male electrical connector **235** by which the electrical receiver signals are coupled to external devices. In one embodiment of the present invention, one electrical component on one of the printed circuit boards controls both the light transmitter **110** and the light receiver **111**.

In operation, the fiber optic module **100** may be housed in a rack or a cabinet designed to house an LC, GBIC package. When the fiber optic module **100** is inserted into the rack the male electrical connector **235** couples to a female electrical connector of the rack or cabinet. As the electrical connectors couple, one or more ground pins in the male electrical connector **235** electrically couples to one or more corresponding ground receptacles in the female electrical connector before any other pin electrically couples. One or more power pins in the male electrical connector **235** electrically couple to one or more corresponding power receptacles in the female electrical connector before any signal pins electrically couple. After the ground and power pins have coupled, one or more signal pins may then electrically couple to one or more corresponding signal receptacles. Either before or after the fiber optic module is inserted into the rack, fiber optical cables (not shown) are connected to the LC receptacles **161**.

When it is desired to replace the fiber optic module **100** for some reason, the present invention allows hot pluggable replacement. First the fiber connector is removed from the fiber optical module **100**. Then the module is disconnected from any electrical connector into which it is coupled. As it is disconnected, the signal pins decouple first, the power pins second and the ground pins last. After which a new fiber optical module **100** can be inserted with the connecting sequence occurring as discussed above.

After the fiber optic module is disconnected, the optical element subassembly or the printed circuit board subassembly may be easily replaced. To replace the optical element **103**, the flange **321** is flexed up to demate the opening **317** and the top post **319**. The optical subassembly is then pulled away from the printed circuit board assembly **411**. As the optical subassembly is pulled away from the printed circuit board assembly **411**, the straddle mount signal leads **201** decouple from the receiver contacts **203**. The formed signal leads **205** also decouple from the header signal vias **207**. A replacement optical subassembly is then coupled to the printed circuit board assembly **411** as discussed above. After which the fiber optical module **100** (the replacement optical element **103** coupled to the printed circuit board assembly **411**) can be inserted with the connecting sequence occurring as discussed above.

To replace the printed circuit board assembly **411**, the optical fiber optic module is removed as discussed above, except that the fiber optic cables need not be removed from the LC receptacles **161**. The flange **321** is flexed up to demate the opening **317** and the top post **319**. The optical element **103** is then pulled away from the printed circuit board assembly. As the printed circuit board assembly **411** is pulled away from the optical element **103**, the straddle mount signal leads **201** decouple from the receiver contacts **203**. The formed signal leads **205** also decouple from the header signal vias **207**. A replacement printed circuit board assembly **411** is then coupled to the optical element **103** as discussed above. After which the fiber optical module **100** (the optical element **103** coupled to the replacement printed circuit board assembly **411**) can be inserted with the connecting sequence occurring as discussed above.

The previous detailed description describes the fiber optic module **100** as including one receiver and one transmitter. However, one of ordinary skill can see that the fiber optic module **100** may include two or more combinations of vertically stacked receivers, or transmitters, or receivers and transmitters. One embodiment of the present invention includes four vertically stacked transmitters. Another embodiment includes four vertically stacked receivers. Yet another embodiment includes a combination of four vertically stacked transmitters and receivers.

Furthermore, as one of ordinary skill can see, the positions of the receiver printed circuit board **250** and the transmitter printed circuit board **200** may be reversed. In this embodiment of the present invention, the transmitter printed circuit board **200** has the cutout **209** creating a distance **211** for the formed signal leads **205** of the light receiver **111**. The formed signal leads **205** of the light receiver **111** couple to the header signal vias **207** on receiver printed circuit board **250**. The straddle mount signal leads **201** of the light transmitter **110** couple to contacts on the transmitter printed circuit board **200**. In this embodiment, the electrical components **227** and **229** are on opposite surfaces of the printed circuit boards **250** and **200** so that the ground planes **213** and **215** provide electromagnetic shielding to the electrical components **227** and **229**.

In another embodiment of the present invention, the transmitter printed circuit board **200** includes the male electrical connector **235**. Receiver traces **249** of the transmitter printed circuit board **200** couple receiver pins **245** of the male electrical connector **235** to the interconnect vias **225**. The interconnect vias **225** couple the receiver traces **249** of the transmitter printed circuit board **200** to receiver traces **249** of receiver printed circuit board **250** for coupling to receiver electrical components **227**. The transmitter printed circuit board **200** also includes a portion that protrudes from the outer housing **400** and that includes the male electrical connector **235**, thereby allowing the male electrical connector **235** to couple to an external female electrical connector.

As those of ordinary skill will recognize, the present invention has many advantages over the prior art. One advantage of the present invention is that each channel can be separately monitored for power output and therefore individually optimized. Another advantage of the present invention is that spacing provided between fiber optic channels eases the attachment of heatsinks. Another advantage of the present invention is that the receiver printed circuit board and transmitter printed circuit board may be wave soldered without over heating the optical elements or components. Additionally, the present invention allows the hot replacement of either the optical element, the electrical element, or the entire fiber optic module. Moreover, the fiber optic module of the present invention provides these advantages while conforming to the GBIC de facto standard.

The preferred embodiments of the present invention are thus described. While the present invention has been described in particular embodiments, the present invention should not be construed as limited by such embodiments, but rather construed according to the claims that follow below.

What is claimed is:

1. A fiber optic module-comprising:

a first printed circuit board having a first contact and a second contact near an edge and a first via, the second contact coupled to the first via;

a first light transducer coupled to the first printed circuit board and electrically connected to the first contact;

a second printed circuit board, vertically stacked and parallel to the first printed circuit board, having a second via aligned with the first via in the first printed circuit board;

an interconnect coupled to the first via of the first printed circuit board at one end and the second via of the second printed circuit board at an opposite end, the interconnect to couple signals between the first printed circuit board and the second printed circuit board;

a second light transducer coupled to the second printed circuit board and electrically connected to the second contact; and

an electrical connector formed on an edge said first printed circuit board for plugging into a mating connector on a system circuit board, whereby a first pin on said electrical connector is electrically connected to said first light transducer, via said first printed circuit board, and a second pin on said electrical connector is electrically connected to said second light transducer, via the second printed circuit board, the interconnect and the first printed circuit board;

wherein the second light transducer has an optical axis parallel to an optical axis of the first light transducer; and

wherein the optical axes of the first and second light transducers define a plane, which is parallel to the first and second printed circuit boards.

2. The fiber optic module of claim **1**, wherein the first printed circuit board includes a third contact and a fourth contact near the edge, the first, second, third and fourth contacts being staggered from the edge of the first printed circuit board to provide hot pluggability.

3. The fiber optic module of claim **2**, wherein the first, second, third and fourth contacts are staggered from the edge of the first printed circuit board such that the fourth contact is nearest the edge and couples to ground or a negative power supply and the third contact is the next nearest to the edge and couples to a positive power supply and the first and second contacts are equally the farthest from the edge to couple to signals.

4. The fiber optic module of claim **1**, wherein the first printed circuit board and the second printed circuit board are substantially parallel to each other and are substantially parallel to optical axes of the first light transducer and the second light transducer to conserve space.

5. The fiber optic module of claim **1**, wherein

the first printed circuit board has a first ground plane,

the second printed circuit board has a second ground plane, and

the first printed circuit board and the second printed circuit board are substantially parallel to each other with the first ground plane and the second ground plane facing each other to reduce electrical cross talk.

6. The fiber optic module of claim **1**, further comprising:

an optical block including,

a first opening to receive and align the first light transducer, and

a second opening to receive and align the second light transducer.

7. The fiber optic module of claim **1**, wherein the first light transducer has a plurality of straddle mount leads for straddling the first printed circuit board;

wherein the second light transducer has a plurality of formed signal leads; and

wherein the first printed circuit board has a cutout section enabling the formed signal leads to extend to the second printed circuit board.

8. A fiber optic module comprising:

a first printed circuit board having a first contact and a second contact near an edge, and a first via, the second contact coupled to the first via, the first printed circuit board having a first slot on an edge;

a first light transducer coupled to the first printed circuit board and electrically connected to the first contact;

a second printed circuit board having a second via aligned with the first via in the first printed circuit board, the second printed circuit board has a second slot on an edge;

an interconnect coupled to the first via of the first printed circuit board at one end and the second via of the second printed circuit board at an opposite end, the interconnect to couple signals between the first printed circuit board and the second printed circuit board;

a second light transducer coupled to the second printed circuit board and electrically connected to the second contact;

a top frame having an alignment rail, the alignment rail to engage into the first slot substantially perpendicular to the first printed circuit board and the second slot substantially perpendicular to the second printed circuit board, the top frame to hold the first printed circuit board and the second printed circuit board in alignment together;

a bottom frame coupled to the top frame, the bottom frame having: upper support tabs and lower support tabs forming a slot therebetween, and an opening to couple to a tab in the top frame to hold the top and bottom frames in alignment together;

wherein the first printed circuit board is engaged into the slot between the upper support tabs and the lower support tabs; and

wherein the second printed circuit board is engaged between the upper support tabs and an inner surface of a top of the top frame.

9. The fiber optic module of claim 8, further comprising:

an optical block including,

a first opening to receive and align the first light transducer,

a second opening to receive and align the second light transducer, and

a post;

and wherein the top frame includes an opening to couple to the post of the optical block to align and hold the first printed circuit board, the second printed circuit board and the optical block coupled together.

10. A fiber optic module comprising:

a first printed circuit board having a first contact and a second contact near an edge, and a first via, the second contact coupled to the first via;

a first light transducer coupled to the first printed circuit board and electrically connected to the first contact;

a second printed circuit board having a second via aligned with the first via in the first printed circuit board;

an interconnect coupled to the first via of the first printed circuit board at one end and the second via of the second printed circuit board at an opposite end, the interconnect to couple signals between the first printed circuit board and the second printed circuit board;

a second light transducer coupled to the second printed circuit board and electrically connected to the second

a bottom frame having upper support tabs to support the first printed circuit board and lower support tabs to support the second printed circuit board, and

a top cover having a top and a pair of sides coupled to the bottom frame encasing the first and second printed circuit boards but for a portion of the first printed circuit board to expose the first and second contacts

wherein the bottom frame is L shaped having a cutout to expose a portion of the first printed circuit board in order to allow access thereto; and

wherein the fiber optic module further comprises a bottom cover to couple to the bottom frame on one side and the top cover on the opposite side, the bottom cover to seal the cutout in the bottom frame and encase the first and second printed circuit boards but for the portion of the first printed circuit board to expose the first and second contacts.

11. The fiber optic module of claim 10, wherein the bottom frame and the top cover are formed of a conductive material to shunt electromagnetic interference to ground.

12. The fiber optic module of claim 10, wherein the first printed circuit board includes an tunable circuit to tune the performance of the fiber optic module and the cutout allows access thereto when the bottom cover is disassembled from the fiber optic module.

13. The fiber optic module of claim 10, wherein the bottom frame, the top cover, and the bottom cover are formed of a conductive material to shunt electromagnetic interference to ground.

14. A fiber optic module for transferring data as pulses of light, comprising:

an optical element including:

a first light transducer having a plurality of straddle mount leads,

a second light transducer having a plurality of formed signal leads,

a printed circuit board assembly including:

a first printed circuit board having a first set of contacts on opposite sides thereof, and

a second printed circuit board having a second set of contacts, the second printed circuit board being vertically stacked, parallel and electrically connected to the first printed circuit board,

said first and second printed circuit boards being aligned so that said straddle mount leads straddle said first printed circuit board and are coupled to said first contacts, and so that said formed signal leads are coupled to said second contacts; and,

an electrical connector extending from said first printed circuit board to couple electrical signals between a system circuit board and said first printed circuit board and said second printed circuit board;

wherein the second light transducer has an optical axis parallel to an optical axis of the first light transducer;

wherein the optical axes of the first and second light transducers define a plane, which is parallel to the first and second printed circuit boards; and

wherein the first printed circuit board has a cutout section enabling the formed signal leads to extend to the second printed circuit board.

15. The fiber optic module of claim 14, further comprising an outer housing for supporting the first and second printed circuit boards; wherein said electrical connector is hot pluggable, protrudes outside of said outer housing, has a first pin electrically coupled to said first printed circuit board, and has a second pin electrically coupled to said second printed circuit board.

16. The fiber optic module of claim 14, wherein said first light transducer is a light receiver.

17. The fiber optic module of claim 16, wherein said second light transducer is a light transmitter.

18. The fiber optic module of claim 14, further comprising LC receptacles.

19. The fiber optic module of claim 14, wherein said optical element and said printed circuit board assembly are a GBIC package.

20. The fiber optic module of claim 14, wherein:

the first printed circuit board has a first ground plane,

the second printed circuit board has a second ground plane, and

the first printed circuit board and the second printed circuit board are substantially parallel to each other with the first ground plane and the second ground plane facing each other to reduce electrical cross talk.

* * * * *