US005879173A

United States Patent [19]

Poplawski et al.

[11] **Patent Number: 5,879,173**

[45] **Date of Patent: Mar. 9, 1999**

[54] **REMOVABLE TRANSCEIVER MODULE AND RECEPTACLE**

[75] Inventors: **Daniel S. Poplawski**, Montgomery; **James W. McGinley**, Barrington; **Patrick B. Gilliland**, Chicago, all of Ill.

[73] Assignee: **Methode Electronics, Inc.**, Chicago, Ill.

[21] Appl. No.: **954,679**

[22] Filed: **Oct. 17, 1997**

Related U.S. Application Data

[63] Continuation of Ser. No. 515,813, Aug. 16, 1995, which is a continuation-in-part of Ser. No. 485,310, Jun. 7, 1995, Pat. No. 5,734,558, which is a continuation-in-part of Ser. No. 417,914, Apr. 6, 1995, Pat. No. 5,717,533, which is a continuation-in-part of Ser. No. 372,780, Jan. 13, 1995, Pat. No. 5,546,281.

[51] **Int. Cl.**[6] **G02B 6/36**

[52] **U.S. Cl.** **438/138**; 385/92; 439/297; 439/354; 439/607; 439/372; 439/946

[58] **Field of Search** 439/74, 76.1, 64, 439/377, 108, 607, 609, 138, 354, 297, 372, 660; 385/92, 88, 89

[56] **References Cited**

U.S. PATENT DOCUMENTS

3,670,290	6/1972	Angele et al. .	
4,176,897	12/1979	Cameron	439/138
4,226,491	10/1980	Kazama	439/76.1
4,380,360	4/1983	Parmer et al. .	
4,388,671	6/1983	Hall .	
4,486,059	12/1984	Deyoung	439/92
4,652,976	3/1987	Fushimoto	439/64
4,663,603	5/1987	van Riemsdijk et al. .	
4,720,630	1/1988	Takeuchi	385/92
4,798,430	1/1989	Johnson et al. .	
4,811,165	3/1989	Currier et al. .	
4,847,711	7/1989	Inoue	439/138
4,849,944	7/1989	Matsushita	439/924.1
5,011,246	4/1991	Corradetti et al. .	
5,011,425	4/1991	van Zanten et al. .	
5,013,247	5/1991	Watson	439/55
5,039,194	8/1991	Block et al. .	
5,086,422	2/1992	Hagiya et al.	369/75.1

(List continued on next page.)

FOREIGN PATENT DOCUMENTS

228278	7/1987	European Pat. Off.	439/108
94308071.3	2/1994	European Pat. Off. .	
9204364.5	2/1992	United Kingdom .	

OTHER PUBLICATIONS

IBM Technical Disclosure Bulletin, vol. 34, No. 7B, p. 403, Dec. 1991.

IBM Technical Disclosure, vol. 29, No. 10, p. 4388, Mar. 1987.

James C. Pintner, Senior Attorney, Hewlett–Packard Company, letter dated Aug. 19, 1998.

Hewlett–Packard Optoelectronics Designer's Catalog (1991–1992).

(List continued on next page.)

Primary Examiner—Neil Abrams
Attorney, Agent, or Firm—David L. Newman

[57] **ABSTRACT**

A robust optoelectronic transceiver module which is quick, easy, and inexpensive to manufacture. The transceiver module has a main housing which consists of a potting box with potting material inserted therein. In addition, a circuit board is encased by the potting material. The circuit board has an optical subassembly mounted thereon. The optical subassembly extends outside of the potting box through a recess. Correspondingly, a recess cover is provided for forming a liquid tight seal between the recess cover, the potting box, and the optical subassembly. The module housing may be pluggable via release levers having detentes received in apertures of a receptacle and a pluggable connector of the module mated within the receptacle. The receptacle may include grounding means such as a ground clip mounted within the receptacle and a protective door to limit electromagnetic emissions.

44 Claims, 8 Drawing Sheets

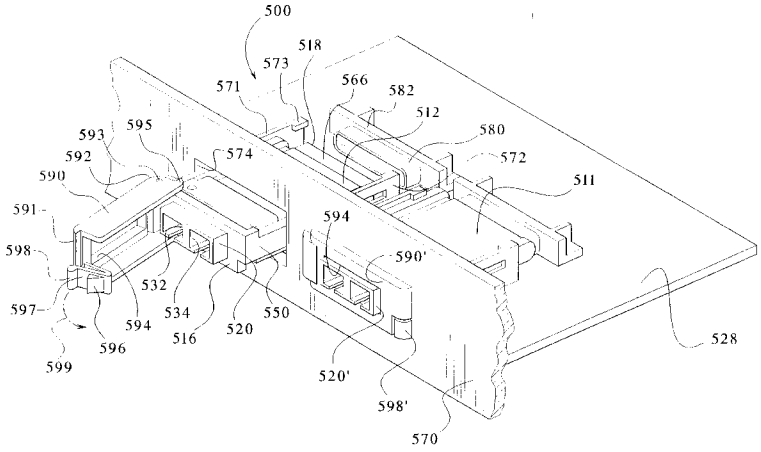

Nokia of America Corporation
IPR2023-00681, Ex. 1012
Ex. 1012.1

U.S. PATENT DOCUMENTS

5,099,307	3/1992	Go et al. .	
5,104,243	4/1992	Harding	389/92
5,107,404	4/1992	Tam .	
5,108,294	4/1992	Marsh et al.	439/76.1
5,117,476	5/1992	Yingst et al.	385/88
5,202,943	4/1993	Carden et al. .	
5,296,813	3/1994	Holmes et al. .	
5,305,182	4/1994	Chen	439/79
5,329,428	7/1994	Block et al. .	
5,337,391	8/1994	Lebby .	
5,337,398	8/1994	Benzoni et al. .	
5,345,530	9/1994	Lebby et al. .	
5,357,402	10/1994	Anhalt	361/753
5,416,871	5/1995	Takahashi et al. .	
5,598,319	1/1997	Lee	439/31

OTHER PUBLICATIONS

Steve Joiner, Ph.D. Deposition Transcript and Exhibits dated May 12, 1998.

Errata Sheet of Steve Joiner dated Jun. 19, 1998.

Hewlett–Packard Information for HP 5061–5800 Fiber Optic Interface converter including Declaration of Steve Joiner, Ph.D.

Thomas & Betts Catalog 1988 for Info–Lan Modem.

Encapsulation of Electronic Devices and Components by Edward R. Salmon.

AMP "PC Board Connectors" Product Catalog 82759 published Jun. 1991.

Vixel Corporation Response Chart (Methode Electronics, Inc. v. Vixel Vorp. C98 20237 RMW EAI) Including explanation of alleged prior art references for related U. S. Patent No. 5,717,533 and 5,734,558 and citation of additional references; prepared Oct. 16, 1998.

FIG.1

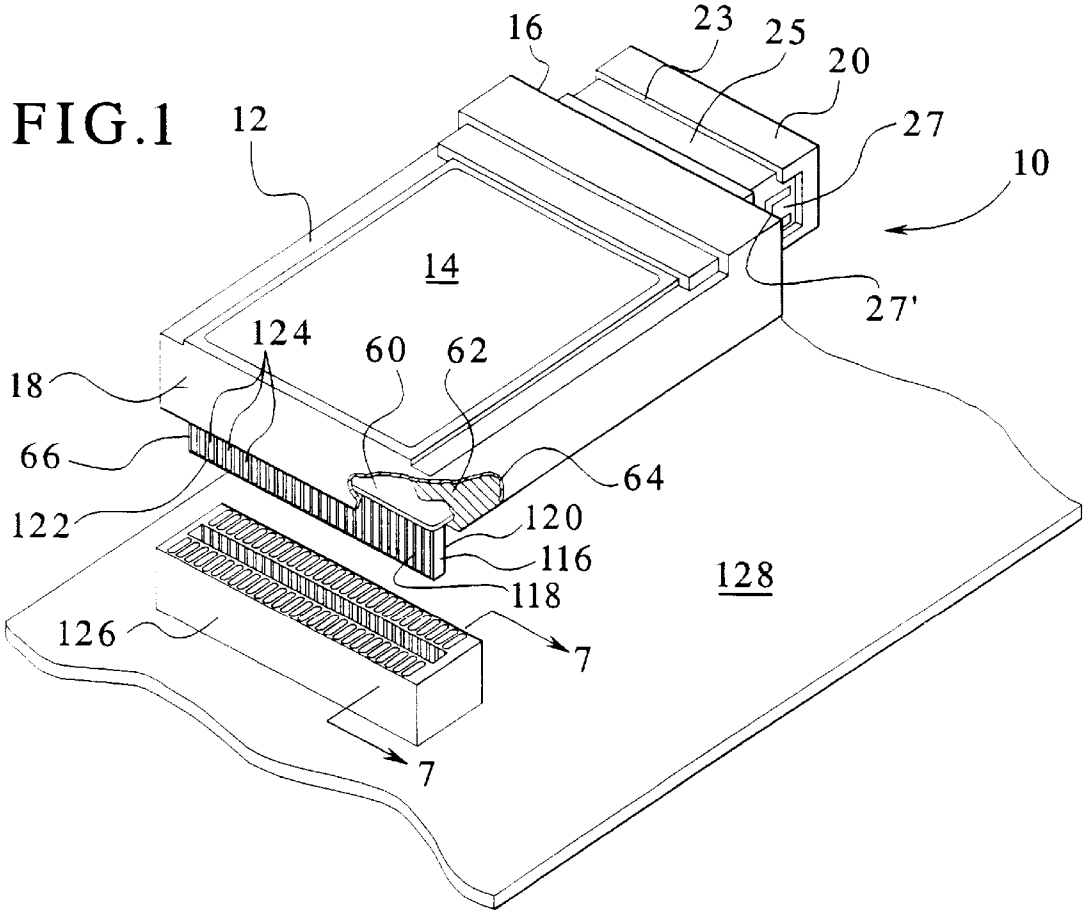
16
23
25
20
12
27
10
14
27'
124
60
62
18
66
64
122
120
116
118
128
126
7
7

FIG.2

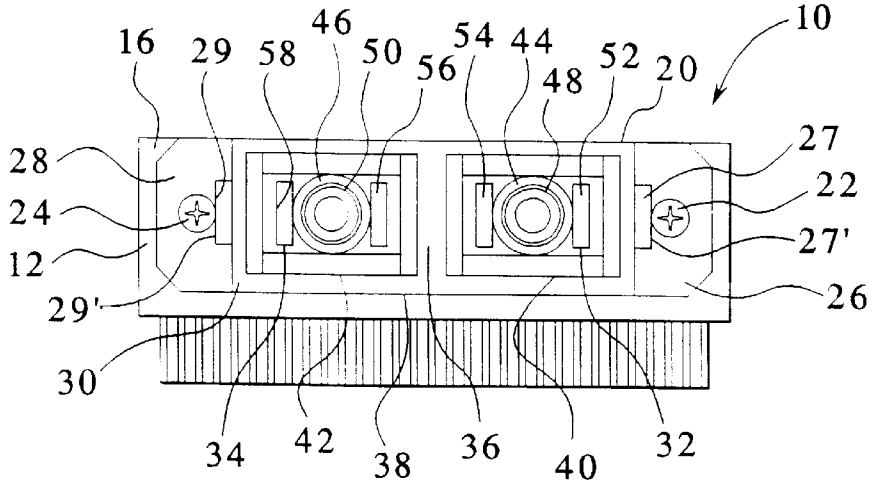
16
29
58
46
50
56
54
44
48
52
20
10
28
27
24
22
12
27'
29'
26
30
34
42
38
36
40
32

FIG.3

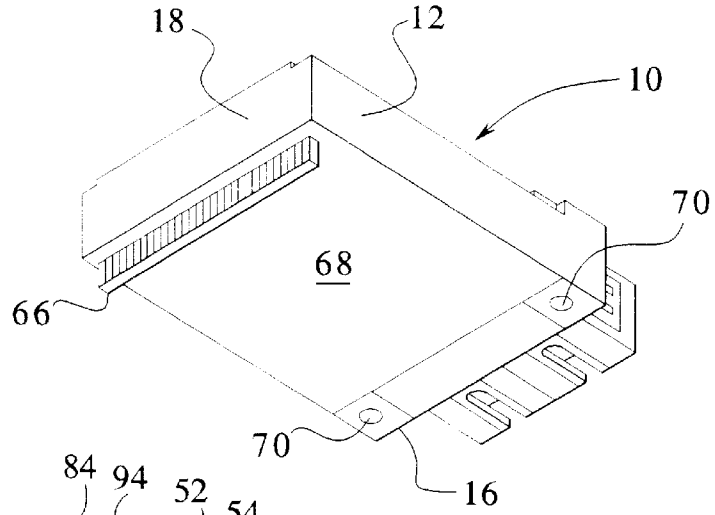

FIG.4

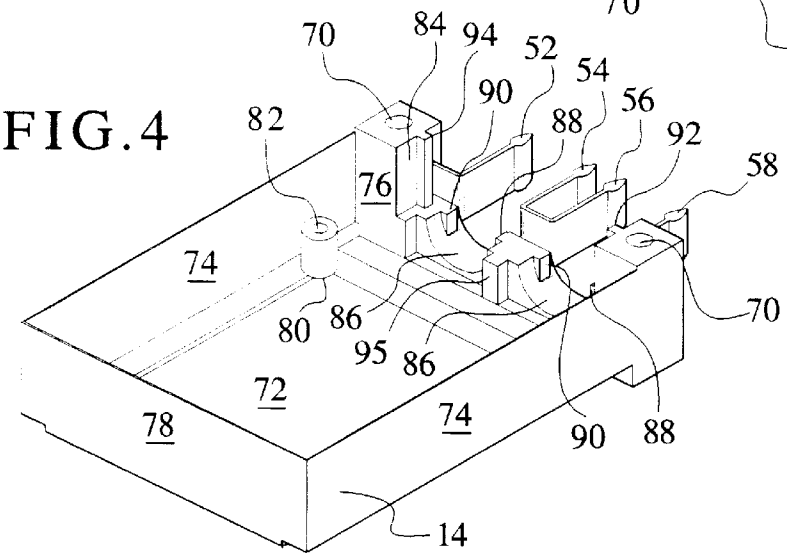

FIG.5

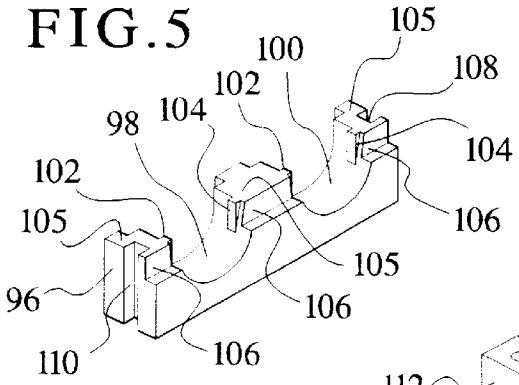

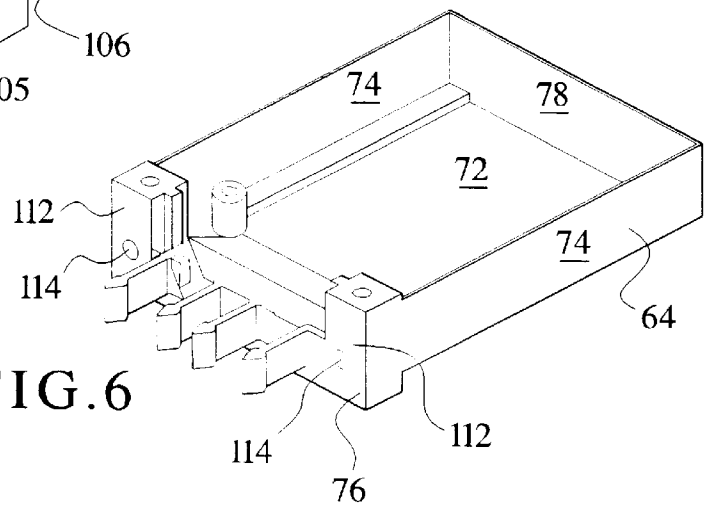

FIG.6

FIG.7

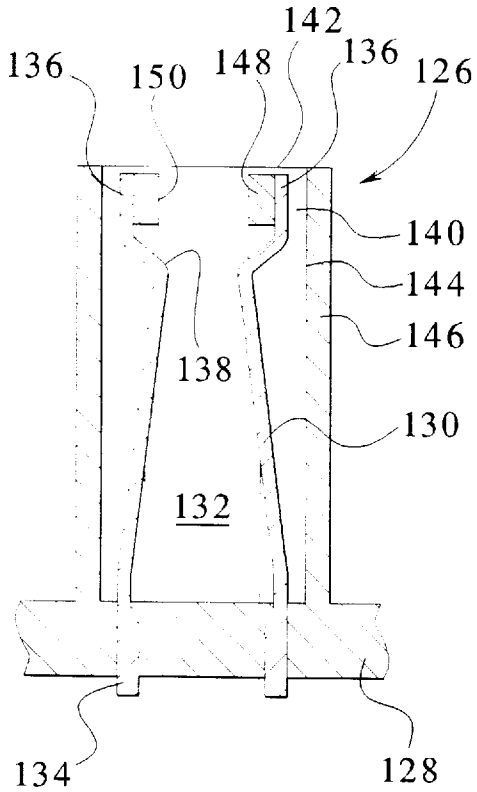

FIG.9

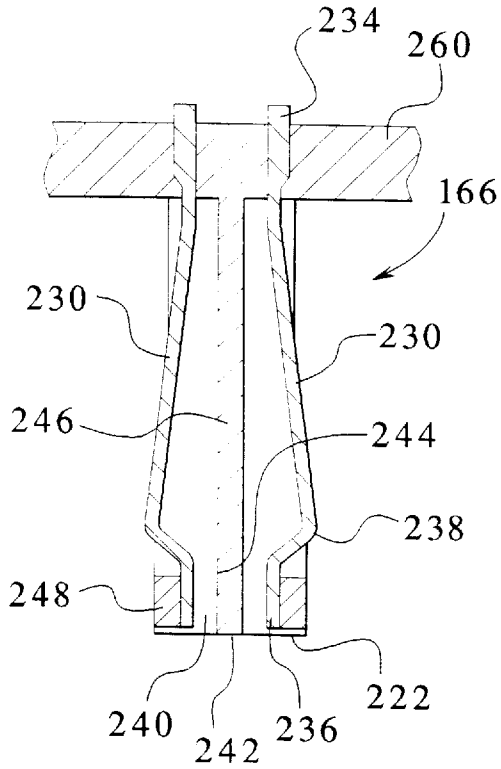

FIG.8

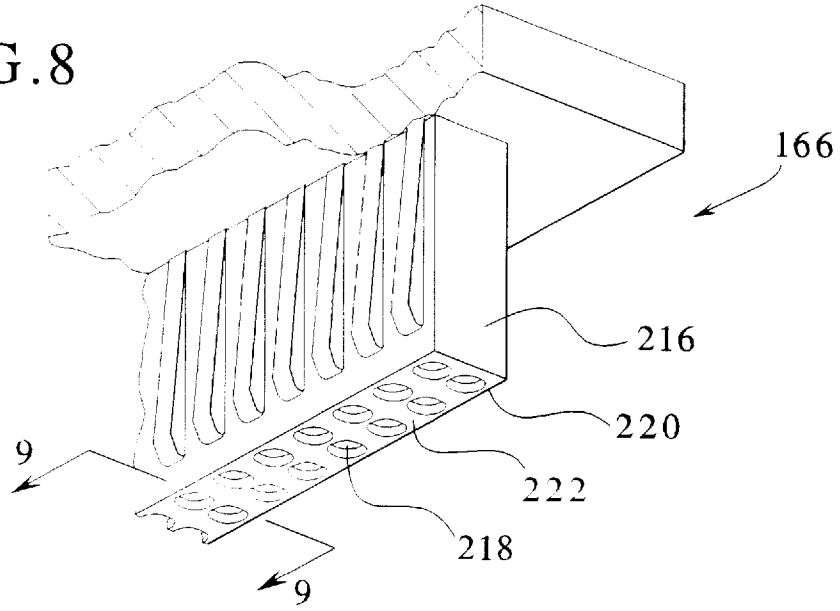

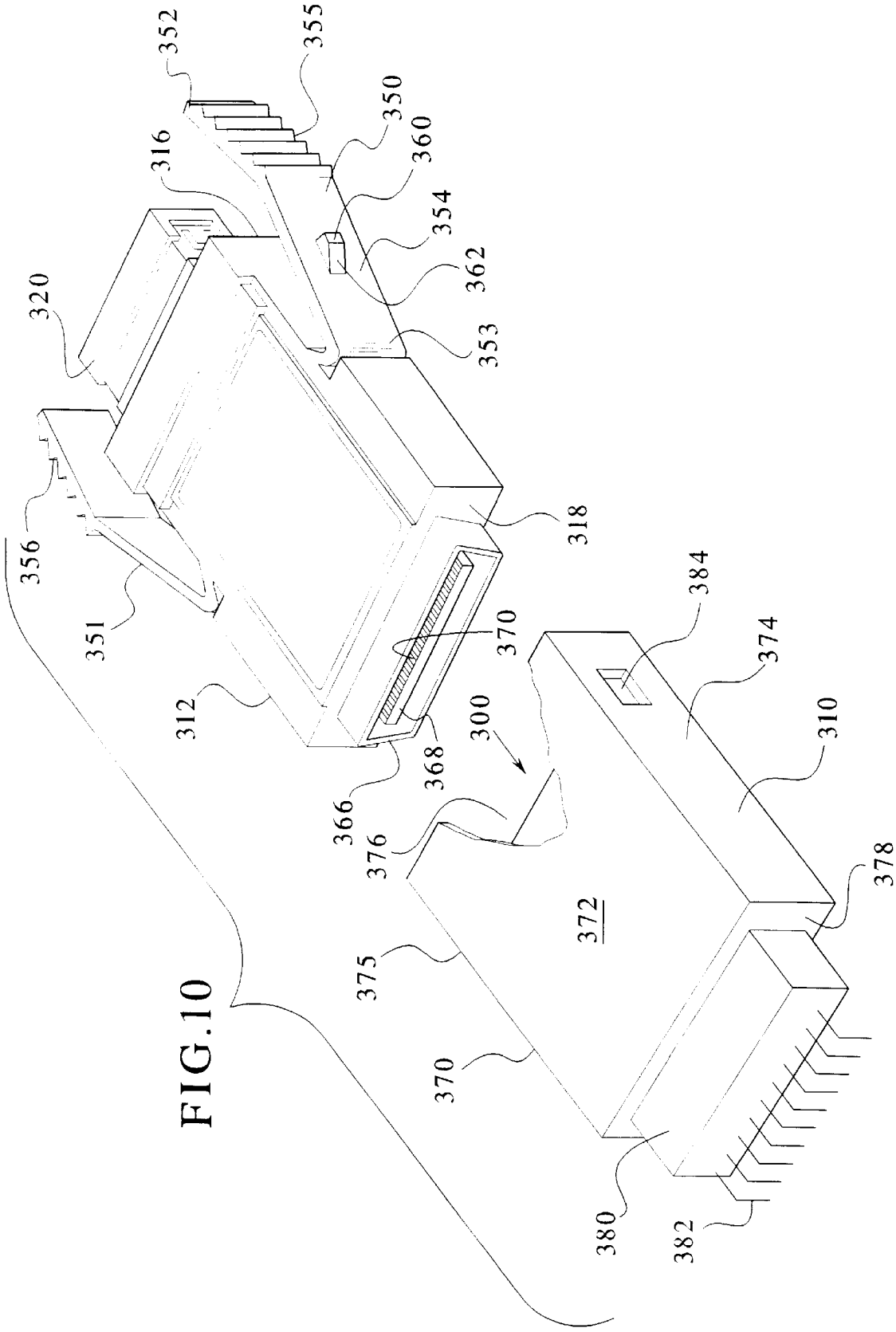
352
355
350
360
316
354
362
320
353
356
318
351
384
370
374
312
300
310
368
366
376
378
372
375
370
380
382

FIG.10

FIG.11

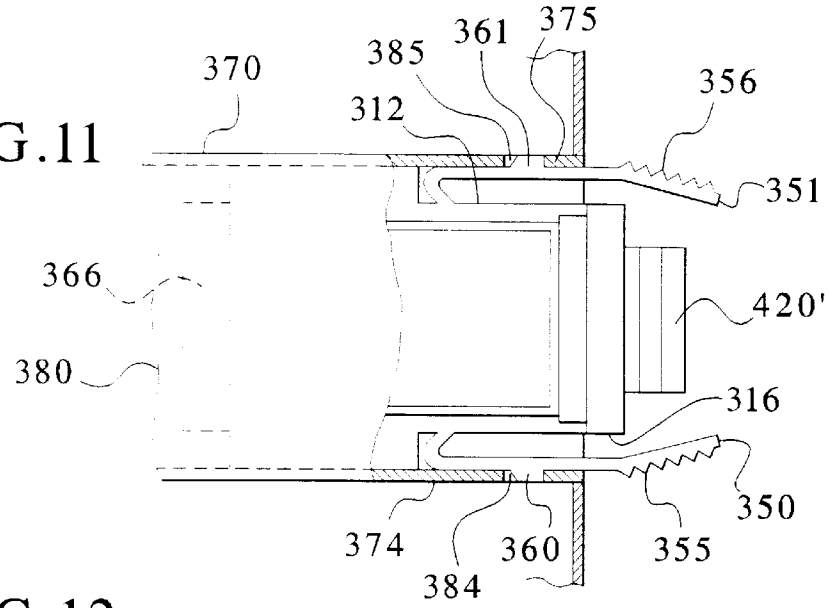

FIG.12

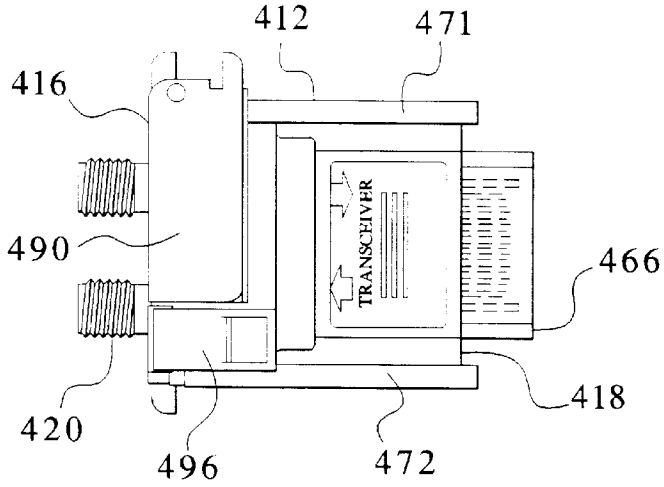

FIG.13

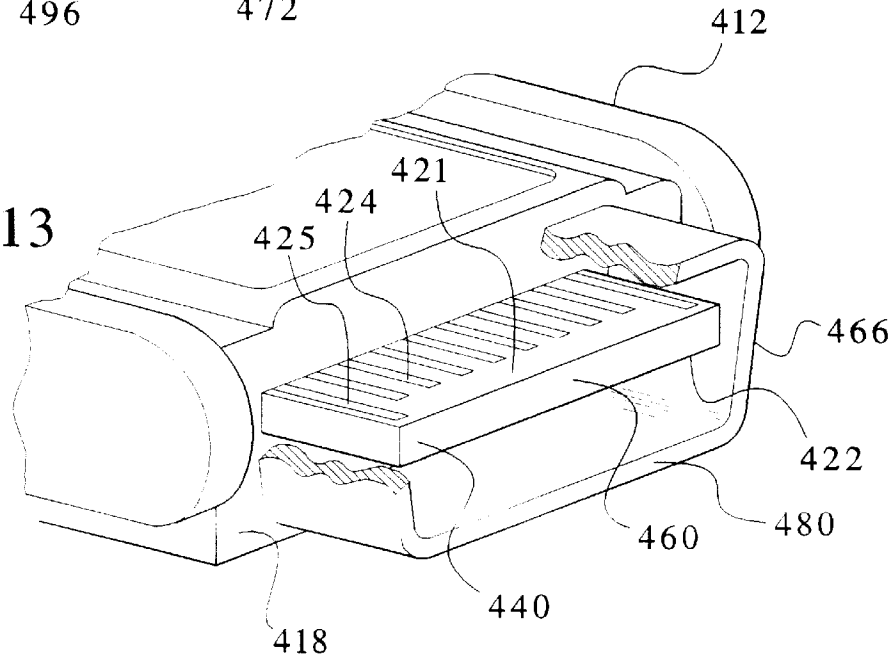

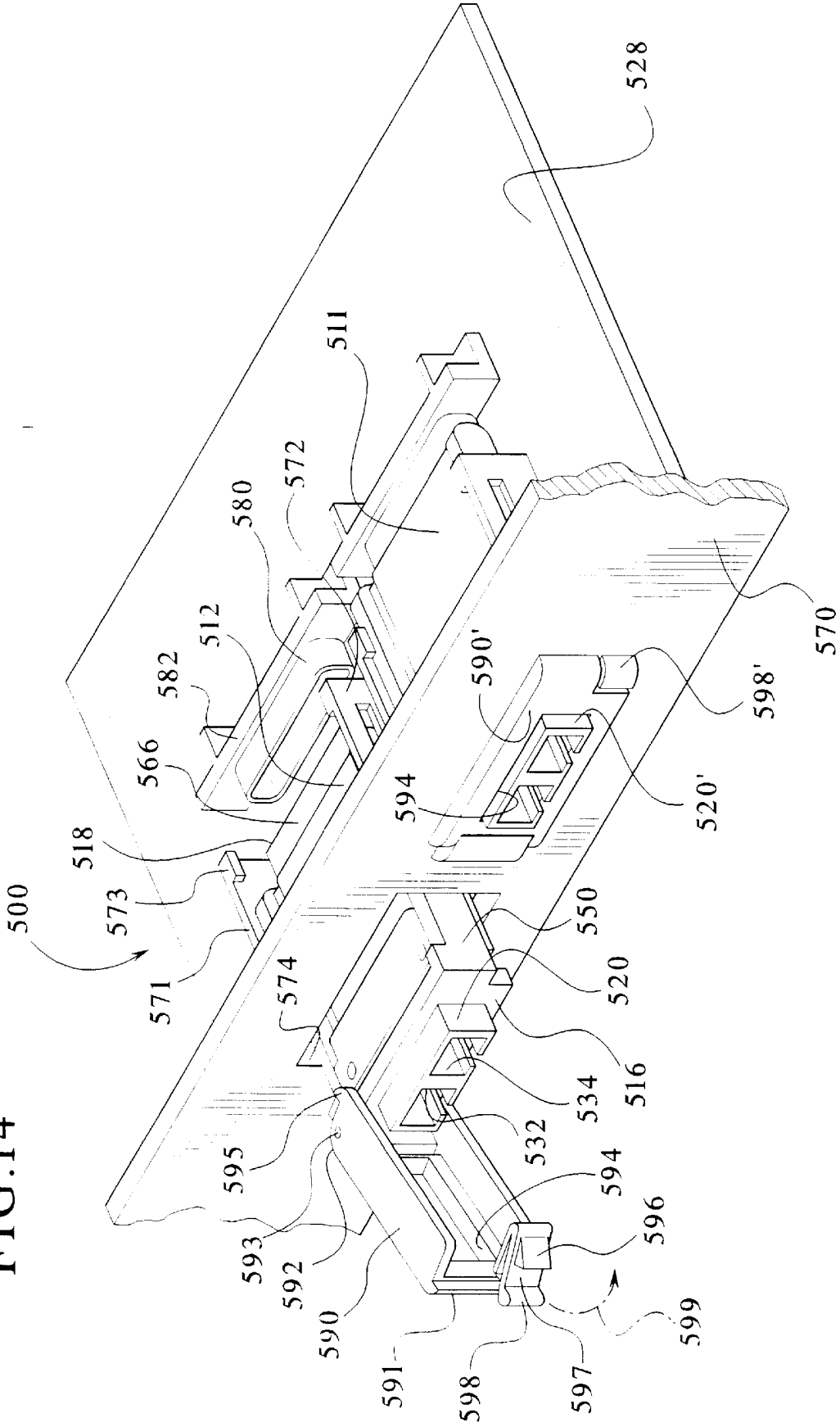
528
511
572
580
512
582
566
518
573
500
571
574
595
593
592
590
591
598
597
599
596
594
532
534
516
520
550
594
590'
520'
598'
570

FIG.14

FIG.15

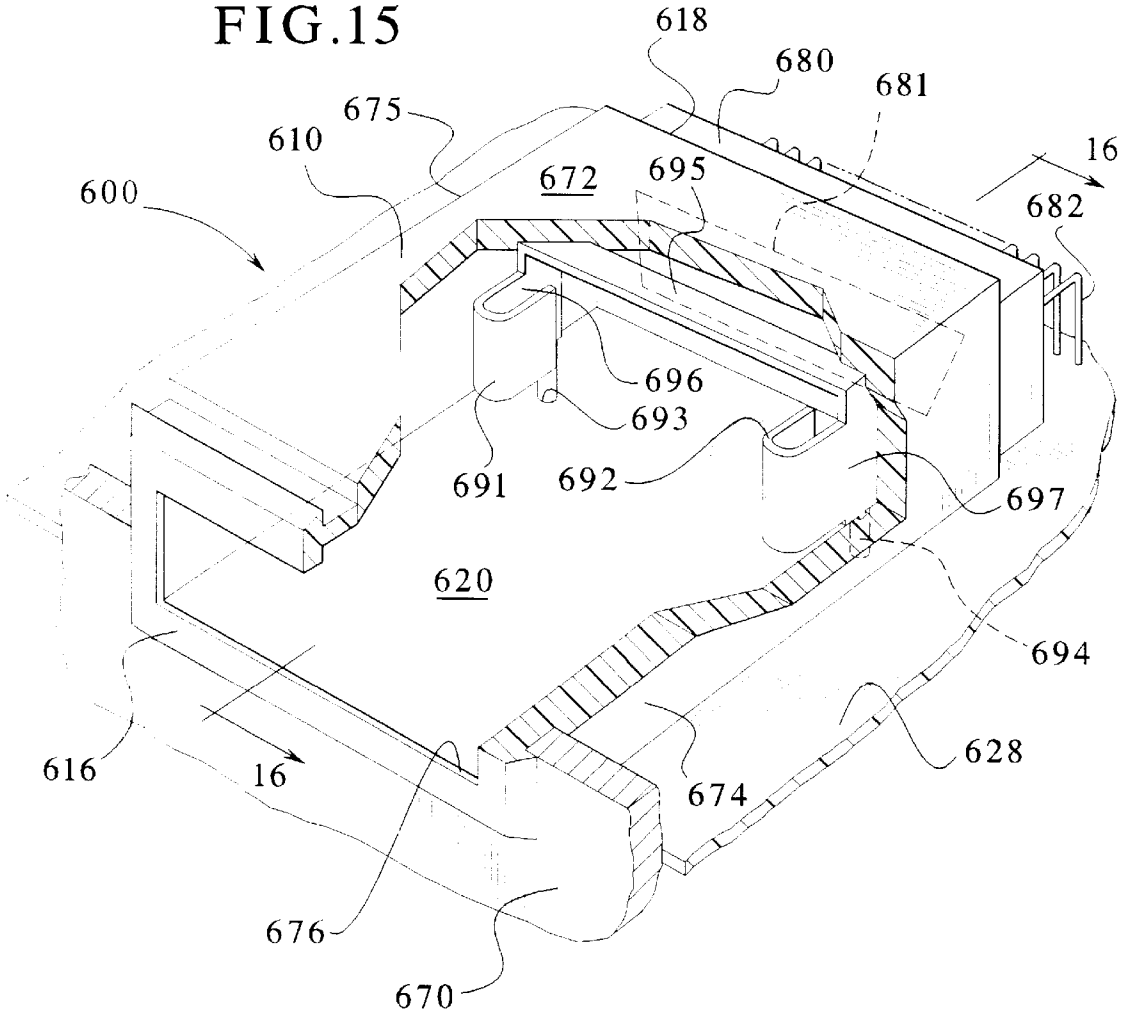
618
680
681
675
610
672
695
16
600
682
696
693
691
692
697
620
694
616
16
674
628
676
670

FIG.16

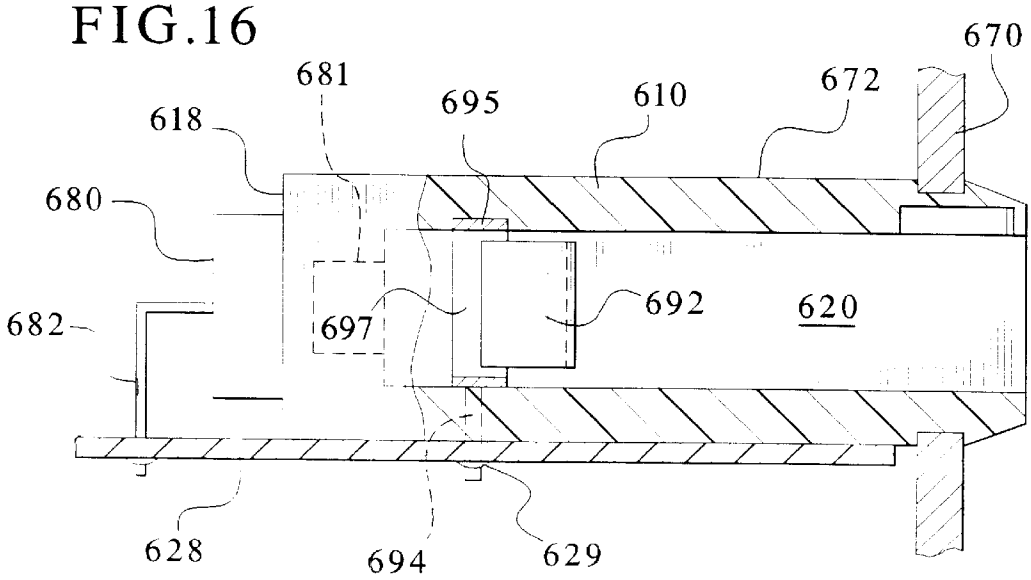
670
681
695
610
672
618
680
692
620
682
697
628
694
629

FIG.17

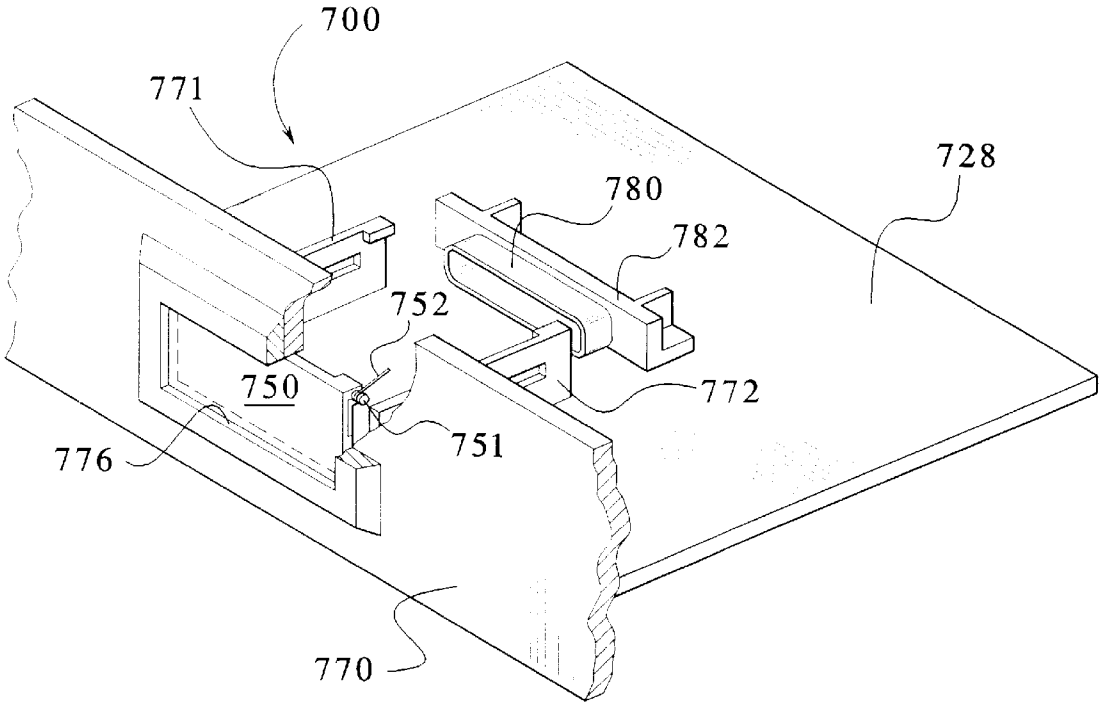
700
771
728
780
782
752
750
772
751
776
770

FIG.18

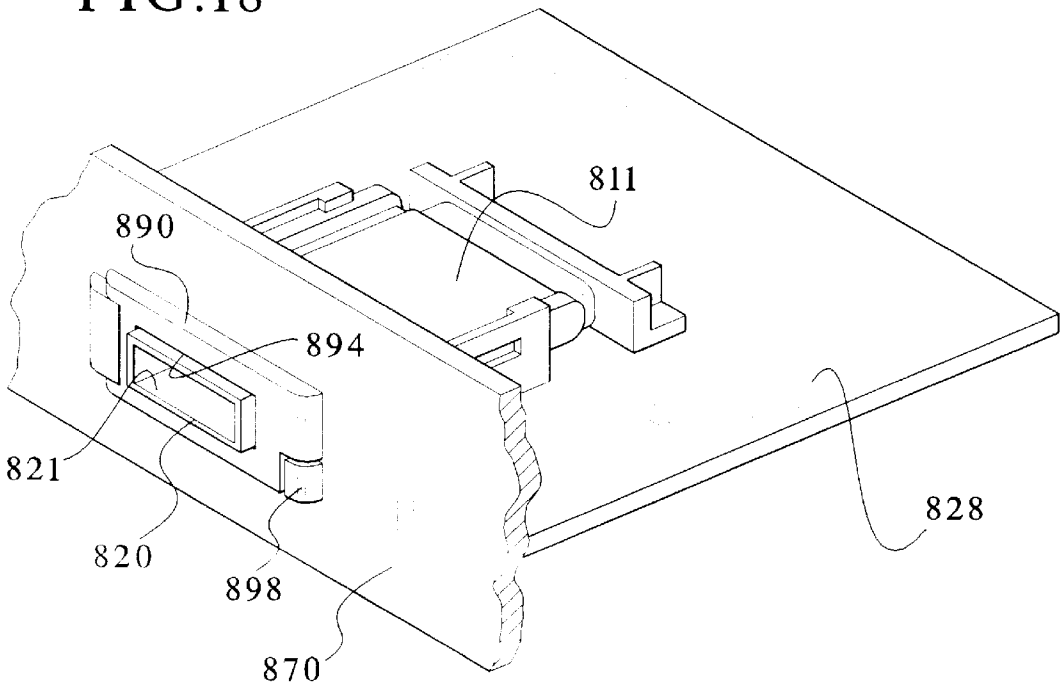
811
890
894
821
820
898
870
828

REMOVABLE TRANSCEIVER MODULE AND RECEPTACLE

This Application is a Continuation of U.S. Ser. No. 08/515,813, filed Aug. 16, 1995, which is a Continuation-In-Part of U.S. Ser. No. 08/485,310, filed on Jun. 7, 1995, now U.S. Pat. No. 5,734,558 which is a Continuation-In-Part of U.S. Ser. No. 08/417,914 filed Apr. 6, 1995, now U.S. Pat. No. 5,717,533 which is a Continuation-In-Part of U.S. Ser. No. 08/372,780, filed Jan. 13, 1995 now U.S. Pat. No. 5,546,281.

BACKGROUND OF THE INVENTION

This invention relates generally to optoelectronic transceiver modules and in particular, it relates to an optoelectronic transceiver module, and its method of manufacture, whereby the module is inexpensive to manufacture, has a small yet robust package, and can be installed and replaced via a ribbon style connector for interchangeability and easy removal.

Optoelectronic transceiver modules provide for the bi-directional transmission of data between an electrical interface and an optical data link. The module receives electrically encoded data signals which are converted into optical signals and transmitted over the optical data link. Likewise, the module receives optically encoded data signals which are converted into electrical signals and transmitted onto the electrical interface.

Normally, the transceiver is mounted onto one of the circuit card assemblies of a host computer, input/output system, peripheral device, or switch. Therefore, as with all electronic equipment, there is a need for a transceiver having an outer package design which occupies as little circuit card surface area as possible.

In addition, there is a need for a transceiver module which is highly reliable and durable. One method presently used to ensure reliability and durability is to encapsulate the electronics of the transceiver within an insulative potting material. Encapsulating the transceiver electronics results in reducing vibration sensitivity and prevents unauthorized personnel from meddling with the module's electronics.

Presently, the molding of the potting material around the transceiver electronics is performed by placing the electronics within a silicone mold. Any portion of the electronics which extends outside of the mold is caulked, by hand, with a silicone compound which provides for a liquid tight seal. Once the mold is sealed, potting material is inserted therein. After the potting material is allowed to cure, the silicone mold is peeled away from the newly formed module.

The above described prior art molding process has several drawbacks. For example, it is time consuming and results in a transceiver module which has a pitted outer surface. In addition, the silicone mold used in the molding process has a limited life of only three to five modules before a new mold must be employed.

The optoelectronic module is provided with a plurality of electrical pins for forming an electrical connection with a circuit card assembly. The electrical pins consist of solid wire strands with each pin having one end connected to the electronics within the module and the other end protruding from the module's potting material.

The portion of each pin which protrudes from the potting material is either soldered within a plated through-hole, which is provided by the circuit card assembly, or placed within a connector which grasps onto the pin. However, the

flimsy wire pins are very susceptible to deformation during both the normal handling of the module and its removal and installation onto a circuit card assembly. Thus, the flimsy pins currently used in the prior art are difficult and time consuming to attach to a circuit card assembly since they must be periodically inspected and realigned. Furthermore, the pins may break if they are realigned too many times.

In addition to the electrical pins, the module also is equipped with two mounting ports for physically securing the module onto the circuit card assembly. The module is placed onto the circuit card assembly so that the mounting ports align with holes provided in the circuit card assembly. Once the module is properly aligned, screws are inserted through the holes in the circuit card assembly and into the mounting ports of the module. The screws are then tightened until the module is firmly affixed to the circuit card assembly.

Similarly, to remove the module from the circuit card assembly, the screws must be removed and the wires either unsoldered from the circuit card or pulled from the connector which is a timely and expensive process requiring multiple components. In fact, it is common for the entire circuit card assembly to be changed in order to change the transceiver module or the media interface.

Therefore, there is a need for a transceiver module which provides for a small, yet robust package, which is inexpensive to manufacture and can easily and quickly be installed and removed from a circuit card assembly in the field. The present invention is such an apparatus.

In view of the above, it is an object of the present invention to provide a small transceiver module package.

It is another object of the present invention to provide a module package that has a robust and tamper resistent design.

Also, it is an object of the present invention to provide a module which can quickly be installed and removed from a circuit card assembly.

Another object of the present invention is to provide a module package design that can quickly and easily be produced.

A further object of the present invention is to provide a module package that can be produced inexpensively.

Furthermore, it is an object of the present invention to provide a module with a coating which dissipates an electrostatic discharge and serves as an electromagnetic shield.

As well, it is an object of the present invention to provide a module which is easily and quickly pluggable and removed to and from a housing.

Another object of the present invention is to provide a receptacle to receive the module having a grounding means.

It is also an object of the present invention to provide a receptacle having a means for preventing the escape of electromagnetic radiation from the receptacle.

Furthermore, it is an object of the present invention to provide an interchangeable transceiver module to provide electrical or fiber optic connection.

SUMMARY OF THE INVENTION

In one form of the invention, a robust optoelectronic transceiver module is provided which is quick, easy, and inexpensive to manufacture. The transceiver module has a main housing which consists of a potting box with potting material inserted therein. In addition, a circuit board is encased by the potting material.

The invention further provides for an optical subassembly to be mounted on a circuit board. In addition, the potting box has a recess which allows the optical subassembly to extend outside of the potting box. Furthermore, a recess cover may be provided for forming a liquid tight seal between the recess cover, the potting box, and the optical subassembly.

The optoelectronic transceiver module may also have a ribbon style connector attached to the circuit board and protruding from the main housing. The ribbon style connector may protrude from either the bottom or one end of the main housing. In addition, the ribbon style connector may comprise of either a male ribbon style connector or a resilient male ribbon style connector.

In another form of the invention, an optoelectronic transceiver module is provided which mounts onto a circuit card assembly. The module has a main housing with a bottom. Protruding from the bottom of the main housing is a ribbon style connector which allows for quickly installing and replacing the module from the circuit card assembly.

In yet another form of the invention, a method of assembling an optoelectronic transceiver module is provided. The steps of the method consists of placing a circuit board within a potting box and injecting potting material within the potting box. In addition, the circuit board may be affixed within the potting box after the circuit board is positioned within the potting box. Furthermore, a liquid tight recess cover may be mounted within the potting box's recess after the circuit board is positioned within the potting box.

Also, the method of manufacture provides for coating the potting box with a conductive metal before the circuit board is placed within the potting box or after the potting material is injected within the potting box. Moreover, a connector shell may be mounted onto the potting box after the potting material is injected within the potting box.

In still another form of the invention, a method of assembling an optoelectronic transceiver is provided which includes the steps of affixing a circuit board within a housing and securing a conductive metal coating onto the housing.

In another form of the invention, a potting box is provided for potting optoelectronic components which include an optical subassembly. The potting box includes a wall having a recess which allows the optical subassembly to extend outside of the potting box. In addition, a recess cover is provided for forming a liquid tight seal between the recess cover, the potting box, and the optical subassembly. Furthermore, the invention provides for the potting box to have a standoff column for mounting a circuit board within the potting box and an alignment guide for engaging a groove within the recess cover.

In still another form of the invention, a housing is provided including release levers having detentes which mate with an aperture of a receiving receptacle. The release lever includes a first end integrally molded to the housing and a second distal end protruding outward away from the housing having a gripping portion and intermediate the first end and the second end and intermediate portion having a detente protruding perpendicular from the surface of the intermediate section. The housing of the transceiver includes a first end and a second end. At the first end of the housing is a transceiver connector for receiving fiber optic plugs. At the second end of the housing is a pluggable connector.

In another form of the invention, a transceiver module and receptacle assembly is provided comprising a transceiver module housing having a first end and second end, a latching means attached adjacent the first end, a pluggable connector at the second end and a grounding means associated with the receptacle. A receptacle housing is provided defining a chamber and the grounding means of the receptacle includes a ground tab protruding within the chamber. The ground tab is attached to an arm which is molded within the receptacle housing. The receptacle housing has a first end having a protective door mounted thereto. The door is hinged adjacent the top surface of the receptacle housing. The transceiver module housing includes a metallized grounding portion to come in contact with the grounding means of the transceiver receptacle in order to provide grounding of the transceiver module to the receptacle. The transceiver module external surface is metallized and upon insertion within the receptacle, the metallized transceiver module housing abuts against a ground tab protruding within the receptacle chamber in order to ground the transceiver module to the receptacle. The latching means includes release levers attached to the sides of the transceiver module housing and latching to the interior surface of the receptacle. A transceiver connector is attached to the first end of the transceiver module housing. The transceiver connector includes a fiber optic or electrical plug receptacle. The transceiver module includes an optoelectronic subassembly for an optical media interface or electronic subassembly for an electrical media interface.

In still another form of the invention a transceiver module receptacle is provided comprising a receptacle housing having a first end and a second end, a module receiving opening at the first end and an electrical connector at the second end. The first end includes a door hingedly attached at the first end. The door includes posts projecting from the edges for mounting the door to the housing. Spring means are mounted to the posts of the door. The receptacle housing includes an inner chamber having walls defining the chamber. A ground surface protrudes from the walls for contacting the grounding means of a transceiver module. The grounding surface is molded into the walls of the housing. The ground surface includes posts protruding through a bottom surface of the receptacle housing for mounting the receptacle to a motherboard.

In another form of the invention a transceiver module is provided comprising transceiver module housing having a first end and a second end, a latching means attached adjacent the first end and a pluggable connector at the second end. The transceiver module includes a transceiver connector at the first end. The transceiver connector includes a modular port for receiving various media transducers. The media transducer includes a fiber optic plug receptacle and an optoelectronic subassembly or the media transducer includes an electrical plug receptacle and an electrical subassembly. The pluggable connector includes a D-shaped shroud surrounding a circuit board protruding transversely from the second end and having electrical contacts attached thereto. The pluggable connector includes ground contacts offset from adjacent electrical contacts.

Various means for practicing the invention and other advantages and novel features thereof will be apparent from the following detailed description of an illustrative preferred embodiment of the invention.

BRIEF DESCRIPTION OF THE DRAWINGS

There is shown in the drawings a preferred embodiment of the present invention, wherein like numerals in the various figures pertain to like elements, and wherein:

FIG. 1 is an enlarged perspective view of an optoelectronic transceiver module in accordance with the present invention and having a partial fragmentary view depicting the module's circuit board and potting material;

FIG. **2** is a front view of the optoelectronic transceiver module depicted in FIG. **1**;

FIG. **3** is a bottom perspective view of the optoelectronic transceiver module depicted in FIG. **1**;

FIG. **4** is an enlarged perspective view of the potting box used in the manufacture of the optoelectronic module depicted in FIGS. **1–3**;

FIG. **5** is a perspective view of the recess cover used with the potting box of FIG. **4**;

FIG. **6** is another enlarged perspective view of the potting box of FIG. **4**;

FIG. **7** is an enlarged cut-away side view of the female ribbon style connector taken along line **7—7** of FIG. **1**;

FIG. **8** is an enlarged perspective view, along with a partial fragmentary view, of a resilient male ribbon style connector for use with the optoelectronic transceiver module of FIGS. **1–3**;

FIG. **9** is a cut-away side view of the resilient male ribbon style connector taken along line **9—9** of FIG. **8**;

FIG. **10** is a perspective view of an alternative embodiment of the present invention shown in an unmated orientation;

FIG. **11** is a plan view of the alternative embodiment shown in FIG. **10** but in a mated orientation.

FIG. **12** is a plan view of an alternative embodiment of a transceiver module having an electrical interface of the present invention;

FIG. **13** is an enlarged perspective view of an end of the transceiver module of FIG. **12**;

FIG. **14** is a perspective view of an alternative embodiment of a transceiver module of the present invention mounted to a receptacle assembly;

FIG. **15** is a perspective, partially cut-away view of a receptacle of the present invention;

FIG. **16** is a side elevation cut-away view of FIG. **15** taken at line **16—16**;

FIG. **17** is a perspective view of an alternative embodiment of a receptacle assembly; and

FIG. **18** is a perspective view of another alternative embodiment of a receptacle assembly of the present invention.

DETAILED DESCRIPTION OF THE PRESENTLY PREFERRED EMBODIMENTS

Referring to the drawing, and particularly to FIG. **1**, an enlarged perspective view of an optoelectronic transceiver module **10** in accordance with the present invention is depicted. The module **10** has a main housing **12** which generally has the shape of an oblong box. The main housing **12** has a generally rectangular top **14** with a first end **16** and an opposite second end **18** extending perpendicularly from the top. Attached to the first end **16** of the main housing **12** is a transceiver connector **20** for receiving fiber optic plugs.

Turning to FIG. **2**, a front view of the optoelectronic transceiver module **10** is depicted. The transceiver connector **20** is attached to the first end **16** of the main housing **12** by two screws **22,24**. The two screws **22,24** extend through the transceiver connector's mounting ears **26,28** and into the main housing **12**. Extending perpendicularly from the mounting ears **26,28** is a generally rectangularly shaped connector shell **30**. The connector shell **30** provides two receptacles **32,34** for receiving fiber optic connector plugs. The receptacles **32,34** are formed by the connector shell **30** along with a divider wall **36** which extends along the center of the connector shell. Furthermore, located in the bottom **38** of each receptacle **32,34** is a keying channel **40,42** which extends toward the first end **16** of the main housing.

In the preferred embodiment, the receptacles **32,34** of the connector shell **30** are specifically dimensioned to receive an SC duplex plug. Therefore, the keying channels **40,42** ensure that an SC plug will be inserted so that receptacle **32** will only accept a plug for sending data and receptacle **34** will only accept a plug for receiving data.

Extending from the main housing **12** and into each of the receptacles **32,34** is an optical subassembly **44,46**. As previously indicated, the optical subassembly **44** is for sending transmissions over a data link and the optical subassembly **46** is for receiving transmissions over a data link. In order to facilitate the connection between the transceiver **10** and the data links, each optical subassembly has a ferrule receiving portion **48,50**. The ferrule receiving portion **48,50** couples with the SC plug. Furthermore, the transceiver's latch members **52,54,56**, and **58** firmly hold the SC plug in contact with connector **20**.

The actual sending and receiving of optically encoded data is performed by a laser diode within the optical subassembly **44** and a photo diode within the optical subassembly **46**. Both the laser diode and the photo diode are electrically connected to a circuit board which is mounted within the main housing **12**.

Turning back to FIG. **1**, a portion of the circuit board **60** is depicted. Incorporated onto the circuit board **60** is circuitry for transmitting and receiving optically encoded data (circuitry not shown). The circuit board **60** is encased in potting material **62** and a potting box **64** which forms the main housing **12**. The potting material **62** encases the circuit board **60** such that only the circuit board's male ribbon style connector **66** extends from the potting material **62**.

Turning to FIG. **3**, a perspective view of the bottom **68** of the transceiver module **10** is depicted. In the preferred embodiment, the bottom **68** has two mounting ports **70,70** which are adjacent to the first end **16** of the main housing **12**. In addition, the male ribbon style connector **66** protrudes perpendicularly from the bottom **68** and is adjacent to the second end **18** of the main housing **12**.

In an alternative embodiment, the ribbon style connector **66** may protrude perpendicularly from the second end **18** of the module **10** so that it can be connected to a circuit card assembly in a direction which is parallel to the direction of insertion of the optic plugs into the module's receptacles. However, in this alternative embodiment, another recess cover will be needed in order to prevent potting material from escaping the second end of the potting box.

Referring to FIG. **4**, an enlarged perspective view of the optoelectronic module's potting box **64** is depicted. The potting box **64** forms the outer housing of the optoelectronic module. Thus, the potting box generally has the shape of an oblong box with a rectangular bottom **72**, two parallel side walls **74,74**, a first end wall **76**, and an opposite second end wall **78**. In a preferred embodiment, the potting box **64** is injection molded of a polymer material such as VALOX, STANYL, or any other glass-filled heat resistent material which can withstand solder reflow temperatures. In addition, it is preferred that the potting box **64** be either plated, wet plated, or vacuum metalaled with an aluminum or stainless steel coating in order to dissipate an electrostatic discharge and provide for electromagnetic shielding. As well, the transceiver connector **20** (FIG. **1**) may be plated, wet plated, or vacuum metalized, in order to reduce emissions and enhance grounding of the module. Such metalization of the

connector **20** can bring the module in compliance with FCC Rules, Part 15. In a preferred embodiment, the connector **20** is metalized separately from the potting box **64** so that each attachment portion is metalized and provides for conductivity between the parts. As the connector **20** will be attached to a chassis containing fiber optic connectors which are at ground potential, the connector will ground the metalized potting box **64** which is attached to a daughter board. Such grounding enhances the module's ability to dissipate electrostatic discharge and provide for electromagnetic shielding. The transceiver connector **20** also includes a grounding clip **25** attached at the slot **23**.

As previously indicated, all of the transceiver's latch members **52**, **54**, **56**, and **58** extend from the first wall **76** of the potting box **64**. Also, the first end wall **76** of the potting box furnishes the mounting ports **70**,**70** which are located on the bottom of the main housing. In a preferred embodiment, the latch members **52**, **54**, **56** and **58** are integrally molded with the potting box **64**.

Circuit board standoff columns **80** are also provided by the potting box **64** (only one standoff column is depicted in FIG. **4**). Each standoff column protrudes from the bottom **72** of the potting box **64** and is positioned next to the first end wall **76** and one of the side walls **74**,**74** for supporting the circuit board **60**. The standoff columns **80** have a length equal to approximately half the depth of the potting box **64** with the distal end of the column having a circuit board mounting port **82**.

As depicted in FIG. **4**, the first wall **76** of the potting box **64** has a recess **84** for allowing the placement of the circuit board's optical subassemblies. The recess **84** has two semicircular through-ports **86**,**86**. Within each through-port **86**,**86** are two guide beams **88**,**90** which are positioned on each end of the through-port's semicircle for positioning the optical subassemblies **44**,**46**.

Also located on the first wall **74** are two recess cover alignment guide beams **92**,**94**. The alignment guide beans **92**,**94** border each side of the recess **84** and extend along the entire depth of the recess. The bottom of the recess **84** has three flat mating surfaces **95** (only two of the mating surfaces are depicted in FIG. **4**).

Correspondingly, referring to FIG. **5**, a recess cover **96** is depicted for placement within the recess located in the first wall of the potting box. Preferably, the recess cover **96** is made of the same material as the potting box and is either plated, wet plated, or vacuum metalized with an aluminum or stainless steel coating.

In FIG. **5**, the recess cover **96** has two semicircular through-ports **98**,**100**. Within each of the through-ports **98**,**100** are two guide beams **102**,**104** positioned on each end of the through-port's semicircle. Also, the top of the recess cover includes three flat mating surfaces **105**.

The recess cover **96** firmly mounts within the recess of the potting box's first wall so that the mating surfaces **95** and **105** of both the recess **84** and the recess cover **96** will abut each other. The recess cover **96** includes three indentions **106** which allow the cover to be positioned around the location where the latch members **52**, **54**, **56**, and **58** attach to the potting box. In addition, on each end of the recess cover **96** there are alignment grooves **108**,**110** which provide for sliding engagement with the alignment guide beams **92**,**94** bordering the recess within the potting box's first wall.

Referring back to FIG. **4**, during the manufacture of the transceiver module the circuit board is placed in the potting box **64** with the male ribbon connector protruding outside of the potting box and the circuit board's optical subassemblies protruding out of the recess **84** in the first wall **76**. The optical subassemblies **44**,**46** are properly positioned within the potting box **64** by the alignment guides **88**,**90** located within each through-port **86**,**86**.

Once positioned within the potting box **64**, the circuit board **60** is affixed by two screws which are mounted to the standoff columns **80** via the circuit board mounting ports **82**.

Once the circuit board **60** is secured within the potting box **64**, the recess cover **96** is mounted onto the first end wall **76**. The recess cover **96** is mounted by engaging its alignment grooves **108**,**110** with the potting box's recess cover alignment guide beams **92**,**94**. When the recess cover **96** is slid into position, the cover's through-ports **98**,**100** and associated alignment guide beams **102**,**104** will adjoin the circuit board's optical subassemblies **44**,**46**. Furthermore, due to the tight tolerances of both the potting box **64** and the recess cover **96**, a liquid tight seal will be formed between the potting box **64**, the recess cover **96**, and the optical subassemblies **44**,**46**. Thus, with the recess cover **96** in place, potting material is injected within the potting box **64** for encasing the circuit board **60**. The time to mold the module by the above method is reduced by approximately 90% over the prior art molding process because no hand caulking is needed to form the liquid tight seal.

Finally, referring to FIG. **6**, the connector shell **20** (See FIGS. **1** & **2**) is mounted onto the first end wall **76** of the potting box **64** after the potting material has cured. Alignment of the connector shell **20** is provided by two mounting posts **112**,**112**. Each mounting post **112** has a bore **114** which facilitates the attachment of the connector shell **20**, by the use of the previously mentioned screws, onto the potting box **64**.

In an alternative embodiment, the ribbon style connector **66** may protrude perpendicularly from the second end **18** of the module **10** so that it can be connected to a circuit card assembly in a direction which is parallel to the direction of insertion of the optic plugs into the module's receptacles. However, in this alternative embodiment, another recess cover will be needed in order to prevent potting material from escaping the second end of the potting box.

Referring back to FIG. **1**, the male ribbon style connector **66** protruding from the module **10** has a beam portion **116**, made of insulative material, which extends perpendicularly across the length of the circuit board **60**. The male ribbon style connector **66** also has a first side **118**, an opposite second side **120**, and a distal end **122**. Extending perpendicularly from the circuit board **60** on both the first side **118** and the second side **120** of the male ribbon style connector **66** are twenty-eight electrical contacts **124**. Each electrical contact **124** consists of a strip of conductive material which is affixed to the male ribbon style connector **66** and is electrically connected to the circuitry mounted on the circuit board **60**.

Correspondingly, the male ribbon style connector **66** couples to a female ribbon style connector **126** which is mounted onto the circuit card assembly **128**. Referring to FIG. **7**, an enlarged cut-away side view is shown of the female ribbon style connector **126** taken along line **7**—**7** of FIG. **1**. The female ribbon style connector **126** has two parallel rows of twenty-eight (28) contact beams **130**,**130** contained within a contact chamber **132** (only one contact from each row is depicted). Each contact beam **130** is constructed of a flat strip of conductive metallic material. Furthermore, each contact beam **130** has a first end **134**, a second distal end **136**, and a bend **138** which is located adjacent to the second end and extends toward the contact beam located in the opposite row.

The female ribbon style connector **126** is mounted onto the circuit card **128** such that the first end **134** of each contact beam **130** extends through the circuit card assembly. Likewise, the second end **136** of each contact beam **130** extends within a travel limitation slot **140** formed in the top **142** of the female ribbon style connector **126**. Each slot **140** provides a backstop **144**, consisting of one of the connector's walls **146**, and a frontstop **148**. Correspondingly, contact beams **130,130** are positioned in the chamber **132** such that the second end **136** of each contact beam **130** resiliently urges against the frontstop **148**.

In order to provide access to the contact beams **130,130** within the female ribbon style connector **126**, the top **142** of the connector has a slot **150** positioned between the two rows of contact beams. Correspondingly, in order to make an electrical connection between the female ribbon style connector **126** and the male ribbon style connector **166** depicted in FIG. **1**, the distal end **122** of the male ribbon style connector is inserted within the female connector's slot **150**. As the male ribbon style connector **66** is pushed further within the female connector's chamber **132** the two rows of contact beams **130,130** will be forced to separate further from each other. In addition, each contact beam **130** will resiliently urge against a corresponding electrical contact **124** mounted on the male ribbon style connector **66**. Thus, an electrical connection will be formed between the male ribbon style connector's electrical contacts **124,124** and the female connector's contact beams **130,130**.

Similarly, to disconnect the male ribbon style connector's electrical contacts **124,124** from the female connector's contact beams **130,130** the male connector **66** is simply pulled from the chamber **132** of the female connector. Once the male ribbon style connector **66** has been removed from the chamber **132**, the contact beams **130** of the female connector **126** will resiliently regain the configuration of FIG. **7**, whereby the second end **136** of each contact beam will abut its corresponding frontstop **148**.

Turning to FIG. **8**, an enlarged perspective view, along with a partial fragmentary view, is depicted of a resilient male ribbon style connector **166**. The connector **166** includes a beam type housing **216** having a first side **218**, an opposite second side **220**, and a distal end **222**. The resilient male ribbon style connector **166** in FIG. **8** serves as another embodiment of the male ribbon style connector depicted in FIGS. **1–3** wherein the male connector in FIG. **8** is resilient and the male connector in FIGS. **1–3** is non-resilient. It should be noted, however, that other means for quickly installing and replacing the module from a circuit card assembly may be used.

Referring to FIG. **9**, an enlarged cut-away side view of the resilient male ribbon style connector **166** is shown taken along line **9—9** of FIG. **8**. The male ribbon style connector **166** has two parallel rows of twenty-eight (28) contact beams **230,230** (only one contact from each row is depicted). Each contact beam **230** is constructed of a flat strip of conductive metallic material. Furthermore, each contact beam **230** has a first end **234**, a second distal end **236**, and a bend **238** which is located adjacent to the second end and extends away from the contact beam located in the opposite row.

The male ribbon style connector **166** is mounted onto the module's circuit board **260** such that the first end **234** of each contact beam **230** extends through the circuit board. In a preferred embodiment, the first end **234** of the contact **230** is inserted within a through-hole of the circuit board **260** which contains traces for providing an electrical connection from the contact **260** to components mounted on the board. Likewise, the second end **236** of each contact beam **230** extends within a travel limitation slot **240** formed in the top **242** of the resilient male ribbon style connector **166**. Each slot **240** provides a backstop **244**, consisting of the connector's support wall **246**, and a frontstop **248**. Corresponding, contact beams **230,230** are positioned such that the second end **236** of each contact beam **230** resiliently urges against the frontstop **248**.

Access for making an electrical connection with the contact beams **230,230** is provided since they protrude from the male ribbon style connector **166** in the area around the bends **238,238**. Correspondingly, in order to make an electrical connection between a female ribbon style connector and the resilient male ribbon style connector **166**, the distal end **222** of the male ribbon style connector is inserted within a slot provided by the female connector. As the male ribbon style connector **166** is pushed within the female connector, the two rows of contact beams **230,230** will be forced to compress towards each other. In addition, each contact beam **230** will resiliently urge against a corresponding electrical contact mounted within the female ribbon style connector. Thus, an electrical connection will be formed between the male ribbon style connector's electrical contact beams **230, 230** and the female connector's contact beams.

Similarly, to disconnect the resilient male ribbon style connector **166** from the female connector, the male connector is simply pulled from the female connector. Once the male ribbon style connector **166** has been removed, the contact beams **230,230** will resiliently regain the configuration of FIG. **9**, whereby the second end **236** of each contact beam will abut its corresponding frontstop **248**.

An alternative embodiment of the present invention is shown in FIG. **10** having a main housing **312**, having a first end **316** and a second end **318**. As discussed in the previous embodiments, the housing **312** includes optical subassemblies for sending transmission over a data link and receiving transmissions over a data link. The preferred embodiment is an optoelectronic transceiver, however, a simplex transmitter or receiver or multiple transmitters or receivers may be incorporated in the module housing of the alternative embodiment. At the first end **316** is a transceiver connector **320** for receiving fiber optic plugs. In an alternative embodiment, optical fibers may be directly attached to the module and the optical subassemblies therein. At the second end **318** is a pluggable connector **366**. In the preferred embodiment, the pluggable connector **366** is a D-shaped connector having a printed circuit board **368** having multiple contact traces **370** adhered thereto. The transceiver housing **312** is pluggable into receptacle **310** and is inserted into the receptacle **310** in direction of arrow **300**. The receptacle **310** includes a receptacle housing **370** having a top **372** and sides **374,375**. The receptacle housing **370** includes an open end **376** and a closed end **378**. At the closed end **378** of the receptacle housing **370** is a connector **380** for mating with the pluggable connector **366**. The connector **380** protrudes into the interior the receptacle housing **370** and has an aperture for receiving the pluggable connector **366** of the transceiver housing **312**. In the preferred embodiment, the connector **380** is a female connector for receiving the male connector **366**. However in an alternative embodiment, the pluggable connector **366** of the transceiver housing **312** may be a female connector and the connector **380** of the receptacle housing **370** would be a male connector. Protruding from the connector **380** are contacts **382** for direct connecting to a printed circuit board in a peripheral device such as a work station or computer to wire the connector **380**

directly to traces of a printed circuit board. In an alternative embodiment, a flat ribbon cable for transmitting the electrical signals protrudes from the transceiver module. The receptacle housing **370** includes in sides **374,375** aperture **384** for providing the locking of the transceiver within the receptacle housing **370**.

The transceiver housing **312** includes a pair of release levers **350,351**. The description of release lever **350** is the same of that for **351**. The release lever **350** includes a first end **353** which is attached to the side of the transceiver housing **312**. In a preferred embodiment, the release lever **350** is integrally molded with the transceiver housing **312**. The release lever **350** includes a second end **352** which includes a gripping portion **355** which has lined edges to assist in gripping of the release lever **350**. Intermediate to the first end **353** and the second end **352** is an intermediate portion **354**. The intermediate portion **354** angles outwardly away from the sides of the transceiver housing **312**. Attached at the end of the intermediate portion **354** is the second end **352** which is generally parallel to the side of the transceiver housing **312**. However, as the intermediate portion **354** angles outward and away from the side of the transceiver housing **312**, the second end **352** is at a distance from the sides of the transceiver housing **312** in its nonmated condition. Protruding from the intermediate portion **354** is detente **360**. The detente **360** includes an engagement surface **362**. Upon insertion of the transceiver housing **312** into the receptacle **370**, the intermediate portion **354** abuts against the side **374** of the receptacle housing **370** and causes the release lever **350** to compress inwardly toward the housing **312**. As the housing **312** is further inserted within the receptacle, the engaging portion **362** abuts against the sidewall **374** of the receptacle housing **370** causing the release lever **350** to compress further. Upon further insertion, the detente **360** engages aperture **384** of the receptacle housing **370** and the release lever **350** snaps outwardly to engage the aperture **384**. Upon snapping outwardly of the release lever **350**, the transceiver housing **312** is fully mated within the receptacle housing **370**. In this fully mated position, the pluggable connector **366** is fully mated with the connector **380** of the receptacle housing **370**.

For removal of the transceiver housing **312** from the receptacle housing **370**, the release levers **350,351** are grasped at the gripping portion **355** of the second end **352** in order to compress the levers inwardly toward the transceiver housing **312**. The compression of the release levers **350** releases the detente **360** from the aperture **384** of the receptacle housing **370**. Allowing the pluggable connector **366** of the transceiver housing **312** to be removed from the connector **380** of the receptacle housing and for the entire transceiver housing **312** to be removed from the receptacle **370**.

Turning to FIG. **11**, a top view of the alternative embodiment of the transceiver of the present invention is shown mated within a receptacle. The transceiver housing **312** is mated within receptacle housing **370**. The release levers **350,351** are compressed within the sidewalls **374,375** of the receptacle housing **370**. The detentes **360,361** of the release levers **350,351**, respectively, are seated within the apertures **384,385**. In the fully mated position, the pluggable connector **366** is mated with the connector **380** of the receptacle housing **370**. It can be seen that in order to release the transceiver housing **312** from the receptacle **370**, the gripping portions **355,356** of the release levers **350,351** are protruding from the receptacle housing **370** and may be grasped between two fingers and compressed together in order to release the detentes **360,361** from the apertures **384,385** and to then release the transceiver from the receptacle.

Still referring to FIG. **11**, transceiver connector **420'** is shown attached to the first end **316** of the transceiver module housing **312**. In this alternative embodiment, the transceiver connector **420'** may have an electrical connection and receive electrical plugs. As an alternative to the transceiver connector **320** shown in FIG. **10** which was described to receive fiber optic plugs, the transceiver connector **420'** of FIG. **11** may receive electrical plugs. For example, a copper wired electrical connector may be inserted in the transceiver connector **420** having a receptacle opening for receiving the electrical plug therein (see also FIG. **12**). In the alternative embodiment, the copper transceiver module housing **312** will not have optical subassemblies mounted therein. However, an electrical subassembly for the transceiver described above is still contained within the transceiver module, such as a transformer or other AC coupling means and differential (balanced) or single ended (unbalanced) transmission line drive and receive circuits. By providing a transceiver module **312** which supports different types of media in a common housing design, the transceiver module may be easily upgradable in the field. For example, an initial installation of an optical transceiver module (as shown in FIG. **12**) having multi-mode capabilities could provide transmission distances of approximately 500 meters. Should the system be reconfigured so that the required transmission distances decrease to 20 to 30 meters, the multimode optical transceiver could easily be replaced with a less costly copper transceiver (as shown in FIG. **11**) using the removable housing of the present invention. Such an operation can be easily accomplished by a technician in the field due to the easily disengageable latching means **350** and the pluggable connector **366** of the transceiver housing **312** and other features of the present invention discussed herein. Additionally, further upgrades may be accomplished in later reconfigurations that may require transmission distances of up to 10 kilometers by replacing the transceiver module with an optical transceiver module of the present invention having single-mode capabilities.

Referring to FIG. **12** a copper transceiver as discussed above is disclosed. The transceiver module housing **412** includes first end **416** and second end **418**. Running between the first and second end along the sides of the transceiver housing **412** are rails **471,472** for mounting to the guide rails of the receptacle assembly as disclosed in FIG. **14**. The second end **418** of the transceiver housing is inserted into a receptacle assembly, such as shown in FIGS. **14–17**, and pluggable connector **466** provides electrical connection to the receptacle assembly and a motherboard. The first end **416** includes a latch cover **490** to latch the transceiver housing **412** to the receptacle assembly, as discussed in more detail below. The latch cover **490** also includes latch member **496**. Mounted at the first end **416** are a pair of transceiver connectors **420**. In the embodiment of FIG. **12** the transceiver connectors are copper connectors for receiving electrical coaxial cable such as an SMA connector.

Turning to FIG. **13**, an enlarged perspective view of the second end **418** of the transceiver housing **412** is disclosed. The pluggable connector **466** or male ribbon style connector includes a D-shaped shroud **480** encircling an insulative substrate **460** such as a circuit board. The circuit board **460** protruding from the transceiver housing **412** has a first side **421**, an opposite second side **422**, and a distal end **440**. Extending perpendicularly from the second end **418** of the transceiver housing **412** is circuit board **460** having affixed on both the first side **421** and the second side **422** twenty electrical contacts **424**. Each electrical contact **424** consists of a strip of conductive material which is affixed to circuit

board **460** and is electrically connected to the circuitry mounted on the circuit board **460** within the transceiver module **412**. The first side **421** of the circuit board **460** includes ten electrical contacts **424** affixed thereto. As shown in FIG. **13** the electrical contacts are numbered **1** through **10**. The first and tenth contact adjacent the side edges of the circuit board **460** are ground contacts **425**. The ground contacts **425** extend out to the distal end **440** of the circuit board **460**. The remaining contacts, two through nine, are off-set from the distal end **440** of the circuit board **460**. This arrangement of the ground contacts **425** protruding further than the electrical contacts **424** allows for the hot plugging of the transceiver module **412** to a receptacle assembly which is already operational and powered up. The ground contacts **425** will make electrical contact with the receptacle assembly prior to the electrical contacts **424**, allowing the transceiver module to reach the ground potential of the receptacle assembly before the electrical contacts **424** are connected to the receptacle assembly. This arrangement provides a common ground in order to dissipate static discharge to ground potential prior in sequence to connection of other electrical contacts **424**. The second side **422** of the circuit board **460** may also have an arrangement similar to the first side **421** of the circuit board **460** in order to provide grounding for hot plugging.

Turning to FIG. **14**, a further alternative embodiment of the present invention is shown. In the further alternative embodiment, pluggable transceiver housings **511,512** provide for a pluggable transceiver. However, the pluggable transceiver housings **511,512** have an alternative embodiment to the release levers **350,351** as shown in FIGS. **10** and **11**. The transceiver housings **511,512** include a cover latch **590,590'** as an alternative means for latching the transceiver housings to a receptacle assembly **500**. FIG. **14** shows transceiver housing **512** partially mounted to a receptacle assembly **500**. Transceiver housing **511** is shown fully mated to the receptacle assembly **500**. The receptacle assembly **500** includes a motherboard or circuit card assembly **528**, a mounting panel **570** adjacent and perpendicular to a front side and attached to the motherboard **528**, mounting rails **571,572** and a circuit card connector **580** attached to connector bracket **582** which is mounted to the motherboard **528**. These elements of the receptacle assembly **500** may also define a housing of a device such as a host computer, server or PC. The elements described relating to the transceiver housing **512** are also included for the transceiver housing **511**, but will not be separately identified in order to avoid redundancy.

Transceiver housing **512** includes a first end **516** having a transceiver connector **520** attached thereto. In a preferred embodiment, the transceiver connector **520** receives optical plugs such as a duplex SC fiber optic connector. However, in an alternative embodiment, as discussed above, the transceiver connector **520** may provide an electrical connection by receiving an electrical plug having copper wires. However, in the case where the transceiver connector **520** receives fiber optic plugs, the receptacle openings **532,534** have mounted therein latches for receiving the fiber optic plug and adjacent thereto an optical subassembly mounted within the transceiver housing **512** (see FIG. **2**). The transceiver connector **520** is mounted to a transceiver housing frame **550**. In a preferred embodiment, the transceiver connector **520** and the transceiver frame **550** are integrally molded of a polymer material. The transceiver frame **550** may also form a potting box as discussed above. Mounted at a second end **518** of the transceiver housing **512** is a pluggable connector **566**. In a preferred embodiment, the connector **566** is a D-shaped connector as discussed above (FIG. **13**). The pluggable connector **566** being oriented at the second end **518**, opposite the first end **516** of the transceiver housing **512**, allows for the quick and easy insertion of the transceiver housing **512** into the receptacle assembly **500** and for pluggably mating the transceiver housing **512** to the circuit card connector **580** of the receptacle assembly **500** all in a single motion. The transceiver housing frame **550** is received by guide rails **571,572**. The guide rails **571,572** include detentes **573** for guiding the transceiver housing frame **550** and maintaining the transceiver housing **512** in a parallel orientation to the motherboard **528** and for aligning the pluggable connector **566** to the circuit card connector **580**.

Upon insertion of the transceiver housing **512** within the receptacle assembly **500**, approximately three quarters of the way, the latch cover **590** securedly mounts the transceiver housing **512** to the receptacle assembly **500**. The latch cover **590** includes a first side **591** and a second side **592**. The second side **592** of the latch cover **590** is hingedly attached to the first end **516** of the transceiver housing **512**. An attachment means **593** attaches the latch cover **590** so that it swings in a transverse direction to the first end **516** of the transceiver housing **512** in direction of arrow **599**. The second side **592** of the latch cover **590** also includes a boss **595**. Upon insertion of the transceiver housing **512** into the receptacle assembly **500** and initial rotation of the latch cover in direction of arrow **599**, the boss **595** will catch on the mounting panel opening **574**. The boss **595** engages the backside of the mounting panel **570** and pushes the transceiver housing **512** toward its completely mated orientation within the receptacle assembly **500**. As the latch cover **590** is rotated in direction of arrow **599**, it is moved into an orientation so that it is almost parallel with the front surface of the mounting panel so that latch member **596** engages the opening **574** of the mounting panel **570**. The latch member **596** is attached to resilient beam **597** attached to the first side **591** of the latch cover **590**. Upon engagement of the latch member **596** with the opening **574**, the resilient beam **597** is compressed toward the first end **591** of the latch cover **590**. The latch cover **590** is then moved to its fully latched position and the resilient beam **592** springs outwardly so that the latch member **596** engages the back of the mounting panel **570**. The latch member **596** may be released from its latched position by depressing the release lever **598** attached at the end of the resilient beam **597**. In a preferred embodiment, the latch cover **590**, latch member **596**, resilient beam **597** and release lever **598** are integrally molded of a polymer material.

In an embodiment of the transceiver housing **512**, the latch cover **590** may be metallized and the mounting panel **570** also metallized or made of a metallic material and grounded, so that attachment of the transceiver housing **511,512** to the mounting panel **570** via the metallized latch cover **590** automatically grounds the transceiver housings **511,512**.

Turning to the transceiver housing **511** shown fully mated with the receptacle assembly **500** in FIG. **14**, the latch cover **590'** is shown fully latched to the mounting panel **570** so that the front surface of the latch cover **590'** is parallel to the front plane of the mounting panel **570**. The latch cover **590'** includes window **594** from which the transceiver connector **520** protrudes. Upon fully mounting of the transceiver housing **511** within the receptacle assembly **500** and the complete latching of the cover latch **590'**, plugs may be inserted into the transceiver connector **520'**. In many circumstances, the transceiver housing **511** can remain

within the receptacle assembly **500** for a long period of time and in some cases, the transceiver housing **511** may never need to be replaced or removed. However, in certain circumstances, the transceiver housing **511** may need updating or repair. The present design allows for the easy removal and reinsertion of the transceiver housing **511**. For example, the transceiver housing **511** may need to be modified so that a different media interface transceiver connector **520'** may be utilized and added to the housing. Or in another instance, the functioning of the transceiver module may need to be updated by adding a new chip set or optoelectronic subassembly. By depressing the release lever **598'** the latch cover **590'** may be unlatched and rotated to an "open" position. Once the latch cover **590'** is "open," the latch cover **590** may be gripped and used as a handle to aid in pulling the transceiver housing **511** from the receptacle assembly **500**. Once removed, the transceiver module housing **511** may then be repaired, replaced or updated.

Turning to FIGS. **15–16**, a further alternative embodiment of the present invention is shown. Generally, FIGS. **15–16** show a new and improved receptacle for receiving a transceiver module, such as those described herein. For example, the receptacle **310** disclosed in FIG. **10** is more clearly illustrated by reference to FIGS. **15–16**. Similarly, the receptacle shown in FIGS. **15–16** is configured to receive the transceiver housing **312** shown in FIGS. **10–11**. A receptacle assembly **600** is shown in FIG. **15** having a motherboard **628** and a mounting panel **670** having mounted thereto a transceiver receptacle **610**. The receptacle **610** has a first end **616** having an opening **676** and a second end **618** having a connector **680** adjacent thereto. The transceiver receptacle **610** also includes top **672** and sides **674,675**.

The walls of the receptacle **610** define a chamber **620**. FIG. **15** is partially cut-away to expose the chamber **620** within the receptacle **610**. Mounted within the chamber **620** are ground surfaces or tabs **691,692**. The ground tabs **691,692** protrude into the chamber **620** and are oriented to abuttingly engage or wipe against the external surfaces of a transceiver module mounted within the receptacle **610**. The outer surfaces of a transceiver housing are metallized so that upon insertion within the chamber **620** and engagement with the ground tabs **691,692**, the transceiver module will be grounded. The ground tabs **691,692** include ground posts **693,694**. The ground posts **693,694** are mounted in and grounded to the motherboard **628**. The ground tabs **691,692** are joined by brace **695**. The ground tabs **691,692** are attached to the brace **695** via arms **696,697**. The arms **696,697** and the brace **695** in a preferred embodiment are insert molded within the receptacle housing **610**. The insert molding is controlled so that only the ground tabs **691,692** protrude into the chamber **620** and the ground posts **693,694** protrude out from the bottom of the receptacle **610**.

The receptacle connector **680** includes contacts **682** which are attached to the motherboard **628**. Protruding into the chamber **620** from the connector **680** is receptacle connector **681** for receiving the D-shaped connector at the end of the transceiver module inserted within the receptacle **610**. (See FIG. **10**.)

Turning to FIG. **16**, a side elevation cut-away view of FIG. **15** taken at line **16—16** is shown. The receptacle housing **610** is shown mounted to the motherboard **628** and the mounting panel **670**. Ground clip **692** protrudes into the chamber **620** and grounds the metallized transceiver housing to the motherboard **628**. The ground tab **692** is attached to arm **697**. Protruding from the arm **697** is ground post **694** which is mounted within the plated through hole of motherboard **628** and is secured to the motherboard with solder **629** and provides for grounding to the motherboard. At least a portion of the arm **697** and a portion of the ground post **694** and brace **695** are molded within the polymer material of the receptacle housing **610**. Receptacle connector **680** is attached at the second end **618** of the receptacle **610**. Attached to the receptacle connector **680** is D-shaped receptacle **681** and contacts **682**.

Turning to FIG. **17** an alternative embodiment is provided where the receptacle assembly **700** includes a circuit card assembly or mother board **728**, a mounting panel **770**, mounting rails **771,772** and a circuit card connector **780** attached to a connector bracket **782**. Mounted to the mounting panel **770** is a protective door **750**. The mounting panel **770** is partially broken away to more clearly show the door **750**. The door **750** is hinged at a point at the top of the door **750**. Post **751** protrudes from the edge of the door and is received by an aperture in the mounting panel **770**. Mounted on the post **751** is a resilient member **752** such as a spring. The spring **752** is configured in order to return the door **750** to its closed position parallel to the front face of the mounting panel **770** after the door **750** has been opened. The protective door **750** acts as a shield in order to limit electromagnetic radiation from escaping from the receptacle assembly **700** when the receptacle assembly **700** is empty. Certain power sources and components mounted to the motherboard **728** may develop electromagnetic emissions. In absence of a door such as **750** upon removal of a transceiver module from the receptacle assembly **700**, the electromagnetic emissions generated by the components mounted on the motherboard **728** would be free to escape through the opening **776**. Attachment of the protective door **750** to the mounting panel inhibits these emissions. The protective door **750** may be metal or metallized in order to further reduce such emissions. Also by incorporation of door **750** to the receptacle assembly **700** the receptacle may be left empty upon initial construction of the receptacle assembly **700**, allowing for assembly of multiple receptacle assemblies **700** on motherboard **728** for reception of additional transceiver modules at a later date. The post **751** provides for a hinge to the door **750** and allows for the swinging motion of the door. The door **750** is hinged so that upon abutment of a transceiver module against the door and attempted insertion of the transceiver module through opening **776**, the door will swing inwardly allowing the transceiver module to be inserted therein. While the transceiver module is housed within the receptacle assembly **700** the door **750** will remain in an upright position adjacent the top of the transceiver module. Upon removal of the transceiver module from the receptacle assembly **700**, the spring **752** causes the door **750** to swing back to its closed position parallel to the front face of the mounting panel **770**.

Turning to FIG. **18**, another alternative embodiment of the present invention is shown. Attached to the transceiver housing **811** is a transceiver connector **820** which is an alternative embodiment of the transceiver connector **520** of transceiver housing **512** of FIG. **14**. The transceiver connector **820** is shown having a modular port **821**. The modular port **821** is configured so that any number of receptacle connectors may be inserted therein for receiving various types of plugs. Due to the easily removable nature of the transceiver module **811**, the transceiver can be removed so that a plug receptacle (not shown) mounted within the modular port **821** may be removed and disconnected from the components within the transceiver module **811** and a new plug receptacle inserted within the modular port **821** and connected to the components of the transceiver module **811**. Such an operation is best accomplished by the manu-

facturer using this orientation to achieve quick assembly and just-in-time manufacture and to avoid remolding of the entire module housing. The transceiver module **811** can then be easily reinserted and attached to the receptacle assembly **800**. For example, the transceiver module **811** may be configured for transmitting and receiving electrical signals from an external device having an electrical plug inserted into the transceiver connector **820**, as discussed above. Such a copper plug would be inserted into a copper plug receptacle which is mounted within the modular port **821**. For example, a DB-9 connector may be used. In another embodiment, an alternative fiber optic receptacle could be inserted within the modular port **821**. For example, a multiple channel connector such as an MT connector could be attached to the transceiver housing **811** by inserting an updated optical fiber receptacle within the modular port **821** of the transceiver connector **820** to receive a multi-channel connector.

In another embodiment, a media transducer may be inserted within modular port **821**. The media transducer may include at a first end a connector receptacle such as coaxial connector **420** of FIG. **12** or an SC duplex connector **520** of FIG. **12**. A second end of the media transducer may include an optoelectronic subassembly such as a PIN diode, laser diode such as LED and other optical circuitry for optical media; or an electrical subassembly such as a transformer or other AC coupling means for copper media. In another embodiment, the media transducer may include only a connector receptacle or only an optoelectronic or electronic subassembly. Such a media transducer would allow for the updating or changing of the media interface by removing the media transducer from the modular port **820** and replacing with another media transducer.

It should be understood that in describing the top and bottom portions of the transceiver module and its respective potting box components, the terms "top" and "bottom" are used by way of example only due to the orientation of the drawings. It should also be understood that various changes and modifications to the presently preferred embodiments described herein will be apparent to those skilled in the art. Furthermore, although the transceiver module depicted in the presently preferred embodiment has its male ribbon style connector extending from the bottom, it should be understood from the outset that the connector can be configured to extend, for example, from the second end of the transceiver. Therefore, changes and modifications may be made without departing from the spirit and scope of the present invention and without diminishing its attendant advantages. Thus, it is intended that such changes and modifications be covered by the appended claims.

We claim:

1. A removable optoelectronic transceiver module and receptacle assembly comprising:

a transceiver module housing having a first end, a second end and an electrically conductive outside surface;

a circuit board mounted within the housing and an optical subassembly electrically connected to the circuit board adjacent said first end;

a fiber optic SC duplex receptacle at the first end;

a pair of latch levers attached adjacent the first end and a pluggable male ribbon style electrical connector at the second end connected to said circuit board and protruding from said housing for quickly installing and replacing said module to or from a circuit card assembly and the male ribbon style connector having at least a pair of metallic fingers extending from said housing on opposed sides of an insulator;

a receptacle housing including a first end having a metallic conductive door mounted at the first end for receiving the module therethrough and opposed thereto a second end, the second end including a circuit card connector having signal contacts mating with the male ribbon style connector of the module, wherein upon mating of the ribbon style connector of the module with the circuit card connector of the receptacle a majority of the module is received within the receptacle; and

a ground tab provided by the receptacle for contacting the electrically conductive outside surface of the transceiver module in order to reduce electromagnetic interference and to provide for an FCC compliant module.

2. The transceiver module and receptacle assembly of claim **1** wherein the ground tab is attached to an arm which is molded within the receptacle housing.

3. The module and receptacle assembly of claim **1** wherein the door is hinged adjacent the top surface of the receptacle housing wherein upon insertion of the module within the receptacle the door is opened and provides an effective open aperture at the first end of the receptacle and the electrically conductive outside surface of the module includes a portion of the first end of the module for reducing the effective open aperture when the first end is mounted within the open aperture wherein the electrically conductive portion is electrically connected to the ground tab of the receptacle in order to reduce electromagnetic interference and to provide for an FCC compliant module.

4. The transceiver module and receptacle assembly of claim **1** including:

the ground tab mounted at the second end of the transceiver receptacle in order to provide grounding of the transceiver module to the receptacle.

5. The transceiver module and receptacle assembly of claim **1** wherein the transceiver module includes an external surface that is metallized and upon insertion within the receptacle, the metallized transceiver module housing abuts against the ground tab protruding within the receptacle chamber in order to ground the transceiver module to the receptacle in order to provide for the harmless dissipation of static charge.

6. The transceiver module and receptacle assembly of claim **1** wherein the pair of latch levers are attached to the sides of the transceiver module housing and latching to the interior surface of the receptacle.

7. The transceiver module and receptacle assembly of claim **1** including a metallic SC duplex receptacle assembly at the first end of the transceiver module housing.

8. The transceiver module and receptacle assembly of claim **7** wherein the transceiver connector is a fiber optic plug receptacle.

9. A transceiver module and receptacle assembly of claim **1** wherein a circuit card connector is provided which includes contacts arranged to allow for hot plugging and dissipation of static charge.

10. An optoelectronic transceiver receptacle comprising:

a transceiver receptacle located on a circuit card of a communication system chassis and the communication system having components that generate and use timing signals or pulses at a rate in excess of 9,000 cycles per second, and the receptacle including

a first end having a protective door mounted thereto, the protective door formed of a conductive material and providing EMI shielding from radiating components on the circuit card in order to provide an FCC compliant communication system; and

a first grounding means including a ground tab extending into the receptacle and mounted at second end of the receptacle;

an electrical receptacle connector mounted at the second end of the receptacle; and

the receptacle connector having a second grounding means, the receptacle connector for receiving a connector of a removable optoelectronic transceiver module and a majority of the module is received within the receptacle and wherein the module is grounded upon insertion within the receptacle via a ground contact finger offset from a signal contact finger so that the ground contact finger mates with a corresponding ground contact finger prior to the mating of the signal contact finger with a corresponding signal contact finger wherein the first grounding means and the second grounding means provide for the harmless dissipation of static charge and provides for the proper sequencing of power connections to facilitate hot plugging of the optoelectronic transceiver module.

11. The transceiver receptacle of claim **10** wherein the receptacle housing includes the receptacle connector having the ground tab for grounding a pluggable connector of a transceiver module.

12. The transceiver receptacle of claim **10** wherein the grounding means includes a ground surface protruding within the receptacle.

13. The transceiver receptacle of claim **12** wherein the ground surface is attached to an arm which is molded within the receptacle house.

14. The transceiver receptacle of claim **10** wherein the receptacle has mounted therein a guide rail for receiving a transceiver module.

15. The transceiver receptacle of claim **14** wherein the guide rail includes a detente for guiding the transceiver module along the guide rail.

16. The transceiver receptacle of claim **10** wherein the receptacle includes a mounting panel at the first end;

the electrical receptacle connector opposed to the mounting panel at a second end;

the receptacle being defined by the area between the first end and the second end; and

a guide rail mounted in the receptacle between the first end and the second end wherein the guide rail guides a transceiver module through the receptacle to align the male ribbon style connector of the transceiver module with the electrical receptacle connector.

17. The transceiver receptacle of claim **16** wherein the electrical receptacle connector is a circuit card connector mounted to the circuit card that is mounted transverse to the mounting panel.

18. The transceiver receptacle of claim **14** wherein a pair of guide rails are mounted on the circuit card.

19. The transceiver receptacle of claim **10** wherein the guide rail receives a frame member of a transceiver module housing.

20. A removable optoelectronic transceiver module comprising:

a transceiver module housing having a first end and a second end;

a latching means attached adjacent the first end;

a pluggable electrical connector at the second end having a shroud, the pluggable connector for mounting the module within a chassis; and

a first ground member located outside of the shroud including a metallic surface adjacent the pluggable connector providing for a first electrical connection to a receptacle;

a second ground member surrounded by the shroud, isolated from the first ground member, the second ground member adjacent module signal contacts and providing a second electrical connection between the second ground member and a ground contact of the receptacle, both of said first and second electrical connections occurring prior to the electrical connection of at least some of the adjacent module signal contacts wherein the first and second ground members provide for the harmless dissipation of static charge; and

the receptacle including a first end having a conductive door mounted thereto providing EMI shielding from radiative components within the chassis and upon mating of the pluggable connector through the conductive door and within the receptacle a majority of the module is received within the receptacle and the first and second ground members contact the receptacle in order to reduce electromagnetic interference and provide for an FCC compliant module.

21. The transceiver module of claim **20** including:

a transceiver connector at the first end.

22. The transceiver module of claim **20** wherein the transceiver connector includes a modular port for receiving a media transducer.

23. The transceiver module of claim **21** wherein the pluggable connector includes a D-shaped shroud surrounding a circuit board protruding transversely from the second end and having electrical contacts attached thereto.

24. The transceiver module of claim **20** wherein the second ground member includes the pluggable connector having ground contacts connected to the signal ground and the ground contacts are offset from adjacent electrical contacts.

25. The transceiver module of claim **20** wherein the first ground member makes contact with a ground tab of the receptacle before signal contacts, in order to ground the module to the circuit ground and provide for static discharge.

26. The transceiver module of claim **20** wherein the contacts of the pluggable connector are arranged to allow the hot plugging.

27. A removable transceiver module comprising:

a housing including a first end;

a circuit board mounted within said housing and an electronic circuit connected to said circuit board adjacent said first end;

a plug receptacle at the first end;

an electrically conductive surface;

a male ribbon style electrical connector at a second end of said housing connected to said circuit board and protruding from said housing for quickly installing and replacing said module to or from a receptacle mounted to a circuit card assembly and the male ribbon style connector including an insulating beam extending from said housing and having metallic fingers on each side of the beam to provide for hot plugging of the module wherein the ground contact is mated before the signal contact when the male ribbon style connector is mated within the receptacle and

the receptacle including a conductive door providing for EMI shielding of conductive components on the circuit card assembly and when a majority of the module is received within the receptacle the electrically conductive surface is conductivity coupled to a chassis of the circuit card assembly in order to provide a reduction of electromagnetic emissions from the module and to provide an FCC compliant circuit card assembly.

28. The optoelectronic module of claim **27** wherein ground contact protrudes beyond the signal contact, wherein the ground contact will make contact with a connector of a receptacle before the signal contacts.

29. The optoelectronic module of claim **28** wherein the ground contact provides for static discharge.

30. The optoelectronic module of claim **28** wherein the ground contact establishes a reference voltage.

31. The optoelectronic module of claim **27** wherein the electrical connector protrudes perpendicularly from an end face of the second end and parallel to the circuit board.

32. The optoelectronic module of claim **27** wherein the pair of metallic fingers extend from said housing on opposed sides of an insulator.

33. The optoelectronic module of claim **27** wherein said housing includes a mounting member for facilitating the insertion and removal of said module to and from a circuit card assembly.

34. The removable optoelectronic module of claim **27** wherein the circuit card assembly includes a circuit card connector for receiving the male ribbon style electrical connector of the module, the circuit card connector having circuit card ground contacts offset from circuit card signal contacts so that the ground contact of the male ribbon style connector is mated with the circuit card ground contacts before the signal contact of the male ribbon style connector is mated with the circuit card signal contacts.

35. The electrical connector of claim **27** wherein the circuit board protrudes from the second end forming the male ribbon connector and having the metallic fingers formed of a conductive material affixed to the circuit board.

36. The electrical connector of claim **27** wherein a shroud protrudes from the second end of the housing surrounding the distal end of the circuit board.

37. The electrical connector of claim **27** wherein the circuit board includes a circuitry mounted thereon which is connected to a plurality of contacts.

38. The electrical connector of claim **27** wherein the housing includes a D-shaped shroud protruding from the second end.

39. An optoelectronic transceiver module and receptacle assembly for receiving a removable optoelectronic transceiver module, the assembly comprising:

the optoelectronic transceiver module including an electrically conductive outside surface;

a transceiver receptacle located on a circuit card of a communication system chassis for receiving a majority of the module therein and the receptacle including

a first end having a protective door mounted thereto, the protective door formed of a conductive material and providing EMI shielding from radiating components on the circuit card in order to provide an FCC compliant communication system; and

a grounding tab within the receptacle and the receptacle includes at a second end an electrical receptacle connector for receiving a connector of the removable optoelectronic transceiver module wherein the grounding tab, the protective door or the electrically conductive outside surface of the module provide a reduction of electromagnetic emissions from within the communication system chassis whether or not the module is inserted within the receptacle.

40. A transceiver receptacle comprising:

a transceiver receptacle located on a circuit card of a communication system chassis and the receptacle including

a first end having a protective door mounted thereto, the protective door formed of a conductive material and providing EMI shielding from radiating components on the circuit card; and

a grounding tab provided by the receptacle for abutting against an electrically conductive surface of a removable transceiver module and the receptacle includes at a second end an electrical receptacle connector for receiving a connector of the removable transceiver module wherein upon mating of the receptacle connector with the removable transceiver module connector a majority of the removable transceiver module is received within the receptacle and the grounding tab, the protective door or the electrically conductive surface provide a reduction of electromagnetic emissions from within the communication system chassis whether or not the removable transceiver module is inserted within the receptacle.

41. The transceiver receptacle of claim **40** wherein the removable transceiver module includes a transceiver connector having an electrical plug receptacle.

42. The transceiver receptacle of claim **40** wherein the removable transceiver module includes a media transducer having an electrical plug receptacle and an electrical subassembly.

43. The transceiver receptacle of claim **40** wherein the protective door provides for shielding and not for static discharge purposes.

44. The transceiver receptacle of claim **40** wherein the grounding tab abuts against an electrically conductive outer surface of the module in order to ground the module and reduce electromagnetic interference and provide for an FCC compliant module.

* * * * *