AO 120 (Rev. 08/10)

| TO: | Mail Stop 8<br>Director of the U.S. Patent and Trademark Office<br>P.O. Box 1450<br>Alexandria, VA 22313-1450 | REPORT ON THE FILING OR DETERMINATION OF AN ACTION REGARDING A PATENT OR TRADEMARK |
|---|---|---|

In Compliance with 35 U.S.C. § 290 and/or 15 U.S.C. § 1116 you are hereby advised that a court action has been filed in the U.S. District Court Eastern District of Texas on the following

☐ Trademarks or ☑ Patents. ( ☐ the patent action involves 35 U.S.C. § 292.):

| DOCKET NO. | DATE FILED | U.S. DISTRICT COURT |
|---|---|---|
| 2:22-cv-00309 | 8/9/2022 | Eastern District of Texas |

| PLAINTIFF | DEFENDANT |
|---|---|
| NEXTGEN INNOVATIONS, LLC | NOKIA OF AMERICA CORPORATION, ET AL. |

| | PATENT OR TRADEMARK NO. | DATE OF PATENT OR TRADEMARK | HOLDER OF PATENT OR TRADEMARK |
|---|---|---|---|
| 1 | 8,238,754 | 8/7/2012 | NextGen Innovations, LLC |
| 2 | 9,887,795 | 2/6/2018 | NextGen Innovations, LLC |
| 3 | 10,263,723 | 4/16/2019 | NextGen Innovations, LLC |
| 4 | 10,771,181 | 9/8/2020 | NextGen Innovations, LLC |
| 5 | | | |

In the above—entitled case, the following patent(s)/ trademark(s) have been included:

| DATE INCLUDED | INCLUDED BY ☐ Amendment ☐ Answer ☐ Cross Bill ☐ Other Pleading | |
|---|---|---|
| PATENT OR TRADEMARK NO. | DATE OF PATENT OR TRADEMARK | HOLDER OF PATENT OR TRADEMARK |
| 1 | | |
| 2 | | |
| 3 | | |
| 4 | | |
| 5 | | |

In the above—entitled case, the following decision has been rendered or judgement issued:

| DECISION/JUDGEMENT |
|---|
| |

| CLERK | (BY) DEPUTY CLERK | DATE |
|---|---|---|
| | | |

**Copy 1—Upon initiation of action, mail this copy to Director** **Copy 3—Upon termination of action, mail this copy to Director**
**Copy 2—Upon filing document adding patent(s), mail this copy to Director** **Copy 4—Case file copy**

Print Save As... Reset

AO 120 (Rev. 08/10)

| TO: | Mail Stop 8<br>Director of the U.S. Patent and Trademark Office<br>P.O. Box 1450<br>Alexandria, VA 22313-1450 | REPORT ON THE<br>FILING OR DETERMINATION OF AN<br>ACTION REGARDING A PATENT OR<br>TRADEMARK |
|---|---|---|

In Compliance with 35 U.S.C. § 290 and/or 15 U.S.C. § 1116 you are hereby advised that a court action has been filed in the U.S. District Court Eastern District of Texas on the following

☐ Trademarks or ☑ Patents. ( ☐ the patent action involves 35 U.S.C. § 292.):

| DOCKET NO. | DATE FILED | U.S. DISTRICT COURT |
|---|---|---|
| 2:22-cv-00308 | 8/9/2022 | Eastern District of Texas |

| PLAINTIFF | DEFENDANT |
|---|---|
| NEXTGEN INNOVATIONS, LLC | AT&T SERVICES, INC. AND AT&T CORP. |

| | PATENT OR TRADEMARK NO. | DATE OF PATENT OR TRADEMARK | HOLDER OF PATENT OR TRADEMARK |
|---|---|---|---|
| 1 | 9,887,795 | 2/6/2018 | NextGen Innovations, LLC |
| 2 | 10,263,723 | 4/16/2019 | NextGen Innovations, LLC |
| 3 | 10,771,181 | 9/8/2020 | NextGen Innovations, LLC |
| 4 | 8,374,508 | 2/2/2013 | NextGen Innovations, LLC |
| 5 | | | |

In the above—entitled case, the following patent(s)/ trademark(s) have been included:

| DATE INCLUDED | INCLUDED BY ☐ Amendment ☐ Answer ☐ Cross Bill ☐ Other Pleading | |
|---|---|---|
| PATENT OR TRADEMARK NO. | DATE OF PATENT OR TRADEMARK | HOLDER OF PATENT OR TRADEMARK |
| 1 | | |
| 2 | | |
| 3 | | |
| 4 | | |
| 5 | | |

In the above—entitled case, the following decision has been rendered or judgement issued:

| DECISION/JUDGEMENT |
|---|
| |

| CLERK | (BY) DEPUTY CLERK | DATE |
|---|---|---|
| | | |

**Copy 1—Upon initiation of action, mail this copy to Director** **Copy 3—Upon termination of action, mail this copy to Director**
**Copy 2—Upon filing document adding patent(s), mail this copy to Director** **Copy 4—Case file copy**

**Ex. 1024.2**

Print Save As... Reset

AO 120 (Rev. 08/10)

| TO: | Mail Stop 8<br>Director of the U.S. Patent and Trademark Office<br>P.O. Box 1450<br>Alexandria, VA 22313-1450 | REPORT ON THE FILING OR DETERMINATION OF AN ACTION REGARDING A PATENT OR TRADEMARK |
|---|---|---|

In Compliance with 35 U.S.C. § 290 and/or 15 U.S.C. § 1116 you are hereby advised that a court action has been filed in the U.S. District Court Eastern District of Texas on the following

☐ Trademarks or ☑ Patents. ( ☐ the patent action involves 35 U.S.C. § 292.):

| DOCKET NO. | DATE FILED | U.S. DISTRICT COURT |
|---|---|---|
| 2:22-cv-00307 | 8/9/2022 | Eastern District of Texas |

| PLAINTIFF | DEFENDANT |
|---|---|
| NEXTGEN INNOVATIONS, LLC | FUJITSU NETWORK COMMUNICATIONS, INC., ET AL. |

| | PATENT OR TRADEMARK NO. | DATE OF PATENT OR TRADEMARK | HOLDER OF PATENT OR TRADEMARK |
|---|---|---|---|
| 1 | 8,238,754 | 8/7/2012 | NextGen Innovations, LLC |
| 2 | 9,887,795 | 2/6/2018 | NextGen Innovations, LLC |
| 3 | 10,263,723 | 4/16/2019 | NextGen Innovations, LLC |
| 4 | 10,771,181 | 9/8/2020 | NextGen Innovations, LLC |
| 5 | | | |

In the above—entitled case, the following patent(s)/ trademark(s) have been included:

| DATE INCLUDED | INCLUDED BY ☐ Amendment ☐ Answer ☐ Cross Bill ☐ Other Pleading | |
|---|---|---|
| PATENT OR TRADEMARK NO. | DATE OF PATENT OR TRADEMARK | HOLDER OF PATENT OR TRADEMARK |
| 1 | | |
| 2 | | |
| 3 | | |
| 4 | | |
| 5 | | |

In the above—entitled case, the following decision has been rendered or judgement issued:

| DECISION/JUDGEMENT |
|---|
| |

| CLERK | (BY) DEPUTY CLERK | DATE |
|---|---|---|
| | | |

**Copy 1—Upon initiation of action, mail this copy to Director** **Copy 3—Upon termination of action, mail this copy to Director**
**Copy 2—Upon filing document adding patent(s), mail this copy to Director** **Copy 4—Case file copy**

**Ex. 1024.3**

Print Save As... Reset

AO 120 (Rev. 08/10)

| TO: | Mail Stop 8<br>Director of the U.S. Patent and Trademark Office<br>P.O. Box 1450<br>Alexandria, VA 22313-1450 | REPORT ON THE FILING OR DETERMINATION OF AN ACTION REGARDING A PATENT OR TRADEMARK |
|---|---|---|

In Compliance with 35 U.S.C. § 290 and/or 15 U.S.C. § 1116 you are hereby advised that a court action has been filed in the U.S. District Court Eastern District of Texas on the following

☐ Trademarks or ☑ Patents. ( ☐ the patent action involves 35 U.S.C. § 292.):

| DOCKET NO. | DATE FILED | U.S. DISTRICT COURT |
|---|---|---|
| 2:22-cv-00306 | 8/9/2022 | Eastern District of Texas |

| PLAINTIFF | DEFENDANT |
|---|---|
| NEXTGEN INNOVATIONS, LLC | INFINERA CORPORATION |

| | PATENT OR TRADEMARK NO. | DATE OF PATENT OR TRADEMARK | HOLDER OF PATENT OR TRADEMARK |
|---|---|---|---|
| 1 | 9,887,795 | 2/6/2018 | NextGen Innovations, LLC |
| 2 | 10,263,723 | 4/16/2019 | NextGen Innovations, LLC |
| 3 | 10,771,181 | 9/8/2020 | NextGen Innovations, LLC |
| 4 | | | |
| 5 | | | |

In the above—entitled case, the following patent(s)/ trademark(s) have been included:

| DATE INCLUDED | INCLUDED BY ☐ Amendment ☐ Answer ☐ Cross Bill ☐ Other Pleading | |
|---|---|---|
| PATENT OR TRADEMARK NO. | DATE OF PATENT OR TRADEMARK | HOLDER OF PATENT OR TRADEMARK |
| 1 | | |
| 2 | | |
| 3 | | |
| 4 | | |
| 5 | | |

In the above—entitled case, the following decision has been rendered or judgement issued:

| DECISION/JUDGEMENT |
|---|
| |

| CLERK | (BY) DEPUTY CLERK | DATE |
|---|---|---|
| | | |

**Copy 1—Upon initiation of action, mail this copy to Director** **Copy 3—Upon termination of action, mail this copy to Director**
**Copy 2—Upon filing document adding patent(s), mail this copy to Director** **Copy 4—Case file copy**

**Ex. 1024.4**

Print Save As... Reset

Trials@uspto.gov
571-272-7822

Paper 10
Date: February 15, 2022

UNITED STATES PATENT AND TRADEMARK OFFICE

---

BEFORE THE PATENT TRIAL AND APPEAL BOARD

---

II-VI, Inc.,
Petitioner,

v.

NextGen Innovations, LLC,
Patent Owner.

---

IPR2021-01358
Patent 9,887,795

---

Before PATRICK M. BOUCHER, GARTH D. BAER, and KARA L. SZPONDOWSKI, *Administrative Patent Judges.*

SZPONDOWSKI, *Administrative Patent Judge.*

DECISION
Denying Institution of *Inter Partes* Review
*35 U.S.C. § 314*

## I. INTRODUCTION

II-VI, Inc. ("Petitioner") filed a Petition (Paper 1, "Pet.") to institute an *inter partes* review of claims 1–21 of U.S. Patent 9,887,795 B2, issued on February 6, 2018 (Ex. 1001, "the '796 patent"). NextGen Innovations, LLC

("Patent Owner") filed a Preliminary Response (Paper 9, "Prelim. Resp."). We have jurisdiction under 35 U.S.C. § 314.

Institution of an *inter partes* review is authorized when "the information presented in the petition . . . and any response . . . shows that there is a reasonable likelihood that the petitioner would prevail with respect to at least 1 of the claims challenged in the petition." 35 U.S.C. § 314(a). Under Section 325(d), however, the Director, and by delegation the Board, has discretion to deny review, even where a petitioner meets the threshold showing necessary to support institution, if "the same or substantially the same prior art or arguments previously were presented to the Office." 35 U.S.C. § 325(d).

For reasons that follow, we exercise our discretion and decline to institute an *inter partes* review of the '795 patent.

## II. BACKGROUND

### *A. Real Parties in Interest*

Petitioner identifies II-VI Incorporated and Finisar Corporation as real parties in interest. Pet. v. Patent Owner identifies Alexander Soto, Walter Soto, and NextGen Innovations, LLC as real parties in interest. Prelim. Resp. ix.

### *B. Related Matters*

The parties advise that the '795 patent is the subject of the following district court litigation: *NextGen Innovations, LLC v. II-VI, Inc. et al*, 5:21-CV-07477 (N.D. Cal.). Pet. vi; Prelim. Resp. ix.

Petitioner concurrently filed IPR2021-01359 involving U.S. Patent No. 10,263,723, ("the '723 patent") and IPR2021-01361 involving U.S. Patent No. 10,771,181 ("the '181 patent). Pet. vi.; Prelim. Resp. x. Patent

Owner also identifies U.S. Patent Application No. 17/013,635, currently pending before the U.S. Patent and Trademark Office. Prelim. Resp. x.

*C. Evidence*

Petitioner relies on the following references (*see* Pet. 14).

| Reference | Exhibit | Patent/Printed Publication |
|---|---|---|
| Raghavan | 1005 | Raghavan et al., US 2003/0112896 A1, published June 19, 2003 |
| Richard | 1012 | Richard et al., US 2003/0118273 A1, published June 26, 2003 |
| Agazzi | 1004 | Agazzi et al., US 2002/0012152 A1, published Jan. 31, 2002 |
| Brede | 1006 | Brede et al., US 6,603,822 B2, issued Aug. 5, 2003 |
| Halgren | 1019 | Halgren et al., US 2004/0052528 A1, published Mar. 18, 2004 |
| Feher | 1024 | Feher, US 6,757,334 B1, issued June 29, 2004 |
| Gertel | 1015 | Gertel, US 5,424,863, issued June 13, 1995 |

*D. Prior Art and Asserted Grounds*

Petitioner asserts that claims 1–21 are unpatentable on the following grounds (Pet. 14–15):

| Claims Challenged | 35 U.S.C. § | References |
|---|---|---|
| 1–7, 10, 13–21 | 103 | Raghavan, Richard |
| 1–5, 10, 13–19, 21 | 103 | Agazzi, Richard |
| 1–3, 5, 13–16, 18, 20, 21 | 103 | Brede, Halgren |
| 8, 9 | 103 | Raghavan, Richard, Feher |
| 8, 9 | 103 | Agazzi, Richard, Feher |
| 8, 9 | 103 | Brede, Halgren, Feher |
| 11, 12 | 103 | Raghavan, Richard, Gertel |
| 11, 12 | 103 | Agazzi, Richard, Gertel |
| 11, 12 | 103 | Brede, Halgren, Gertel |

In support of its proposed grounds, Petitioner relies on the Declaration of Jack Winters Ph.D. *See* Ex. 1002.

*E. The '795 Patent (Ex. 1001)*

*1. Overview*

The '795 patent is titled "System and Method for Performing High-Speed Communications Over Fiber Optical Networks" and is directed to "optical fiber communications generally, and more specifically to m-ary modulation in optical communication networks." Ex. 1001, code (54), 1:26–28.

The '795 patent describes several embodiments of optical transceiver modules. Ex. 1001, 8:65–11:11. One such embodiment is illustrated in Figure 3 of the '795 patent, which is reproduced below.

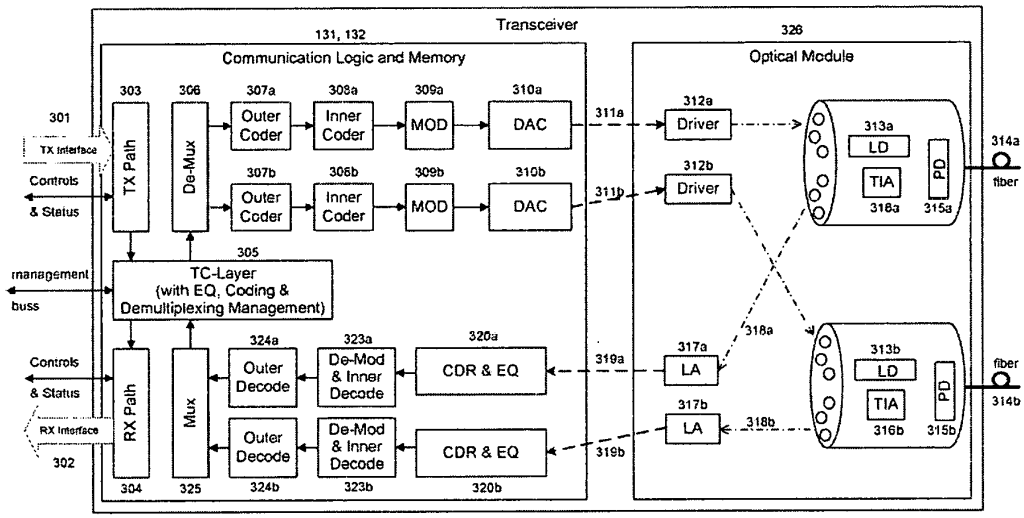


FIG. 3

Figure 3 shows a system block diagram for an implementation of a transceiver with components for transmit-side processing generally in the upper half of the diagram and components for receive-side processing generally in the lower half. *Id.* at 8:65–66, 9:9–13. On the transmit side,

signals are received from transmit ("TX") interface 301 and prepared for data transmission by TX path block 303 and transmission convergence layer or media access control ("TC-Layer/MAC") block 305. *Id.* at 9:9–36. Optionally, DeMux block 306 may split the transmitting data into a plurality of paths (two of which are shown in Figure 3), for demultiplexing data across multiple fibers. *Id.* at 9:36–47.

In a transmit path, transmit data may be provided to outer and inner coder blocks 307, 308 to perform error-correction coding, Reed-Solomon coding, trellis coding, and the like, as appropriate to the application. *Id.* at 9:52–61. Modulation block 309 performs any of a variety of m-ary modulation methods to increase the number of bits per symbol transmitted. *Id.* at 10:11–22. Digital-to-analog converter ("DAC") 310 converts the m-ary modulated signal to an analog signal that is processed by laser driver 312, which drives an optical transmitter such as laser diode 313 to transmit an optical signal over fiber 314. *Id.* at 10:27–37.

The receive side of the transceiver includes components that generally implement inverse functions of the transmit side. *See id.* at 10:38–11:11. Photodiode ("PD") 315 detects a received optical signal and converts it to an electrical signal that is amplified by transimpedance amplifier ("TIA") 316 and linear amplifier ("LA") 317, which may also perform signal conditioning. *Id.* at 10:38–51. The electrical signal is processed by clock data recovery ("CDR") and equalization ("EQ") block 320 to recover clock and data signals. *Id.* at 10:51–56. De-Mod & inner decoder block 323 performs complementary demodulation to the m-ary modulation performed by modulation block 309, and, in combination with outer decoder block 324, decodes for error correction and other coding that may have been applied.

*Id.* at 10:56–11:4. Optional multiplexer 325 may be applied to multiple signals on the receive side to provide a single signal that is output through RX path 304 and RX interface 302. *Id.* at 11:4–11.

As illustrated in Figure 3, certain components that include laser driver 312 and linear amplifier 317, as well as laser diode 313, photodiode 315, and transimpedance amplifier 316 on both the transmit and receive side may be embodied in optical module 326. *See id.* at 10:27–51. Optical module 326 "can conform to a form factor of standard optical modules such as the 300pin, XENPAK, X2, XPAK, XFP or SPF and SPF+." *Id.* at 11:25–27.

*2. Illustrative Claim*

Among the challenged claims, claim 1 is independent. Independent claim 1 is reproduced below.

> 1. A method for m-ary modulation communication by a pluggable optical transceiver module comprising of:
>
> receiving a first electrical binary data signal through a system interface of the pluggable optical transceiver module;
>
> converting the first electrical binary data signal in the pluggable optical transceiver module to a first electrical m-ary modulation signal;
>
> amplifying the first electrical m-ary modulation signal to drive an optical transmitter in the pluggable optical transceiver module;
>
> emitting a first optical signal on a first wavelength responsive to and representative of the amplified first electrical m-ary modulation signal from the optical transmitter in the pluggable optical transceiver module;
>
> receiving a second optical signal on a second wavelength and producing an electrical signal from an optical detector in the pluggable optical transceiver module;

amplifying the electrical signal to facilitate clock and data recovery in the pluggable optical transceiver module;

recovering a clock data information from the amplified electrical signal to produce a second m-ary modulation signal in the pluggable optical transceiver module;

demodulating the second m-ary modulation signal to a second electrical binary data signal in the pluggable optical transceiver module; and

transmitting the second electrical binary data signal through the system interface of the pluggable optical transceiver module.

Ex. 1001, 14:60–15:22.

*3. Prosecution History*

Independent claim 1 was initially presented in the following form:

1. A method for m-ary modulation communication across an optical network by an optical transceiver module comprising of:

receiving a first electrical binary data signal through a system interface of the optical transceiver module;

converting the first electrical binary data signal in the optical transceiver module to a first electrical m-ary modulation signal;

amplifying the first electrical m-ary modulation signal to drive an optical transmitter of the optical transceiver module;

emitting a first optical signal on a first wavelength responsive to and representative of the amplified first electrical m-ary modulation signal from the optical transmitter of the optical transceiver module;

> receiving a second optical signal on a second wavelength and producing an electrical signal from an optical detector of the optical transceiver module;
>
> amplifying the electrical signal to facilitate clock and data recovery in the optical transceiver module;
>
> equalizing the amplified electrical signal and recovering clock data information to produce a second m-ary modulation signal in the optical transceiver module;
>
> demodulating the second m-ary modulation signal according to a second electrical binary signal; and
>
> transmitting the second electrical binary signal through the system interface of the optical transceiver module.

Ex. 1008, 23. This claim was rejected in a first Office Action as anticipated by Brede. *Id.* at 89–91. The first Office Action was made final because the application was a continuation of an earlier application, and "[a]ll claims [we]re drawn to the same invention claimed in the earlier application and could have been finally rejected on the grounds and art of record in the next Office Action if they had been entered in the earlier application." *Id.* at 93.

With a Request for Continued Examination, the Applicant amended the claims, particularly by amending independent claim 1 to recite a "pluggable" optical transceiver module. *Id.* at 105. Specifically, indicating added material with underline and deleted material with strikethrough, independent claim 1 was amended as follows:

> 1. A method for m-ary modulation communication ~~across an optical network~~ by ~~an~~ <u>pluggable</u> optical transceiver module comprising of:

receiving a first electrical binary data signal through a system interface of the pluggable optical transceiver module;

converting the first electrical binary data signal in the pluggable optical transceiver module to a first electrical m-ary modulation signal;

amplifying the first electrical m-ary modulation signal to drive an optical transmitter ~~of~~ in the pluggable optical transceiver module;

emitting a first optical signal on a first wavelength responsive to and representative of the amplified first electrical m-ary modulation signal from the optical transmitter ~~of~~ in the pluggable optical transceiver module;

receiving a second optical signal on a second wavelength and producing an electrical signal from an optical detector ~~of~~ in the pluggable optical transceiver module;

amplifying the electrical signal to facilitate clock and data recovery in the pluggable optical transceiver module;

~~equalizing the amplified electrical signal and~~ recovering a clock data information from the amplified electrical signal to produce a second m-ary modulation signal in the pluggable optical transceiver module;

demodulating the second m-ary modulation signal ~~according~~ to a second electrical binary data signal in the pluggable optical transceiver module; and

transmitting the second electrical binary data signal through the system interface of the pluggable optical transceiver module.

*Id.* The Examiner initially rejected this form of independent claim 1 in a non-final Office Action,

> contend[ing] that the optical transceiver of Figure 3 [of Brede] is 'pluggable' when that term is given its broadest reasonable interpretation being that the transceiver of Figure 3 will be plugged in to the network at a central office via the electrical interfaces shown in Figure 3. A similarly broad interpretation of the term 'pluggable' is met by Brede's disclosure in that at some point the optical transceiver of Figure 3 will be required to be plugged in to another element for power and data input/output.

*Id.* at 140. The Applicant then "argued that the 'pluggable' interpretation by the Examiner on the entirety of Brede's Fig. 3 is flawed." *Id.* at 185–188. Specifically, the Applicant argued that the Examiner had applied the broadest *possible* interpretation rather than the broadest *reasonable* interpretation, which the Applicant contended "could be [Brede's] optical transmitter 14 and optical receiver 16 elements combined somehow as an optical transceiver that is pluggable via pluggable coaxial lines 22, 28 to the host data terminal (HDT) 12." *Id.* at 187–188.

Although the prosecution of independent claim 1, as well as other dependent claims, addressed anticipation over Brede, further aspects of the prosecution considered obviousness over Brede in combination with other references. Claim 2 depended from claim 1 and originally recited that "the form factor of the optical transceiver module is selected from the group consisting of: SFP; SFP+; XFP; X2; XENPAK; XPA; and 300 pin transceiver form factors." *Id.* at 23. The Examiner rejected this claim for obviousness over Brede and U.S. Patent Publ. No. 2007/0031153 A1 ("Aronson"), asserting that Aronson evidenced that "these types of form factors are well known in the art" and that "[o]ne skilled in the art would have been motivated to utilize any of the claimed form factors in order to

meet design requirements, budgetary requirements, or performance requirements such as achieving 10 Gb/s." *Id.* at 92–93.

The Applicant amended claim 2 to recite the more generalized limitation that "the form factor of the pluggable optical transceiver module is a pluggable form factor standard ~~selected from the group consisting of: SFP; SFP+; XFP; X2; XENPAK; XPA; and 300 pin transceiver form factors~~." *Id.* at 106. The Examiner again rejected the claim, this time for obviousness over Brede and U.S. Patent No. 7,729,617 B2 ("Sheth"), which the Examiner cited as evidence that "standardized pluggable form factors are well known in the art." *Id.* at 137–138. As to claim 2, Applicant argued that the Examiner failed to sufficiently establish a motivation to combine the references. *Id.* at 188–189.

Following these and other arguments by the Applicant, the Examiner allowed the application. *Id.* at 207 (Notice of Allowability). The Examiner did not provide any reasons for allowance in the Notice of Allowability. *Id.*

*F. Petitioner's Asserted Prior Art*

*1. Raghavan (Ex. 1005)*

Raghavan is titled "Multi-Channel Communications Transceiver" and generally describes a transceiver system that "transmits data utilizing the baseband and one or more frequency separated transmission bands." Ex. 1005, codes (54), (57).

Raghavan describes a data transmission system "that allows very high data transmission rates over a data bus," and which "includes a transmitter system and a receiver system coupled through a transmission medium." *Id.* ¶ 14. The transmitter system "receives parallel data having N bits and separates the N bits into (K+1) subsets for transmission into the base band

and K frequency separated channels on the transmission medium." *Id.* The receiver system "receives the data from the base band and the K frequency separated channels from the transmission medium and recovers the N parallel bits of data." *Id.*

Figure 2A of Raghavan is reproduced below.

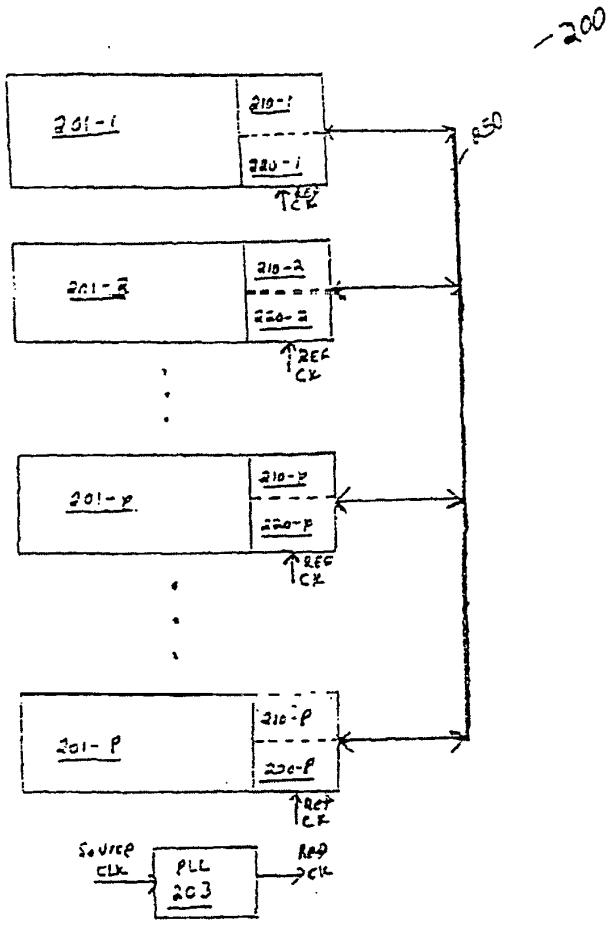


Fig. 2A

Figure 2A is a block diagram of a data transmission system taught by Raghavan. *Id.* ¶ 55. System 200 includes components 201-1 to 201-P,

which may be interconnected cards, cabinets, or chips, each 201-p of which transmits or receives data across transmission channel 250 using transmitter system 210-P and receiver system 220-P. *Id.* ¶¶ 55, 56, 58. Transmitter systems 210 and receiver systems 220 may be implemented as a transceiver formed on a single semiconductor chip. *Id.* ¶ 226.

*2. Richard (Ex. 1012)*

Richard is titled "System and Method for Optical Multiplexing and/or Demultiplexing" and generally describes "[i]mproved methods and systems for routing and aligning beams and optical elements in an optical device include a multiplexing device and/or a demultiplexing device, which includes an optical alignment element (OAE)." Ex. 1012, codes (54), (57).

Richard describes that the OAE can be used to compensate for cumulative alignment errors in an optical beam path. *Id.* ¶ 11. "The OAE allows the optical elements in a device, other than the OAE, to be placed and fixed in place without substantially compensating for optical alignment errors," with the OAE then "inserted into the beam path and adjusted." *Id.* The OAE may be part of an optical multiplexer or demultiplexer, with Richard noting that a compact form factor may be used for such a device. *Id.* ¶¶ 12–13. "The form factor may be a standard form factor typically used for a pluggable communications module which interfaces between serial transmission media and a host socket." *Id.* ¶ 13. Examples of such form factors "include the GBIC form factor, the small form factor (SFF) and the small form pluggable (SFP) form factor." *Id.*

*3. Agazzi (Ex. 1004)*

Agazzi is titled "Methods and Systems for Digitally Processing Optical Data Signals" and generally "is directed to receivers," including

optical receivers that use digital signal processing ("DSP"). Ex. 1004 code (54), ¶ 3. Figure 1B of Agazzi is reproduced below.

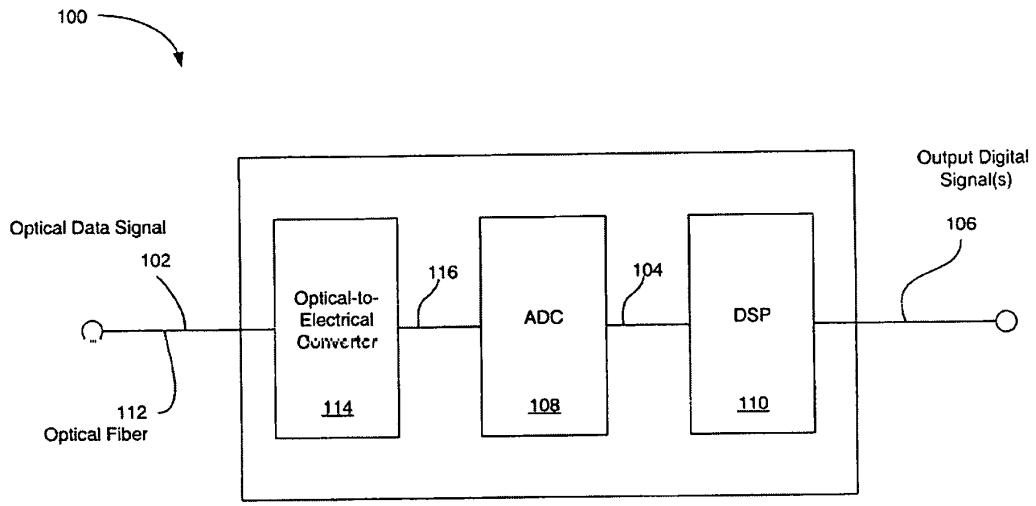


**FIG. 1B**

Figure 1B is a block diagram that illustrates optical DSP-based receiver 100. *Id.* ¶ 94. Optical data signal 102 is received over optical fiber 112 and provided to optical-to-electrical converter 114 to render electrical representation 116. *Id.* This analog signal is converted to a digital signal by analog-to-digital converter 108, thereby producing internal digital signal 104. *Id.* ¶¶ 89, 94. The digital signal is processed by digital signal processor 110, which performs such functions as "equalization, error correction . . . , timing recovery, automatic gain control, and offset compensation" to produce output digital signal 106. *Id.* ¶¶ 94, 96. In some instances, multiplexing is used so that a "plurality of optical signals is wave-division-multiplexed ('WDM') and transmitted through an optic fiber by

modulating (e.g., intensity modulating) each signal at a different wavelength." *Id.* ¶ 99.

*4. Brede (Ex. 1006)*

Brede is titled "Communicating Errors in a Telecommunications System" and generally describes "[a] method of communicating errors to a head end of a telecommunications system." Ex. 1006, codes (54), (57).

Brede describes a communication system "designed to deliver residential and business telecommunication services over a hybrid fiber-coaxial (HFC) distribution network." Ex. 1006, 18:9–12. Figure 1 of Brede is reproduced below.

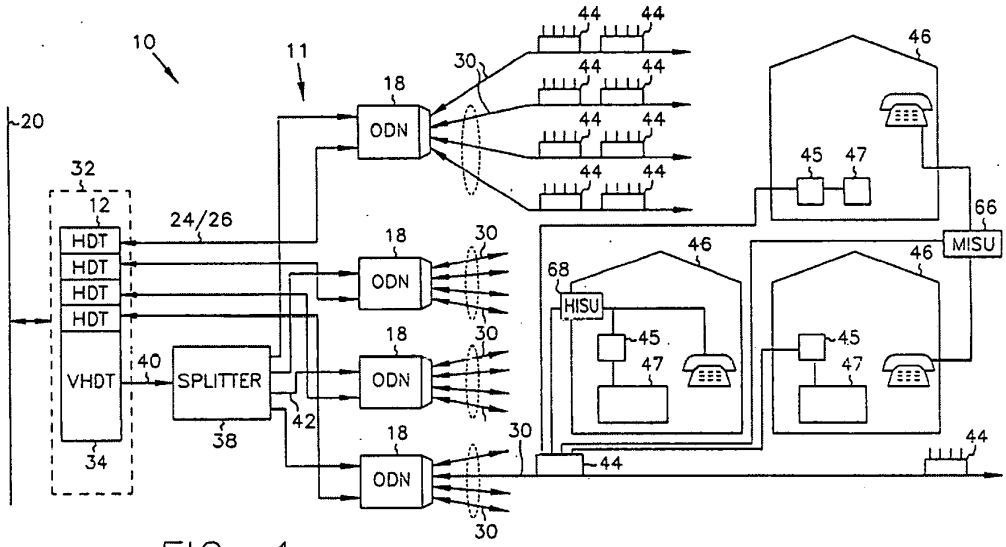


FIG. 1

Figure 1 is a block diagram illustrating communication system 10, in which HFC distribution network 11 uses optical fiber feeder lines to deliver signals to optical distribution nodes ("ODNs") 18 from head end 32. *Id.* at 18:19–23. Various modulation schemes may be supported by head end 32, including quadrature phase shift keying ("QPSK") and quadrature amplitude

modulation ("QAM"). *Id.* at 120:42–53. Host digital terminals ("HDTs") 12, normally located at head end 32, interface with trunk line 20 and communicate over optical feeder lines 24/26 with ODNs 18. *Id.* at 18:49–66, 19:15–33. Optical signals are converted by ODNs 18 "for transmission as electrical outputs" over the coaxial portion of the HFC distribution network to remote units 46. *Id.* at 20:44–48.

Figure 3 of Brede is reproduced below.

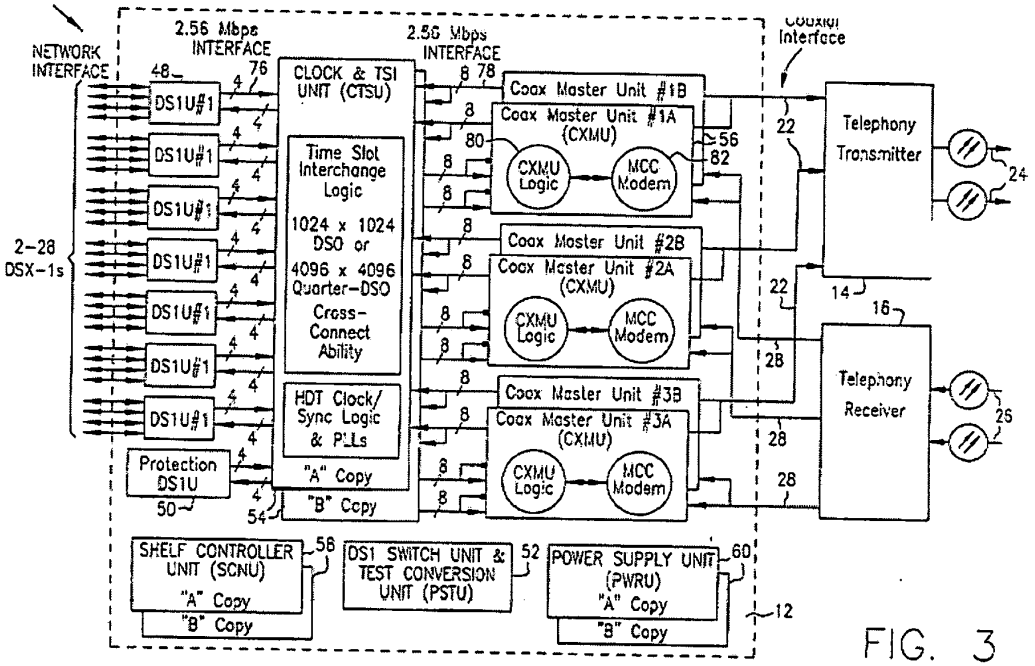


FIG. 3

signals on redundant upstream optical feeder lines 26 and applies electrical signals on coaxial RF upstream telephony information inputs 28." *Id.* at 19:23–27. "The ODN 18 provides interface between the optical feeder lines 24 and 16 and coaxial distribution legs 30" and "combines downstream video and telephony onto coaxial distribution legs 30." *Id.* at 19:27–31.

*5. Halgren (Ex. 1019)*

Halgren is titled "Jitter Control in Optical Network" and generally describes an "electro-optic interface structure for use in a multi-protocol [optical-to-electrical-to-optical wavelength division multiplexing] network." Ex. 1019, code (54), ¶ 18. The structure "can be implemented using e.g. Small Form factor Pluggable (SFP) tributary interface optical fib[er] transceivers fitted to a client interface or module." *Id.* ¶ 69.

*6. Feher (Ex. 1024)*

Feher is titled "Bit Rate Agile Third-Generation Wireless CDMA, GSM, TDMA and OFDM System" and generally relates to "Bit Rate Agile (BRA) signal processors." Ex. 1024, code (54), 1:23–24. In particular, Feher describes implcmcntations of QPSK transceivers. *See* Ex. 1024, 6:50–54. Such implementations may include a "blind equalizer." *Id.* at 35:46–52.

*7. Gertel (Ex. 1015)*

Gertel is titled "Dual-Polarization Fiber Optic Communications Link" and generally describes a "[a] dual-polarization fiber optic communications link comprising a dual-polarized, single-frequency laser source emitting a laser lightwave with components having two polarizations." Ex. 1014, code (54), 2:20–23.

## III. DENIAL UNDER 35 U.S.C. § 325(d)

Patent Owner asserts, *inter alia*, that we should deny the Petition under 35 U.S.C. § 325(d) because the Petition presents the same art and arguments that the Office previously analyzed and Petitioner fails to show that the Office erred during prosecution. Prelim. Resp. 10–30. We agree with Patent Owner for the reasons discussed below.

### *A. Standards of Law*

"In determining whether to institute or order [an *inter partes* review], the Director may take into account whether, and reject the petition or request because, the same or substantially the same prior art or arguments previously were presented to the Office." 35 U.S.C. § 325(d). Thus, Section 325(d) provides that the Director may elect not to institute a proceeding if the challenge to the patent is based on matters previously presented to the Office.[1] *Advanced Bionics, LLC v. Med-El Elektromedizinische Geräte GmbH*, IPR2019-01469, Paper 6 at 7 (PTAB Feb. 13, 2020) (precedential) ("*Advanced Bionics*").

In evaluating the exercise of discretion to deny institution under Section 325(d), the Board uses the following two-part framework: (1) determining whether the same or substantially the same art previously was presented to the Office or whether the same or substantially the same arguments previously were presented to the Office; and (2) if either condition of the first part of the framework is satisfied, determining whether the petitioner has demonstrated that the Office erred in a manner material to the patentability of challenged claims. *Advanced Bionics*, Paper 6 at 8.

---

[1] The Board institutes trial on behalf of the Director. 37 C.F.R. § 42.4(a).

In applying the two-part framework, we consider several non-exclusive factors, including:

> (a) the similarities and material differences between the asserted art and the prior art involved during examination;
>
> (b) the cumulative nature of the asserted art and the prior art evaluated during examination;
>
> (c) the extent to which the asserted art was evaluated during examination, including whether the prior art was the basis for rejection;
>
> (d) the extent of the overlap between the arguments made during examination and the manner in which petitioner relies on the prior art or patent owner distinguishes the prior art;
> (e) whether petitioner has pointed out sufficiently how the examiner erred in its evaluation of the asserted prior art; and
>
> (f) the extent to which additional evidence and facts presented in the petition warrant reconsideration of the prior art or arguments.

*Becton, Dickinson & Co. v. B. Braun Melsungen AG*, IPR2017-01586, Paper 8 at 17–18 (PTAB Dec. 15, 2017) (precedential as to Section III.C.5, first paragraph) ("*Becton, Dickinson*"). *Becton, Dickinson* factors (a), (b), and (d) relate to whether the art or arguments presented in the Petition are the same or substantially the same as those previously presented to the Office. *Advanced Bionics*, Paper 6 at 10. Factors (c), (e), and (f) "relate to whether the petitioner has demonstrated a material error by the Office" in its prior consideration of that art or arguments. *Id.* Only if the same or substantially the same art or arguments were previously presented to the Office do we consider whether petitioner has demonstrated a material error by the Office.

*Id.* "At bottom, this framework reflects a commitment to defer to previous Office evaluations of the evidence of record unless material error is shown." *Id.* at 9.

*B. Obviousness Challenges Over Brede and Halgren*

Among Petitioner's challenges are those that allege obviousness over Brede and Halgren. *See* Pet. 51–60.

*1. Whether The Same or Substantially the Same Art or Arguments Were Previously Presented*

With respect to the first part of the *Advanced Bionics* framework, we find that substantially the same art and substantially the same arguments were previously presented to the Office.

Petitioner relies on Brede for its description of "an optical data transmission system that uses m-ary modulation, including the conversion of electrical binary data to an electrical m-ary modulation signal," and for its description of "how the transmitted signal can be corrected and cleaned to remove unwanted noise, as well as how clock data can be recovered." Pet. 51 (citing Ex. 1006, 19:7–33, 42:61–66, 48:64–49:5, 49:29–33; Ex. 1002 ¶ 191). Petitioner relies on Halgren for its disclosure of "an electro-optical interface structure," particularly its "confirm[ation] that a [person of ordinary skill in the art] would have understood the value of various form factors in various settings." *Id.* (citing Ex. 1019, abst., ¶¶ 69, 70; Ex. 1002 ¶ 192). This "confirmation," according to Petitioner, results from Halgren's disclosure that "interface encoding and decoding techniques can be implemented in a universal form factor transceiver" and that "modulation and optical-to-electrical signal conversion can occur in other transceivers and form factors." *Id.* (citing Ex. 1019 ¶¶ 69, 70). Petitioner

contends that a person of ordinary skill in the art "would have been motivated to implement *Brede's* optical devices with *Halgren's* pluggable form factors, arriving at a pluggable optical transceiver."[2] *Id.* at 55 (citing Ex. 1002 ¶¶ 201–204; Ex. 1012 ¶ 58).

With respect to *Becton, Dickinson*'s factor (a), there is no dispute that Brede itself was involved during examination, and that portions of it were expressly cited by the Examiner in multiple Office Actions. *See, e.g.*, Ex. 1008, 89–92, 132–140; Pet. 15, 53. Patent Owner correctly observes that "[t]he Examiner applied Brede in multiple office actions for allegedly disclosing the claimed 'optical transceiver module.'" Prelim. Resp. 13; Ex. 1008, 90, 92 (Examiner citing Brede for teaching an "optical transceiver module"), 140 (Examiner citing Brede for teaching an "optical transceiver").

With respect to *Becton, Dickinson*'s factor (b), Patent Owner contends that Halgren "is cumulative of either of the secondary references applied by the Examiner during prosecution, namely, Aronson and Sheth." Prelim. Resp. 13. Patent Owner specifically contends that "Petitioner applies Halgren for its alleged disclosure of standard form factors to be combined with Brede, which is the same as what the Examiner did with Aronson and

[2] In addition to reciting the "pluggable" aspect of the optical transceiver module that performs the method of claim 1 in the preamble, this "pluggable" aspect is reiterated in the body of the claim each time the optical transceiver module is recited. Patent Owner contends that the preamble is limiting. Prelim. Resp. 36 ("The preamble of Claim 1 is limiting because there is an antecedent reference from the body of the claim to 'the pluggable optical transceiver module' in the preamble."). Petitioner does not explicitly take a position on whether the preamble is limiting, but expressly addresses the "pluggable" aspect of the optical transceiver in its analysis. *E.g.*, Pet. 15, 22–24, 26, 32, 41–44, 53, 54, 58.

Sheth." *Id.* at 13; Ex. 1008, 93 (Examiner combining Brede with Aronson's disclosure of "types of form factors"), 137–138 (Examiner combining Brede with Sheth's disclosure of "standardized pluggable form factors"). That is, Petitioner argues that a person of ordinary skill in the art "would have been motivated to implement *Brede's* optical devices with *Halgren's* pluggable form factors, arriving at a pluggable optical transceiver." Pet. 55.

We agree with Patent Owner's characterizations of Halgren, Aronson, and Sheth. *See* Prelim. Resp. 13–14. In particular, we agree with Patent Owner that "Halgren is substantially the same because it is applied for its alleged disclosure of standard form factors into which Brede's device can allegedly be incorporated, just as the Examiner applied Aronson and Sheth as disclosing form factors into which Brede's device can allegedly be installed." *Id.* at 13–14 (citing Ex. 1008, 93, 137–138). We further note that the Examiner applied Sheth, in particular, for disclosing "standardized *pluggable* form factors," in the same manner that Petitioner applies Halgren's pluggable form factors to Brede's optical device. *See* Pet. 55; Ex. 1008, 137 138.

In this respect, we thus also agree with Patent Owner that there is significant overlap between the arguments made during examination and the manner in which Petitioner relies on the prior art, as implicated by *Becton, Dickinson*'s factor (d). *See id.* at 14–18. That is, "Petitioner is applying the same art, Brede, as allegedly disclosing an optical transceiver module as modified by a secondary reference . . . applied as teaching standard form factors." *Id.* at 14 (citing Pet. 55). As discussed extensively above, this is the same basis under which the Examiner originally rejected claims during

prosecution, and which the Applicant overcame. *See* Ex. 1008, 93, 137–138, 140.

We thus conclude that each of the *Becton, Dickinson* factors relevant to the first part of the *Advanced Bionics* framework support the finding that substantially the same art and substantially the same arguments were previously presented to the Office.

*2. Whether the Petitioner has Demonstrated that the Office Erred in a Manner Material to Patentability*

With respect to the second part of the *Advanced Bionics* framework, we find that Petitioner has not demonstrated that the Office erred in a manner material to the patentability of challenged claims. As discussed below, Petitioner does not meaningfully assess the record of examination or explain sufficiently how or why *Becton, Dickinson* factor (c), (e), or (f) supports its positions.

The asserted art (in the case of Brede) or art cumulative to the asserted art (in the case of Halgren) was evaluated extensively during prosecution, including forming a basis for multiple rejections by the Examiner, as evaluated by *Becton, Dickinson* factor (c). *See* Ex. 1008, 93, 137–138, 140. Specifically, as Patent Owner observes, in these rejections, the Examiner found that each limitation of claim 1 was disclosed by Brede, and claim 2 was disclosed by Brede and Aronson or Brede and Sheth. *Id.* at 89–93, 132–134, 137–138; *see* Prelim. Resp. 14.

When assessing *Becton Dickinson's* factor (e), we consider whether Petitioner "point[s] out sufficiently how the examiner erred in its evaluation of the asserted prior art." *Supra* 19 (factors). According to Petitioner, the Examiner "misapprehended (1) the well-known aspect of the pluggable

nature of these transceivers and (2) that the Applicant was aware of the prior art status of the sole distinguishing argument it made." Pet. 15. The second of these alleged Examiner errors appears to hint at some impropriety by the Applicant during prosecution because discussion of "the pluggable nature of [Applicant's] claims" was "noted in the background of [a related provisional application]" but "shifted . . . to the main portion of the specification." *Id.* But Petitioner does not meaningfully develop this argument and does not sufficiently explain how the Examiner's purported misapprehension regarding the *Applicant's* awareness amounts to error by the Examiner. Indeed, included as part of its "DETAILED DESCRIPTION," the '795 patent explicitly states:

> The RX 133,136 and TX 134,135 circuitry of transceivers 100,101, or portions thereof, for example, PD 315a, 315b and LA 317a, 317b, can be combined with *industry standard* optical modules. *Common* optical module standards are 300pin, XENPAK, X2, and XPAK transponders and XFP or SFP and SPF+ transceivers.

Ex. 1001, 11:12–17 (emphases added). And, as Patent Owner points out, the Examiner nonetheless "issued office actions to Applicant citing references like Aronson and Sheth as disclosing standard form factors." Prelim. Resp. 12 n.3.

We are also not persuaded by Petitioner's assertion that the Examiner "misapprehended . . . the well-known aspect of the pluggable nature of these transceivers." Petitioner elaborates on its allegation of Examiner error by asserting that "the Examiner correctly identified the teachings of *Brede*, but misapprehended the knowledge of a [person of ordinary skill in the art], including that known pluggable form factors described in *Halgren*, which

was, in fact, admitted during the prosecution of this family by the Applicant, and which was widely known in the industry's discussion and adoption of various [multi-source agreements]." Pet. 53 (citing Ex. 1019 ¶¶ 69–70; Ex. 1016, 3–5; Ex. 1017, 16, 70; Ex. 1002 ¶ 198). However, Petitioner's assertion is belied by the Examiner's specific citation and application of multiple references during prosecution for their disclosure of standard (pluggable) form factors. *See, e.g.*, Ex. 1008, 93 (Examiner stating that "as evidenced by Aronson, these types of form factors [SFP, SFP+, XFP, X2, XENPAK, XPA, and 300-pin transceiver form factors] are well known in the art"), 131 (Examiner stating that "Gilliland teaches that the concept of a pluggable optical transceiver module is well known in the art," as well as a "small form factor pluggable (SFP) configuration"), 137 (Examiner stating that "as evidenced by Sheth, standardized pluggable form factors are well known in the art"). Given that the Examiner explicitly stated that form factors, the concept of a pluggable optical transceiver module, and standardized pluggable form factors are "well known in the art," Petitioner's argument is not persuasive.

When assessing *Becton, Dickinson's* factor (f), we look for some explanation of how or why "the extent to which additional evidence and facts presented in the petition warrant reconsideration of the prior art or arguments." *Supra* 19 (factors). Petitioner directs our attention to no specific additional evidence or facts that warrant reconsideration of the Examiner's determination. We accordingly conclude that each of the *Becton, Dickinson* factors relevant to the second part of the *Advanced Bionics* framework support the finding that Petitioner has not demonstrated

that the Office erred in a manner material to the patentability of challenged claims.

Because we find that, for the obviousness challenges over Brede and Halgren, (1) substantially the same art and substantially the same arguments were previously presented to the Office, and (2) Petitioner has not demonstrated that the Office erred, we conclude that it is appropriate to exercise our discretion under 35 U.S.C. § 325(d) to deny the Petition with respect to those grounds.

*C. Obviousness Challenge over Raghavan and Richard*

Petitioner also advances challenges that allege obviousness over Raghavan and Richard. *See* Pet. 22–40. Neither party asserts that Raghavan or Richard were involved during examination of the '795 patent. Pet. 15; Prelim. Resp. 21.

Petitioner relies on Raghavan for its description of "a transceiver chip that can transmit data using multiple frequency-separated channels," and on Richard for its disclosure of "a variety of form factors to allow for 'use in a hot pluggable environment.'" *Id.* at 22 (citing Ex. 1005, code (57); Ex. 1012 ¶ 58; Ex. 1027 ¶¶ 4, 45; Ex. 1002 ¶ 77). Petitioner contends that a person of ordinary skill in the art "would have been motivated to provide the functionality of *Raghavan's* transceiver chip into *Richard's* form factors to make *Raghavan's* transceiver chip hot pluggable." *Id.* at 22–23 (citing Ex. 1012 ¶ 58; Ex. 1002 ¶¶ 77–78). This rationale notably parallels Petitioner's contention for the combination of Brede and Halgren. *See id.* at 55 (Petitioner contending that a person of ordinary skill in the art "would have been motivated to implement *Brede's* optical devices with *Halgren's* pluggable form factors, arriving at a pluggable optical transceiver.").

Specifically, Petitioner presents an analysis that generally parallels its analysis over Brede and Halgren, with Raghavan substituting for Brede and Richard substituting for Halgren.

In considering the *Becton, Dickinson* factors relevant to the first part of the *Advanced Bionics* test, we thus find significant similarities with the art involved during examination (factor (a)) such that the art is cumulative of the art evaluated during examination (factor (b)), and that there is significant overlap with the arguments considered during examination (factor (d)). As Patent Owner asserts, "[c]umulative art was cited for identical teachings and the Petitioner's combination of a reference teaching an optical transceiver module and a reference teaching a standard form factor is the same argument presented by the Examiner." Prelim. Resp. 21; *see also id.* at 22–23. Petitioner alleges no different prosecution errors by the Examiner beyond those that we discuss above in the context of the Brede-Halgren challenges in evaluating *Becton, Dickinson* factors (c), (e), and (f), which are relevant to the second part of the *Advanced Bionics* test.

We accordingly find that, for the obviousness challenges over Raghavan and Richard, (1) substantially the same art and substantially the same arguments were previously presented to the Office, and (2) Petitioner has not demonstrated that the Office erred. We therefore conclude that it is appropriate to exercise our discretion under 35 U.S.C. § 325(d) to deny the Petition with respect to those grounds.

*D. Obviousness over Agazzi and Richard*

In addition to its other challenges, Petitioner alleges obviousness over Agazzi and Richard. *See* Pet. 39–48. Neither party asserts that Agazzi was involved during examination of the'795 patent. Pet. 15; Prelim. Resp. 25.

Petitioner cites Agazzi as describing "electrical and optical receivers and transceivers that rely on processing of optical signals," and cites Richard for the same disclosure relied on in the Brede-Halgren and Raghavan-Richard challenges, namely "[a] variety of form factors [that] allow for 'use in a hot pluggable environment.'" *Id.* at 40–41 (citing Ex. 1004, abst.; Ex. 1012 ¶ 58; Ex. 1027 ¶¶ 4, 45; Ex. 1002 ¶ 139). Petitioner's rationale for combining the teachings of Agazzi and Richard again parallels the rationale advanced for the Brede-Halgren and Raghavan-Richard challenges: "A [person of ordinary skill in the art] would have been motivated to provide the functionality of *Agazzi* into *Richard's* form factors to incorporate the functionality of *Agazzi* into a hot pluggable environment." *Id.* at 41 (citing Ex. 1012 ¶ 58; Ex. 1002 ¶ 140); *see id.* at 22–23 (Petitioner contending that a person of ordinary skill in the art "would have been motivated to provide the functionality of *Raghavan's* transceiver chip into *Richard's* form factors to make *Raghavan's* transceiver chip hot pluggable."), 55 (Petitioner contending that a person of ordinary skill in the art "would have been motivated to implement *Brede's* optical devices with *Halgren's* pluggable form factors, arriving at a pluggable optical transceiver."). Specifically, Petitioner again presents an analysis that parallels its analysis over Brede and Halgren, this time with Agazzi substituting for Brede and Richard again substituting for Halgren.

In considering the *Becton, Dickinson* factors relevant to the first part of the *Advanced Bionics* test, we thus find significant similarities with the art involved during examination (factor (a)) such that the art is cumulative of the art evaluated during examination (factor (b)), and that there is significant overlap with the arguments considered during examination (factor (d)). As

Patent Owner asserts, "Petitioner presents substantially the same proposed combination as the Examiner of a reference teaching an optical transceiver module and a reference teaching a standard form factor." Prelim. Resp. 25–26; *see also id.* at 26–27. Petitioner alleges no different prosecution errors by the Examiner beyond those that we discuss above in the context of the Brede-Halgren challenges in evaluating *Becton, Dickinson* factors (c), (e), and (f), which are relevant to the second part of the *Advanced Bionics* test.

We accordingly find that, for the obviousness challenges over Agazzi and Richard, (1) substantially the same art and substantially the same arguments were previously presented to the Office, and (2) Petitioner has not demonstrated that the Office erred. We therefore conclude that it is appropriate to exercise our discretion under 35 U.S.C. § 325(d) to deny the Petition with respect to those grounds.

*E. Obviousness Challenges, Claims 8, 9, 11, 12*

Petitioner adds Feher to the Raghavan-Richards, Agazzi-Richards, and Brede-Halgren combinations to disclose claims 8 and 9, and Gertel to the Brede-Halgren, Raghavan-Richards, and Agazzi-Richards combinations to disclose claims 11–12. Pet. 14–15. Neither party asserts that Feher or Gertel were involved during examination of the '795 patent. *See* Pet. 15; Prelim. Resp. 27–29. Patent Owner asserts that Feher is cumulative because the art and argument is "the same or substantially the same as that applied during examination because both the Petitioner and the Examiner found the limitation [of claim 17] in Brede." Prelim. Resp. 28. Patent Owner asserts that Gertel is also cumulative of prior art considered during examination, in that "[d]uring prosecution, the Examiner took Official Notice that dual polarization was well known in the art and applied it in a rejection based on

Brede in view of the Official Notice to reject claims corresponding to issued Claims 11–12." *Id.* at 29 (citing Ex. 1008, 138–139).

We find that the addition of Feher and Gertel does not change the calculus regarding whether the same or substantially the same prior art previously was presented to the Office. We agree with Patent Owner's arguments. *See* Prelim. Resp. 27–29. We find that Feher and Gertel have significant similarities with the art involved during examination (Brede, Official Notice) (factor (a)) such that the art is cumulative of the art evaluated during examination (factor (b)), and that there is significant overlap with the arguments considered during examination (factor (d)). Petitioner alleges no different prosecution errors by the Examiner beyond those that we discuss above in the context of the Brede-Halgren challenges in evaluating *Becton, Dickinson* factors (c), (e), and (f), which are relevant to the second part of the *Advanced Bionics* test.

We accordingly find that, for the obviousness challenges including Feher and Gertel (1) substantially the same art and substantially the same arguments were previously presented to the Office, and (2) Petitioner has not demonstrated that the Office erred. We therefore conclude that it is appropriate to exercise our discretion under 35 U.S.C. § 325(d) to deny the Petition with respect to those grounds.

## IV. CONCLUSION

After considering the evidence and arguments presented in the Petition and Preliminary Response, we determine that, for each of Petitioner's challenges, it is appropriate to exercise our discretion under 35 U.S.C. § 325(d) to deny the Petition with respect to those grounds. We

accordingly exercise that discretion for the Petition as a whole and deny institution of an *inter partes* review.

## V. ORDER

In consideration of the foregoing, it is hereby:

ORDERED that the Petition is *denied*, and no trial is instituted.

For PETITIONER:

Jason A. Engel
Mark G. Knedeisen
Erik J. Halverson
Katherine L. Allor
K&L GATES LLP
Jason.Engel.PTAB@klgates.com
mark.knedeisen@klgates.com
erik.halverson@klgates.com
Katy.allor@klgates.com

For PATENT OWNER:

James T. Carmichael
Stephen T. Schreiner
Minghui Yang
CARMICHAEL IP, PLLC
NextGen-IPRs@carmichaelip.com
jim@carmichalip.com
schreiner@carmichaelip.com
mitch@carmichaelip.com

PTO/AIA/26 (04-14)
Approved for use through 07/31/2016. OMB 0651-0031
U.S. Patent and Trademark Office; U.S. DEPARTMENT OF COMMERCE
Under the Paperwork Reduction Act of 1995, no persons are required to respond to a collection of information unless it displays a valid OMB control number.

# TERMINAL DISCLAIMER TO OBVIATE A DOUBLE PATENTING REJECTION OVER A "PRIOR" PATENT

Docket Number (Optional)
UBI-002D

In re Application of: Alexander Soto and Walter Soto

Application No.: 15/095,137

Filed: April 10, 2016

For: System and Method for Performing High-Speed Communications Over Fiber Optical Networks

The applicant, Alexander Soto and Walter Soto, owner of 100 percent interest in the instant application hereby disclaims, except as provided below, the terminal part of the statutory term of any patent granted on the instant application which would extend beyond the expiration date of the full statutory term of **prior patent** No. 9,337,948 as the term of said **prior patent** is presently shortened by any terminal disclaimer. The applicant hereby agrees that any patent so granted on the instant application shall be enforceable only for and during such period that it and the **prior patent** are commonly owned. This agreement runs with any patent granted on the instant application and is binding upon the grantee, its successors or assigns.

In making the above disclaimer, the applicant does not disclaim the terminal part of the term of any patent granted on the instant application that would extend to the expiration date of the full statutory term of the **prior patent**, "as the term of said **prior patent** is presently shortened by any terminal disclaimer," in the event that said **prior patent** later:

expires for failure to pay a maintenance fee;
is held unenforceable;
is found invalid by a court of competent jurisdiction;
is statutorily disclaimed in whole or terminally disclaimed under 37 CFR 1.321;
has all claims canceled by a reexamination certificate;
is reissued; or
is in any manner terminated prior to the expiration of its full statutory term as presently shortened by any terminal disclaimer.

Check either box 1 or 2 below, if appropriate.

1. ☑ The undersigned is the applicant. If the applicant is an assignee, the undersigned is authorized to act on behalf of the assignee.

I hereby acknowledge that any willful false statements made are punishable under 18 U.S.C. 1001 by fine or imprisonment of not more than five (5) years, or both.

2. ☐ The undersigned is an attorney or agent of record. Reg. No._____

/Alexander Soto/ — Signature
Sept. 4, 2017 — Date

Alexander Soto
Typed or printed name

Title
Telephone Number

☐ Terminal disclaimer fee under 37 CFR 1.20(d) included.

**WARNING: Information on this form may become public. Credit card information should not be included on this form. Provide credit card information and authorization on PTO-2038.**

This collection of information is required by 37 CFR 1.321. The information is required to obtain or retain a benefit by the public which is to file (and by the USPTO to process) an application. Confidentiality is governed by 35 U.S.C. 122 and 37 CFR 1.11 and 1.14. This collection is estimated to take 12 minutes to complete, including gathering, preparing, and submitting the completed application form to the USPTO. Time will vary depending upon the individual case. Any comments on the amount of time you require to complete this form and/or suggestions for reducing this burden, should be sent to the Chief Information Officer, U.S. Patent and Trademark Office, U.S. Department of Commerce, P.O. Box 1450, Alexandria, VA 22313-1450. DO NOT SEND FEES OR COMPLETED FORMS TO THIS ADDRESS. **SEND TO: Commissioner for Patents, P.O. Box 1450, Alexandria, VA 22313-1450.**

If you need assistance in completing the form, call 1-800-PTO-9199 and select option 2.

# Privacy Act Statement

The **Privacy Act of 1974 (P.L. 93-579)** requires that you be given certain information in connection with your submission of the attached form related to a patent application or patent. Accordingly, pursuant to the requirements of the Act, please be advised that: (1) the general authority for the collection of this information is 35 U.S.C. 2(b)(2); (2) furnishing of the information solicited is voluntary; and (3) the principal purpose for which the information is used by the U.S. Patent and Trademark Office is to process and/or examine your submission related to a patent application or patent. If you do not furnish the requested information, the U.S. Patent and Trademark Office may not be able to process and/or examine your submission, which may result in termination of proceedings or abandonment of the application or expiration of the patent.

The information provided by you in this form will be subject to the following routine uses:

1. The information on this form will be treated confidentially to the extent allowed under the Freedom of Information Act (5 U.S.C. 552) and the Privacy Act (5 U.S.C 552a). Records from this system of records may be disclosed to the Department of Justice to determine whether disclosure of these records is required by the Freedom of Information Act.
2. A record from this system of records may be disclosed, as a routine use, in the course of presenting evidence to a court, magistrate, or administrative tribunal, including disclosures to opposing counsel in the course of settlement negotiations.
3. A record in this system of records may be disclosed, as a routine use, to a Member of Congress submitting a request involving an individual, to whom the record pertains, when the individual has requested assistance from the Member with respect to the subject matter of the record.
4. A record in this system of records may be disclosed, as a routine use, to a contractor of the Agency having need for the information in order to perform a contract. Recipients of information shall be required to comply with the requirements of the Privacy Act of 1974, as amended, pursuant to 5 U.S.C. 552a(m).
5. A record related to an International Application filed under the Patent Cooperation Treaty in this system of records may be disclosed, as a routine use, to the International Bureau of the World Intellectual Property Organization, pursuant to the Patent Cooperation Treaty.
6. A record in this system of records may be disclosed, as a routine use, to another federal agency for purposes of National Security review (35 U.S.C. 181) and for review pursuant to the Atomic Energy Act (42 U.S.C. 218(c)).
7. A record from this system of records may be disclosed, as a routine use, to the Administrator, General Services, or his/her designee, during an inspection of records conducted by GSA as part of that agency's responsibility to recommend improvements in records management practices and programs, under authority of 44 U.S.C. 2904 and 2906. Such disclosure shall be made in accordance with the GSA regulations governing inspection of records for this purpose, and any other relevant (*i.e.*, GSA or Commerce) directive. Such disclosure shall not be used to make determinations about individuals.
8. A record from this system of records may be disclosed, as a routine use, to the public after either publication of the application pursuant to 35 U.S.C. 122(b) or issuance of a patent pursuant to 35 U.S.C. 151. Further, a record may be disclosed, subject to the limitations of 37 CFR 1.14, as a routine use, to the public if the record was filed in an application which became abandoned or in which the proceedings were terminated and which application is referenced by either a published application, an application open to public inspection or an issued patent.
9. A record from this system of records may be disclosed, as a routine use, to a Federal, State, or local law enforcement agency, if the USPTO becomes aware of a violation or potential violation of law or regulation.

PTO/AIA/26 (04-14)
Approved for use through 07/31/2016. OMB 0651-0031
U.S. Patent and Trademark Office; U.S. DEPARTMENT OF COMMERCE
Under the Paperwork Reduction Act of 1995, no persons are required to respond to a collection of information unless it displays a valid OMB control number.

| TERMINAL DISCLAIMER TO OBVIATE A DOUBLE PATENTING REJECTION OVER A "PRIOR" PATENT | Docket Number (Optional) UBI-002D |
|---|---|

In re Application of: Alexander Soto and Walter Soto

Application No.: 15/095,137

Filed: April 10, 2016

For: System and Method for Performing High-Speed Communications Over Fiber Optical Networks

The applicant, Alexander Soto and Walter Soto, owner of 100 percent interest in the instant application hereby disclaims, except as provided below, the terminal part of the statutory term of any patent granted on the instant application which would extend beyond the expiration date of the full statutory term of **prior patent** No. 9,337,948 as the term of said **prior patent** is presently shortened by any terminal disclaimer. The applicant hereby agrees that any patent so granted on the instant application shall be enforceable only for and during such period that it and the **prior patent** are commonly owned. This agreement runs with any patent granted on the instant application and is binding upon the grantee, its successors or assigns.

In making the above disclaimer, the applicant does not disclaim the terminal part of the term of any patent granted on the instant application that would extend to the expiration date of the full statutory term of the **prior patent**, "as the term of said **prior patent** is presently shortened by any terminal disclaimer," in the event that said **prior patent** later:

expires for failure to pay a maintenance fee;
is held unenforceable;
is found invalid by a court of competent jurisdiction;
is statutorily disclaimed in whole or terminally disclaimed under 37 CFR 1.321;
has all claims canceled by a reexamination certificate;
is reissued; or
is in any manner terminated prior to the expiration of its full statutory term as presently shortened by any terminal disclaimer.

Check either box 1 or 2 below, if appropriate.

1. ☑ The undersigned is the applicant. If the applicant is an assignee, the undersigned is authorized to act on behalf of the assignee.

I hereby acknowledge that any willful false statements made are punishable under 18 U.S.C. 1001 by fine or imprisonment of not more than five (5) years, or both.

2. ☐ The undersigned is an attorney or agent of record. Reg. No._____

/Walter Soto/ — Signature
Sept. 4, 2017 — Date

Walter Soto
Typed or printed name

Title
Telephone Number

☐ Terminal disclaimer fee under 37 CFR 1.20(d) included.

**WARNING: Information on this form may become public. Credit card information should not be included on this form. Provide credit card information and authorization on PTO-2038.**

This collection of information is required by 37 CFR 1.321. The information is required to obtain or retain a benefit by the public which is to file (and by the USPTO to process) an application. Confidentiality is governed by 35 U.S.C. 122 and 37 CFR 1.11 and 1.14. This collection is estimated to take 12 minutes to complete, including gathering, preparing, and submitting the completed application form to the USPTO. Time will vary depending upon the individual case. Any comments on the amount of time you require to complete this form and/or suggestions for reducing this burden, should be sent to the Chief Information Officer, U.S. Patent and Trademark Office, U.S. Department of Commerce, P.O. Box 1450, Alexandria, VA 22313-1450. DO NOT SEND FEES OR COMPLETED FORMS TO THIS ADDRESS. **SEND TO: Commissioner for Patents, P.O. Box 1450, Alexandria, VA 22313-1450.**

If you need assistance in completing the form, call 1-800-PTO-9199 and select option 2.

# Privacy Act Statement

The **Privacy Act of 1974 (P.L. 93-579)** requires that you be given certain information in connection with your submission of the attached form related to a patent application or patent. Accordingly, pursuant to the requirements of the Act, please be advised that: (1) the general authority for the collection of this information is 35 U.S.C. 2(b)(2); (2) furnishing of the information solicited is voluntary; and (3) the principal purpose for which the information is used by the U.S. Patent and Trademark Office is to process and/or examine your submission related to a patent application or patent. If you do not furnish the requested information, the U.S. Patent and Trademark Office may not be able to process and/or examine your submission, which may result in termination of proceedings or abandonment of the application or expiration of the patent.

The information provided by you in this form will be subject to the following routine uses:

1. The information on this form will be treated confidentially to the extent allowed under the Freedom of Information Act (5 U.S.C. 552) and the Privacy Act (5 U.S.C 552a). Records from this system of records may be disclosed to the Department of Justice to determine whether disclosure of these records is required by the Freedom of Information Act.
2. A record from this system of records may be disclosed, as a routine use, in the course of presenting evidence to a court, magistrate, or administrative tribunal, including disclosures to opposing counsel in the course of settlement negotiations.
3. A record in this system of records may be disclosed, as a routine use, to a Member of Congress submitting a request involving an individual, to whom the record pertains, when the individual has requested assistance from the Member with respect to the subject matter of the record.
4. A record in this system of records may be disclosed, as a routine use, to a contractor of the Agency having need for the information in order to perform a contract. Recipients of information shall be required to comply with the requirements of the Privacy Act of 1974, as amended, pursuant to 5 U.S.C. 552a(m).
5. A record related to an International Application filed under the Patent Cooperation Treaty in this system of records may be disclosed, as a routine use, to the International Bureau of the World Intellectual Property Organization, pursuant to the Patent Cooperation Treaty.
6. A record in this system of records may be disclosed, as a routine use, to another federal agency for purposes of National Security review (35 U.S.C. 181) and for review pursuant to the Atomic Energy Act (42 U.S.C. 218(c)).
7. A record from this system of records may be disclosed, as a routine use, to the Administrator, General Services, or his/her designee, during an inspection of records conducted by GSA as part of that agency's responsibility to recommend improvements in records management practices and programs, under authority of 44 U.S.C. 2904 and 2906. Such disclosure shall be made in accordance with the GSA regulations governing inspection of records for this purpose, and any other relevant (*i.e.*, GSA or Commerce) directive. Such disclosure shall not be used to make determinations about individuals.
8. A record from this system of records may be disclosed, as a routine use, to the public after either publication of the application pursuant to 35 U.S.C. 122(b) or issuance of a patent pursuant to 35 U.S.C. 151. Further, a record may be disclosed, subject to the limitations of 37 CFR 1.14, as a routine use, to the public if the record was filed in an application which became abandoned or in which the proceedings were terminated and which application is referenced by either a published application, an application open to public inspection or an issued patent.
9. A record from this system of records may be disclosed, as a routine use, to a Federal, State, or local law enforcement agency, if the USPTO becomes aware of a violation or potential violation of law or regulation.

# Electronic Patent Application Fee Transmittal

| | |
|---|---|
| **Application Number:** | 15095137 |
| **Filing Date:** | 10-Apr-2016 |
| **Title of Invention:** | SYSTEM AND METHOD FOR PERFORMING HIGH-SPEED COMMUNICATIONS OVER FIBER OPTICAL NETWORKS |
| **First Named Inventor/Applicant Name:** | Alexander Soto |
| **Filer:** | Alexander Ivan Soto |
| **Attorney Docket Number:** | UBI-002D |

Filed as Small Entity

**Filing Fees for Utility under 35 USC 111(a)**

| Description | Fee Code | Quantity | Amount | Sub-Total in USD($) |
|---|---|---|---|---|
| **Basic Filing:** | | | | |
| **Pages:** | | | | |
| **Claims:** | | | | |
| **Miscellaneous-Filing:** | | | | |
| **Petition:** | | | | |
| **Patent-Appeals-and-Interference:** | | | | |
| **Post-Allowance-and-Post-Issuance:** | | | | |
| **Extension-of-Time:** | | | | |

| Description | Fee Code | Quantity | Amount | Sub-Total in USD($) |
|---|---|---|---|---|
| **Miscellaneous:** | | | | |
| STATUTORY OR TERMINAL DISCLAIMER | 2814 | 2 | 160 | 320 |
| | | **Total in USD ($)** | | **320** |

# Electronic Acknowledgement Receipt

| | |
|---|---|
| **EFS ID:** | 32199338 |
| **Application Number:** | 15095137 |
| **International Application Number:** | |
| **Confirmation Number:** | 5317 |
| **Title of Invention:** | SYSTEM AND METHOD FOR PERFORMING HIGH-SPEED COMMUNICATIONS OVER FIBER OPTICAL NETWORKS |
| **First Named Inventor/Applicant Name:** | Alexander Soto |
| **Customer Number:** | 93749 |
| **Filer:** | Alexander Ivan Soto |
| **Filer Authorized By:** | |
| **Attorney Docket Number:** | UBI-002D |
| **Receipt Date:** | 29-MAR-2018 |
| **Filing Date:** | 10-APR-2016 |
| **Time Stamp:** | 16:07:57 |
| **Application Type:** | Utility under 35 USC 111(a) |

## Payment information:

| | |
|---|---|
| Submitted with Payment | yes |
| Payment Type | CARD |
| Payment was successfully received in RAM | $320 |
| RAM confirmation Number | 033018INTEFSW16091700 |
| Deposit Account | |
| Authorized User | |

The Director of the USPTO is hereby authorized to charge indicated fees and credit any overpayment as follows:

## File Listing:

| Document Number | Document Description | File Name | File Size(Bytes)/ Message Digest | Multi Part /.zip | Pages (if appl.) |
|---|---|---|---|---|---|
| 1 | Terminal Disclaimer Filed | UBI-002D_TD_ais.pdf | 159647<br>08e863940aba6a5478e9979db183a8312aee2816 | no | 2 |
| **Warnings:** | | | | | |
| **Information:** | | | | | |
| 2 | Terminal Disclaimer Filed | UBI-002D_TD_wgs.pdf | 159514<br>04892685b8e0502921b8becaf47dcef5de99da3e | no | 2 |
| **Warnings:** | | | | | |
| **Information:** | | | | | |
| 3 | Fee Worksheet (SB06) | fee-info.pdf | 30531<br>a3e02781d91b9e5ba81c15c8a2ac64d2b71d122f | no | 2 |
| **Warnings:** | | | | | |
| **Information:** | | | | | |
| | | **Total Files Size (in bytes):** | 349692 | | |

**This Acknowledgement Receipt evidences receipt on the noted date by the USPTO of the indicated documents, characterized by the applicant, and including page counts, where applicable. It serves as evidence of receipt similar to a Post Card, as described in MPEP 503.**

**<u>New Applications Under 35 U.S.C. 111</u>**
**If a new application is being filed and the application includes the necessary components for a filing date (see 37 CFR 1.53(b)-(d) and MPEP 506), a Filing Receipt (37 CFR 1.54) will be issued in due course and the date shown on this Acknowledgement Receipt will establish the filing date of the application.**
**<u>National Stage of an International Application under 35 U.S.C. 371</u>**
**If a timely submission to enter the national stage of an international application is compliant with the conditions of 35 U.S.C. 371 and other applicable requirements a Form PCT/DO/EO/903 indicating acceptance of the application as a national stage submission under 35 U.S.C. 371 will be issued in addition to the Filing Receipt, in due course.**
**<u>New International Application Filed with the USPTO as a Receiving Office</u>**
**If a new international application is being filed and the international application includes the necessary components for an international filing date (see PCT Article 11 and MPEP 1810), a Notification of the International Application Number and of the International Filing Date (Form PCT/RO/105) will be issued in due course, subject to prescriptions concerning national security, and the date shown on this Acknowledgement Receipt will establish the international filing date of the application.**

UNITED STATES PATENT AND TRADEMARK OFFICE

UNITED STATES DEPARTMENT OF COMMERCE
United States Patent and Trademark Office
Address: COMMISSIONER FOR PATENTS
P.O. Box 1450
Alexandria, Virginia 22313-1450
www.uspto.gov

| APPLICATION NO. | ISSUE DATE | PATENT NO. | ATTORNEY DOCKET NO. | CONFIRMATION NO. |
|---|---|---|---|---|
| 15/095,137 | 02/06/2018 | 9887795 | UBI-002D | 5317 |

93749 7590 01/17/2018

Alexander Soto
7673 Hazard Center Dr.
San Diego, CA 92108

# ISSUE NOTIFICATION

The projected patent number and issue date are specified above.

**Determination of Patent Term Adjustment under 35 U.S.C. 154 (b)**
(application filed on or after May 29, 2000)

The Patent Term Adjustment is 0 day(s). Any patent to issue from the above-identified application will include an indication of the adjustment on the front page.

If a Continued Prosecution Application (CPA) was filed in the above-identified application, the filing date that determines Patent Term Adjustment is the filing date of the most recent CPA.

Applicant will be able to obtain more detailed information by accessing the Patent Application Information Retrieval (PAIR) WEB site (http://pair.uspto.gov).

Any questions regarding the Patent Term Extension or Adjustment determination should be directed to the Office of Patent Legal Administration at (571)-272-7702. Questions relating to issue and publication fee payments should be directed to the Application Assistance Unit (AAU) of the Office of Data Management (ODM) at (571)-272-4200.

APPLICANT(s) (Please see PAIR WEB site http://pair.uspto.gov for additional applicants):

Alexander Soto, San Diego, CA;
Walter Soto, San Clemente, CA;

The United States represents the largest, most dynamic marketplace in the world and is an unparalleled location for business investment, innovation, and commercialization of new technologies. The USA offers tremendous resources and advantages for those who invest and manufacture goods here. Through SelectUSA, our nation works to encourage and facilitate business investment. To learn more about why the USA is the best country in the world to develop technology, manufacture products, and grow your business, visit SelectUSA.gov.

# PART B - FEE(S) TRANSMITTAL

**Complete and send this form, together with applicable fee(s), to: Mail** **Mail Stop ISSUE FEE**
**Commissioner for Patents**
**P.O. Box 1450**
**Alexandria, Virginia 22313-1450**
**or Fax (571)-273-2885**

INSTRUCTIONS: This form should be used for transmitting the ISSUE FEE and PUBLICATION FEE (if required). Blocks 1 through 5 should be completed where appropriate. All further correspondence including the Patent, advance orders and notification of maintenance fees will be mailed to the current correspondence address as indicated unless corrected below or directed otherwise in Block 1, by (a) specifying a new correspondence address; and/or (b) indicating a separate "FEE ADDRESS" for maintenance fee notifications.

CURRENT CORRESPONDENCE ADDRESS (Note: Use Block 1 for any change of address)

93749 3500 09/27/2017
Alexander Soto
7673 Hazard Center Dr.
San Diego, CA 92108

Note: A certificate of mailing can only be used for domestic mailings of the Fee(s) Transmittal. This certificate cannot be used for any other accompanying papers. Each additional paper, such as an assignment or formal drawing, must have its own certificate of mailing or transmission.

**Certificate of Mailing or Transmission**
I hereby certify that this Fee(s) Transmittal is being deposited with the United States Postal Service with sufficient postage for first class mail in an envelope addressed to the Mail Stop ISSUE FEE address above, or being facsimile transmitted to the USPTO (571) 273-2885, on the date indicated below.

(Depositor's name)
(Signature)
(Date)

| APPLICATION NO. | FILING DATE | FIRST NAMED INVENTOR | ATTORNEY DOCKET NO. | CONFIRMATION NO. |
|---|---|---|---|---|
| 15/095,137 | 04/10/2016 | Alexander Soto | UBI-002D | 5317 |

TITLE OF INVENTION: SYSTEM AND METHOD FOR PERFORMING HIGH-SPEED COMMUNICATIONS OVER FIBER OPTICAL NETWORKS

| APPLN TYPE | ENTITY STATUS | ISSUE FEE DUE | PUBLICATION FEE DUE | PREV. PAID ISSUE FEE | TOTAL FEE(S) DUE | DATE DUE |
|---|---|---|---|---|---|---|
| nonprovisional | SMALL | $480 | $0 | $0 | $480 | 12/27/2017 |

| EXAMINER | ART UNIT | CLASS-SUBCLASS |
|---|---|---|
| BELLO, AGUSTIN | 2637 | 398-079000 |

1. Change of correspondence address or indication of "Fee Address" (37 CFR 1.363).
- ☐ Change of correspondence address (or Change of Correspondence Address form PTO/SB/122) attached.
- ☐ "Fee Address" indication (or "Fee Address" Indication form PTO/SB/47; Rev 03-02 or more recent) attached. **Use of a Customer Number is required.**

2. For printing on the patent front page, list
(1) The names of up to 3 registered patent attorneys or agents OR, alternatively,
(2) The name of a single firm (having as a member a registered attorney or agent) and the names of up to 2 registered patent attorneys or agents. If no name is listed, no name will be printed.
1.
2.
3.

3. ASSIGNEE NAME AND RESIDENCE DATA TO BE PRINTED ON THE PATENT (print or type)
PLEASE NOTE: Unless an assignee is identified below, no assignee data will appear on the patent. If an assignee is identified below, the document has been filed for recordation as set forth in 37 CFR 3.11. Completion of this form is NOT a substitute for filing an assignment.
(A) NAME OF ASSIGNEE (B) RESIDENCE: (CITY and STATE OR COUNTRY)

Please check the appropriate assignee category or categories (will not be printed on the patent): ☐ Individual ☐ Corporation or other private group entity ☐ Government

4a. The following fee(s) are submitted:
- ☒ Issue Fee
- ☐ Publication Fee (No small entity discount permitted)
- ☐ Advance Order - # of Copies .....

4b. Payment of Fee(s): **(Please first reapply any previously paid issue fee shown above)**
- ☐ A check is enclosed.
- ☒ Payment by credit card. Form PTO-2038 is attached.
- ☐ The director is hereby authorized to charge the required fee(s), any deficiency, or credits any overpayment, to Deposit Account Number ..... (enclose an extra copy of this form).

5. **Change in Entity Status** (from status indicated above)
- ☐ Applicant certifying micro entity status. See 37 CFR 1.29 — NOTE: Absent a valid certification of Micro Entity Status (see forms PTO/SB/15A and 15B), issue fee payment in the micro entity amount will not be accepted at the risk of application abandonment.
- ☐ Applicant asserting small entity status. See 37 CFR 1.27 — NOTE: If the application was previously under micro entity status, checking this box will be taken to be a notification of loss of entitlement to micro entity status.
- ☐ Applicant changing to regular undiscounted fee status. — NOTE: Checking this box will be taken to be a notification of loss of entitlement to small or micro entity status, as applicable.

NOTE: This form must be signed in accordance with 37 CFR 1.31 and 1.33. See 37 CFR 1.4 for signature requirements and certifications.

Authorized Signature /Alexander Soto/ Date Dec. 25, 2017
Typed or printed name Alexander Soto Registration No. .....

Ex. 1024:46

# Electronic Patent Application Fee Transmittal

| | |
|---|---|
| **Application Number:** | 15095137 |
| **Filing Date:** | 10-Apr-2016 |
| **Title of Invention:** | SYSTEM AND METHOD FOR PERFORMING HIGH-SPEED COMMUNICATIONS OVER FIBER OPTICAL NETWORKS |
| **First Named Inventor/Applicant Name:** | Alexander Soto |
| **Filer:** | Alexander Ivan Soto |
| **Attorney Docket Number:** | UBI-002D |

Filed as Small Entity

**Filing Fees for Utility under 35 USC 111(a)**

| Description | Fee Code | Quantity | Amount | Sub-Total in USD($) |
|---|---|---|---|---|
| **Basic Filing:** | | | | |
| **Pages:** | | | | |
| **Claims:** | | | | |
| **Miscellaneous-Filing:** | | | | |
| **Petition:** | | | | |
| **Patent-Appeals-and-Interference:** | | | | |
| **Post-Allowance-and-Post-Issuance:** | | | | |
| UTILITY APPL ISSUE FEE | 2501 | 1 | 480 | 480 |

| Description | Fee Code | Quantity | Amount | Sub-Total in USD($) |
|---|---|---|---|---|
| **Extension-of-Time:** | | | | |
| **Miscellaneous:** | | | | |
| | | **Total in USD ($)** | | **480** |

# Electronic Acknowledgement Receipt

| | |
|---|---|
| **EFS ID:** | 31335820 |
| **Application Number:** | 15095137 |
| **International Application Number:** | |
| **Confirmation Number:** | 5317 |
| **Title of Invention:** | SYSTEM AND METHOD FOR PERFORMING HIGH-SPEED COMMUNICATIONS OVER FIBER OPTICAL NETWORKS |
| **First Named Inventor/Applicant Name:** | Alexander Soto |
| **Customer Number:** | 93749 |
| **Filer:** | Alexander Ivan Soto |
| **Filer Authorized By:** | |
| **Attorney Docket Number:** | UBI-002D |
| **Receipt Date:** | 26-DEC-2017 |
| **Filing Date:** | 10-APR-2016 |
| **Time Stamp:** | 16:38:55 |
| **Application Type:** | Utility under 35 USC 111(a) |

## Payment information:

| | |
|---|---|
| Submitted with Payment | yes |
| Payment Type | CARD |
| Payment was successfully received in RAM | $480 |
| RAM confirmation Number | 122717INTEFSW16402400 |
| Deposit Account | |
| Authorized User | |

The Director of the USPTO is hereby authorized to charge indicated fees and credit any overpayment as follows:

## File Listing:

| Document Number | Document Description | File Name | File Size(Bytes)/ Message Digest | Multi Part /.zip | Pages (if appl.) |
|---|---|---|---|---|---|
| 1 | Issue Fee Payment (PTO-85B) | UBI-002D_NOA_filing.pdf | 283993<br>bf46ad2acb49c9874343ae67d8bef45cfe4e8a3a | no | 1 |
| **Warnings:** | | | | | |
| **Information:** | | | | | |
| 2 | Fee Worksheet (SB06) | fee-info.pdf | 30665<br>d41723856c4e6f8a5d022cc8a8a6c49314747713 | no | 2 |
| **Warnings:** | | | | | |
| **Information:** | | | | | |
| | | **Total Files Size (in bytes):** | 314658 | | |

**This Acknowledgement Receipt evidences receipt on the noted date by the USPTO of the indicated documents, characterized by the applicant, and including page counts, where applicable. It serves as evidence of receipt similar to a Post Card, as described in MPEP 503.**

**<u>New Applications Under 35 U.S.C. 111</u>**
**If a new application is being filed and the application includes the necessary components for a filing date (see 37 CFR 1.53(b)-(d) and MPEP 506), a Filing Receipt (37 CFR 1.54) will be issued in due course and the date shown on this Acknowledgement Receipt will establish the filing date of the application.**
**<u>National Stage of an International Application under 35 U.S.C. 371</u>**
**If a timely submission to enter the national stage of an international application is compliant with the conditions of 35 U.S.C. 371 and other applicable requirements a Form PCT/DO/EO/903 indicating acceptance of the application as a national stage submission under 35 U.S.C. 371 will be issued in addition to the Filing Receipt, in due course.**
**<u>New International Application Filed with the USPTO as a Receiving Office</u>**
**If a new international application is being filed and the international application includes the necessary components for an international filing date (see PCT Article 11 and MPEP 1810), a Notification of the International Application Number and of the International Filing Date (Form PCT/RO/105) will be issued in due course, subject to prescriptions concerning national security, and the date shown on this Acknowledgement Receipt will establish the international filing date of the application.**

UNITED STATES PATENT AND TRADEMARK OFFICE

UNITED STATES DEPARTMENT OF COMMERCE
United States Patent and Trademark Office
Address: COMMISSIONER FOR PATENTS
P.O. Box 1450
Alexandria, Virginia 22313-1450
www.uspto.gov

| APPLICATION NUMBER | FILING OR 371(C) DATE | FIRST NAMED APPLICANT | ATTY. DOCKET NO./TITLE |
|---|---|---|---|
| 15/095,137 | 04/10/2016 | Alexander Soto | UBI-002D |

**CONFIRMATION NO. 5317**

**PUBLICATION NOTICE**

93749
Alexander Soto
7673 Hazard Center Dr.
San Diego, CA 92108

*OC000000095506596*

**Title:**SYSTEM AND METHOD FOR PERFORMING HIGH-SPEED COMMUNICATIONS OVER FIBER OPTICAL NETWORKS

**Publication No.**US-2017-0331579-A9
**Publication Date:**11/16/2017

## NOTICE OF PUBLICATION OF APPLICATION

The above-identified application will be electronically published as a patent application publication pursuant to 37 CFR 1.211, et seq. The patent application publication number and publication date are set forth above.

The publication may be accessed through the USPTO's publically available Searchable Databases via the Internet at www.uspto.gov. The direct link to access the publication is currently http://www.uspto.gov/patft/.

The publication process established by the Office does not provide for mailing a copy of the publication to applicant. A copy of the publication may be obtained from the Office upon payment of the appropriate fee set forth in 37 CFR 1.19(a)(1). Orders for copies of patent application publications are handled by the USPTO's Public Records Division. The Public Records Division can be reached by telephone at (571) 272-3150 or (800) 972-6382, by facsimile at (571) 273-3250, by mail addressed to the United States Patent and Trademark Office, Public Records Division, Alexandria, VA 22313-1450 or via the Internet.

In addition, information on the status of the application, including the mailing date of Office actions and the dates of receipt of correspondence filed in the Office, may also be accessed via the Internet through the Patent Electronic Business Center at www.uspto.gov using the public side of the Patent Application Information and Retrieval (PAIR) system. The direct link to access this status information is currently https://portal.uspto.gov/pair/PublicPair. Prior to publication, such status information is confidential and may only be obtained by applicant using the private side of PAIR.

Further assistance in electronically accessing the publication, or about PAIR, is available by calling the Patent Electronic Business Center at 1-866-217-9197.

---

Office of Data Managment, Application Assistance Unit (571) 272-4000, or (571) 272-4200, or 1-888-786-0101

| Index of Claims | Application/Control No. | Applicant(s)/Patent Under Reexamination |
|---|---|---|
| | 15095137 | SOTO ET AL. |
| | **Examiner** | **Art Unit** |
| | AGUSTIN BELLO | 2637 |

| | | | | | | | |
|---|---|---|---|---|---|---|---|
| ✓ | Rejected | - | Cancelled | N | Non-Elected | A | Appeal |
| = | Allowed | ÷ | Restricted | I | Interference | O | Objected |

☐ Claims renumbered in the same order as presented by applicant ☐ CPA ☐ T.D. ☐ R.1.47

| CLAIM | | DATE | | | | | | | | |
|---|---|---|---|---|---|---|---|---|---|---|
| Final | Original | 01/02/2017 | 04/29/2017 | 09/21/2017 | | | | | | |
| 1 | 1 | ✓ | ✓ | = | | | | | | |
| 2 | 2 | ✓ | ✓ | = | | | | | | |
| 5 | 3 | ✓ | ✓ | = | | | | | | |
| 7 | 4 | ✓ | ✓ | = | | | | | | |
| 9 | 5 | ✓ | ✓ | = | | | | | | |
| 6 | 6 | | ✓ | = | | | | | | |
| 8 | 7 | | ✓ | = | | | | | | |
| 3 | 8 | | ✓ | = | | | | | | |
| 4 | 9 | | ✓ | = | | | | | | |
| 10 | 10 | | ✓ | = | | | | | | |
| 11 | 11 | | ✓ | = | | | | | | |
| 12 | 12 | | ✓ | = | | | | | | |
| 13 | 13 | | ✓ | = | | | | | | |
| 14 | 14 | | ✓ | = | | | | | | |
| 15 | 15 | | ✓ | = | | | | | | |
| 16 | 16 | | ✓ | = | | | | | | |
| 17 | 17 | | ✓ | = | | | | | | |
| 18 | 18 | | ✓ | = | | | | | | |
| 19 | 19 | | ✓ | = | | | | | | |
| 20 | 20 | | ✓ | = | | | | | | |
| 21 | 21 | | ✓ | = | | | | | | |

| Issue Classification | Application/Control No. | Applicant(s)/Patent Under Reexamination |
|---|---|---|
| | 15095137 | SOTO ET AL. |
| | **Examiner** | **Art Unit** |
| | AGUSTIN BELLO | 2637 |

| CPC | | | | | | |
|---|---|---|---|---|---|---|
| **Symbol** | | | | | **Type** | **Version** |
| H04J | | 14 | / | 0221 | F | 2013-01-01 |
| H04B | | 10 | / | 40 | I | 2013-01-01 |
| H04J | | 14 | / | 02 | I | 2013-01-01 |
| H04J | | 14 | / | 0227 | A | 2013-01-01 |
| H04J | | 14 | / | 0282 | I | 2013-01-01 |
| H04J | | 14 | / | 0298 | I | 2013-01-01 |
| H04J | | 14 | / | 0256 | I | 2013-01-01 |
| H04J | | 14 | / | 0267 | I | 2013-01-01 |
| H04B | | 10 | / | 2507 | I | 2013-01-01 |
| H04B | | 10 | / | 2581 | I | 2013-01-01 |
| H04B | | 10 | / | 5161 | I | 2013-01-01 |
| | | | / | | | |
| | | | / | | | |
| | | | / | | | |
| | | | / | | | |

| CPC Combination Sets | | | | | | | | |
|---|---|---|---|---|---|---|---|---|
| **Symbol** | | | | | **Type** | **Set** | **Ranking** | **Version** |
| | | | / | | | | | |
| | | | / | | | | | |

| | | | |
|---|---|---|---|
| NONE<br><br>(Assistant Examiner) | (Date) | **Total Claims Allowed:**<br>21 | |
| /AGUSTIN BELLO/<br>Primary Examiner.Art Unit 2637<br><br>(Primary Examiner) | 09/21/2017<br><br>(Date) | O.G. Print Claim(s)<br>1 | O.G. Print Figure<br>3 |

| Issue Classification | Application/Control No. | Applicant(s)/Patent Under Reexamination |
|---|---|---|
| | 15095137 | SOTO ET AL. |
| | **Examiner** | **Art Unit** |
| | AGUSTIN BELLO | 2637 |

| US ORIGINAL CLASSIFICATION | | INTERNATIONAL CLASSIFICATION | | | | | | | | | |
|---|---|---|---|---|---|---|---|---|---|---|---|
| CLASS | SUBCLASS | CLAIMED | | | | | NON-CLAIMED | | | | |
| 398 | 135 | H | 0 | 4 | B | 10 / 00 (2013.0) | | | | | |

| CROSS REFERENCE(S) | | | | | |
|---|---|---|---|---|---|
| CLASS | SUBCLASS (ONE SUBCLASS PER BLOCK) | | | | |
| | | | | | |

| | | | |
|---|---|---|---|
| NONE<br><br>(Assistant Examiner) | (Date) | **Total Claims Allowed:**<br>21 | |
| /AGUSTIN BELLO/<br>Primary Examiner.Art Unit 2637<br><br>(Primary Examiner) | 09/21/2017<br><br>(Date) | O.G. Print Claim(s)<br>1 | O.G. Print Figure<br>3 |

| Issue Classification | Application/Control No. | Applicant(s)/Patent Under Reexamination |
|---|---|---|
| | 15095137 | SOTO ET AL. |
| | **Examiner** | **Art Unit** |
| | AGUSTIN BELLO | 2637 |

☐ Claims renumbered in the same order as presented by applicant ☐ CPA ☐ T.D. ☐ R.1.47

| Final | Original | Final | Original | Final | Original | Final | Original | Final | Original | Final | Original | Final | Original | Final | Original |
|---|---|---|---|---|---|---|---|---|---|---|---|---|---|---|---|
| 1 | 1 | 17 | 17 | | | | | | | | | | | | |
| 2 | 2 | 18 | 18 | | | | | | | | | | | | |
| 5 | 3 | 19 | 19 | | | | | | | | | | | | |
| 7 | 4 | 20 | 20 | | | | | | | | | | | | |
| 9 | 5 | 21 | 21 | | | | | | | | | | | | |
| 6 | 6 | | | | | | | | | | | | | | |
| 8 | 7 | | | | | | | | | | | | | | |
| 3 | 8 | | | | | | | | | | | | | | |
| 4 | 9 | | | | | | | | | | | | | | |
| 10 | 10 | | | | | | | | | | | | | | |
| 11 | 11 | | | | | | | | | | | | | | |
| 12 | 12 | | | | | | | | | | | | | | |
| 13 | 13 | | | | | | | | | | | | | | |
| 14 | 14 | | | | | | | | | | | | | | |
| 15 | 15 | | | | | | | | | | | | | | |
| 16 | 16 | | | | | | | | | | | | | | |

| | | | |
|---|---|---|---|
| NONE<br><br>(Assistant Examiner) | (Date) | **Total Claims Allowed:**<br>21 | |
| /AGUSTIN BELLO/<br>Primary Examiner.Art Unit 2637<br><br>(Primary Examiner) | 09/21/2017<br><br>(Date) | O.G. Print Claim(s)<br>1 | O.G. Print Figure<br>3 |

UNITED STATES PATENT AND TRADEMARK OFFICE

UNITED STATES DEPARTMENT OF COMMERCE
United States Patent and Trademark Office
Address: COMMISSIONER FOR PATENTS
P.O. Box 1450
Alexandria, Virginia 22313-1450
www.uspto.gov

# NOTICE OF ALLOWANCE AND FEE(S) DUE

93749 7590 09/27/2017
Alexander Soto
7673 Hazard Center Dr.
San Diego, CA 92108

| EXAMINER |
|---|
| BELLO, AGUSTIN |

| ART UNIT | PAPER NUMBER |
|---|---|
| 2637 | |

DATE MAILED: 09/27/2017

| APPLICATION NO. | FILING DATE | FIRST NAMED INVENTOR | ATTORNEY DOCKET NO. | CONFIRMATION NO. |
|---|---|---|---|---|
| 15/095,137 | 04/10/2016 | Alexander Soto | UBI-002D | 5317 |

TITLE OF INVENTION: SYSTEM AND METHOD FOR PERFORMING HIGH-SPEED COMMUNICATIONS OVER FIBER OPTICAL NETWORKS

| APPLN. TYPE | ENTITY STATUS | ISSUE FEE DUE | PUBLICATION FEE DUE | PREV. PAID ISSUE FEE | TOTAL FEE(S) DUE | DATE DUE |
|---|---|---|---|---|---|---|
| nonprovisional | SMALL | $480 | $0 | $0 | $480 | 12/27/2017 |

**THE APPLICATION IDENTIFIED ABOVE HAS BEEN EXAMINED AND IS ALLOWED FOR ISSUANCE AS A PATENT. PROSECUTION ON THE MERITS IS CLOSED. THIS NOTICE OF ALLOWANCE IS NOT A GRANT OF PATENT RIGHTS. THIS APPLICATION IS SUBJECT TO WITHDRAWAL FROM ISSUE AT THE INITIATIVE OF THE OFFICE OR UPON PETITION BY THE APPLICANT. SEE 37 CFR 1.313 AND MPEP 1308.**

**THE ISSUE FEE AND PUBLICATION FEE (IF REQUIRED) MUST BE PAID WITHIN THREE MONTHS FROM THE MAILING DATE OF THIS NOTICE OR THIS APPLICATION SHALL BE REGARDED AS ABANDONED. THIS STATUTORY PERIOD CANNOT BE EXTENDED. SEE 35 U.S.C. 151. THE ISSUE FEE DUE INDICATED ABOVE DOES NOT REFLECT A CREDIT FOR ANY PREVIOUSLY PAID ISSUE FEE IN THIS APPLICATION. IF AN ISSUE FEE HAS PREVIOUSLY BEEN PAID IN THIS APPLICATION (AS SHOWN ABOVE), THE RETURN OF PART B OF THIS FORM WILL BE CONSIDERED A REQUEST TO REAPPLY THE PREVIOUSLY PAID ISSUE FEE TOWARD THE ISSUE FEE NOW DUE.**

**HOW TO REPLY TO THIS NOTICE:**

I. Review the ENTITY STATUS shown above. If the ENTITY STATUS is shown as SMALL or MICRO, verify whether entitlement to that entity status still applies.

If the ENTITY STATUS is the same as shown above, pay the TOTAL FEE(S) DUE shown above.

If the ENTITY STATUS is changed from that shown above, on PART B - FEE(S) TRANSMITTAL, complete section number 5 titled "Change in Entity Status (from status indicated above)".

For purposes of this notice, small entity fees are 1/2 the amount of undiscounted fees, and micro entity fees are 1/2 the amount of small entity fees.

II. PART B - FEE(S) TRANSMITTAL, or its equivalent, must be completed and returned to the United States Patent and Trademark Office (USPTO) with your ISSUE FEE and PUBLICATION FEE (if required). If you are charging the fee(s) to your deposit account, section "4b" of Part B - Fee(s) Transmittal should be completed and an extra copy of the form should be submitted. If an equivalent of Part B is filed, a request to reapply a previously paid issue fee must be clearly made, and delays in processing may occur due to the difficulty in recognizing the paper as an equivalent of Part B.

III. All communications regarding this application must give the application number. Please direct all communications prior to issuance to Mail Stop ISSUE FEE unless advised to the contrary.

**IMPORTANT REMINDER: Utility patents issuing on applications filed on or after Dec. 12, 1980 may require payment of maintenance fees. It is patentee's responsibility to ensure timely payment of maintenance fees when due.**

# PART B - FEE(S) TRANSMITTAL

**Complete and send this form, together with applicable fee(s), to: Mail** **Mail Stop ISSUE FEE**
**Commissioner for Patents**
**P.O. Box 1450**
**Alexandria, Virginia 22313-1450**
**or Fax (571)-273-2885**

INSTRUCTIONS: This form should be used for transmitting the ISSUE FEE and PUBLICATION FEE (if required). Blocks 1 through 5 should be completed where appropriate. All further correspondence including the Patent, advance orders and notification of maintenance fees will be mailed to the current correspondence address as indicated unless corrected below or directed otherwise in Block 1, by (a) specifying a new correspondence address; and/or (b) indicating a separate "FEE ADDRESS" for maintenance fee notifications.

CURRENT CORRESPONDENCE ADDRESS (Note: Use Block 1 for any change of address)

93749 7590 09/27/2017
Alexander Soto
7673 Hazard Center Dr.
San Diego, CA 92108

Note: A certificate of mailing can only be used for domestic mailings of the Fee(s) Transmittal. This certificate cannot be used for any other accompanying papers. Each additional paper, such as an assignment or formal drawing, must have its own certificate of mailing or transmission.

**Certificate of Mailing or Transmission**
I hereby certify that this Fee(s) Transmittal is being deposited with the United States Postal Service with sufficient postage for first class mail in an envelope addressed to the Mail Stop ISSUE FEE address above, or being facsimile transmitted to the USPTO (571) 273-2885, on the date indicated below.

(Depositor's name)
(Signature)
(Date)

| APPLICATION NO. | FILING DATE | FIRST NAMED INVENTOR | ATTORNEY DOCKET NO. | CONFIRMATION NO. |
|---|---|---|---|---|
| 15/095,137 | 04/10/2016 | Alexander Soto | UBI-002D | 5317 |

TITLE OF INVENTION: SYSTEM AND METHOD FOR PERFORMING HIGH-SPEED COMMUNICATIONS OVER FIBER OPTICAL NETWORKS

| APPLN. TYPE | ENTITY STATUS | ISSUE FEE DUE | PUBLICATION FEE DUE | PREV. PAID ISSUE FEE | TOTAL FEE(S) DUE | DATE DUE |
|---|---|---|---|---|---|---|
| nonprovisional | SMALL | $480 | $0 | $0 | $480 | 12/27/2017 |

| EXAMINER | ART UNIT | CLASS-SUBCLASS |
|---|---|---|
| BELLO, AGUSTIN | 2637 | 398-079000 |

1. Change of correspondence address or indication of "Fee Address" (37 CFR 1.363).
- ❑ Change of correspondence address (or Change of Correspondence Address form PTO/SB/122) attached.
- ❑ "Fee Address" indication (or "Fee Address" Indication form PTO/SB/47; Rev 03-02 or more recent) attached. **Use of a Customer Number is required.**

2. For printing on the patent front page, list
(1) The names of up to 3 registered patent attorneys or agents OR, alternatively,
(2) The name of a single firm (having as a member a registered attorney or agent) and the names of up to 2 registered patent attorneys or agents. If no name is listed, no name will be printed.

1_____
2_____
3_____

3. ASSIGNEE NAME AND RESIDENCE DATA TO BE PRINTED ON THE PATENT (print or type)

PLEASE NOTE: Unless an assignee is identified below, no assignee data will appear on the patent. If an assignee is identified below, the document has been filed for recordation as set forth in 37 CFR 3.11. Completion of this form is NOT a substitute for filing an assignment.

(A) NAME OF ASSIGNEE (B) RESIDENCE: (CITY and STATE OR COUNTRY)

Please check the appropriate assignee category or categories (will not be printed on the patent) : ❑ Individual ❑ Corporation or other private group entity ❑ Government

4a. The following fee(s) are submitted:
- ❑ Issue Fee
- ❑ Publication Fee (No small entity discount permitted)
- ❑ Advance Order - # of Copies _____

4b. Payment of Fee(s): **(Please first reapply any previously paid issue fee shown above)**
- ❑ A check is enclosed.
- ❑ Payment by credit card. Form PTO-2038 is attached.
- ❑ The director is hereby authorized to charge the required fee(s), any deficiency, or credits any overpayment, to Deposit Account Number _____ (enclose an extra copy of this form).

5. **Change in Entity Status** (from status indicated above)
- ❑ Applicant certifying micro entity status. See 37 CFR 1.29 — NOTE: Absent a valid certification of Micro Entity Status (see forms PTO/SB/15A and 15B), issue fee payment in the micro entity amount will not be accepted at the risk of application abandonment.
- ❑ Applicant asserting small entity status. See 37 CFR 1.27 — NOTE: If the application was previously under micro entity status, checking this box will be taken to be a notification of loss of entitlement to micro entity status.
- ❑ Applicant changing to regular undiscounted fee status. — NOTE: Checking this box will be taken to be a notification of loss of entitlement to small or micro entity status, as applicable.

NOTE: This form must be signed in accordance with 37 CFR 1.31 and 1.33. See 37 CFR 1.4 for signature requirements and certifications.

Authorized Signature _____ Date _____

Typed or printed name _____ Registration No. _____

Ex. 1024.57



PTOL-85 Part B (10-13) Approved for use through 10/31/2013. OMB 0651-0033 U.S. Patent and Trademark Office; U.S. DEPARTMENT OF COMMERCE

UNITED STATES PATENT AND TRADEMARK OFFICE

UNITED STATES DEPARTMENT OF COMMERCE
United States Patent and Trademark Office
Address: COMMISSIONER FOR PATENTS
P.O. Box 1450
Alexandria, Virginia 22313-1450
www.uspto.gov

| APPLICATION NO. | FILING DATE | FIRST NAMED INVENTOR | ATTORNEY DOCKET NO. | CONFIRMATION NO. |
|---|---|---|---|---|
| 15/095,137 | 04/10/2016 | Alexander Soto | UBI-002D | 5317 |

93749 7590 09/27/2017
Alexander Soto
7673 Hazard Center Dr.
San Diego, CA 92108

| EXAMINER |
|---|
| BELLO, AGUSTIN |

| ART UNIT | PAPER NUMBER |
|---|---|
| 2637 | |

DATE MAILED: 09/27/2017

**Determination of Patent Term Adjustment under 35 U.S.C. 154 (b)**
(Applications filed on or after May 29, 2000)

The Office has discontinued providing a Patent Term Adjustment (PTA) calculation with the Notice of Allowance.

Section 1(h)(2) of the AIA Technical Corrections Act amended 35 U.S.C. 154(b)(3)(B)(i) to eliminate the requirement that the Office provide a patent term adjustment determination with the notice of allowance. See Revisions to Patent Term Adjustment, 78 Fed. Reg. 19416, 19417 (Apr. 1, 2013). Therefore, the Office is no longer providing an initial patent term adjustment determination with the notice of allowance. The Office will continue to provide a patent term adjustment determination with the Issue Notification Letter that is mailed to applicant approximately three weeks prior to the issue date of the patent, and will include the patent term adjustment on the patent. Any request for reconsideration of the patent term adjustment determination (or reinstatement of patent term adjustment) should follow the process outlined in 37 CFR 1.705.

Any questions regarding the Patent Term Extension or Adjustment determination should be directed to the Office of Patent Legal Administration at (571)-272-7702. Questions relating to issue and publication fee payments should be directed to the Customer Service Center of the Office of Patent Publication at 1-(888)-786-0101 or (571)-272-4200.



Ex. 1024.58

PTOL-85 (Rev. 02/11)

## OMB Clearance and PRA Burden Statement for PTOL-85 Part B

The Paperwork Reduction Act (PRA) of 1995 requires Federal agencies to obtain Office of Management and Budget approval before requesting most types of information from the public. When OMB approves an agency request to collect information from the public, OMB (i) provides a valid OMB Control Number and expiration date for the agency to display on the instrument that will be used to collect the information and (ii) requires the agency to inform the public about the OMB Control Number's legal significance in accordance with 5 CFR 1320.5(b).

The information collected by PTOL-85 Part B is required by 37 CFR 1.311. The information is required to obtain or retain a benefit by the public which is to file (and by the USPTO to process) an application. Confidentiality is governed by 35 U.S.C. 122 and 37 CFR 1.14. This collection is estimated to take 12 minutes to complete, including gathering, preparing, and submitting the completed application form to the USPTO. Time will vary depending upon the individual case. Any comments on the amount of time you require to complete this form and/or suggestions for reducing this burden, should be sent to the Chief Information Officer, U.S. Patent and Trademark Office, U.S. Department of Commerce, P.O. Box 1450, Alexandria, Virginia 22313-1450. DO NOT SEND FEES OR COMPLETED FORMS TO THIS ADDRESS. SEND TO: Commissioner for Patents, P.O. Box 1450, Alexandria, Virginia 22313-1450. Under the Paperwork Reduction Act of 1995, no persons are required to respond to a collection of information unless it displays a valid OMB control number.

## Privacy Act Statement

**The Privacy Act of 1974 (P.L. 93-579)** requires that you be given certain information in connection with your submission of the attached form related to a patent application or patent. Accordingly, pursuant to the requirements of the Act, please be advised that: (1) the general authority for the collection of this information is 35 U.S.C. 2(b)(2); (2) furnishing of the information solicited is voluntary; and (3) the principal purpose for which the information is used by the U.S. Patent and Trademark Office is to process and/or examine your submission related to a patent application or patent. If you do not furnish the requested information, the U.S. Patent and Trademark Office may not be able to process and/or examine your submission, which may result in termination of proceedings or abandonment of the application or expiration of the patent.

The information provided by you in this form will be subject to the following routine uses:

1. The information on this form will be treated confidentially to the extent allowed under the Freedom of Information Act (5 U.S.C. 552) and the Privacy Act (5 U.S.C 552a). Records from this system of records may be disclosed to the Department of Justice to determine whether disclosure of these records is required by the Freedom of Information Act.
2. A record from this system of records may be disclosed, as a routine use, in the course of presenting evidence to a court, magistrate, or administrative tribunal, including disclosures to opposing counsel in the course of settlement negotiations.
3. A record in this system of records may be disclosed, as a routine use, to a Member of Congress submitting a request involving an individual, to whom the record pertains, when the individual has requested assistance from the Member with respect to the subject matter of the record.
4. A record in this system of records may be disclosed, as a routine use, to a contractor of the Agency having need for the information in order to perform a contract. Recipients of information shall be required to comply with the requirements of the Privacy Act of 1974, as amended, pursuant to 5 U.S.C. 552a(m).
5. A record related to an International Application filed under the Patent Cooperation Treaty in this system of records may be disclosed, as a routine use, to the International Bureau of the World Intellectual Property Organization, pursuant to the Patent Cooperation Treaty.
6. A record in this system of records may be disclosed, as a routine use, to another federal agency for purposes of National Security review (35 U.S.C. 181) and for review pursuant to the Atomic Energy Act (42 U.S.C. 218(c)).
7. A record from this system of records may be disclosed, as a routine use, to the Administrator, General Services, or his/her designee, during an inspection of records conducted by GSA as part of that agency's responsibility to recommend improvements in records management practices and programs, under authority of 44 U.S.C. 2904 and 2906. Such disclosure shall be made in accordance with the GSA regulations governing inspection of records for this purpose, and any other relevant (i.e., GSA or Commerce) directive. Such disclosure shall not be used to make determinations about individuals.
8. A record from this system of records may be disclosed, as a routine use, to the public after either publication of the application pursuant to 35 U.S.C. 122(b) or issuance of a patent pursuant to 35 U.S.C. 151. Further, a record may be disclosed, subject to the limitations of 37 CFR 1.14, as a routine use, to the public if the record was filed in an application which became abandoned or in which the proceedings were terminated and which application is referenced by either a published application, an application open to public inspection or an issued patent.
9. A record from this system of records may be disclosed, as a routine use, to a Federal, State, or local law enforcement agency, if the USPTO becomes aware of a violation or potential violation of law or regulation.

| Notice of Allowability | Application No. 15/095,137 | Applicant(s) SOTO ET AL. | |
|---|---|---|---|
| | Examiner AGUSTIN BELLO | Art Unit 2637 | AIA (First Inventor to File) Status No |

***-- The MAILING DATE of this communication appears on the cover sheet with the correspondence address--***

All claims being allowable, PROSECUTION ON THE MERITS IS (OR REMAINS) CLOSED in this application. If not included herewith (or previously mailed), a Notice of Allowance (PTOL-85) or other appropriate communication will be mailed in due course. **THIS NOTICE OF ALLOWABILITY IS NOT A GRANT OF PATENT RIGHTS.** This application is subject to withdrawal from issue at the initiative of the Office or upon petition by the applicant. See 37 CFR 1.313 and MPEP 1308.

1. ☒ This communication is responsive to *the amendment filed 09/04/17*.
   ☐ A declaration(s)/affidavit(s) under **37 CFR 1.130(b)** was/were filed on_____.
2. ☐ An election was made by the applicant in response to a restriction requirement set forth during the interview on _____; the restriction requirement and election have been incorporated into this action.
3. ☒ The allowed claim(s) is/are *1-21*. As a result of the allowed claim(s), you may be eligible to benefit from the **Patent Prosecution Highway** program at a participating intellectual property office for the corresponding application. For more information, please see http://www.uspto.gov/patents/init_events/pph/index.jsp or send an inquiry to PPHfeedback@uspto.gov.
4. ☐ Acknowledgment is made of a claim for foreign priority under 35 U.S.C. § 119(a)-(d) or (f).

   **Certified copies:**

   a) ☐ All b) ☐ Some *c) ☐ None of the:
   1. ☐ Certified copies of the priority documents have been received.
   2. ☐ Certified copies of the priority documents have been received in Application No. _____ .
   3. ☐ Copies of the certified copies of the priority documents have been received in this national stage application from the International Bureau (PCT Rule 17.2(a)).

   * Certified copies not received: _____.

Applicant has THREE MONTHS FROM THE "MAILING DATE" of this communication to file a reply complying with the requirements noted below. Failure to timely comply will result in ABANDONMENT of this application.
**THIS THREE-MONTH PERIOD IS NOT EXTENDABLE**.

5. ☐ CORRECTED DRAWINGS ( as "replacement sheets") must be submitted.
   ☐ including changes required by the attached Examiner's Amendment / Comment or in the Office action of Paper No./Mail Date _____.

   **Identifying indicia such as the application number (see 37 CFR 1.84(c)) should be written on the drawings in the front (not the back) of each sheet. Replacement sheet(s) should be labeled as such in the header according to 37 CFR 1.121(d).**
6. ☐ DEPOSIT OF and/or INFORMATION about the deposit of BIOLOGICAL MATERIAL must be submitted. Note the attached Examiner's comment regarding REQUIREMENT FOR THE DEPOSIT OF BIOLOGICAL MATERIAL.

**Attachment(s)**

1. ☐ Notice of References Cited (PTO-892)
2. ☒ Information Disclosure Statements (PTO/SB/08), Paper No./Mail Date 09/04/17
3. ☐ Examiner's Comment Regarding Requirement for Deposit of Biological Material
4. ☐ Interview Summary (PTO-413), Paper No./Mail Date _____ .
5. ☐ Examiner's Amendment/Comment
6. ☐ Examiner's Statement of Reasons for Allowance
7. ☐ Other _____.

/AGUSTIN BELLO/
Primary Examiner, Art Unit 2637



**Ex. 1024.60**

PTO/SB/08b (07-09)
Approved for use through 07/31/2016. OMB 0651-0031
U.S. Patent and Trademark Office; U.S. DEPARTMENT OF COMMERCE
Under the Paperwork Reduction Act of 1995, no persons are required to respond to a collection of information unless it contains a valid OMB control number.

Substitute for form 1449/PTO

# INFORMATION DISCLOSURE STATEMENT BY APPLICANT

*(Use as many sheets as necessary)*

Sheet 1 of 1

| *Complete if Known* | |
|---|---|
| **Application Number** | 15/095,137 |
| **Filing Date** | April 10, 2016 |
| **First Named Inventor** | Alexander Soto |
| Art Unit | 2637 |
| Examiner Name | Bello, Agustin |
| Attorney Docket Number | UBI-002D |

**NON PATENT LITERATURE DOCUMENTS**

| Examiner Initials* | Cite No.[1] | Include name of the author (in CAPITAL LETTERS), title of the article (when appropriate), title of the item (book, magazine, journal, serial, symposium, catalog, etc.), date, page(s), volume-issue number(s), publisher, city and/or country where published. | T[2] |
|---|---|---|---|
| | | ADC Telecommunications, "Homeworx HFC Access Platform DS1 Host Digital Terminal Installation Manual", February 2000. | |
| | | AMP Schematic, "Plug Assembly, 64 Position, Self-Retained, Action Pin, Champ-Lok", Sep. 28, 2001. | |
| | | Small Form-Factor Plugg... (n.d.) In Wikipedia. Retrieved on 09/4/2017 from https://en.wikipedia.org/w/index.php?title=Small_form-factor_pluggable_transceiver&oldid=794217295 | |
| | | | |
| | | | |
| | | | |
| | | | |
| | | | |
| | | | |
| | | | |

| Examiner Signature | /AGUSTIN BELLO/ (09/21/2017) | Date Considered | 09/21/2017 |
|---|---|---|---|

*EXAMINER: Initial if reference considered, whether or not citation is in conformance with MPEP 609. Draw line through citation if not in conformance and not considered. Include copy of this form with next communication to applicant.

[1] Applicant's unique citation designation number (optional). [2] Applicant is to place a check mark here if English language Translation is attached.

This collection of information is required by 37 CFR 1.98. The information is required to obtain or retain a benefit by the public which is to file (and by the USPTO to process) an application. Confidentiality is governed by 35 U.S.C. 122 and 37 CFR 1.14. This collection is estimated to take 2 hours to complete, including gathering, preparing, and submitting the completed application form to the USPTO. Time will vary depending upon the individual case. Any comments on the amount of time you require to complete this form and/or suggestions for reducing this burden, should be sent to the Chief Information Officer, U.S. Patent and Trademark Office, P.O. Box 1450, Alexandria, VA 22313-1450. DO NOT SEND FEES OR COMPLETED FORMS TO THIS ADDRESS. **SEND TO: Commissioner for Patents, P.O. Box 1450, Alexandria, VA 22313-1450.**

*If you need assistance in completing the form, call 1-800-PTO-9199 (1-800-786-9199) and select option 2.*



ALL REFERENCES CONSIDERED EXCEPT WHERE LINED THROUGH. /A.B./

# Privacy Act Statement

The **Privacy Act of 1974 (P.L. 93-579)** requires that you be given certain information in connection with your submission of the attached form related to a patent application or patent. Accordingly, pursuant to the requirements of the Act, please be advised that: (1) the general authority for the collection of this information is 35 U.S.C. 2(b)(2); (2) furnishing of the information solicited is voluntary; and (3) the principal purpose for which the information is used by the U.S. Patent and Trademark Office is to process and/or examine your submission related to a patent application or patent. If you do not furnish the requested information, the U.S. Patent and Trademark Office may not be able to process and/or examine your submission, which may result in termination of proceedings or abandonment of the application or expiration of the patent.

The information provided by you in this form will be subject to the following routine uses:

1. The information on this form will be treated confidentially to the extent allowed under the Freedom of Information Act (5 U.S.C. 552) and the Privacy Act (5 U.S.C 552a). Records from this system of records may be disclosed to the Department of Justice to determine whether disclosure of these records is required by the Freedom of Information Act.
2. A record from this system of records may be disclosed, as a routine use, in the course of presenting evidence to a court, magistrate, or administrative tribunal, including disclosures to opposing counsel in the course of settlement negotiations.
3. A record in this system of records may be disclosed, as a routine use, to a Member of Congress submitting a request involving an individual, to whom the record pertains, when the individual has requested assistance from the Member with respect to the subject matter of the record.
4. A record in this system of records may be disclosed, as a routine use, to a contractor of the Agency having need for the information in order to perform a contract. Recipients of information shall be required to comply with the requirements of the Privacy Act of 1974, as amended, pursuant to 5 U.S.C. 552a(m).
5. A record related to an International Application filed under the Patent Cooperation Treaty in this system of records may be disclosed, as a routine use, to the International Bureau of the World Intellectual Property Organization, pursuant to the Patent Cooperation Treaty.
6. A record in this system of records may be disclosed, as a routine use, to another federal agency for purposes of National Security review (35 U.S.C. 181) and for review pursuant to the Atomic Energy Act (42 U.S.C. 218(c)).
7. A record from this system of records may be disclosed, as a routine use, to the Administrator, General Services, or his/her designee, during an inspection of records conducted by GSA as part of that agency's responsibility to recommend improvements in records management practices and programs, under authority of 44 U.S.C. 2904 and 2906. Such disclosure shall be made in accordance with the GSA regulations governing inspection of records for this purpose, and any other relevant (*i.e.*, GSA or Commerce) directive. Such disclosure shall not be used to make determinations about individuals.
8. A record from this system of records may be disclosed, as a routine use, to the public after either publication of the application pursuant to 35 U.S.C. 122(b) or issuance of a patent pursuant to 35 U.S.C. 151. Further, a record may be disclosed, subject to the limitations of 37 CFR 1.14, as a routine use, to the public if the record was filed in an application which became abandoned or in which the proceedings were terminated and which application is referenced by either a published application, an application open to public inspection or an issued patent.
9. A record from this system of records may be disclosed, as a routine use, to a Federal, State, or local law enforcement agency, if the USPTO becomes aware of a violation or potential violation of law or regulation.



ALL REFERENCES CONSIDERED EXCEPT WHERE LINED THROUGH. /A.B./

| Issue Classification | Application/Control No. | Applicant(s)/Patent Under Reexamination |
|---|---|---|
| | 15095137 | SOTO ET AL. |
| | **Examiner** | **Art Unit** |
| | AGUSTIN BELLO | 2637 |

**CPC**

| Symbol | | | | | Type | Version |
|---|---|---|---|---|---|---|
| H04J | | 14 | / | 0221 | F | 2013-01-01 |
| H04B | | 10 | / | 40 | I | 2013-01-01 |
| H04J | | 14 | / | 02 | I | 2013-01-01 |
| H04J | | 14 | / | 0227 | A | 2013-01-01 |
| H04J | | 14 | / | 0282 | I | 2013-01-01 |
| H04J | | 14 | / | 0298 | I | 2013-01-01 |
| H04J | | 14 | / | 0256 | I | 2013-01-01 |
| H04J | | 14 | / | 0267 | I | 2013-01-01 |
| H04B | | 10 | / | 2507 | I | 2013-01-01 |
| H04B | | 10 | / | 2581 | I | 2013-01-01 |
| H04B | | 10 | / | 5161 | I | 2013-01-01 |
| | | | / | | | |
| | | | / | | | |
| | | | / | | | |
| | | | / | | | |

**CPC Combination Sets**

| Symbol | | | | | Type | Set | Ranking | Version |
|---|---|---|---|---|---|---|---|---|
| | | | / | | | | | |
| | | | / | | | | | |

| | | | |
|---|---|---|---|
| NONE<br><br>(Assistant Examiner) | (Date) | **Total Claims Allowed:**<br>21 | |
| /AGUSTIN BELLO/<br>Primary Examiner.Art Unit 2637<br><br>(Primary Examiner) | 09/21/2017<br><br>(Date) | O.G. Print Claim(s)<br>1 | O.G. Print Figure<br>3 |

| Issue Classification | Application/Control No. | Applicant(s)/Patent Under Reexamination |
|---|---|---|
| | 15095137 | SOTO ET AL. |
| | **Examiner** | **Art Unit** |
| | AGUSTIN BELLO | 2637 |

| US ORIGINAL CLASSIFICATION | | INTERNATIONAL CLASSIFICATION | | | | | | | | | |
|---|---|---|---|---|---|---|---|---|---|---|---|
| CLASS | SUBCLASS | CLAIMED | | | | | NON-CLAIMED | | | | |
| 398 | 135 | H | 0 | 4 | B | 10 / 00 (2013.01.01) | | | | | |

| CROSS REFERENCE(S) | | | | | |
|---|---|---|---|---|---|
| CLASS | SUBCLASS (ONE SUBCLASS PER BLOCK) | | | | |
| | | | | | |
| | | | | | |
| | | | | | |
| | | | | | |
| | | | | | |
| | | | | | |
| | | | | | |
| | | | | | |
| | | | | | |
| | | | | | |
| | | | | | |
| | | | | | |
| | | | | | |

| NONE | | Total Claims Allowed: | |
|---|---|---|---|
| (Assistant Examiner) | (Date) | 21 | |
| /AGUSTIN BELLO/<br>Primary Examiner.Art Unit 2637 | 09/21/2017 | O.G. Print Claim(s) | O.G. Print Figure |
| (Primary Examiner) | (Date) | 1 | 3 |

| Issue Classification | Application/Control No. | Applicant(s)/Patent Under Reexamination |
|---|---|---|
| | 15095137 | SOTO ET AL. |
| | **Examiner** | **Art Unit** |
| | AGUSTIN BELLO | 2637 |

☒ **Claims renumbered in the same order as presented by applicant** ☐ **CPA** ☐ **T.D.** ☐ **R.1.47**

| Final | Original | Final | Original | Final | Original | Final | Original | Final | Original | Final | Original | Final | Original | Final | Original |
|---|---|---|---|---|---|---|---|---|---|---|---|---|---|---|---|
| | | | | | | | | | | | | | | | |
| | | | | | | | | | | | | | | | |
| | | | | | | | | | | | | | | | |
| | | | | | | | | | | | | | | | |
| | | | | | | | | | | | | | | | |
| | | | | | | | | | | | | | | | |
| | | | | | | | | | | | | | | | |
| | | | | | | | | | | | | | | | |
| | | | | | | | | | | | | | | | |
| | | | | | | | | | | | | | | | |
| | | | | | | | | | | | | | | | |
| | | | | | | | | | | | | | | | |
| | | | | | | | | | | | | | | | |
| | | | | | | | | | | | | | | | |
| | | | | | | | | | | | | | | | |
| | | | | | | | | | | | | | | | |

| | | | |
|---|---|---|---|
| NONE<br><br>(Assistant Examiner) | (Date) | **Total Claims Allowed:**<br>21 | |
| /AGUSTIN BELLO/<br>Primary Examiner.Art Unit 2637<br><br>(Primary Examiner) | 09/21/2017<br><br>(Date) | O.G. Print Claim(s)<br>1 | O.G. Print Figure<br>3 |

| Index of Claims | Application/Control No. | Applicant(s)/Patent Under Reexamination |
|---|---|---|
| | 15095137 | SOTO ET AL. |
| | **Examiner** | **Art Unit** |
| | AGUSTIN BELLO | 2637 |

| | | | | | | | |
|---|---|---|---|---|---|---|---|
| ✓ | Rejected | - | Cancelled | N | Non-Elected | A | Appeal |
| = | Allowed | ÷ | Restricted | I | Interference | O | Objected |

☐ Claims renumbered in the same order as presented by applicant ☐ CPA ☐ T.D. ☐ R.1.47

| CLAIM | | DATE | | | | | | | | |
|---|---|---|---|---|---|---|---|---|---|---|
| Final | Original | 01/02/2017 | 04/29/2017 | 09/21/2017 | | | | | | |
| | 1 | ✓ | ✓ | = | | | | | | |
| | 2 | ✓ | ✓ | = | | | | | | |
| | 3 | ✓ | ✓ | = | | | | | | |
| | 4 | ✓ | ✓ | = | | | | | | |
| | 5 | ✓ | ✓ | = | | | | | | |
| | 6 | | ✓ | = | | | | | | |
| | 7 | | ✓ | = | | | | | | |
| | 8 | | ✓ | = | | | | | | |
| | 9 | | ✓ | = | | | | | | |
| | 10 | | ✓ | = | | | | | | |
| | 11 | | ✓ | = | | | | | | |
| | 12 | | ✓ | = | | | | | | |
| | 13 | | ✓ | = | | | | | | |
| | 14 | | ✓ | = | | | | | | |
| | 15 | | ✓ | = | | | | | | |
| | 16 | | ✓ | = | | | | | | |
| | 17 | | ✓ | = | | | | | | |
| | 18 | | ✓ | = | | | | | | |
| | 19 | | ✓ | = | | | | | | |
| | 20 | | ✓ | = | | | | | | |
| | 21 | | ✓ | = | | | | | | |



Ex. 1024.66

| Search Notes | Application/Control No. | Applicant(s)/Patent Under Reexamination |
|---|---|---|
| | 15095137 | SOTO ET AL. |
| | **Examiner** | **Art Unit** |
| | AGUSTIN BELLO | 2637 |

| CPC- SEARCHED | | |
|---|---|---|
| **Symbol** | **Date** | **Examiner** |
| | | |

| CPC COMBINATION SETS - SEARCHED | | |
|---|---|---|
| **Symbol** | **Date** | **Examiner** |
| | | |

| US CLASSIFICATION SEARCHED | | | |
|---|---|---|---|
| **Class** | **Subclass** | **Date** | **Examiner** |
| 398 | 135-139 | 4/29/2017 | ab |

* See search history printout included with this form or the SEARCH NOTES box below to determine the scope of the search.

| SEARCH NOTES | | |
|---|---|---|
| **Search Notes** | **Date** | **Examiner** |
| "398"$.ccls. and (sfp sfp+ xfp xenpak xpa) | 1/2/2017 | ab |
| See EAST search history printout | 4/29/2017 | ab |

| INTERFERENCE SEARCH | | | |
|---|---|---|---|
| **US Class/ CPC Symbol** | **US Subclass / CPC Group** | **Date** | **Examiner** |
| 398 | 135-139 | 9/21/2017 | ab |

| | |
|---|---|
| | |

Ex. 1024.67

| | |
|---|---|
| **PATENTS**<br>**Docket No. UBI-002D** | |
| **IN THE UNITED STATES PATENT AND TRADEMARK OFFICE** | |
| In re Application of:<br>**Alexander I. Soto et al.** | Group Art Unit: **2637** |
| Patent Application No.: **15/095,137** | |
| Filed on: **April 10, 2016** | Examiner: Bello, Agustin |
| For: **System and Method for Performing High-Speed Communications Over Fiber Optical Networks** | |

Commissioner for Patents
Mail Stop Amendment
PO Box 1450
Alexandria, VA 22313-4150

**RESPONSE PER 37 C.F.R. §1.111**

Responsive to the Office Action mailed on May 4, 2017, please enter the following Response in the above-entitled Patent Application. Applicants respectfully request that the following remarks be considered, without prejudice or disclaimer to continued examination on the merits.

## REMARKS

**Introduction:** Applicants will file a terminal disclaimer as suggested to overcome the non-statuary double patenting rejections. Applicants respectfully request reconsideration and withdrawal of the rejections to claims 1-21 in consideration of Applicants' following remarks.

**Discussion regarding claims 1 and 3-5:** In the Office action mailed on May 4, 2017, the Office Action rejects claims 1 and 3-5 as being anticipated by Brede et al ("Brede") (US 6,603,822 B2). Additionally while not formally listed as rejected by Brede, claims 4, 6-7, 10, 13-16, 18, and 20-21 stand rejected for anticipation by Brede as well. Applicants respectfully traverse these rejections for at least the reason that they have not stated a proper *prima facie* case for anticipation for at least the reasons laid out below.

In the Applicants response of April 5, 2017, Applicants noted the lack of explicit rational for the conflation between Applicants' claimed pluggable optical transceiver module with Brede's host digital terminal (HDT) as shown in Brede's Fig. 3. In the May 4, 2017 OA, the Examiner made the conflation explicit with the entirety of Brede's Fig. 3 and gave the reasoning for doing so in section 12, page 13 of this OA. Applicants respectfully disagree with the conflation as the reasoning behind the conflation is flawed, not a conflation one skilled in the arts would make and is in contradiction with the "pluggable" interpretation already made by the Examiner.

The word "pluggable" is an adjective form of the word "plug" which is a word that describes an object used to stop up a hole or aperture, to fill a gap. In the electronic arts, there are many interfaces that can be considered pluggable and generally follow the convention of describing the pluggable object with the attribute "male" and the suitable pluggable aperture with the attribute "female". It is important to note that the pluggable attribute of the interface does not generally extend to the equipment hosting the interface. For example, modern Televisions have pluggable audio/visual interfaces (e.g., HDMI) but TVs are not considered themselves as being pluggable. Another example is the Universal Serial Bus (USB) which can be considered pluggable and common to modern desktop computers, notebooks, smartphones, etc, however the pluggable attribute of the USB interface doesn't transfer and make the desktop computer, notebook or smartphone considered pluggable. If one were to attribute the desktop computer as

pluggable for having a USB port, then why not attribute the desk hosting the desktop computer as well? Similarly why not attribute pluggable to the building for hosting the now pluggable desk, or the Earth for hosting the now pluggable building or the Universe for hosting the now pluggable Earth. Such an extension of the pluggable attribute renders the attribute meaningless. Similarly the rational described in the OA in section 12, page 13 wherein the pluggable attribute of a network interface or a pluggable electrical power interface is given to the entirety of Brede's Fig. 3 is flawed as the entirety of Bede's Fig. 3 is not pluggable.

Referring now to ADC Telecommunication publication from February 2000 titled "Homeworx HFC Access Platform DS1 Host Digital Terminal Installation Manual" ("**ADC_1**") which describes Brede's Fig. 3 in more detail. The instructions to mount Brede's HDT 12 of Fig. 3 are described in section 3, beginning on page 4-3 and disclose that the HDT is a rack mounted unit that is securely mounted using eight screws to the metal frame of a shelf of a rack. The HDT specification table 2-2 on page 2-11 discloses the dimensions and weight of the HDT providing insight on the need to securely fasten the HDT 12. Furthermore, the network interface (i.e., 2x28 DSX-1 network interface, left side of Brede's Fig. 3) are two female 64-pin AMP Champ connectors (see ADC_1 Fig. 4-13 on page 4-16, section 2.5.6 on page 2-8 and section 8 on page 4-15). Referring now to AMP schematic that discloses the dimensions for one male 64 pin AMP champ connector as 98.43 mm x 15.62 mm x 12.12 mm. Referring now to the Wikipedia entry for "Small Form-Factor pluggable transceiver" which discloses the mechanic dimensions for an SFP and XFP on page 5, we see just one male 64 pin AMP champ connector is larger than an SFP or XFP let alone accounting for incorporation of the entirety of Brede's Fig. 3. Additionally, it should be noted the SFP electrical pin-out is also presented on page 5 and does not support Brede's network interface which is arranged as 28 serial bidirectional signals. Additionally it should be noted that Brede's optical transmitters 14 and optical receivers 16 are yet more rack mounted units that connect to the HDT 12 via coaxial cables 22, 28 respectively, and importantly that none of these references refer to the this entirety of rack mounted units as a pluggable optical transceiver, nor even just an optical transceiver as in the Examiner's interpretation, on the contrary these references teach away from this interpretation.

The Applicants have shown that the entirety of Brede's Fig. 3, while having apertures or gaps for a pluggable network interface (i.e., two female 64 pin AMP Champ connectors), the entirety is a collection of rack mounted units that collectively as a whole do not function to plug

into an aperture or gap and therefore not pluggable as suggested by the Examiner. Therefore, the association of a "pluggable" attribute to the entirety of Brede's Fig. 3 as suggested by the Examiner is not a reasonable interpretation that one someone with ordinary skill in the arts would make.

Referring now to section 4 of this OA on page 4, the Examiner establishes an interpretation of "pluggable" with reference to Gilliland et al ("Gilliland") (Pub. No. US 2002/0181895). This interpretation is consistent with the preceding arguments by the Applicants above for reasonable interpretation for "pluggable". Gilliland discloses optical transceiver modules that plug into and mate with host receptacles (see paragraphs [0003], [0009], [0020], and [0021]). Thus this interpretation of "pluggable" by the Examiner is inconsistent with the later "pluggable" interpretation in OA section 12, page 13. Furthermore, it should be noted that the Examiner's interpretation of Brede's Fig. 3 in its entirety as not just a pluggable optical transceiver module but even simply an optical transceiver module would render Gilliland as anticipated in view of the Examiner's later section 12 "pluggable" interpretation and the power supply units (PRWU) 60 of Brede's Fig. 3 which would read into Gilliland's claimed novelty of an optical module having variable voltage capability (i.e., PRWU 60). However, Gilliland issued as US 6,607,307 B2 and is evidence of what is considered an optical transceiver that is inconsistent with the Examiner's section 12 interpretation in regards to the conflation that forms the basis to rejection of Applicants' independent claim 1 as again Gilliland was found to be novel by another examiner yet using the Examiners reasoning Gilliland should be found anticipated by Brede.

In summary, Applicants have argued that the "pluggable" interpretation by the Examiner on the entirety of Brede's Fig. 3 is flawed. Applicants have provided references that demonstrate the "pluggable" interpretation is not one that someone skilled in the arts would make and that the later section 12 interpretation is inconsistent with the Examiner's earlier section 4 interpretation of "pluggable" in this OA. The Examiner's later section 12 argument, at best, seems to rely on limitations and colloquialisms of the English language and not on the prior art references themselves to establish anticipation. MPEP 2111 says that "***The broadest reasonable interpretation does not mean the broadest possible interpretation***" (emphasis added) and Applicants respectfully suggest the Examiner's interpretation of "pluggable" in section 12, page 13 of the OA is the later, the broadest possible interpretation (possible in the sense it could be put

into words). The broadest reasonable interpretation could be Bede's optical transmitter 14 and optical receiver 16 elements combined somehow as an optical transceiver that is pluggable via pluggable coaxial lines 22, 28 to the host data terminal (HDT) 12, and this interpretation does not infringe on Applicants claims. Therefore, for at least these reasons the Examiner has not stated a proper *prima facie* case for anticipation.

Applicants respectfully request reconsideration and withdrawal of rejections to claims 1, 3-7, 10, 13-16, 18 and 20-21.

**Discussion regarding claims 2, 8, and 9:** In the Office action mailed on May 4, 2017, the Office Action rejects claims 2, 8, and 9 as being unpatentable over by Brede et al and in further view of Sheth et al ("Sheth") (US 7,729,617). Applicants respectfully traverse these rejections for at least the reason that they have not stated a proper *prima facie* case for obviousness for at least the reasons laid out above in regards to claim 1 from which claims 2, 8 and 9 depend from and for at least the following reasons below.

The rejection states that Brede fails to teach a form factor, however findings in Sheth are evidence of this teaching of standardized pluggable form factors. However, the rejection fails to suggest explicitly or implicitly any similarities between the entirety of Brede's Fig. 3 comprising for example of a plurality of Coax Master Units, Shelf controller units, power supply units, and DS1Us with Sheth's references to MSA 300 pin, SFP and XFP form factors. For example, the motivation to combine seems to be in order to efficiently support a variety of client interfaces and data standards, however, Sheth fails to suggest the client interface or data standard that Brede supports, the 2-28 DSX-1 network interface which is integral to the design and function of Brede's Coax Master Units (CXMU) and DS1Us as suggested by Brede's Fig. 3. None of the form factors suggested by Sheth support such an interface, nor does the OA provided support for such. In a rejection under 35 U .S.C. § 103, an examiner bears the initial burden of establishing *prima facie* obviousness.

Alternatively, MPEP § 2143.01(V) states "[i]f proposed modification would render the prior art invention being modified unsatisfactory for its intended purpose, then there is **no suggestion or motivation** to make the proposed modification. *In re Gordon*, 733 F.2d 900, 221 USPQ 1125 (Fed. Cir. 1984)" (emphasis added). "If the proposed modification or combination of the prior art would change the principle of operation of the prior art invention being modified,

then the teachings of the references are **not sufficient** to render the claims *prima facie* obvious. *In re Ratti*, 270 F.2d 810, 123 USPQ 349 (CCPA 1959)" (emphasis added).

In the present case, the modification of Brede to conform to a form factor as suggested by the Examiner in view of Sheth and in view of Brede's 2-28 DSX-1 network interface would frustrated the purpose Brede's CTSU 54 and CXMU 56 elements and these elements are at the core of principal operation of Brede Fig. 3. A person of ordinary skill in the art would not have a reason to combine these features. Therefore, Applicant respectfully suggest for at least this reason alone that these rejections should be withdrawn.

Applicants respectfully request reconsideration and withdrawal of rejections to claims 2, 8 and 9.

**Discussion regarding claims 11-12, 17 and 19:** In the Office action mailed on May 4, 2017, the Office Action rejects claims 11-12, 17 and 19 as being unpatentable over by Brede et al and in further view of Official Notices. Applicants respectfully traverse these rejections for at least the reason that they have not stated a proper *prima facie* case for obviousness for at least the reasons laid out above in regards to claim 1 from which these claims depend and for at least the following reasons below.

MPEP § 2144.03(C)) The legal standard for applying Official Notice under MPEP § 2144.03 is rigorous, and Applicant respectfully submits that the present application of Official Notices fall short of meeting this high standard. Additionally, the rejections are silent on suggesting how Brede is modified to support the suggested teachings, nor are there explicitly reasons cited as to what design, budgetary or performance requirements someone skilled in the arts would be motivated to achieve which are necessary to establish a *prima facie* case of obviousness. Furthermore, because the rejections did not establish a *prima facie* case of obviousness, any rejection in a subsequent Office Action providing adequate reasoning(s) would be presented for the first time on the record and as such a subsequent Office Action cannot be made final.

Alternatively, at best these rejections seem to say no more than that a skilled artisan, once presented with these Official Notices would have understood that they *could* be combined somehow. And that is not enough: it does not imply a motivation to pick out these references and combine them to arrive at Applicants' claim. See Belden Inc. v. Berk-Tek LLC, 805 F .3d

1064, 1073 (Fed. Cir. 2015) "[O]bviousness concerns whether a skilled artisan not only *could have* made but *would have* been motivated to make the combinations or modifications of prior art to arrive at the claimed invention."; InTouch Techs., Inc. v. VGO Communications, Inc., 751 F.3d 1327, 1352 (Fed. Cir. 2014). Accordingly, Applicants' respectfully submit that the rejections are improper and respectfully suggest that the rejections should be withdrawn.

Applicants respectfully request reconsideration and withdrawal of rejections to claims 11-12, 17, and 19.

**Conclusion**: In view of all the above, Applicants respectfully submits that certain clear and distinct differences as discussed exist between the present invention as now claimed and the prior art as a whole. These differences are more than sufficient that the present invention as now claimed would not have been anticipated nor rendered obvious given the prior art. Rather the present invention as a whole is distinguishable, and thereby allowable over the prior art.

Should the Examiner believe that a telephone conference with the undersigned would assist in resolving any issues pertaining to the allowability of the above-identified application, please contact the undersigned at the telephone number listed below.

Respectfully submitted,

/Alexander Soto/

Alexander Soto
Customer No. 93749
7673 Hazard Center Dr.
San Diego, CA 92108
858-527-2397
Alexander.I.Soto@gmail.com

# Electronic Patent Application Fee Transmittal

| | |
|---|---|
| **Application Number:** | 15095137 |
| **Filing Date:** | 10-Apr-2016 |
| **Title of Invention:** | SYSTEM AND METHOD FOR PERFORMING HIGH-SPEED COMMUNICATIONS OVER FIBER OPTICAL NETWORKS |
| **First Named Inventor/Applicant Name:** | Alexander Soto |
| **Filer:** | Alexander Ivan Soto |
| **Attorney Docket Number:** | UBI-002D |

Filed as Small Entity

**Filing Fees for Utility under 35 USC 111(a)**

| Description | Fee Code | Quantity | Amount | Sub-Total in USD($) |
|---|---|---|---|---|
| **Basic Filing:** | | | | |
| **Pages:** | | | | |
| **Claims:** | | | | |
| **Miscellaneous-Filing:** | | | | |
| **Petition:** | | | | |
| **Patent-Appeals-and-Interference:** | | | | |
| **Post-Allowance-and-Post-Issuance:** | | | | |
| **Extension-of-Time:** | | | | |

| Description | Fee Code | Quantity | Amount | Sub-Total in USD($) |
|---|---|---|---|---|
| Extension - 1 month with $0 paid | 2251 | 1 | 100 | 100 |
| **Miscellaneous:** | | | | |
| | | | **Total in USD ($)** | **100** |

# Electronic Acknowledgement Receipt

| | |
|---|---|
| **EFS ID:** | 30261729 |
| **Application Number:** | 15095137 |
| **International Application Number:** | |
| **Confirmation Number:** | 5317 |
| **Title of Invention:** | SYSTEM AND METHOD FOR PERFORMING HIGH-SPEED COMMUNICATIONS OVER FIBER OPTICAL NETWORKS |
| **First Named Inventor/Applicant Name:** | Alexander Soto |
| **Customer Number:** | 93749 |
| **Filer:** | Alexander Ivan Soto |
| **Filer Authorized By:** | |
| **Attorney Docket Number:** | UBI-002D |
| **Receipt Date:** | 04-SEP-2017 |
| **Filing Date:** | 10-APR-2016 |
| **Time Stamp:** | 23:10:53 |
| **Application Type:** | Utility under 35 USC 111(a) |

## Payment information:

| | |
|---|---|
| Submitted with Payment | yes |
| Payment Type | CARD |
| Payment was successfully received in RAM | $100 |
| RAM confirmation Number | 090517INTEFSW23123500 |
| Deposit Account | |
| Authorized User | |

The Director of the USPTO is hereby authorized to charge indicated fees and credit any overpayment as follows:

## File Listing:

| Document Number | Document Description | File Name | File Size(Bytes)/ Message Digest | Multi Part /.zip | Pages (if appl.) |
|---|---|---|---|---|---|
| 1 | Information Disclosure Statement (IDS) Form (SB08) | UBI-002D_IDS_09_04_2017.pdf | 257661<br>6062d1f25d6e4dfba13e1a6f50defb2e811d004d | no | 2 |
| **Warnings:** | | | | | |
| **Information:** | | | | | |
| This is not an USPTO supplied IDS fillable form | | | | | |
| 2 | Terminal Disclaimer Filed | UBI-002D_TD_ais.pdf | 159647<br>08e863940aba6a5478e9979db183a8312aee2816 | no | 2 |
| **Warnings:** | | | | | |
| **Information:** | | | | | |
| 3 | Terminal Disclaimer Filed | UBI-002D_TD_wgs.pdf | 159514<br>04892685b8e0502921b8becaf47dcef5de99da3e | no | 2 |
| **Warnings:** | | | | | |
| **Information:** | | | | | |
| 4 | Non Patent Literature | AMP_Champ_schematic_uspto.pdf | 129855<br>43945aba54d503b09c5f52a11888f45b8504ec68 | no | 1 |
| **Warnings:** | | | | | |
| **Information:** | | | | | |
| 5 | Non Patent Literature | Small-form-factor_pluggable_transceiver-Wikipedia_uspto.pdf | 290976<br>3fdbc7f0b0bf8f6de51099a9ad769491b09bb505 | no | 8 |
| **Warnings:** | | | | | |
| **Information:** | | | | | |
| 6 | Non Patent Literature | ADC_Telecom_1_uspto_reduced.pdf | 25749551<br>70d63f650b19c1d43a07156bad3658de017e8184 | no | 93 |
| **Warnings:** | | | | | |

| | | | | | |
|---|---|---|---|---|---|
| **Information:** | | | | | |
| 7 | Amendment/Req. Reconsideration-After Non-Final Reject | UBI-002D-1st_OA_Response_after_RCE_08_2_2017.pdf | 138549<br>c3a5c243e7f565a498bd1067ba4fc8cb1255d2d6 | no | 7 |
| **Warnings:** | | | | | |
| **Information:** | | | | | |
| 8 | Fee Worksheet (SB06) | fee-info.pdf | 30591<br>b1977c4e312af6ed32c4248b182ecc4f36f961f5 | no | 2 |
| **Warnings:** | | | | | |
| **Information:** | | | | | |
| | | | **Total Files Size (in bytes):** | 26916344 | |

**This Acknowledgement Receipt evidences receipt on the noted date by the USPTO of the indicated documents, characterized by the applicant, and including page counts, where applicable. It serves as evidence of receipt similar to a Post Card, as described in MPEP 503.**

**<u>New Applications Under 35 U.S.C. 111</u>**
**If a new application is being filed and the application includes the necessary components for a filing date (see 37 CFR 1.53(b)-(d) and MPEP 506), a Filing Receipt (37 CFR 1.54) will be issued in due course and the date shown on this Acknowledgement Receipt will establish the filing date of the application.**
**<u>National Stage of an International Application under 35 U.S.C. 371</u>**
**If a timely submission to enter the national stage of an international application is compliant with the conditions of 35 U.S.C. 371 and other applicable requirements a Form PCT/DO/EO/903 indicating acceptance of the application as a national stage submission under 35 U.S.C. 371 will be issued in addition to the Filing Receipt, in due course.**
**<u>New International Application Filed with the USPTO as a Receiving Office</u>**
**If a new international application is being filed and the international application includes the necessary components for an international filing date (see PCT Article 11 and MPEP 1810), a Notification of the International Application Number and of the International Filing Date (Form PCT/RO/105) will be issued in due course, subject to prescriptions concerning national security, and the date shown on this Acknowledgement Receipt will establish the international filing date of the application.**

PTO/SB/08b (07-09)
Approved for use through 07/31/2016. OMB 0651-0031
U.S. Patent and Trademark Office; U.S. DEPARTMENT OF COMMERCE
Under the Paperwork Reduction Act of 1995, no persons are required to respond to a collection of information unless it contains a valid OMB control number.

Substitute for form 1449/PTO

# INFORMATION DISCLOSURE STATEMENT BY APPLICANT

*(Use as many sheets as necessary)*

Sheet 1 of 1

| | Complete if Known |
|---|---|
| **Application Number** | 15/095,137 |
| **Filing Date** | April 10, 2016 |
| **First Named Inventor** | Alexander Soto |
| Art Unit | 2637 |
| Examiner Name | Bello, Agustin |
| Attorney Docket Number | UBI-002D |

**NON PATENT LITERATURE DOCUMENTS**

| Examiner Initials* | Cite No.[1] | Include name of the author (in CAPITAL LETTERS), title of the article (when appropriate), title of the item (book, magazine, journal, serial, symposium, catalog, etc.), date, page(s), volume-issue number(s), publisher, city and/or country where published. | T[2] |
|---|---|---|---|
| | | ADC Telecommunications, "Homeworx HFC Access Platform DS1 Host Digital Terminal Installation Manual", February 2000. | |
| | | AMP Schematic, "Plug Assembly, 64 Position, Self-Retained, Action Pin, Champ-Lok", Sep. 28, 2001. | |
| | | Small Form-Factor Plugg... (n.d.) In Wikipedia. Retrieved on 09/4/2017 from https://en.wikipedia.org/w/index.php?title=Small_form-factor_pluggable_transceiver&oldid=794217295 | |
| | | | |
| | | | |
| | | | |
| | | | |
| | | | |
| | | | |
| | | | |

| Examiner Signature | | Date Considered | |
|---|---|---|---|

*EXAMINER: Initial if reference considered, whether or not citation is in conformance with MPEP 609. Draw line through citation if not in conformance and not considered. Include copy of this form with next communication to applicant.

[1] Applicant's unique citation designation number (optional). [2] Applicant is to place a check mark here if English language Translation is attached.

This collection of information is required by 37 CFR 1.98. The information is required to obtain or retain a benefit by the public which is to file (and by the USPTO to process) an application. Confidentiality is governed by 35 U.S.C. 122 and 37 CFR 1.14. This collection is estimated to take 2 hours to complete, including gathering, preparing, and submitting the completed application form to the USPTO. Time will vary depending upon the individual case. Any comments on the amount of time you require to complete this form and/or suggestions for reducing this burden, should be sent to the Chief Information Officer, U.S. Patent and Trademark Office, P.O. Box 1450, Alexandria, VA 22313-1450. DO NOT SEND FEES OR COMPLETED FORMS TO THIS ADDRESS. **SEND TO: Commissioner for Patents, P.O. Box 1450, Alexandria, VA 22313-1450.**

*If you need assistance in completing the form, call 1-800-PTO-9199 (1-800-786-9199) and select option 2.*

# Privacy Act Statement

The **Privacy Act of 1974 (P.L. 93-579)** requires that you be given certain information in connection with your submission of the attached form related to a patent application or patent. Accordingly, pursuant to the requirements of the Act, please be advised that: (1) the general authority for the collection of this information is 35 U.S.C. 2(b)(2); (2) furnishing of the information solicited is voluntary; and (3) the principal purpose for which the information is used by the U.S. Patent and Trademark Office is to process and/or examine your submission related to a patent application or patent. If you do not furnish the requested information, the U.S. Patent and Trademark Office may not be able to process and/or examine your submission, which may result in termination of proceedings or abandonment of the application or expiration of the patent.

The information provided by you in this form will be subject to the following routine uses:

1. The information on this form will be treated confidentially to the extent allowed under the Freedom of Information Act (5 U.S.C. 552) and the Privacy Act (5 U.S.C 552a). Records from this system of records may be disclosed to the Department of Justice to determine whether disclosure of these records is required by the Freedom of Information Act.
2. A record from this system of records may be disclosed, as a routine use, in the course of presenting evidence to a court, magistrate, or administrative tribunal, including disclosures to opposing counsel in the course of settlement negotiations.
3. A record in this system of records may be disclosed, as a routine use, to a Member of Congress submitting a request involving an individual, to whom the record pertains, when the individual has requested assistance from the Member with respect to the subject matter of the record.
4. A record in this system of records may be disclosed, as a routine use, to a contractor of the Agency having need for the information in order to perform a contract. Recipients of information shall be required to comply with the requirements of the Privacy Act of 1974, as amended, pursuant to 5 U.S.C. 552a(m).
5. A record related to an International Application filed under the Patent Cooperation Treaty in this system of records may be disclosed, as a routine use, to the International Bureau of the World Intellectual Property Organization, pursuant to the Patent Cooperation Treaty.
6. A record in this system of records may be disclosed, as a routine use, to another federal agency for purposes of National Security review (35 U.S.C. 181) and for review pursuant to the Atomic Energy Act (42 U.S.C. 218(c)).
7. A record from this system of records may be disclosed, as a routine use, to the Administrator, General Services, or his/her designee, during an inspection of records conducted by GSA as part of that agency's responsibility to recommend improvements in records management practices and programs, under authority of 44 U.S.C. 2904 and 2906. Such disclosure shall be made in accordance with the GSA regulations governing inspection of records for this purpose, and any other relevant (*i.e.*, GSA or Commerce) directive. Such disclosure shall not be used to make determinations about individuals.
8. A record from this system of records may be disclosed, as a routine use, to the public after either publication of the application pursuant to 35 U.S.C. 122(b) or issuance of a patent pursuant to 35 U.S.C. 151. Further, a record may be disclosed, subject to the limitations of 37 CFR 1.14, as a routine use, to the public if the record was filed in an application which became abandoned or in which the proceedings were terminated and which application is referenced by either a published application, an application open to public inspection or an issued patent.
9. A record from this system of records may be disclosed, as a routine use, to a Federal, State, or local law enforcement agency, if the USPTO becomes aware of a violation or potential violation of law or regulation.

PTO/AIA/26 (04-14)
Approved for use through 07/31/2016. OMB 0651-0031
U.S. Patent and Trademark Office; U.S. DEPARTMENT OF COMMERCE
Under the Paperwork Reduction Act of 1995, no persons are required to respond to a collection of information unless it displays a valid OMB control number.

# TERMINAL DISCLAIMER TO OBVIATE A DOUBLE PATENTING REJECTION OVER A "PRIOR" PATENT

Docket Number (Optional)
UBI-002D

In re Application of: Alexander Soto and Walter Soto

Application No.: 15/095,137

Filed: April 10, 2016

For: System and Method for Performing High-Speed Communications Over Fiber Optical Networks

The applicant, Alexander Soto and Walter Soto, owner of 100 percent interest in the instant application hereby disclaims, except as provided below, the terminal part of the statutory term of any patent granted on the instant application which would extend beyond the expiration date of the full statutory term of **prior patent** No. 9,337,948 as the term of said **prior patent** is presently shortened by any terminal disclaimer. The applicant hereby agrees that any patent so granted on the instant application shall be enforceable only for and during such period that it and the **prior patent** are commonly owned. This agreement runs with any patent granted on the instant application and is binding upon the grantee, its successors or assigns.

In making the above disclaimer, the applicant does not disclaim the terminal part of the term of any patent granted on the instant application that would extend to the expiration date of the full statutory term of the **prior patent**, "as the term of said **prior patent** is presently shortened by any terminal disclaimer," in the event that said **prior patent** later:

expires for failure to pay a maintenance fee;
is held unenforceable;
is found invalid by a court of competent jurisdiction;
is statutorily disclaimed in whole or terminally disclaimed under 37 CFR 1.321;
has all claims canceled by a reexamination certificate;
is reissued; or
is in any manner terminated prior to the expiration of its full statutory term as presently shortened by any terminal disclaimer.

Check either box 1 or 2 below, if appropriate.

1. ☑ The undersigned is the applicant. If the applicant is an assignee, the undersigned is authorized to act on behalf of the assignee.

I hereby acknowledge that any willful false statements made are punishable under 18 U.S.C. 1001 by fine or imprisonment of not more than five (5) years, or both.

2. ☐ The undersigned is an attorney or agent of record. Reg. No._____

/Alexander Soto/ — Signature
Sept. 4, 2017 — Date

Alexander Soto
Typed or printed name

Title
Telephone Number

☐ Terminal disclaimer fee under 37 CFR 1.20(d) included.

**WARNING: Information on this form may become public. Credit card information should not be included on this form. Provide credit card information and authorization on PTO-2038.**

This collection of information is required by 37 CFR 1.321. The information is required to obtain or retain a benefit by the public which is to file (and by the USPTO to process) an application. Confidentiality is governed by 35 U.S.C. 122 and 37 CFR 1.11 and 1.14. This collection is estimated to take 12 minutes to complete, including gathering, preparing, and submitting the completed application form to the USPTO. Time will vary depending upon the individual case. Any comments on the amount of time you require to complete this form and/or suggestions for reducing this burden, should be sent to the Chief Information Officer, U.S. Patent and Trademark Office, U.S. Department of Commerce, P.O. Box 1450, Alexandria, VA 22313-1450. DO NOT SEND FEES OR COMPLETED FORMS TO THIS ADDRESS. **SEND TO: Commissioner for Patents, P.O. Box 1450, Alexandria, VA 22313-1450.**

If you need assistance in completing the form, call 1-800-PTO-9199 and select option 2.

# Privacy Act Statement

The **Privacy Act of 1974 (P.L. 93-579)** requires that you be given certain information in connection with your submission of the attached form related to a patent application or patent. Accordingly, pursuant to the requirements of the Act, please be advised that: (1) the general authority for the collection of this information is 35 U.S.C. 2(b)(2); (2) furnishing of the information solicited is voluntary; and (3) the principal purpose for which the information is used by the U.S. Patent and Trademark Office is to process and/or examine your submission related to a patent application or patent. If you do not furnish the requested information, the U.S. Patent and Trademark Office may not be able to process and/or examine your submission, which may result in termination of proceedings or abandonment of the application or expiration of the patent.

The information provided by you in this form will be subject to the following routine uses:

1. The information on this form will be treated confidentially to the extent allowed under the Freedom of Information Act (5 U.S.C. 552) and the Privacy Act (5 U.S.C 552a). Records from this system of records may be disclosed to the Department of Justice to determine whether disclosure of these records is required by the Freedom of Information Act.
2. A record from this system of records may be disclosed, as a routine use, in the course of presenting evidence to a court, magistrate, or administrative tribunal, including disclosures to opposing counsel in the course of settlement negotiations.
3. A record in this system of records may be disclosed, as a routine use, to a Member of Congress submitting a request involving an individual, to whom the record pertains, when the individual has requested assistance from the Member with respect to the subject matter of the record.
4. A record in this system of records may be disclosed, as a routine use, to a contractor of the Agency having need for the information in order to perform a contract. Recipients of information shall be required to comply with the requirements of the Privacy Act of 1974, as amended, pursuant to 5 U.S.C. 552a(m).
5. A record related to an International Application filed under the Patent Cooperation Treaty in this system of records may be disclosed, as a routine use, to the International Bureau of the World Intellectual Property Organization, pursuant to the Patent Cooperation Treaty.
6. A record in this system of records may be disclosed, as a routine use, to another federal agency for purposes of National Security review (35 U.S.C. 181) and for review pursuant to the Atomic Energy Act (42 U.S.C. 218(c)).
7. A record from this system of records may be disclosed, as a routine use, to the Administrator, General Services, or his/her designee, during an inspection of records conducted by GSA as part of that agency's responsibility to recommend improvements in records management practices and programs, under authority of 44 U.S.C. 2904 and 2906. Such disclosure shall be made in accordance with the GSA regulations governing inspection of records for this purpose, and any other relevant (*i.e.*, GSA or Commerce) directive. Such disclosure shall not be used to make determinations about individuals.
8. A record from this system of records may be disclosed, as a routine use, to the public after either publication of the application pursuant to 35 U.S.C. 122(b) or issuance of a patent pursuant to 35 U.S.C. 151. Further, a record may be disclosed, subject to the limitations of 37 CFR 1.14, as a routine use, to the public if the record was filed in an application which became abandoned or in which the proceedings were terminated and which application is referenced by either a published application, an application open to public inspection or an issued patent.
9. A record from this system of records may be disclosed, as a routine use, to a Federal, State, or local law enforcement agency, if the USPTO becomes aware of a violation or potential violation of law or regulation.

PTO/AIA/26 (04-14)
Approved for use through 07/31/2016. OMB 0651-0031
U.S. Patent and Trademark Office; U.S. DEPARTMENT OF COMMERCE
Under the Paperwork Reduction Act of 1995, no persons are required to respond to a collection of information unless it displays a valid OMB control number.

| TERMINAL DISCLAIMER TO OBVIATE A DOUBLE PATENTING REJECTION OVER A "PRIOR" PATENT | Docket Number (Optional) UBI-002D |
|---|---|

In re Application of: Alexander Soto and Walter Soto

Application No.: 15/095,137

Filed: April 10, 2016

For: System and Method for Performing High-Speed Communications Over Fiber Optical Networks

The applicant, Alexander Soto and Walter Soto, owner of 100 percent interest in the instant application hereby disclaims, except as provided below, the terminal part of the statutory term of any patent granted on the instant application which would extend beyond the expiration date of the full statutory term of **prior patent** No. 9,337,948 as the term of said **prior patent** is presently shortened by any terminal disclaimer. The applicant hereby agrees that any patent so granted on the instant application shall be enforceable only for and during such period that it and the **prior patent** are commonly owned. This agreement runs with any patent granted on the instant application and is binding upon the grantee, its successors or assigns.

In making the above disclaimer, the applicant does not disclaim the terminal part of the term of any patent granted on the instant application that would extend to the expiration date of the full statutory term of the **prior patent**, "as the term of said **prior patent** is presently shortened by any terminal disclaimer," in the event that said **prior patent** later:

expires for failure to pay a maintenance fee;
is held unenforceable;
is found invalid by a court of competent jurisdiction;
is statutorily disclaimed in whole or terminally disclaimed under 37 CFR 1.321;
has all claims canceled by a reexamination certificate;
is reissued; or
is in any manner terminated prior to the expiration of its full statutory term as presently shortened by any terminal disclaimer.

Check either box 1 or 2 below, if appropriate.

1. ☑ The undersigned is the applicant. If the applicant is an assignee, the undersigned is authorized to act on behalf of the assignee.

I hereby acknowledge that any willful false statements made are punishable under 18 U.S.C. 1001 by fine or imprisonment of not more than five (5) years, or both.

2. ☐ The undersigned is an attorney or agent of record. Reg. No._____

/Walter Soto/ — Signature
Sept. 4, 2017 — Date

Walter Soto
Typed or printed name

Title
Telephone Number

☐ Terminal disclaimer fee under 37 CFR 1.20(d) included.

**WARNING: Information on this form may become public. Credit card information should not be included on this form. Provide credit card information and authorization on PTO-2038.**

This collection of information is required by 37 CFR 1.321. The information is required to obtain or retain a benefit by the public which is to file (and by the USPTO to process) an application. Confidentiality is governed by 35 U.S.C. 122 and 37 CFR 1.11 and 1.14. This collection is estimated to take 12 minutes to complete, including gathering, preparing, and submitting the completed application form to the USPTO. Time will vary depending upon the individual case. Any comments on the amount of time you require to complete this form and/or suggestions for reducing this burden, should be sent to the Chief Information Officer, U.S. Patent and Trademark Office, U.S. Department of Commerce, P.O. Box 1450, Alexandria, VA 22313-1450. DO NOT SEND FEES OR COMPLETED FORMS TO THIS ADDRESS. **SEND TO: Commissioner for Patents, P.O. Box 1450, Alexandria, VA 22313-1450.**

If you need assistance in completing the form, call 1-800-PTO-9199 and select option 2.

# Privacy Act Statement

The **Privacy Act of 1974 (P.L. 93-579)** requires that you be given certain information in connection with your submission of the attached form related to a patent application or patent. Accordingly, pursuant to the requirements of the Act, please be advised that: (1) the general authority for the collection of this information is 35 U.S.C. 2(b)(2); (2) furnishing of the information solicited is voluntary; and (3) the principal purpose for which the information is used by the U.S. Patent and Trademark Office is to process and/or examine your submission related to a patent application or patent. If you do not furnish the requested information, the U.S. Patent and Trademark Office may not be able to process and/or examine your submission, which may result in termination of proceedings or abandonment of the application or expiration of the patent.

The information provided by you in this form will be subject to the following routine uses:

1. The information on this form will be treated confidentially to the extent allowed under the Freedom of Information Act (5 U.S.C. 552) and the Privacy Act (5 U.S.C 552a). Records from this system of records may be disclosed to the Department of Justice to determine whether disclosure of these records is required by the Freedom of Information Act.
2. A record from this system of records may be disclosed, as a routine use, in the course of presenting evidence to a court, magistrate, or administrative tribunal, including disclosures to opposing counsel in the course of settlement negotiations.
3. A record in this system of records may be disclosed, as a routine use, to a Member of Congress submitting a request involving an individual, to whom the record pertains, when the individual has requested assistance from the Member with respect to the subject matter of the record.
4. A record in this system of records may be disclosed, as a routine use, to a contractor of the Agency having need for the information in order to perform a contract. Recipients of information shall be required to comply with the requirements of the Privacy Act of 1974, as amended, pursuant to 5 U.S.C. 552a(m).
5. A record related to an International Application filed under the Patent Cooperation Treaty in this system of records may be disclosed, as a routine use, to the International Bureau of the World Intellectual Property Organization, pursuant to the Patent Cooperation Treaty.
6. A record in this system of records may be disclosed, as a routine use, to another federal agency for purposes of National Security review (35 U.S.C. 181) and for review pursuant to the Atomic Energy Act (42 U.S.C. 218(c)).
7. A record from this system of records may be disclosed, as a routine use, to the Administrator, General Services, or his/her designee, during an inspection of records conducted by GSA as part of that agency's responsibility to recommend improvements in records management practices and programs, under authority of 44 U.S.C. 2904 and 2906. Such disclosure shall be made in accordance with the GSA regulations governing inspection of records for this purpose, and any other relevant (*i.e.*, GSA or Commerce) directive. Such disclosure shall not be used to make determinations about individuals.
8. A record from this system of records may be disclosed, as a routine use, to the public after either publication of the application pursuant to 35 U.S.C. 122(b) or issuance of a patent pursuant to 35 U.S.C. 151. Further, a record may be disclosed, subject to the limitations of 37 CFR 1.14, as a routine use, to the public if the record was filed in an application which became abandoned or in which the proceedings were terminated and which application is referenced by either a published application, an application open to public inspection or an issued patent.
9. A record from this system of records may be disclosed, as a routine use, to a Federal, State, or local law enforcement agency, if the USPTO becomes aware of a violation or potential violation of law or regulation.

| Application Number | Application/Control No. | Applicant(s)/Patent under Reexamination | |
|---|---|---|---|
| | 15/095,137 | SOTO ET AL. | |
| | | | |

| Document Code - DISQ | Internal Document – DO NOT MAIL |
|---|---|

| TERMINAL DISCLAIMER | ☐ APPROVED | ☒ DISAPPROVED |
|---|---|---|
| Date Filed : 04 September, 2017 | This patent is subject to a Terminal Disclaimer | |

## Approved/Disapproved by:

CHARRISSA BROWN

**Technology Center:** PLRC

**Telephone:** (571)272-1558
2 TD's Disapproved.

The disclaimer fee under 37 CFR 1.20( d) in the amount of $320.00 has not been submitted, nor is there any pre authorization in the application to charge to a deposit account. (See FP 14.24 and 14.26.07.)

U.S. Patent and Trademark Office

UNITED STATES PATENT AND TRADEMARK OFFICE
COMMISSIONER FOR PATENTS
P.O.BOX 1450
ALEXANDRIA VA 22313-1451

PRESORTED
FIRST-CLASS MAIL
U.S. POSTAGE PAID
POSTEDIGITAL
NNNNN

Alexander Soto
7673 Hazard Center Dr.
San Diego, CA 92108

**Courtesy Reminder for**
**Application Serial No: 15/095,137**

Attorney Docket No: UBI-002D
Customer Number: 93749
Date of Electronic Notification: 08/11/2017

This is a courtesy reminder that new correspondence is available for this application. If you have not done so already, please review the correspondence. The official date of notification of the outgoing correspondence will be indicated on the form PTOL-90 accompanying the correspondence.

An email notification regarding the correspondence was sent to the following email address(es) associated with your customer number:
alexander.i.soto@gmail.com

To view your correspondence online or update your email addresses, please visit us anytime at **https://sportal.uspto.gov/secure/myportal/privatepair.** If you have any questions, please email the Electronic Business Center (EBC) at EBC@uspto.gov or call 1-866-217-9197.

UNITED STATES PATENT AND TRADEMARK OFFICE

UNITED STATES DEPARTMENT OF COMMERCE
United States Patent and Trademark Office
Address: COMMISSIONER FOR PATENTS
P.O. Box 1450
Alexandria, Virginia 22313-1450
www.uspto.gov

| APPLICATION NUMBER | FILING OR 371(C) DATE | FIRST NAMED APPLICANT | ATTY. DOCKET NO./TITLE |
|---|---|---|---|
| 15/095,137 | 04/10/2016 | Alexander Soto | UBI-002D |

**CONFIRMATION NO. 5317**

93749
Alexander Soto
7673 Hazard Center Dr.
San Diego, CA 92108

**PUB REQUEST ACCEPTANCE LETTER**

*OC000000093402108*

Date Mailed: 08/11/2017

## NOTICE OF ACCEPTANCE OF PUBLICATION REQUEST

The request for voluntary publication, amended publication, early publication, redacted publication, republication, corrected publication or revised publication has been received for this application. The request, including payment of any necessary fee(s), is in compliance with 37 CFR 1.215, 1.217, 1.219 or 1.221.

The projected publication date is 11/16/2017.

Questions about the contents of this notice and the requirements it sets forth should be directed to the Office of Data Management, Application Assistance Unit, at **(571) 272-4000** or **(571) 272-4200** or **1-888-786-0101**.

/npfarmer/



**Ex. 1024.88**

# Office of Petitions: Routing Sheet

4700

**Application No.** 15095137

**This application is being forwarded to your office for further processing. A decision has been rendered on a petition filed in this application, as indicated below. For details of this decision, please see the document PET.OP.DEC filed on the same date as this document.**

- [X] **GRANTED**
- [ ] **DISMISSED**
- [ ] **DENIED**

UNITED STATES PATENT AND TRADEMARK OFFICE

**UNITED STATES DEPARTMENT OF COMMERCE**
**United States Patent and Trademark Office**
Address: COMMISSIONER FOR PATENTS
P.O. Box 1450
Alexandria, Virginia 22313-1450
www.uspto.gov

| APPLICATION NO. | FILING DATE | FIRST NAMED INVENTOR | ATTORNEY DOCKET NO. | CONFIRMATION NO. |
|---|---|---|---|---|
| 15/095,137 | 04/10/2016 | Alexander Soto | UBI-002D | 5317 |

93749 7590 08/09/2017
Alexander Soto
7673 Hazard Center Dr.
San Diego, CA 92108

| EXAMINER |
|---|
| BELLO, AGUSTIN |

| ART UNIT | PAPER NUMBER |
|---|---|
| 2637 | |

| NOTIFICATION DATE | DELIVERY MODE |
|---|---|
| 08/09/2017 | ELECTRONIC |

**Please find below and/or attached an Office communication concerning this application or proceeding.**

The time period for reply, if any, is set in the attached communication.

Notice of the Office communication was sent electronically on above-indicated "Notification Date" to the following e-mail address(es):

alexander.i.soto@gmail.com

**Ex. 1024.90**

UNITED STATES PATENT AND TRADEMARK OFFICE

Commissioner for Patents
United States Patent and Trademark Office
P.O. Box 1450
Alexandria, VA 22313-1450
www.uspto.gov

| | | |
|---|---|---|
| In re Application of | : | |
| Soto et al. | : | |
| Application No. 15/095,137 | : | |
| Filed: April 10, 2016 | : | DECISION ON PETITION |
| Atty Docket No. UBI-002D | : | UNDER 37 CFR 1.78(c) and(e) |
| | : | |

This responds to the "PETITION FOR UNINTENTIONALLY DELAYED DOMESTIC BENEFIT CLAIM" filed June 1, 2017, to accept an unintentionally delayed claim for priority to the nonprovisional and provisional applications as set forth in the application data sheet filed June 1, 2017.

The petition under 37 CFR 1.78 is **GRANTED**.

This application was filed after March 16, 2013. The rules applicable to such applications are being applied in this case.

Effective December 18, 2013, 37 CFR 1.78(c) provides:

> Delayed claims under 35 U.S.C. 119(e) for the benefit of a prior-filed provisional application. If the reference required by 35 U.S.C. 119(e) and paragraph (a)(3) of this section is presented in a nonprovisional application after the time period provided by paragraph (a)(4) of this section, the claim under 35 U.S.C. 119(e) for the benefit of a prior-filed provisional application may be accepted if submitted during the pendency of the later-filed application and if the reference identifying the prior-filed application by provisional application number was unintentionally delayed. A petition to accept an unintentionally delayed claim under 35 U.S.C. 119(e) for the benefit of a prior-filed provisional application must be accompanied by:
>
> (1) The reference required by 35 U.S.C. 119(e) and paragraph (a)(3) of this section to the prior-filed provisional application, unless previously submitted;

(2) The petition fee set forth in § 1.17(m); and

(3) A statement that the entire delay between the date the benefit claim was due under paragraph (a)(4) of this section and the date the benefit claim was filed was unintentional. The Director may require additional information where there is a question whether the delay was unintentional.

Effective December 18, 2013, 37 CFR 1.78(e) provides:

*Delayed claims under 35 U.S.C. 120, 121, or 365(c) for the benefit of a prior-filed nonprovisional application or international application*. If the reference required by 35 U.S.C. 120 and paragraph (c)(2) of this section is presented after the time period provided by paragraph (c)(3) of this section, the claim under 35 U.S.C. 120, 121, or 365(c) for the benefit of a prior-filed copending nonprovisional application or international application designating the United States of America may be accepted if the reference identifying the prior-filed application by application number or international application number and international filing date was unintentionally delayed. A petition to accept an unintentionally delayed claim under 35 U.S.C. 120, 121, or 365(c) for the benefit of a prior-filed application must be accompanied by:

(1) The reference required by 35 U.S.C. 120 and paragraph (d)(2) of this section to the prior-filed application, unless previously submitted;
(2) The petition fee as set forth in § 1.17(m); and
(3) A statement that the entire delay between the date the benefit claim was due under paragraph (d)(3) of this section and the date the benefit claim was filed was unintentional. The Director may require additional information where there is a question whether the delay was unintentional.

Moreover, effective with patent applications filed under 35 U.S.C. 111(a) or 363 on or after September 16, 2012, claims for foreign priority under § 1.55 and claims for priority under § 1.78 must be set forth in an application data sheet. *Changes to Implement the Inventor's Oath or Declaration Provisions of the Leahy-Smith America Invents Act: Final Rule*, 77 Fed. Reg. 48776 (August 14, 2012). Claims for priority set forth in the specification are ineffective.

A review of the application as filed reveals that the application data sheet (ADS) submitted on filing did not properly set forth the claims for priority. The four and sixteen-month periods specified in 37 CFR §§ 1.78(a)(4) and (d)(3) expired without the submission of a compliant ADS containing the proper reference. Thus, the instant petition is appropriate. In addition, the petition includes the required statement of unintentional delay and the required petition fee.

On petition, a reference to the prior-filed nonprovisional and provisional applications has been included in an application data sheet.

The following requirement is met: Where an application claims a benefit under 35 U.S.C. 120, 121 or 365(c) of a chain of applications, the application must make a reference to the first (earliest) application and every intermediate application. See Sampson v. Ampex Corp., 463 F.2d 1042, 1044-45, 174 USPQ 417, 418-19 (2d Cir. 1972); Sticker Indus. Supply Corp. v. Blaw-Knox Co., 405 F.2d 90, 93, 160 USPQ 177, 179 (7th Cir. 1968); Hovlid v. Asari, 305 F.2d 747, 751, 134 USPQ 162, 165 (9th Cir. 1962); see also MPEP 201.11. In addition, every intermediate application must also make a reference to the first (earliest) application and every application after the first application and before such intermediate application. MPEP 201.06(b).

All of the above requirements having been satisfied, the late claim for benefit of priority to the prior-filed applications under 35 U.S.C. §§ 119(e) and 120 is accepted as being unintentionally delayed.

Petitioner is advised that this decision grants the petition to accept the unintentionally delayed domestic benefit claim to the prior filed application(s) because the petition requirements of 37 CFR 1.78(c) and (e) and the formal requirements for claiming domestic benefit (see MPEP 211.01 et. seq.) appear to have been met. This acceptance should not be construed as meaning that this application is entitled to the benefit of the prior-filed application(s). Whether a claimed invention in a nonprovisional application is entitled to the benefit of the filing date of a prior-filed application on the basis of the disclosure thereof is determined during examination if it becomes necessary to do so (e.g., intervening reference and interference proceeding). See MPEP 211.05.

A corrected Filing Receipt with the priority claim to the prior-filed applications is enclosed.

Any questions concerning this matter may be directed to the undersigned at (571) 272-3219. All other inquiries concerning either the examination procedures or status of the application should be directed to the Technology Center.

The application is being referred to Technology Center Art Unit 2637 for consideration by the examiner of the claim for benefit of priority under 35 U.S.C. §§119(e) and 120 of the prior-filed applications as set forth in the application data sheet filed June 1, 2017.

/Nancy Johnson/

Nancy Johnson
Attorney Advisor
Office of Petitions

ATTACHMENT: Corrected Filing Receipt

UNITED STATES PATENT AND TRADEMARK OFFICE

UNITED STATES DEPARTMENT OF COMMERCE
United States Patent and Trademark Office
Address: COMMISSIONER FOR PATENTS
P.O. Box 1450
Alexandria, Virginia 22313-1450
www.uspto.gov

| APPLICATION NUMBER | FILING or 371(c) DATE | GRP ART UNIT | FIL FEE REC'D | ATTY.DOCKET.NO | TOT CLAIMS | IND CLAIMS |
|---|---|---|---|---|---|---|
| 15/095,137 | 04/10/2016 | 2637 | 840 | UBI-002D | 5 | 1 |

**CONFIRMATION NO. 5317**

**CORRECTED FILING RECEIPT**

93749
Alexander Soto
7673 Hazard Center Dr.
San Diego, CA 92108

Date Mailed: 08/07/2017

Receipt is acknowledged of this non-provisional patent application. The application will be taken up for examination in due course. Applicant will be notified as to the results of the examination. Any correspondence concerning the application must include the following identification information: the U.S. APPLICATION NUMBER, FILING DATE, NAME OF APPLICANT, and TITLE OF INVENTION. Fees transmitted by check or draft are subject to collection. Please verify the accuracy of the data presented on this receipt. **If an error is noted on this Filing Receipt, please submit a written request for a Filing Receipt Correction. Please provide a copy of this Filing Receipt with the changes noted thereon. If you received a "Notice to File Missing Parts" for this application, please submit any corrections to this Filing Receipt with your reply to the Notice. When the USPTO processes the reply to the Notice, the USPTO will generate another Filing Receipt incorporating the requested corrections**

**Inventor(s)**

Alexander Soto, San Diego, CA;
Walter Soto, San Clemente, CA;

**Applicant(s)**

Alexander Soto, San Diego, CA;
Walter Soto, San Clemente, CA;

**Power of Attorney:** None

**Domestic Priority data as claimed by applicant**

This application is a CON of 12/512,968 07/30/2009 PAT 9337948
which is a CIP of 11/772,187 06/30/2007 ABN
which is a CON of 10/865,547 06/10/2004 PAT 7242868
which claims benefit of 60/477,845 06/10/2003
and claims benefit of 60/480,488 06/21/2003

**Foreign Applications** for which priority is claimed (You may be eligible to benefit from the **Patent Prosecution Highway** program at the USPTO. Please see http://www.uspto.gov for more information.) - None.
*Foreign application information must be provided in an Application Data Sheet in order to constitute a claim to foreign priority. See 37 CFR 1.55 and 1.76.*

**Permission to Access Application via Priority Document Exchange:** Yes

**Permission to Access Search Results:** Yes

Applicant may provide or rescind an authorization for access using Form PTO/SB/39 or Form PTO/SB/69 as appropriate.

**If Required, Foreign Filing License Granted:** 04/25/2016
The country code and number of your priority application, to be used for filing abroad under the Paris Convention, is **US 15/095,137**
**Projected Publication Date:** Not Applicable
**Non-Publication Request:** No
**Early Publication Request:** No
**** SMALL ENTITY ****
**Title**

SYSTEM AND METHOD FOR PERFORMING HIGH-SPEED COMMUNICATIONS OVER FIBER OPTICAL NETWORKS

**Preliminary Class**

398

**Statement under 37 CFR 1.55 or 1.78 for AIA (First Inventor to File) Transition Applications:** No

## PROTECTING YOUR INVENTION OUTSIDE THE UNITED STATES

Since the rights granted by a U.S. patent extend only throughout the territory of the United States and have no effect in a foreign country, an inventor who wishes patent protection in another country must apply for a patent in a specific country or in regional patent offices. Applicants may wish to consider the filing of an international application under the Patent Cooperation Treaty (PCT). An international (PCT) application generally has the same effect as a regular national patent application in each PCT-member country. The PCT process **simplifies** the filing of patent applications on the same invention in member countries, but **does not result** in a grant of "an international patent" and does not eliminate the need of applicants to file additional documents and fees in countries where patent protection is desired.

Almost every country has its own patent law, and a person desiring a patent in a particular country must make an application for patent in that country in accordance with its particular laws. Since the laws of many countries differ in various respects from the patent law of the United States, applicants are advised to seek guidance from specific foreign countries to ensure that patent rights are not lost prematurely.

Applicants also are advised that in the case of inventions made in the United States, the Director of the USPTO must issue a license before applicants can apply for a patent in a foreign country. The filing of a U.S. patent application serves as a request for a foreign filing license. The application's filing receipt contains further information and guidance as to the status of applicant's license for foreign filing.

Applicants may wish to consult the USPTO booklet, "General Information Concerning Patents" (specifically, the section entitled "Treaties and Foreign Patents") for more information on timeframes and deadlines for filing foreign patent applications. The guide is available either by contacting the USPTO Contact Center at 800-786-9199, or it can be viewed on the USPTO website at http://www.uspto.gov/web/offices/pac/doc/general/index.html.

For information on preventing theft of your intellectual property (patents, trademarks and copyrights), you may wish to consult the U.S. Government website, http://www.stopfakes.gov. Part of a Department of Commerce initiative, this website includes self-help "toolkits" giving innovators guidance on how to protect intellectual property in specific

countries such as China, Korea and Mexico. For questions regarding patent enforcement issues, applicants may call the U.S. Government hotline at 1-866-999-HALT (1-866-999-4258).

## LICENSE FOR FOREIGN FILING UNDER

## Title 35, United States Code, Section 184

## Title 37, Code of Federal Regulations, 5.11 & 5.15

**GRANTED**

The applicant has been granted a license under 35 U.S.C. 184, if the phrase "IF REQUIRED, FOREIGN FILING LICENSE GRANTED" followed by a date appears on this form. Such licenses are issued in all applications where the conditions for issuance of a license have been met, regardless of whether or not a license may be required as set forth in 37 CFR 5.15. The scope and limitations of this license are set forth in 37 CFR 5.15(a) unless an earlier license has been issued under 37 CFR 5.15(b). The license is subject to revocation upon written notification. The date indicated is the effective date of the license, unless an earlier license of similar scope has been granted under 37 CFR 5.13 or 5.14.

This license is to be retained by the licensee and may be used at any time on or after the effective date thereof unless it is revoked. This license is automatically transferred to any related applications(s) filed under 37 CFR 1.53(d). This license is not retroactive.

The grant of a license does not in any way lessen the responsibility of a licensee for the security of the subject matter as imposed by any Government contract or the provisions of existing laws relating to espionage and the national security or the export of technical data. Licensees should apprise themselves of current regulations especially with respect to certain countries, of other agencies, particularly the Office of Defense Trade Controls, Department of State (with respect to Arms, Munitions and Implements of War (22 CFR 121-128)); the Bureau of Industry and Security, Department of Commerce (15 CFR parts 730-774); the Office of Foreign AssetsControl, Department of Treasury (31 CFR Parts 500+) and the Department of Energy.

**NOT GRANTED**

No license under 35 U.S.C. 184 has been granted at this time, if the phrase "IF REQUIRED, FOREIGN FILING LICENSE GRANTED" DOES NOT appear on this form. Applicant may still petition for a license under 37 CFR 5.12, if a license is desired before the expiration of 6 months from the filing date of the application. If 6 months has lapsed from the filing date of this application and the licensee has not received any indication of a secrecy order under 35 U.S.C. 181, the licensee may foreign file the application pursuant to 37 CFR 5.15(b).

---

## *SelectUSA*

The United States represents the largest, most dynamic marketplace in the world and is an unparalleled location for business investment, innovation, and commercialization of new technologies. The U.S. offers tremendous resources and advantages for those who invest and manufacture goods here. Through SelectUSA, our nation works to promote and facilitate business investment. SelectUSA provides information assistance to the international investor community; serves as an ombudsman for existing and potential investors; advocates on behalf of U.S. cities, states, and regions competing for global investment; and counsels U.S. economic development organizations on investment attraction best practices. To learn more about why the United States is the best country in the world to develop

technology, manufacture products, deliver services, and grow your business, visit http://www.SelectUSA.gov or call +1-202-482-6800.

# Office of Petitions: Decision Count Sheet

Mailing Month 8

Application No. 15095137

*15095137*

For US serial numbers: enter number only, no slashes or commas. Ex: 10123456

For PCT: enter "51+single digit of year of filing+last 5 numbers", Ex. for PCT/US05/12345, enter 51512345

Deciding Official: Nancy Johnson

**Count (1) - Palm Credit** 15095137

Decision: GRANT

FINANCE WORK NEEDED

☐ Select Check Box for YES

*GRANT*

Decision Type: 535 - 37 CFR 1.78(a)(3) & (a)(6) UNINTENTIONAL DELAY

*535*

Notes:

**Count (2)**

Decision: n/a

FINANCE WORK NEEDED

☐ Select Check Box for YES

Decision Type: NONE

Notes:

**Count (3)**

Decision: n/a

FINANCE WORK NEEDED

☐ Select Check Box for YES

Decision Type: NONE

Notes:

Initials of Approving Official (if required)

If more than 3 decisions, attach 2nd count sheet & mark this box ☐

Printed on: 8/3/2017

Office of Petitions Internal Document - Ver. 5.0

UNITED STATES PATENT AND TRADEMARK OFFICE

UNITED STATES DEPARTMENT OF COMMERCE
United States Patent and Trademark Office
Address: COMMISSIONER FOR PATENTS
P.O. Box 1450
Alexandria, Virginia 22313-1450
www.uspto.gov

| APPLICATION NUMBER | FILING or 371(c) DATE | GRP ART UNIT | FIL FEE REC'D | ATTY.DOCKET.NO | TOT CLAIMS | IND CLAIMS |
|---|---|---|---|---|---|---|
| 15/095,137 | 04/10/2016 | 2637 | 840 | UBI-002D | 5 | 1 |

**CONFIRMATION NO. 5317**

**CORRECTED FILING RECEIPT**

93749
Alexander Soto
7673 Hazard Center Dr.
San Diego, CA 92108

Date Mailed: 08/07/2017

Receipt is acknowledged of this non-provisional patent application. The application will be taken up for examination in due course. Applicant will be notified as to the results of the examination. Any correspondence concerning the application must include the following identification information: the U.S. APPLICATION NUMBER, FILING DATE, NAME OF APPLICANT, and TITLE OF INVENTION. Fees transmitted by check or draft are subject to collection. Please verify the accuracy of the data presented on this receipt. **If an error is noted on this Filing Receipt, please submit a written request for a Filing Receipt Correction. Please provide a copy of this Filing Receipt with the changes noted thereon. If you received a "Notice to File Missing Parts" for this application, please submit any corrections to this Filing Receipt with your reply to the Notice. When the USPTO processes the reply to the Notice, the USPTO will generate another Filing Receipt incorporating the requested corrections**

**Inventor(s)**

Alexander Soto, San Diego, CA;
Walter Soto, San Clemente, CA;

**Applicant(s)**

Alexander Soto, San Diego, CA;
Walter Soto, San Clemente, CA;

**Power of Attorney:** None

**Domestic Priority data as claimed by applicant**

This application is a CON of 12/512,968 07/30/2009 PAT 9337948
which is a CIP of 11/772,187 06/30/2007 ABN
which is a CON of 10/865,547 06/10/2004 PAT 7242868
which claims benefit of 60/477,845 06/10/2003
and claims benefit of 60/480,488 06/21/2003

**Foreign Applications** for which priority is claimed (You may be eligible to benefit from the **Patent Prosecution Highway** program at the USPTO. Please see http://www.uspto.gov for more information.) - None.
*Foreign application information must be provided in an Application Data Sheet in order to constitute a claim to foreign priority. See 37 CFR 1.55 and 1.76.*

**Permission to Access Application via Priority Document Exchange:** Yes

**Permission to Access Search Results:** Yes

Applicant may provide or rescind an authorization for access using Form PTO/SB/39 or Form PTO/SB/69 as appropriate.

**If Required, Foreign Filing License Granted:** 04/25/2016
The country code and number of your priority application, to be used for filing abroad under the Paris Convention, is **US 15/095,137**
**Projected Publication Date:** Not Applicable
**Non-Publication Request:** No
**Early Publication Request:** No
**** SMALL ENTITY ****
**Title**

SYSTEM AND METHOD FOR PERFORMING HIGH-SPEED COMMUNICATIONS OVER FIBER OPTICAL NETWORKS

**Preliminary Class**

398

**Statement under 37 CFR 1.55 or 1.78 for AIA (First Inventor to File) Transition Applications:** No

## PROTECTING YOUR INVENTION OUTSIDE THE UNITED STATES

Since the rights granted by a U.S. patent extend only throughout the territory of the United States and have no effect in a foreign country, an inventor who wishes patent protection in another country must apply for a patent in a specific country or in regional patent offices. Applicants may wish to consider the filing of an international application under the Patent Cooperation Treaty (PCT). An international (PCT) application generally has the same effect as a regular national patent application in each PCT-member country. The PCT process **simplifies** the filing of patent applications on the same invention in member countries, but **does not result** in a grant of "an international patent" and does not eliminate the need of applicants to file additional documents and fees in countries where patent protection is desired.

Almost every country has its own patent law, and a person desiring a patent in a particular country must make an application for patent in that country in accordance with its particular laws. Since the laws of many countries differ in various respects from the patent law of the United States, applicants are advised to seek guidance from specific foreign countries to ensure that patent rights are not lost prematurely.

Applicants also are advised that in the case of inventions made in the United States, the Director of the USPTO must issue a license before applicants can apply for a patent in a foreign country. The filing of a U.S. patent application serves as a request for a foreign filing license. The application's filing receipt contains further information and guidance as to the status of applicant's license for foreign filing.

Applicants may wish to consult the USPTO booklet, "General Information Concerning Patents" (specifically, the section entitled "Treaties and Foreign Patents") for more information on timeframes and deadlines for filing foreign patent applications. The guide is available either by contacting the USPTO Contact Center at 800-786-9199, or it can be viewed on the USPTO website at http://www.uspto.gov/web/offices/pac/doc/general/index.html.

For information on preventing theft of your intellectual property (patents, trademarks and copyrights), you may wish to consult the U.S. Government website, http://www.stopfakes.gov. Part of a Department of Commerce initiative, this website includes self-help "toolkits" giving innovators guidance on how to protect intellectual property in specific

countries such as China, Korea and Mexico. For questions regarding patent enforcement issues, applicants may call the U.S. Government hotline at 1-866-999-HALT (1-866-999-4258).

## LICENSE FOR FOREIGN FILING UNDER

## Title 35, United States Code, Section 184

## Title 37, Code of Federal Regulations, 5.11 & 5.15

**GRANTED**

The applicant has been granted a license under 35 U.S.C. 184, if the phrase "IF REQUIRED, FOREIGN FILING LICENSE GRANTED" followed by a date appears on this form. Such licenses are issued in all applications where the conditions for issuance of a license have been met, regardless of whether or not a license may be required as set forth in 37 CFR 5.15. The scope and limitations of this license are set forth in 37 CFR 5.15(a) unless an earlier license has been issued under 37 CFR 5.15(b). The license is subject to revocation upon written notification. The date indicated is the effective date of the license, unless an earlier license of similar scope has been granted under 37 CFR 5.13 or 5.14.

This license is to be retained by the licensee and may be used at any time on or after the effective date thereof unless it is revoked. This license is automatically transferred to any related applications(s) filed under 37 CFR 1.53(d). This license is not retroactive.

The grant of a license does not in any way lessen the responsibility of a licensee for the security of the subject matter as imposed by any Government contract or the provisions of existing laws relating to espionage and the national security or the export of technical data. Licensees should apprise themselves of current regulations especially with respect to certain countries, of other agencies, particularly the Office of Defense Trade Controls, Department of State (with respect to Arms, Munitions and Implements of War (22 CFR 121-128)); the Bureau of Industry and Security, Department of Commerce (15 CFR parts 730-774); the Office of Foreign AssetsControl, Department of Treasury (31 CFR Parts 500+) and the Department of Energy.

**NOT GRANTED**

No license under 35 U.S.C. 184 has been granted at this time, if the phrase "IF REQUIRED, FOREIGN FILING LICENSE GRANTED" DOES NOT appear on this form. Applicant may still petition for a license under 37 CFR 5.12, if a license is desired before the expiration of 6 months from the filing date of the application. If 6 months has lapsed from the filing date of this application and the licensee has not received any indication of a secrecy order under 35 U.S.C. 181, the licensee may foreign file the application pursuant to 37 CFR 5.15(b).

---

## *SelectUSA*

The United States represents the largest, most dynamic marketplace in the world and is an unparalleled location for business investment, innovation, and commercialization of new technologies. The U.S. offers tremendous resources and advantages for those who invest and manufacture goods here. Through SelectUSA, our nation works to promote and facilitate business investment. SelectUSA provides information assistance to the international investor community; serves as an ombudsman for existing and potential investors; advocates on behalf of U.S. cities, states, and regions competing for global investment; and counsels U.S. economic development organizations on investment attraction best practices. To learn more about why the United States is the best country in the world to develop

technology, manufacture products, deliver services, and grow your business, visit http://www.SelectUSA.gov or call +1-202-482-6800.

| | |
|---|---|
| **PATENTS**<br>**Docket No. UBI-002D** | |
| **IN THE UNITED STATES PATENT AND TRADEMARK OFFICE** | |
| In re Application of:<br>**Alexander I. Soto et al.** | Group Art Unit: **2637** |
| Patent Application No.: **15/095,137** | |
| Filed on: **April 10, 2016** | Examiner: Bello, Agustin |
| For: **SYSTEM AND METHOD FOR PERFORMING HIGH-SPEED COMMUNICATIONS OVER FIBER OPTICAL NETWORKS** | |

Commissioner for Patents
Mail Stop Amendment
PO Box 1450
Alexandria, VA 22313-4150

**PETITION FOR UNINTENTIONALLY DELAYED DOMESTIC BENEFIT CLAIM**

Applicants' petition to accept unintentionally delayed priority claim of instant application to include priority claim to US. Appl. No. 10/865,547 which claims benefit of US Provisional Appl. No. 60/480,488 which claims benefit of US Provisional Appl. No. 60/477,845. These priority claims are included in the original ADS filed on April 10, 2016, however US. Appl. No. 10/865,547 was inadvertently and incorrectly claimed as a continuation-in-part and NOT as a continuation. These priority claims were unintentionally delayed and the entire delay between the date the claim was due and the date the claim was filed was unintentional. The reference required by 35 U.S.C 10 and 37 CFR 1.78(d)(2)(i) is submitted as a corrected ADS with the corrected priority claims underlined. The petition fee per 37 CFR 1.17(m) is submitted herewith. If additional information on the unintentional delay or additional fees are required, please contact Alexander Soto (contact information below).

Respectfully submitted,

/Alexander Soto/

Customer No. 93749
858-527-2397
Alexander.I.Soto@gmail.com

# CORRECTED ADS FORM

| | |
|---|---|
| Application Number | 15095137 |
| Title of Invention | SYSTEM AND METHOD FOR PERFORMING HIGH-SPEED COMMUNICATIONS OVER FIBER OPTICAL NETWORKS |

**Inventor Information**

****If no data is shown, no data has been corrected****

| | Data of Record | Updated Data |
|---|---|---|
| Order Number | | |
| Name | | |
| **Residence Information** | | |
| Residency | | |
| City | | |
| State | | |
| Country of Residence | | |
| **Mailing Address of Inventor** | | |
| Address 1 | | |
| Address 2 | | |
| City,State/Province, Postal Code | | |
| Country | | |

**Application Information**

| | Data of Record | Updated Data |
|---|---|---|
| Title of Invention | SYSTEM AND METHOD FOR PERFORMING HIGH-SPEED COMMUNICATIONS OVER FIBER OPTICAL NETWORKS | |
| Attorney Docket Number | UBI-002D | |
| Entity Type | Small | |

## Domestic Benefit/National Stage Information

****If no data is shown, no data has been corrected****

This section allows for the applicant to either claim benefit under 35 U.S.C. 119(e), 120, 121,365(c), or 386(c) or indicate National Stage entry from a PCT application. Providing this information in the application data sheet constitutes the specific reference required by 35 U.S. C. 119(e) or 120, and 37 CFR 1.78(a).

| | | Data of Record | Updated Data |
|---|---|---|---|
| | Prior Application Status | patented | |
| | Application Number | 15095137 | |
| | Continuity Type | CON | |
| | Prior Application Number | 12512968 | |
| | Filing Date (YYYY-MM-DD) | 2009-07-30 | |
| | Patent Number | 9337948 | |
| | Issue Date (YYYY-MM-DD) | 2016-05-10 | |

| | | Data of Record | Updated Data |
|---|---|---|---|
| | Prior Application Status | abandoned | |
| | Application Number | 12512968 | |
| | Continuity Type | CIP | |
| | Prior Application Number | 11772187 | |
| | Filing Date (YYYY-MM-DD) | 2007-06-30 | |
| | Patent Number | | |
| | Issue Date (YYYY-MM-DD) | 0001-01-01 | |

| | | Data of Record | Updated Data |
|---|---|---|---|
| | Prior Application Status | | patented |
| | Application Number | | 11772187 |
| | Continuity Type | | CON |
| | Prior Application Number | | 10865547 |
| | Filing Date (YYYY-MM-DD) | | 2004-06-10 |
| | Patent Number | | 7242868 |
| | Issue Date (YYYY-MM-DD) | | 2007-07-10 |

| | | Data of Record | Updated Data |
|---|---|---|---|
| | Prior Application Status | | expired |
| | Application Number | | 10865547 |
| | Continuity Type | | PRO |
| | Prior Application Number | | 60480488 |
| | Filing Date (YYYY-MM-DD) | | 2003-06-21 |
| | Patent Number | | |
| | Issue Date (YYYY-MM-DD) | | |

| | | Data of Record | Updated Data |
|---|---|---|---|
| | Prior Application Status | | expired |
| | Application Number | | 10865547 |
| | Continuity Type | | PRO |
| | Prior Application Number | | 60477845 |
| | Filing Date (YYYY-MM-DD) | | 2003-06-10 |
| | Patent Number | | |
| | Issue Date (YYYY-MM-DD) | | |

## Foreign Priority Information

****If no data is shown, no data has been corrected****

This section allows for the applicant to claim priority to a foreign application. Providing this information in the application data sheet constitutes the claim for priority as required by 35 U.S.C. 119(b) and 37 CFR 1.55. When priority is claimed to a foreign application that is eligible for retrieval under the priority document exchange program (PDX) the information will be used by the Office to automatically attempt retrieval pursuant to 37 CFR 1.55(i)(1) and (2). Under the PDX program, applicant bears the ultimate responsibility for ensuring that a copy of the foreign application is received by the Office from the participating foreign intellectual property office, or a certified copy of the foreign priority application is filed, within the time period specified in 37 CFR 1.55(g)(1).

| | | Data of Record | Updated Data |
|---|---|---|---|
| | Application Number | | |
| | Country | | |
| | Filing Date | | |
| | Access Code | | |

## Applicant Information

****If no data is shown, no data has been corrected****
Providing assignment information in this section does not substitute for compliance with any requirement of part 3 of Title 37 of CFR to have an assignment recorded by the Office.

| | Data of Record | Updated Data |
|---|---|---|
| Applicant Type | | |

| | | |
|---|---|---|
| If applicant is the legal representative, indicate the authority to file the patent application, the inventor is | | |
| Name of the Deceased or Legally Incapacitated Inventor | | |
| Applicant is an Organization | | |
| Name | | |
| Organization Name | | |
| Address 1 | | |
| Address 2 | | |
| City,State/Province,Postal Code | | |
| Country | | |
| Phone Number | | |
| Fax Number | | |
| Email Address | | |

## Assignee Information including Non-Applicant Assignee Information

****If no data is shown, no data has been corrected****
Providing this information in the application data sheet does not substitute for compliance with any requirement of part 3 of Title 37 of the CFR to have an assignment recorded in the Office

| | Data of Record | Updated Data |
|---|---|---|
| Order | | |
| Applicant is an Organization | | |
| Name | | |

| | | |
|---|---|---|
| Organization Name | | |
| **Mailing Address** | | |
| Address 1 | | |
| Address 2 | | |
| City,State/Province,Postal Code | | |
| Country | | |
| Phone Number | | |
| Fax Number | | |
| Email Address | | |

## Signature

NOTE: This Application Data Sheet must be signed in accordance with 37 CFR 1.33(b).

This Application Data Sheet **must** be signed by a patent practitioner if one or more of the applicants is a **juristic entity** (e.g., corporation or association). If the applicant is two or more joint inventors, this form must be signed by a patent practitioner, **all** joint inventors who are the applicant, or one or more joint inventor-applicants who have been given power of attorney (e.g., see USPTO Form PTO/AIA/81) on behalf of **all** joint inventor-applicants.

See 37 CFR 1.4(d) for the manner of making signatures and certifications.

| | | | |
|---|---|---|---|
| Signature | /Alexander Soto/ | Registration Number | |
| First Name | Alexander | Last Name | Soto |

| | | | |
|---|---|---|---|
| Signature | /Walter Soto/ | Registration Number | |
| First Name | Walter | Last Name | Soto |

# Electronic Patent Application Fee Transmittal

| | |
|---|---|
| **Application Number:** | 15095137 |
| **Filing Date:** | 10-Apr-2016 |
| **Title of Invention:** | SYSTEM AND METHOD FOR PERFORMING HIGH-SPEED COMMUNICATIONS OVER FIBER OPTICAL NETWORKS |
| **First Named Inventor/Applicant Name:** | Alexander Soto |
| **Filer:** | Alexander Ivan Soto |
| **Attorney Docket Number:** | UBI-002D |

Filed as Small Entity

**Filing Fees for Utility under 35 USC 111(a)**

| Description | Fee Code | Quantity | Amount | Sub-Total in USD($) |
|---|---|---|---|---|
| **Basic Filing:** | | | | |
| **Pages:** | | | | |
| **Claims:** | | | | |
| **Miscellaneous-Filing:** | | | | |
| **Petition:** | | | | |
| PET. DELAY SUB OR RESTORE PRIORITY-CLAIM | 2454 | 1 | 850 | 850 |
| **Patent-Appeals-and-Interference:** | | | | |
| **Post-Allowance-and-Post-Issuance:** | | | | |

| Description | Fee Code | Quantity | Amount | Sub-Total in USD($) |
|---|---|---|---|---|
| **Extension-of-Time:** | | | | |
| **Miscellaneous:** | | | | |
| | | **Total in USD ($)** | | **850** |

# Electronic Acknowledgement Receipt

| | |
|---|---|
| **EFS ID:** | 29375449 |
| **Application Number:** | 15095137 |
| **International Application Number:** | |
| **Confirmation Number:** | 5317 |
| **Title of Invention:** | SYSTEM AND METHOD FOR PERFORMING HIGH-SPEED COMMUNICATIONS OVER FIBER OPTICAL NETWORKS |
| **First Named Inventor/Applicant Name:** | Alexander Soto |
| **Customer Number:** | 93749 |
| **Filer:** | Alexander Ivan Soto |
| **Filer Authorized By:** | |
| **Attorney Docket Number:** | UBI-002D |
| **Receipt Date:** | 01-JUN-2017 |
| **Filing Date:** | 10-APR-2016 |
| **Time Stamp:** | 22:31:16 |
| **Application Type:** | Utility under 35 USC 111(a) |

## Payment information:

| | |
|---|---|
| Submitted with Payment | yes |
| Payment Type | CARD |
| Payment was successfully received in RAM | $850 |
| RAM confirmation Number | 060217INTEFSW22325400 |
| Deposit Account | |
| Authorized User | |

The Director of the USPTO is hereby authorized to charge indicated fees and credit any overpayment as follows:

## File Listing:

| Document Number | Document Description | File Name | File Size(Bytes)/ Message Digest | Multi Part /.zip | Pages (if appl.) |
|---|---|---|---|---|---|
| 1 | Petition for review by the Office of Petitions | UBI-002D_petition_priorityclaim.pdf | 76635<br>1d9567b2b10c72ad91c52a7cb21073f1d6b8f7bf | no | 1 |
| **Warnings:** | | | | | |
| **Information:** | | | | | |
| 2 | Request for Corrected Filing Receipt | UBI-002D_CorrectedADS.pdf | 90696<br>2befbdd7a4e188205b14165d5e3014fd3cfa51df | no | 7 |
| **Warnings:** | | | | | |
| **Information:** | | | | | |
| 3 | Fee Worksheet (SB06) | fee-info.pdf | 30658<br>fac00802649b800050e3de885301a5573fe4e773 | no | 2 |
| **Warnings:** | | | | | |
| **Information:** | | | | | |
| | | **Total Files Size (in bytes):** | 197989 | | |

**This Acknowledgement Receipt evidences receipt on the noted date by the USPTO of the indicated documents, characterized by the applicant, and including page counts, where applicable. It serves as evidence of receipt similar to a Post Card, as described in MPEP 503.**

**<u>New Applications Under 35 U.S.C. 111</u>**
**If a new application is being filed and the application includes the necessary components for a filing date (see 37 CFR 1.53(b)-(d) and MPEP 506), a Filing Receipt (37 CFR 1.54) will be issued in due course and the date shown on this Acknowledgement Receipt will establish the filing date of the application.**
**<u>National Stage of an International Application under 35 U.S.C. 371</u>**
**If a timely submission to enter the national stage of an international application is compliant with the conditions of 35 U.S.C. 371 and other applicable requirements a Form PCT/DO/EO/903 indicating acceptance of the application as a national stage submission under 35 U.S.C. 371 will be issued in addition to the Filing Receipt, in due course.**
**<u>New International Application Filed with the USPTO as a Receiving Office</u>**
**If a new international application is being filed and the international application includes the necessary components for an international filing date (see PCT Article 11 and MPEP 1810), a Notification of the International Application Number and of the International Filing Date (Form PCT/RO/105) will be issued in due course, subject to prescriptions concerning national security, and the date shown on this Acknowledgement Receipt will establish the international filing date of the application.**

UNITED STATES PATENT AND TRADEMARK OFFICE

**UNITED STATES DEPARTMENT OF COMMERCE**
**United States Patent and Trademark Office**
Address: COMMISSIONER FOR PATENTS
P.O. Box 1450
Alexandria, Virginia 22313-1450
www.uspto.gov

| APPLICATION NO. | FILING DATE | FIRST NAMED INVENTOR | ATTORNEY DOCKET NO. | CONFIRMATION NO. |
|---|---|---|---|---|
| 15/095,137 | 04/10/2016 | Alexander Soto | UBI-002D | 5317 |

93749 7590 05/04/2017
Alexander Soto
7673 Hazard Center Dr.
San Diego, CA 92108

| EXAMINER |
|---|
| BELLO, AGUSTIN |

| ART UNIT | PAPER NUMBER |
|---|---|
| 2637 | |

| NOTIFICATION DATE | DELIVERY MODE |
|---|---|
| 05/04/2017 | ELECTRONIC |

**Please find below and/or attached an Office communication concerning this application or proceeding.**

The time period for reply, if any, is set in the attached communication.

Notice of the Office communication was sent electronically on above-indicated "Notification Date" to the following e-mail address(es):

alexander.i.soto@gmail.com

**Ex. 1024.116**

| Office Action Summary | Application No. 15/095,137 | Applicant(s) SOTO ET AL. | |
|---|---|---|---|
| | Examiner AGUSTIN BELLO | Art Unit 2637 | AIA (First Inventor to File) Status No |

***-- The MAILING DATE of this communication appears on the cover sheet with the correspondence address --***

**Period for Reply**

A SHORTENED STATUTORY PERIOD FOR REPLY IS SET TO EXPIRE 3 MONTHS FROM THE MAILING DATE OF THIS COMMUNICATION.

- Extensions of time may be available under the provisions of 37 CFR 1.136(a). In no event, however, may a reply be timely filed after SIX (6) MONTHS from the mailing date of this communication.
- If NO period for reply is specified above, the maximum statutory period will apply and will expire SIX (6) MONTHS from the mailing date of this communication.
- Failure to reply within the set or extended period for reply will, by statute, cause the application to become ABANDONED (35 U.S.C. § 133). Any reply received by the Office later than three months after the mailing date of this communication, even if timely filed, may reduce any earned patent term adjustment. See 37 CFR 1.704(b).

**Status**

1)☒ Responsive to communication(s) filed on *04/05/17*.

☐ A declaration(s)/affidavit(s) under **37 CFR 1.130(b)** was/were filed on _____.

2a)☒ This action is **FINAL**. 2b)☒ This action is non-final.

3)☐ An election was made by the applicant in response to a restriction requirement set forth during the interview on _____; the restriction requirement and election have been incorporated into this action.

4)☐ Since this application is in condition for allowance except for formal matters, prosecution as to the merits is closed in accordance with the practice under *Ex parte Quayle*, 1935 C.D. 11, 453 O.G. 213.

**Disposition of Claims***

5)☒ Claim(s) *1-21* is/are pending in the application.

5a) Of the above claim(s) _____ is/are withdrawn from consideration.

6)☐ Claim(s) _____ is/are allowed.

7)☒ Claim(s) *1-21* is/are rejected.

8)☐ Claim(s) _____ is/are objected to.

9)☐ Claim(s) _____ are subject to restriction and/or election requirement.

* If any claims have been determined allowable, you may be eligible to benefit from the **Patent Prosecution Highway** program at a participating intellectual property office for the corresponding application. For more information, please see http://www.uspto.gov/patents/init_events/pph/index.jsp or send an inquiry to PPHfeedback@uspto.gov.

**Application Papers**

10)☐ The specification is objected to by the Examiner.

11)☒ The drawing(s) filed on *04/10/16* is/are: a)☒ accepted or b)☐ objected to by the Examiner.

Applicant may not request that any objection to the drawing(s) be held in abeyance. See 37 CFR 1.85(a).

Replacement drawing sheet(s) including the correction is required if the drawing(s) is objected to. See 37 CFR 1.121(d).

**Priority under 35 U.S.C. § 119**

12)☐ Acknowledgment is made of a claim for foreign priority under 35 U.S.C. § 119(a)-(d) or (f).

**Certified copies:**

a)☐ All b)☐ Some** c)☐ None of the:

1.☐ Certified copies of the priority documents have been received.

2.☐ Certified copies of the priority documents have been received in Application No. _____.

3.☐ Copies of the certified copies of the priority documents have been received in this National Stage application from the International Bureau (PCT Rule 17.2(a)).

** See the attached detailed Office action for a list of the certified copies not received.

**Attachment(s)**

1) ☒ Notice of References Cited (PTO-892)

2) ☒ Information Disclosure Statement(s) (PTO/SB/08a and/or PTO/SB/08b) Paper No(s)/Mail Date *04/05/17*.

3) ☐ Interview Summary (PTO-413) Paper No(s)/Mail Date. _____ .

4) ☐ Other: _____.

## DETAILED ACTION

### *Notice of Pre-AIA or AIA Status*

1. The present application is being examined under the pre-AIA first to invent provisions.

### *Claim Objections*

2. A series of singular dependent claims is permissible in which a dependent claim refers to a preceding claim which, in turn, refers to another preceding claim.

A claim which depends from a dependent claim should not be separated by any claim which does not also depend from said dependent claim. It should be kept in mind that a dependent claim may refer to any preceding independent claim. In general, applicant's sequence will not be changed. See MPEP § 608.01(n).

### *Double Patenting*

3. The nonstatutory double patenting rejection is based on a judicially created doctrine grounded in public policy (a policy reflected in the statute) so as to prevent the unjustified or improper timewise extension of the "right to exclude" granted by a patent and to prevent possible harassment by multiple assignees. A nonstatutory double patenting rejection is appropriate where the conflicting claims are not identical, but at least one examined application claim is not patentably distinct from the reference claim(s)

because the examined application claim is either anticipated by, or would have been obvious over, the reference claim(s). See, e.g., *In re Berg*, 140 F.3d 1428, 46 USPQ2d 1226 (Fed. Cir. 1998); *In re Goodman*, 11 F.3d 1046, 29 USPQ2d 2010 (Fed. Cir. 1993); *In re Longi*, 759 F.2d 887, 225 USPQ 645 (Fed. Cir. 1985); *In re Van Ornum*, 686 F.2d 937, 214 USPQ 761 (CCPA 1982); *In re Vogel*, 422 F.2d 438, 164 USPQ 619 (CCPA 1970); *In re Thorington*, 418 F.2d 528, 163 USPQ 644 (CCPA 1969).

A timely filed terminal disclaimer in compliance with 37 CFR 1.321(c) or 1.321(d) may be used to overcome an actual or provisional rejection based on nonstatutory double patenting provided the reference application or patent either is shown to be commonly owned with the examined application, or claims an invention made as a result of activities undertaken within the scope of a joint research agreement. See MPEP § 717.02 for applications subject to examination under the first inventor to file provisions of the AIA as explained in MPEP § 2159. See MPEP §§ 706.02(l)(1) - 706.02(l)(3) for applications not subject to examination under the first inventor to file provisions of the AIA. A terminal disclaimer must be signed in compliance with 37 CFR 1.321(b).

The USPTO Internet website contains terminal disclaimer forms which may be used. Please visit www.uspto.gov/patent/patents-forms. The filing date of the application in which the form is filed determines what form (e.g.,

PTO/SB/25, PTO/SB/26, PTO/AIA/25, or PTO/AIA/26) should be used. A web-based eTerminal Disclaimer may be filled out completely online using web-screens. An eTerminal Disclaimer that meets all requirements is auto-processed and approved immediately upon submission. For more information about eTerminal Disclaimers, refer to www.uspto.gov/patents/process/file/efs/guidance/eTD-info-I.jsp.

4. Claims 1-21 are rejected on the ground of nonstatutory double patenting as being unpatentable over claims 1-17 of U.S. Patent No. 9,337,948 B2 in view of Gilliland (Pub. No.: US 2002/0181895 A1). Each of the limitations of the claimed invention in the instant application are met by the limitations of U.S. Patent No. 9,337,948 B2 with the exception of the recitation of a "pluggable" optical transceiver module. However, Gilliland teaches that the concept of a pluggable optical transceiver module is well known in the art (e.g. “hot -pluggable” as in paragraph [0003] and “small form factor pluggable (SFP) configuration” as recited in claim 8). One skilled in the art would have been motivated to utilize a pluggable optical transceiver module in order to allow quick install and removal of the optoelectronic transceiver module (as in abstract of Gilliland). Therefore, it would have been obvious to one skilled in the art at the time the invention was made to utilize a pluggable optical transceiver module in the invention of U.S. Patent No. 9,337,948 B2.

## *Claim Rejections - 35 USC § 102*

5. In the event the determination of the status of the application as subject to AIA 35 U.S.C. 102 and 103 (or as subject to pre-AIA 35 U.S.C. 102 and 103) is incorrect, any correction of the statutory basis for the rejection will not be considered a new ground of rejection if the prior art relied upon, and the rationale supporting the rejection, would be the same under either status.

6. The following is a quotation of the appropriate paragraphs of pre-AIA 35 U.S.C. 102 that form the basis for the rejections under this section made in this Office action:

> A person shall be entitled to a patent unless –
>
> (e) the invention was described in (1) an application for patent, published under section 122(b), by another filed in the United States before the invention by the applicant for patent or (2) a patent granted on an application for patent by another filed in the United States before the invention by the applicant for patent, except that an international application filed under the treaty defined in section 351(a) shall have the effects for purposes of this subsection of an application filed in the United States only if the international application designated the United States and was published under Article 21(2) of such treaty in the English language.

7. Claim(s) 1, 3-5 is/are rejected under pre-AIA 35 U.S.C. 102(e) as being anticipated by Brede (Patent No.: US 6,603,822 B2).

Regarding claim 1, Brede teaches a method for m-ary modulation communication across an optical network by a pluggable optical transceiver module (e.g. Figure 3 in its entirety) comprising of: receiving a first electrical binary data signal through a system interface (e.g. "Network

Interface" of Figure 3) of the pluggable optical transceiver module; converting the first electrical binary data signal in the pluggable optical transceiver module to a first electrical m-ary modulation signal (e.g. "takes the input bits and maps them into a complex constellation point" as in column 42 lines 49-67); amplifying (reference numeral 148 in Figure 21) the first electrical m-ary modulation signal to drive an optical transmitter (reference numeral 14 in Figure 3) of the pluggable optical transceiver module; emitting (reference numeral 14, 24 in Figure 3; reference numeral 501 in Figure 4) a first optical signal on a first wavelength responsive to and representative of the amplified first electrical m-ary modulation signal from the optical transmitter of the pluggable optical transceiver module; receiving (reference numeral 16, 26 in Figure 3) a second optical signal on a second wavelength and producing an electrical signal from an optical detector (reference numeral 16 in Figure 3; reference numeral 502 in Figure 4) of the pluggable optical transceiver module; amplifying (reference numeral 82 in Figure 3; reference numeral 154 in Figure 22; reference numeral 234 in Figure 37) the electrical signal to facilitate clock and data recovery in the pluggable optical transceiver module; equalizing (reference numeral 172 in Figure 22, reference numeral 214 in Figure 26; Figure 35 in its entirety) the amplified electrical signal and recovering clock data information (reference numeral 54 in Figure 3; reference numeral 168 in Figure 22; reference

numeral 222 in Figure 26) to produce a second m-ary modulation signal in the pluggable optical transceiver module; demodulating (reference numeral 174, 176 in Figure 22; reference numeral 216 in Figure 26; reference numeral 366 in Figure 35) the second m-ary modulation signal according to a second electrical binary signal; and transmitting the second electrical binary signal through the system interface (e.g. "Network Interface" of Figure 3) of the pluggable optical transceiver module.

Regarding claim 3, 13, Brede teaches the method of claim 1, whereby the m-ary modulation method is a m-ary pulse amplitude modulation communication method that uses two or more bits per symbol for communication (column 6 line 5-18; column 3 line 11-21; column 11 line 1-8; column 19 line 34-67).

Regarding claim 6, Brede teaches the method of claim 1, further comprising performing decision directed equalization on the clock data information to remove noise in the pluggable optical transceiver module (column 67 line 5-11; "coefficients" as in column 54 lines 8-24, 33-47 and beyond).

Regarding claim 7, Brede teaches the method of claim 1, further comprising performing a blind equalization on the clock data information to remove noise in the pluggable optical transceiver module ((e.g. "equalizer tracks out phase and gain or amplitude variations due to environmental

changes and can therefore adapt slowly while maintaining sufficiently accurate tracking" as in column 54 lines 8-47).

Regarding claim 4, Brede teaches the method of claim 6, further comprising of: storing a first set of coefficients of the decision directed equalization to apply to a subsequent clock data information in the pluggable optical transceiver module and loading the first set of coefficients of the decision directed equalization to filter noise (column 67 line 5-11; "coefficients" as in column 54 lines 8-24, 33-47 and beyond).

Regarding claim 5, Brede teaches the method of claim 7, further comprising of: storing a first set of coefficients of the blind equalization to apply to a subsequent clock data information in the pluggable optical transceiver module, and loading the first set of stored coefficients of the blind equalization to filter noise (column 67 line 5-11; "coefficients" as in column 54 lines 8-24, 33-47 and beyond).

Regarding claim 10, Brede teaches the method of claim 1, whereby the first electrical binary data signal and second electrical binary data signal are parallel electrical binary data signals (e.g. "DSX-1" as illustrated in Figure 3).

Regarding claim 14, Brede teaches the method of claim 1, whereby the m-ary modulation is a m-ary quadrature phase shift keying modulation

communication method that uses two or more bits per symbol for communication (e.g. "QPSK" as in column 42 lines 49-67).

Regarding claim 15, Brede teaches the method of claim 1, whereby the m-ary modulation is an orthogonal frequency division multiplexing modulation communication method that uses two or more bits per symbol for communication (e.g. "OFDM" as in column 19 lines 34-67).

Regarding claim 16, Brede teaches the method of claim 1, further comprising coding the first electrical binary data signal and decoding the second electrical binary signal according to an error correcting code in the pluggable optical transceiver module (e.g. "codes" "error correction" as in column 31 lines 16 – column 32 line 31).

Regarding claim 18, Brede teaches the method of claim 16, whereby the error correcting code is a forward error correcting (FEC) code (e.g. "FEC" as in column 95 lines 55-65; "forward error correction codes" as in column 96 lines 33-41).

Regarding claim 20, Brede teaches the method of claim 16, whereby the error correcting code is a Reed-Solomon code (e.g. "Reed-Soloman code" as in column 31 lines 33-55).

Regarding claim 21, Brede teaches the method of claim 16, whereby the error correcting code is a low-density parity- check (LDPC) code (e.g. "will check the parity" as in column 29 lines 20-45 and throughout).

## *Claim Rejections - 35 USC § 103*

8. In the event the determination of the status of the application as subject to AIA 35 U.S.C. 102 and 103 (or as subject to pre-AIA 35 U.S.C. 102 and 103) is incorrect, any correction of the statutory basis for the rejection will not be considered a new ground of rejection if the prior art relied upon, and the rationale supporting the rejection, would be the same under either status.

9. The following is a quotation of pre-AIA 35 U.S.C. 103(a) which forms the basis for all obviousness rejections set forth in this Office action:

> (a) A patent may not be obtained though the invention is not identically disclosed or described as set forth in section 102, if the differences between the subject matter sought to be patented and the prior art are such that the subject matter as a whole would have been obvious at the time the invention was made to a person having ordinary skill in the art to which said subject matter pertains. Patentability shall not be negatived by the manner in which the invention was made.

10. Claim 2, 8, and 9 is/are rejected under pre-AIA 35 U.S.C. 103(a) as being unpatentable over Brede in view of Sheth (Patent No.: US 7,729,617 B2).

Regarding claim 2, Brede teaches the method of claim 1, but fails to specifically teach that the form factor of the pluggable optical transceiver module is a pluggable form factor standard. However, as evidenced by Sheth, standardized pluggable form factors are well known in the art (column 5 line 18-56). One skilled in the art would have been motivated to utilize any of the claimed form factors in order to efficiently support a variety

of client interfaces, tributary optics interfaces, data standards (column 5 line 18-56 of Sheth). Therefore, it would have been obvious to one skilled in the art at the time the invention was made to utilize a pluggable form factor standard as taught by Sheth.

Regarding claim 8, the combination of references and Sheth in particular teaches the method of claim 2, whereby the pluggable form factor standard of the pluggable optical transceiver module is an SFP form factor or SFP+ form factor standard (column 5 line 18-56).

Regarding claim 9, the combination of references and Sheth in particular teaches the method of claim 2, whereby the pluggable form factor standard of the pluggable optical transceiver module is an XFP form factor standard (column 5 line 18-56).

11. Claim 11-12, 17, and 19 is/are rejected under pre-AIA 35 U.S.C. 103(a) as being unpatentable over Brede.

Regarding claim 11, 12, Brede teaches the method of claim 1, but fails to specifically teach that the first/second optical signal emitted by the pluggable optical transceiver module is dual polarized. However, polarization of optical signals is well known in the art and Officially Noted as such. One skilled in the art would have been motivated to dually polarize the outputs of the pluggable optical transceiver in order to meet design, budgetary, or performance requirements. Therefore, it would have been

obvious to one skilled in the art at the time the invention was made to dually polarize the outputs of the pluggable optical transceiver.

Regarding claim 17, Brede teaches the method of claim 16, but fails to specifically teach that the error correcting code is a convolutional code. However, utilization of a convolution code as an error correcting code is well known in the art and Officially Noted as such. One skilled in the art would have been motivated to utilize a convolution code as an error correcting code since doing so provides the ability to perform economical maximum likelihood soft decision decoding. Therefore, it would have been obvious to one skilled in the art at the time the invention was made to utilize a convolution code as an error correcting code.

Regarding claim 19, Brede teaches the method of claim 16, but fails to specifically teach that the error correcting code is a trellis code. However, utilization of trellis code as an error correcting code is well known in the art and Officially Noted as such. One skilled in the art would have been motivated to utilize a trellis code as an error correcting code since doing so allows convolutional codes to be maximum-likelihood soft-decision decoded. Therefore, it would have been obvious to one skilled in the art at the time the invention was made to utilize a trellis code as an error correcting code.

## *Response to Arguments*

12. Applicant's arguments filed 04/05/17 have been fully considered but they are not persuasive. Applicant argues that Brede fails to teach a "pluggable optical transceiver" of the claimed invention. However, as noted in the amended office action, examiner maintains that Brede teaches these limitations via the disclosure of Figure 3 in its entirety, rather than the piecemeal analysis of Figure 3 relied upon by Applicant. Furthermore, examiner contends that the optical transceiver of Figure 3 is "pluggable" when that term is given its broadest reasonable interpretation being that the transceiver of Figure 3 will be plugged in to the network at a central office via the electrical interfaces shown in Figure 3. A similiarly broad interpretation of the term "pluggable" is met by Brede's disclosure in that at some point the optical transceiver of Figure 3 will be required to be plugged in to another element for power and data input/output.

13. Applicant's arguments with respect to claim 2 has have been considered but are moot because the arguments do not apply to any of the references being used in the current rejection.

## *Conclusion*

A shortened statutory period for reply to this final action is set to expire THREE MONTHS from the mailing date of this action. In the event a first reply is filed within TWO MONTHS of the mailing date of this final action

and the advisory action is not mailed until after the end of the THREE-MONTH shortened statutory period, then the shortened statutory period will expire on the date the advisory action is mailed, and any extension fee pursuant to 37 CFR 1.136(a) will be calculated from the mailing date of the advisory action. In no, however, event will the statutory period for reply expire later than SIX MONTHS from the mailing date of this final action.

Any inquiry concerning this communication or earlier communications from the examiner should be directed to AGUSTIN BELLO whose telephone number is (571)272-3026. The examiner can normally be reached on M-F 8:30-6:00.

If attempts to reach the examiner by telephone are unsuccessful, the examiner's supervisor, David Payne can be reached on (571)272-3024. The fax phone number for the organization where this application or proceeding is assigned is 571-273-8300.

Information regarding the status of an application may be obtained from the Patent Application Information Retrieval (PAIR) system. Status information for published applications may be obtained from either Private PAIR or Public PAIR. Status information for unpublished applications is available through Private PAIR only. For more information about the PAIR system, see http://pair-direct.uspto.gov. Should you have questions on access to the Private PAIR system, contact the Electronic Business Center (EBC) at 866-217-9197 (toll-free). If you would like assistance from a USPTO Customer Service Representative or access to the automated information system, call 800-786-9199 (IN USA OR CANADA) or 571-272-1000.

/AGUSTIN BELLO/
Primary Examiner, Art Unit 2637

| Notice of References Cited | Application/Control No. 15/095,137 | Applicant(s)/Patent Under Reexamination SOTO ET AL. | |
|---|---|---|---|
| | Examiner AGUSTIN BELLO | Art Unit 2637 | Page 1 of 2 |

**U.S. PATENT DOCUMENTS**

| * | | Document Number Country Code-Number-Kind Code | Date MM-YYYY | Name | CPC Classification | US Classification |
|---|---|---|---|---|---|---|
| * | A | US-2002/0149821 A1 | 10-2002 | Aronson, Lewis B. | G01M11/00 | 398/135 |
| * | B | US-2002/0181894 A1 | 12-2002 | Gilliland, Patrick B. | G02B6/4246 | 385/88 |
| * | C | US-2002/0181895 A1 | 12-2002 | Gilliland, Patrick B. | G02B6/4246 | 385/88 |
| * | D | US-6,603,822 B2 | 08-2003 | Brede; Jeffrey | G06F17/14 | 348/E7.07 |
| * | E | US-2004/0028408 A1 | 02-2004 | Cox, Jeffrey Lloyd | H04B10/27 | 398/66 |
| * | F | US-2007/0031153 A1 | 02-2007 | Aronson; Lewis B. | H04B10/40 | 398/138 |
| * | G | US-7,242,868 B2 | 07-2007 | Soto; Alexander I. | H04J14/02 | 375/233 |
| * | H | US-7,321,612 B2 | 01-2008 | Tonietto; Davide | G11B20/10009 | 342/151 |
| * | I | US-7,317,769 B2 | 01-2008 | Tonietto; Davide | G11B20/10009 | 342/151 |
| * | J | US-7,486,894 B2 | 02-2009 | Aronson; Lewis B. | H04B10/40 | 398/128 |
| * | K | US-7,729,617 B2 | 06-2010 | Sheth; Samir Satish | H04B10/801 | 370/465 |
| * | L | US-2010/0158530 A1 | 06-2010 | Soto; Alexander I. | H04B10/40 | 398/79 |
| * | M | US-2011/0135312 A1 | 06-2011 | EL-AHMADI; Siraj Nour | H04L1/0057 | 398/135 |

**FOREIGN PATENT DOCUMENTS**

| * | | Document Number Country Code-Number-Kind Code | Date MM-YYYY | Country | Name | CPC Classification |
|---|---|---|---|---|---|---|
| | N | | | | | |
| | O | | | | | |
| | P | | | | | |
| | Q | | | | | |
| | R | | | | | |
| | S | | | | | |
| | T | | | | | |

**NON-PATENT DOCUMENTS**

| * | | Include as applicable: Author, Title Date, Publisher, Edition or Volume, Pertinent Pages) |
|---|---|---|
| | U | |
| | V | |
| | W | |
| | X | |

*A copy of this reference is not being furnished with this Office action. (See MPEP § 707.05(a).)
Dates in MM-YYYY format are publication dates. Classifications may be US or foreign.

| Notice of References Cited | Application/Control No. 15/095,137 | Applicant(s)/Patent Under Reexamination SOTO ET AL. | |
|---|---|---|---|
| | Examiner AGUSTIN BELLO | Art Unit 2637 | Page 2 of 2 |

**U.S. PATENT DOCUMENTS**

| * | | Document Number Country Code-Number-Kind Code | Date MM-YYYY | Name | CPC Classification | US Classification |
|---|---|---|---|---|---|---|
| * | A | US-9,337,948 B2 | 05-2016 | Soto; Alexander I. | H04B10/40 | 1/1 |
| | B | US- | | | | |
| | C | US- | | | | |
| | D | US- | | | | |
| | E | US- | | | | |
| | F | US- | | | | |
| | G | US- | | | | |
| | H | US- | | | | |
| | I | US- | | | | |
| | J | US- | | | | |
| | K | US- | | | | |
| | L | US- | | | | |
| | M | US- | | | | |

**FOREIGN PATENT DOCUMENTS**

| * | | Document Number Country Code-Number-Kind Code | Date MM-YYYY | Country | Name | Classification |
|---|---|---|---|---|---|---|
| | N | | | | | |
| | O | | | | | |
| | P | | | | | |
| | Q | | | | | |
| | R | | | | | |
| | S | | | | | |
| | T | | | | | |

**NON-PATENT DOCUMENTS**

| * | | Include as applicable: Author, Title Date, Publisher, Edition or Volume, Pertinent Pages) |
|---|---|---|
| | U | |
| | V | |
| | W | |
| | X | |

*A copy of this reference is not being furnished with this Office action. (See MPEP § 707.05(a).)
Dates in MM-YYYY format are publication dates. Classifications may be US or foreign.

PTO/SB/08b (07-09)
Approved for use through 07/31/2016. OMB 0651-0031
U.S. Patent and Trademark Office; U.S. DEPARTMENT OF COMMERCE
Under the Paperwork Reduction Act of 1995, no persons are required to respond to a collection of information unless it contains a valid OMB control number.

Substitute for form 1449/PTO

# INFORMATION DISCLOSURE STATEMENT BY APPLICANT

*(Use as many sheets as necessary)*

Sheet 1 of 1

| *Complete if Known* | |
|---|---|
| **Application Number** | 15/095,137 |
| **Filing Date** | April 10, 2016 |
| **First Named Inventor** | Alexander Soto |
| Art Unit | 2637 |
| Examiner Name | Bello, Agustin |
| Attorney Docket Number | UBI-002D |

**NON PATENT LITERATURE DOCUMENTS**

| Examiner Initials* | Cite No.[1] | Include name of the author (in CAPITAL LETTERS), title of the article (when appropriate), title of the item (book, magazine, journal, serial, symposium, catalog, etc.), date, page(s), volume-issue number(s), publisher, city and/or country where published. | T[2] |
|---|---|---|---|
| | | ADC Telecommunications, "Fiber to the Premisis", September 2004. | |
| | | XFP transceiver. (n.d.). In Wikipedia. Retrieved March 30, 2017, from https://en.wikipedia.org/w/index.php?title=XFP_transceiver&oldid=752082519 | |
| | | Opltical line termination. (n.d.). In Wikipedia. Retrieved March 30, 2017, from https://en.wikipedia.org/w/index.php?title=Optical_line_termination&oldid=72809026 | |
| | | | |
| | | | |
| | | | |
| | | | |
| | | | |
| | | | |
| | | | |

| Examiner Signature | /AGUSTIN BELLO/ (04/29/2017) | Date Considered | |
|---|---|---|---|

*EXAMINER: Initial if reference considered, whether or not citation is in conformance with MPEP 609. Draw line through citation if not in conformance and not considered. Include copy of this form with next communication to applicant.

1 Applicant's unique citation designation number (optional). 2 Applicant is to place a check mark here if English language Translation is attached.

This collection of information is required by 37 CFR 1.98. The information is required to obtain or retain a benefit by the public which is to file (and by the USPTO to process) an application. Confidentiality is governed by 35 U.S.C. 122 and 37 CFR 1.14. This collection is estimated to take 2 hours to complete, including gathering, preparing, and submitting the completed application form to the USPTO. Time will vary depending upon the individual case. Any comments on the amount of time you require to complete this form and/or suggestions for reducing this burden, should be sent to the Chief Information Officer, U.S. Patent and Trademark Office, P.O. Box 1450, Alexandria, VA 22313-1450. DO NOT SEND FEES OR COMPLETED FORMS TO THIS ADDRESS. **SEND TO: Commissioner for Patents, P.O. Box 1450, Alexandria, VA 22313-1450.**

*If you need assistance in completing the form, call 1-800-PTO-9199 (1-800-786-9199) and select option 2.*



ALL REFERENCES CONSIDERED EXCEPT WHERE LINED THROUGH. /A.B./

# Privacy Act Statement

The **Privacy Act of 1974 (P.L. 93-579)** requires that you be given certain information in connection with your submission of the attached form related to a patent application or patent. Accordingly, pursuant to the requirements of the Act, please be advised that: (1) the general authority for the collection of this information is 35 U.S.C. 2(b)(2); (2) furnishing of the information solicited is voluntary; and (3) the principal purpose for which the information is used by the U.S. Patent and Trademark Office is to process and/or examine your submission related to a patent application or patent. If you do not furnish the requested information, the U.S. Patent and Trademark Office may not be able to process and/or examine your submission, which may result in termination of proceedings or abandonment of the application or expiration of the patent.

The information provided by you in this form will be subject to the following routine uses:

1. The information on this form will be treated confidentially to the extent allowed under the Freedom of Information Act (5 U.S.C. 552) and the Privacy Act (5 U.S.C 552a). Records from this system of records may be disclosed to the Department of Justice to determine whether disclosure of these records is required by the Freedom of Information Act.
2. A record from this system of records may be disclosed, as a routine use, in the course of presenting evidence to a court, magistrate, or administrative tribunal, including disclosures to opposing counsel in the course of settlement negotiations.
3. A record in this system of records may be disclosed, as a routine use, to a Member of Congress submitting a request involving an individual, to whom the record pertains, when the individual has requested assistance from the Member with respect to the subject matter of the record.
4. A record in this system of records may be disclosed, as a routine use, to a contractor of the Agency having need for the information in order to perform a contract. Recipients of information shall be required to comply with the requirements of the Privacy Act of 1974, as amended, pursuant to 5 U.S.C. 552a(m).
5. A record related to an International Application filed under the Patent Cooperation Treaty in this system of records may be disclosed, as a routine use, to the International Bureau of the World Intellectual Property Organization, pursuant to the Patent Cooperation Treaty.
6. A record in this system of records may be disclosed, as a routine use, to another federal agency for purposes of National Security review (35 U.S.C. 181) and for review pursuant to the Atomic Energy Act (42 U.S.C. 218(c)).
7. A record from this system of records may be disclosed, as a routine use, to the Administrator, General Services, or his/her designee, during an inspection of records conducted by GSA as part of that agency's responsibility to recommend improvements in records management practices and programs, under authority of 44 U.S.C. 2904 and 2906. Such disclosure shall be made in accordance with the GSA regulations governing inspection of records for this purpose, and any other relevant (*i.e.*, GSA or Commerce) directive. Such disclosure shall not be used to make determinations about individuals.
8. A record from this system of records may be disclosed, as a routine use, to the public after either publication of the application pursuant to 35 U.S.C. 122(b) or issuance of a patent pursuant to 35 U.S.C. 151. Further, a record may be disclosed, subject to the limitations of 37 CFR 1.14, as a routine use, to the public if the record was filed in an application which became abandoned or in which the proceedings were terminated and which application is referenced by either a published application, an application open to public inspection or an issued patent.
9. A record from this system of records may be disclosed, as a routine use, to a Federal, State, or local law enforcement agency, if the USPTO becomes aware of a violation or potential violation of law or regulation.



ALL REFERENCES CONSIDERED EXCEPT WHERE LINED THROUGH. /A.B./

| Index of Claims | Application/Control No. | Applicant(s)/Patent Under Reexamination |
|---|---|---|
| | 15095137 | SOTO ET AL. |
| | **Examiner** | **Art Unit** |
| | AGUSTIN BELLO | 2637 |

| | | | | | | | |
|---|---|---|---|---|---|---|---|
| ✓ | Rejected | - | Cancelled | N | Non-Elected | A | Appeal |
| = | Allowed | ÷ | Restricted | I | Interference | O | Objected |

☐ Claims renumbered in the same order as presented by applicant ☐ CPA ☐ T.D. ☐ R.1.47

| CLAIM | | DATE | | | | | | | | |
|---|---|---|---|---|---|---|---|---|---|---|
| Final | Original | 01/02/2017 | 04/29/2017 | | | | | | | |
| | 1 | ✓ | ✓ | | | | | | | |
| | 2 | ✓ | ✓ | | | | | | | |
| | 3 | ✓ | ✓ | | | | | | | |
| | 4 | ✓ | ✓ | | | | | | | |
| | 5 | ✓ | ✓ | | | | | | | |
| | 6 | | ✓ | | | | | | | |
| | 7 | | ✓ | | | | | | | |
| | 8 | | ✓ | | | | | | | |
| | 9 | | ✓ | | | | | | | |
| | 10 | | ✓ | | | | | | | |
| | 11 | | ✓ | | | | | | | |
| | 12 | | ✓ | | | | | | | |
| | 13 | | ✓ | | | | | | | |
| | 14 | | ✓ | | | | | | | |
| | 15 | | ✓ | | | | | | | |
| | 16 | | ✓ | | | | | | | |
| | 17 | | ✓ | | | | | | | |
| | 18 | | ✓ | | | | | | | |
| | 19 | | ✓ | | | | | | | |
| | 20 | | ✓ | | | | | | | |
| | 21 | | ✓ | | | | | | | |

**EAST Search History**

**EAST Search History (Prior Art)**

| Ref # | Hits | Search Query | DBs | Default Operator | Plurals | Time Stamp |
|---|---|---|---|---|---|---|
| S1 | 1 | "7242868".pn. | US-PGPUB; USPAT | OR | ON | 2012/02/11 19:36 |
| S2 | 8 | ("20080166124" \| "5150247" \| "5363408" \| "5880863" \| "6067319" \| "6490727" \| "6950477" \| "7242868").PN. | US-PGPUB; USPAT | OR | ON | 2012/02/11 19:36 |
| S3 | 11 | ("5150247" \| "5363408" \| "5835532" \| "5880863" \| "6067319" \| "6490727" \| "6950477").PN. OR ("7242868").URPN. | US-PGPUB; USPAT; USOCR | OR | ON | 2012/02/11 19:39 |
| S4 | 891 | "398"$.ccls. and (sfp sfp+ xfp x2 xenpak xpa) | US-PGPUB; USPAT; USOCR | OR | ON | 2012/02/11 19:42 |
| S5 | 52 | S4 and (qam qpsk ofdm pam m-ary) | US-PGPUB; USPAT | OR | ON | 2012/02/11 19:43 |
| S6 | 0 | ("2011/0135312").URPN. | USPAT | OR | ON | 2012/02/11 19:48 |
| S7 | 0 | ("2010/0158530").URPN. | USPAT | OR | ON | 2012/02/11 19:49 |
| S8 | 6 | S5 and equali$9 and burst$4 | US-PGPUB; USPAT | OR | ON | 2012/02/11 19:51 |
| S9 | 0 | ("2008/0166124").URPN. | USPAT | OR | ON | 2012/02/11 19:59 |
| S10 | 9 | ("2005/0019036").URPN. | USPAT | OR | ON | 2012/02/11 19:59 |
| S11 | 64 | ("3916379" \| "3934224" \| "4291403" \| "4331974" \| "4387456" \| "4393493" \| "4395768" \| "4397020" \| "4404589" \| "4604745" \| "4710924" \| "4769761" \| "5153763" \| "5175817" \| "5185736" \| "5185742" \| "5216697" \| "5351245" \| "5357249" \| "5519830" \| "5537443" \| "5655068").PN. OR ("6603822").URPN. | US-PGPUB; USPAT; USOCR | OR | ON | 2012/02/11 20:53 |
| S12 | 654 | ("20010001616" \| "20010005319" \| "20010024474" \| "20010032334" \| "20010033611" \| "20010050926" \| "20020012421" \| "20020015423" \| "20020015477" \| "20020061012" \| "20020090909" \| "20020098795" \| "20020098796" \| "20020098797" \| "20020098798" \| "20020102937" \| "20020105950" \| "20020106060" \| "20020107979" \| "20020116719" \| "20030026282" \| "20030032390" \| "20030043928" \| "20030123384" \| "20040012387" \| "20040042387" \| | US-PGPUB; USPAT; USOCR | OR | ON | 2012/02/11 21:15 |

**Ex. 1024.137**

"20050122218" | "20070053465" |
"20070076589" | "20070098047" |
"20070110096" | "20070110220" |
"20070115803" | "20070116209" |
"20070121546" | "20070121573" |
"20070121743" | "20070121744" |
"20070121745" | "20070141997" |
"20070147229" | "20070157277" |
"20070157278" | "20070162943" |
"20070174890" | "20070183591" |
"20070186260" | "20070186261" |
"20070192815" | "20070195687" |
"20070195689" | "20070195902" |
"20070201345" | "20070201346" |
"20070201347" | "20070201348" |
"20070201573" | "20070201628" |
"20070204317" | "20070206491" |
"20070206693" | "20070211617" |
"20070217324" | "20070217325" |
"20070223363" | "20070230325" |
"20070237070" | "20070237182" |
"20070242597" | "20070253500" |
"20070263665" | "20070274200" |
"20070274202" | "20070280099" |
"20070286240" | "20080025201" |
"20080025202" | "20080025284" |
"20080031127" | "20080037414" |
"20080037415" | "20080037663" |
"20080040763" | "20080043612" |
"20080043704" | "20080049599" |
"20080049604" | "20080049856" |
"20080049860" | "20080056119" |
"20080056398" | "20080063010" |
"20080082598").PN. OR ("20080123514" |
"20080225690" | "20080225691" |
"20080225692" | "20080240214" |
"20080240410" | "20080253435" |
"20080273607" | "3539924" | "3609328" |
"3628057" | "3639838" | "3700820" |
"3706933" | "3742145" | "3750022" |
"3750175" | "3769970" | "3780230" |
"3805265" | "3838343" | "3868605" |
"3916379" | "3934224" | "4009343" |
"4053713" | "4090220" | "4092596" |
"4101738" | "4105863" | "4107470" |
"4135202" | "4156847" | "4161786" |
"4185168" | "4191860" | "4206320" |
"4215366" | "4267591" | "4275452" |
"4290142" | "4291403" | "4300229" |
"4316284" | "4316285" | "4331974" |
"4343042" | "4367548" | "4381546" |
"4387456" | "4393493" | "4395768" |
"4395780" | "4397020" | "4404589" |
"4430731" | "4438511" | "4441180" |
"4466017" | "4472802" | "4475211" |
"4484218" | "4488004" | "4488294" |
"4491983" | "4494228" | "4495619" |
"4500989" | "4503533" | "4506387" |
"4512033" | "4516170" | "4519074" |
"4528656" | "4528663" | "4533948" |
"4545048" | "4558358" | "4561101" |
"4566100" | "4574305" | "4575682" |
"4587066" | "4602375" | "4604721" |
"4604745" | "4612626" | "4613975" |

**Ex. 1024.138**

"4613980" | "4617656" | "4618955" |
"4621355" | "4623920" | "4642688" |
"4642806" | "4644526" | "4644535" |
"4646296" | "4648123" | "4651320" |
"4651330" | "4661945" | "4677647" |
"4677686" | "4679227" | "4686667" |
"4688210" | "4691314" | "4701911" |
"4705350" | "4707832" | "4709406" |
"4709418" | "4710918" | "4710924" |
"4727575" | "4731816" | "4734764" |
"4745592" | "4748689" | "4757495" |
"4763317").PN. OR ("4768188" | "4769761" |
"4773066" | "4774707" | "4775210" |
"4783779" | "4791590" | "4799252" |
"4800588" | "4807259" | "4809298" |
"4821120" | "4827473" | "4847872" |
"4847880" | "4853686" | "4858225" |
"4860018" | "4860287" | "4862104" |
"4866732" | "4868811" | "4879527" |
"4881241" | "4881243" | "4891694" |
"4907233" | "4912705" | "4912721" |
"4942602" | "4943980" | "4953197" |
"4959862" | "4975899" | "4975916" |
"4977593" | "4977612" | "4980897" |
"4985902" | "4991133" | "4996706" |
"4998244" | "5005169" | "5005183" |
"5010586" | "5014267" | "5022024" |
"5025485" | "5027426" | "5029164" |
"5038342" | "5042000" | "5054050" |
"5058133" | "5063574" | "5063595" |
"5072441" | "5073899" | "5084903" |
"5086470" | "5088111" | "5091906" |
"5095482" | "5101290" | "5103459" |
"5111460" | "5111497" | "5115451" |
"5121409" | "5124980" | "5125100" |
"5128625" | "5128967" | "5134464" |
"5136411" | "5138635" | "5142532" |
"5153763" | "5153764" | "5157659" |
"5166924" | "5170470" | "5173899" |
"5175817" | "5175867" | "5177739" |
"5181106" | "5185736" | "5185738" |
"5185742" | "5191459" | "5191576" |
"5193103" | "5193109" | "5195092" |
"5197061" | "5204874" | "5206886" |
"5208812" | "5214687" | "5216696" |
"5216697" | "5225902" | "5226081" |
"5228025" | "5228062" | "5235615" |
"5235619" | "5243598" | "5245459" |
"5249305" | "5255086" | "5255290" |
"5262883" | "5272700" | "5274629" |
"5276703" | "5278889" | "5280630" |
"5282023" | "5282222" | "5283811" |
"5285474" | "5289474" | "5291289").PN. OR
("5293329" | "5293382" | "5297136" |
"5297186" | "5299192" | "5299201" |
"5303229" | "5307376" | "5313169" |
"5313413" | "5315583" | "5315584" |
"5317596" | "5321542" | "5323391" |
"5327455" | "5327575" | "5329552" |
"5331642" | "5337175" | "5341365" |
"5343209" | "5343499" | "5345439" |
"5345440" | "5347304" | "5348632" |
"5349580" | "5351245" | "5353307" |
"5355114" | "5355401" | "5357249" |

**Ex. 1024.139**

"5357502" | "5365525" | "5371548" |
"5371696" | "5371761" | "5371780" |
"5373502" | "5375140" | "5381459" |
"5387941" | "5390216" | "5400322" |
"5406551" | "5408260" | "5408465" |
"5408681" | "5416767" | "5416801" |
"5420851" | "5423067" | "5425027" |
"5425050" | "5430799" | "5440268" |
"5440335" | "5444697" | "5446727" |
"5446918" | "5448750" | "5454037" |
"5455547" | "5467384" | "5469468" |
"5469495" | "5471464" | "5471474" |
"5479168" | "5479447" | "5483529" |
"5483550" | "5485630" | "5487066" |
"5488412" | "5488413" | "5488632" |
"5495283" | "5499047" | "5499236" |
"5499241" | "5499273" | "5504773" |
"5504775" | "5507034" | "5509003" |
"5512937" | "5513184" | "5513248" |
"5519706" | "5519731" | "5519830" |
"5521943" | "5526348" | "5528283" |
"5528582" | "5528585" | "5528621" |
"5533008" | "5533012" | "5534913" |
"5535206" | "5537414" | "5537443" |
"5541955" | "5541965" | "5546119" |
"5546383" | "5548582" | "5550812" |
"5553064" | "5553076" | "5557612" |
"5557639" | "5559795" | "5559833" |
"5559858" | "5570364" | "5576702" |
"5579321" | "5581554" | "5581555" |
"5584051" | "5586121").PN. OR ("5588022" |
"5588413" | "5590403" | "5592470" |
"5592540" | "5594726" | "5596604" |
"5600672" | "5600754" | "5602836" |
"5603081" | "5606576" | "5606725" |
"5608764" | "5610944" | "5613193" |
"5617148" | "5619504" | "5621753" |
"5625651" | "5627863" | "5631846" |
"5636246" | "5644573" | "5646935" |
"5650997" | "5652772" | "5655068" |
"5659351" | "5666293" | "5673252" |
"5673291" | "5673292" | "5680388" |
"5694389" | "5699365" | "5703873" |
"5715242" | "5719872" | "5726973" |
"5732068" | "5745837" | "5748677" |
"5751766" | "5754650" | "5764706" |
"5765097" | "5768269" | "5768309" |
"5771449" | "5774689" | "5784363" |
"5784597" | "5784683" | "5787483" |
"5790607" | "5793759" | "5793772" |
"5794119" | "5802044" | "5802117" |
"5802173" | "5802241" | "5802278" |
"5809431" | "5815488" | "5815794" |
"5828660" | "5838799" | "5852604" |
"5859876" | "5864621" | "5867489" |
"5867764" | "5878325" | "5896382" |
"5898732" | "5903546" | "5907586" |
"5909436" | "5910970" | "5933454" |
"5943361" | "5946322" | "5956338" |
"5959660" | "5963557" | "5966376" |
"5969584" | "5987014" | "5987061" |
"5991308" | "5995539" | "5999970" |
"6002722" | "6005861" | "6011950" |
"6018528" | "6021158" | "6021423" |

**Ex. 1024.140**

| | | | | | | |
|---|---|---|---|---|---|---|
| | | "6028933" \| "6038251" \| "6041051" \| "6041056" \| "6044107" \| "6055242" \| "6055268" \| "6058307" \| "6064662" \| "6075787" \| "6075972" \| "6091932" \| "6097736" \| "6125139" \| "6128276" \| "6141546" \| "6157669" \| "6201796" \| "6208630" \| "6212225" \| "6219840" \| "6243369" \| "6275990" \| "6279158" \| "6282683").PN. OR ("6292651" \| "6307868" \| "6330241" \| "6334219" \| "6336201" \| "6349138" \| "6356555" \| "6366585" \| "6415133" \| "6418558" \| "6426983" \| "6430417" \| "6434583" \| "6467092" \| "6477354" \| "6487258" \| "6487405" \| "6496488" \| "6496982" \| "6510229" \| "6512737" \| "6535715" \| "6577642" \| "6594322" \| "6603822" \| "6606351" \| "6608835" \| "6662367" \| "6792038" \| "6819709" \| "6937617" \| "7002898" \| "7068678" \| "7069577" \| "7071994" \| "7079549" \| "7123592" \| "7280564" \| "7310522" \| "7352690" \| "7352779" \| "7355963" \| "7355964" \| "7372859" \| "7385916" \| "7391711" \| "7391712" \| "7394753" \| "7400572" \| "7408873" \| "7414960" \| "7414961" \| "7417944" \| "7420913" \| "7420914" \| "7426177" \| "7436812" \| "7440391" \| "7443784" \| "7492791" \| "7539126" \| "RE33900" \| "RE36430").PN. OR ("RE41771").URPN. | | | | |
| S13 | 141 | S12 and (sfp sfp+ xfp x2 xenpak xpa) | US-PGPUB; USPAT; USOCR | OR | ON | 2012/02/11 21:16 |
| S14 | 54 | S13 and @ad<="20030621" | US-PGPUB; USPAT; USOCR | OR | ON | 2012/02/11 21:17 |
| S15 | 2 | S12 and (sfp sfp+ xfp xenpak xpa) | US-PGPUB; USPAT; USOCR | OR | ON | 2012/02/11 21:17 |
| S16 | 725 | "398"$.ccls. and (sfp sfp+ xfp xenpak xpa) | US-PGPUB; USPAT; USOCR | OR | ON | 2012/02/11 21:18 |
| S17 | 47 | S16 and @ad<="20030621" | US-PGPUB; USPAT; USOCR | OR | ON | 2012/02/11 21:18 |
| S18 | 0 | S17 and (qam qpsk ofdm pam m-ary) | US-PGPUB; USPAT | OR | ON | 2012/02/11 21:18 |
| S19 | 5 | S17 and equali$9 and ((clock near recover$6) (CDR)) | US-PGPUB; USPAT; USOCR | OR | ON | 2012/02/11 21:32 |
| S20 | 582 | "385"$.ccls. and (sfp sfp+ xfp xenpak xpa) | US-PGPUB; USPAT; USOCR | OR | ON | 2012/02/11 21:34 |

**Ex. 1024.141**

| | | | | | | |
|---|---|---|---|---|---|---|
| S21 | 3 | S20 and (qam qpsk ofdm pam m-ary) | US-PGPUB; USPAT | OR | ON | 2012/02/11 21:34 |
| S22 | 5619 | (sfp sfp+ xfp xenpak xpa) | US-PGPUB; USPAT; USOCR | OR | ON | 2012/02/11 21:35 |
| S23 | 191 | S22 and (qam qpsk ofdm pam m-ary) | US-PGPUB; USPAT | OR | ON | 2012/02/11 21:35 |
| S24 | 4 | S23 and equali$9 and ((clock near recover$6) (CDR)) and burst$4 | US-PGPUB; USPAT; USOCR | OR | ON | 2012/02/11 21:36 |
| S25 | 257 | S22 and (qam (quadrature near amplitude) qpsk (quadrature near phase) ofdm (orthogonal near frequency) pam (pulse near amplitude) m-ary) | US-PGPUB; USPAT | OR | ON | 2012/02/11 21:37 |
| S26 | 4 | S25 and equali$9 and ((clock near recover$6) (CDR)) and burst$4 | US-PGPUB; USPAT; USOCR | OR | ON | 2012/02/11 21:38 |
| S27 | 6 | 12/512968 | US-PGPUB; USPAT | OR | ON | 2017/04/27 10:09 |
| S28 | 1942 | "398"$.ccls. and ((sfp sfp+ xfp x2 xenpak xpa) pluggable) | US-PGPUB; USPAT; USOCR | OR | ON | 2017/04/27 20:50 |
| S29 | 94 | S28 and @pd<="20030610" | US-PGPUB; USPAT; USOCR | OR | ON | 2017/04/27 20:51 |
| S30 | 14 | (US-20110135312-$ or US-20100158530-$ or US-20070031153-$ or US-20040028408-$ or US-20020181895-$ or US-20020181894-$ or US-20020149821-$).did. or (US-7242868-$ or US-6603822-$ or US-7729617-$ or US-7486894-$ or US-7321612-$ or US-7317769-$ or US-9337948-$).did. | US-PGPUB; USPAT | OR | ON | 2017/04/28 23:24 |
| S31 | 5 | S30 and sfp$ and xfp$ | US-PGPUB; USPAT | OR | ON | 2017/04/28 23:26 |

**4/29/2017 1:05:09 PM**
**C:\Users\abello\Documents\EAST\Workspaces\15095137.wsp**

**Ex. 1024.142**

| Search Notes | Application/Control No. | Applicant(s)/Patent Under Reexamination |
|---|---|---|
| | 15095137 | SOTO ET AL. |
| | **Examiner** | **Art Unit** |
| | AGUSTIN BELLO | 2637 |

## CPC- SEARCHED

| Symbol | Date | Examiner |
|---|---|---|
| | | |

## CPC COMBINATION SETS - SEARCHED

| Symbol | Date | Examiner |
|---|---|---|
| | | |

## US CLASSIFICATION SEARCHED

| Class | Subclass | Date | Examiner |
|---|---|---|---|
| 398 | 135-139 | 4/29/2017 | ab |

## SEARCH NOTES

| Search Notes | Date | Examiner |
|---|---|---|
| "398"$.ccls. and (sfp sfp+ xfp xenpak xpa) | 1/2/2017 | ab |
| See EAST search history printout | 4/29/2017 | ab |

## INTERFERENCE SEARCH

| US Class/ CPC Symbol | US Subclass / CPC Group | Date | Examiner |
|---|---|---|---|
| | | | |

PTO/SB/30EFS (07-14)
Approved for use through 07/31/2016. OMB 0651-0031
U.S. Patent and Trademark Office; U.S. DEPARTMENT OF COMMERCE
Under the Paperwork Reduction Act of 1995, no persons are required to respond to a collection of information unless it contains a valid OMB control number.

# REQUEST FOR CONTINUED EXAMINATION(RCE)TRANSMITTAL
## (Submitted Only via EFS-Web)

| | | | | | | | |
|---|---|---|---|---|---|---|---|
| Application Number | 15/095,137 | Filing Date | 2016-04-10 | Docket Number (if applicable) | UBI-002D | Art Unit | 2637 |
| First Named Inventor | Alexander I. Soto | | | Examiner Name | Bello, Agustin | | |

**This is a Request for Continued Examination (RCE) under 37 CFR 1.114 of the above-identified application.**
Request for Continued Examination (RCE) practice under 37 CFR 1.114 does not apply to any utility or plant application filed prior to June 8, 1995, to any international application that does not comply with the requirements of 35 U.S.C. 371, or to any design application. The Instruction Sheet for this form is located at WWW.USPTO.GOV.

### SUBMISSION REQUIRED UNDER 37 CFR 1.114

Note: If the RCE is proper, any previously filed unentered amendments and amendments enclosed with the RCE will be entered in the order in which they were filed unless applicant instructs otherwise. If applicant does not wish to have any previously filed unentered amendment(s) entered, applicant must request non-entry of such amendment(s).

☐ Previously submitted. If a final Office action is outstanding, any amendments filed after the final Office action may be considered as a submission even if this box is not checked.

- ☐ Consider the arguments in the Appeal Brief or Reply Brief previously filed on _____
- ☐ Other _____

☒ Enclosed

- ☒ Amendment/Reply
- ☒ Information Disclosure Statement (IDS)
- ☐ Affidavit(s)/ Declaration(s)
- ☐ Other _____

### MISCELLANEOUS

☐ Suspension of action on the above-identified application is requested under 37 CFR 1.103(c) for a period of months _____
(Period of suspension shall not exceed 3 months; Fee under 37 CFR 1.17(i) required)

☐ Other _____

### FEES

☒ **The RCE fee under 37 CFR 1.17(e) is required by 37 CFR 1.114 when the RCE is filed.**
The Director is hereby authorized to charge any underpayment of fees, or credit any overpayments, to Deposit Account No _____

### SIGNATURE OF APPLICANT, ATTORNEY, OR AGENT REQUIRED

Patent Practitioner Signature

X Applicant Signature

**Ex. 1024.144**

PTO/SB/30EFS (07-14)
Approved for use through 07/31/2016. OMB 0651-0031
U.S. Patent and Trademark Office; U.S. DEPARTMENT OF COMMERCE
Under the Paperwork Reduction Act of 1995, no persons are required to respond to a collection of information unless it contains a valid OMB control number.

| Applicant Signature | | | |
|---|---|---|---|
| Applicant 1 | | Remove | |
| Signature | /Alexander Soto/ | Date (YYYY-MM-DD) | 2017-03-31 |
| Name | Alexander Soto | | |
| Applicant 2 | | Remove | |
| Signature | /Walter Soto/ | Date (YYYY-MM-DD) | 2017-03-31 |
| Name | Walter Soto | | |
| Click ADD for additional Applicant Signature | | Add | |

This collection of information is required by 37 CFR 1.114. The information is required to obtain or retain a benefit by the public which is to file (and by the USPTO to process) an application. Confidentiality is governed by 35 U.S.C. 122 and 37 CFR 1.11 and 1.14. This collection is estimated to take 12 minutes to complete, including gathering, preparing, and submitting the completed application form to the USPTO. Time will vary depending upon the individual case. Any comments on the amount of time you require to complete this form and/or suggestions for reducing this burden, should be sent to the Chief Information Officer, U.S. Patent and Trademark Office, U.S. Department of Commerce, P.O. Box 1450, Alexandria, VA 22313-1450.

*If you need assistance in completing the form, call 1-800-PTO-9199 and select option 2.*

# Privacy Act Statement

The Privacy Act of 1974 (P.L. 93-579) requires that you be given certain information in connection with your submission of the attached form related to a patent application or patent. Accordingly, pursuant to the requirements of the Act, please be advised that: (1) the general authority for the collection of this information is 35 U.S.C. 2(b)(2); (2) furnishing of the information solicited is voluntary; and (3) the principal purpose for which the information is used by the U.S. Patent and Trademark Office is to process and/or examine your submission related to a patent application or patent. If you do not furnish the requested information, the U.S. Patent and Trademark Office may not be able to process and/or examine your submission, which may result in termination of proceedings or abandonment of the application or expiration of the patent.

The information provided by you in this form will be subject to the following routine uses:

1. The information on this form will be treated confidentially to the extent allowed under the Freedom of Information Act (5 U.S.C. 552) and the Privacy Act (5 U.S.C. 552a). Records from this system of records may be disclosed to the Department of Justice to determine whether the Freedom of Information Act requires disclosure of these records.

2. A record from this system of records may be disclosed, as a routine use, in the course of presenting evidence to a court, magistrate, or administrative tribunal, including disclosures to opposing counsel in the course of settlement negotiations.

3. A record in this system of records may be disclosed, as a routine use, to a Member of Congress submitting a request involving an individual, to whom the record pertains, when the individual has requested assistance from the Member with respect to the subject matter of the record.

4. A record in this system of records may be disclosed, as a routine use, to a contractor of the Agency having need for the information in order to perform a contract. Recipients of information shall be required to comply with the requirements of the Privacy Act of 1974, as amended, pursuant to 5 U.S.C. 552a(m).

5. A record related to an International Application filed under the Patent Cooperation Treaty in this system of records may be disclosed, as a routine use, to the International Bureau of the World Intellectual Property Organization, pursuant to the Patent Cooperation Treaty.

6. A record in this system of records may be disclosed, as a routine use, to another federal agency for purposes of National Security review (35 U.S.C. 181) and for review pursuant to the Atomic Energy Act (42 U.S.C. 218(c)).

7. A record from this system of records may be disclosed, as a routine use, to the Administrator, General Services, or his/her designee, during an inspection of records conducted by GSA as part of that agency's responsibility to recommend improvements in records management practices and programs, under authority of 44 U.S.C. 2904 and 2906. Such disclosure shall be made in accordance with the GSA regulations governing inspection of records for this purpose, and any other relevant (i.e., GSA or Commerce) directive. Such disclosure shall not be used to make determinations about individuals.

8. A record from this system of records may be disclosed, as a routine use, to the public after either publication of the application pursuant to 35 U.S.C. 122(b) or issuance of a patent pursuant to 35 U.S.C. 151. Further, a record may be disclosed, subject to the limitations of 37 CFR 1.14, as a routine use, to the public if the record was filed in an application which became abandoned or in which the proceedings were terminated and which application is referenced by either a published application, an application open to public inspections or an issued patent.

9. A record from this system of records may be disclosed, as a routine use, to a Federal, State, or local law enforcement agency, if the USPTO becomes aware of a violation or potential violation of law or regulation.

| | |
|---|---|
| **PATENTS**<br>**Docket No. UBI-002D** | |
| **IN THE UNITED STATES PATENT AND TRADEMARK OFFICE** | |
| In re Application of:<br>**Alexander I. Soto et al.** | Group Art Unit: **2637** |
| Patent Application No.: **15/095,137** | |
| Filed on: **April 10, 2016** | |
| For: **SYSTEM AND METHOD FOR PERFORMING HIGH-SPEED COMMUNICATIONS OVER FIBER OPTICAL NETWORKS** | Examiner: Bello, Agustin |

Commissioner for Patents
Mail Stop Amendment
PO Box 1450
Alexandria, VA 22313-4150

**AMENDMENT AFTER FINAL PER 37 C.F.R. §1.116**

Responsive to the Final Office Action mailed on Jan. 6, 2017, please enter the following Amendment and Response in the above-entitled Patent Application. Applicants respectfully request that the following amendments be entered and remarks be considered, without prejudice or disclaimer to continued examination on the merits. Applicants submit that the Application is now in condition for allowance and respectfully request such action.

## AMENDMENTS TO THE CLAIMS

Kindly enter the claim amendments as set forth in the following claim listing presented in accordance with 37 C.F.R. §1.121(c)(1):

**Complete Listing of Claims:**

What is claimed is:

1.) (Currently Amended) A method for m-ary modulation communication ~~across an optical network~~ by a[[~~n~~]] pluggable optical transceiver module comprising of:

receiving a first electrical binary data signal through a system interface of the pluggable optical transceiver module;

converting the first electrical binary data signal in the pluggable optical transceiver module to a first electrical m-ary modulation signal;

amplifying the first electrical m-ary modulation signal to drive an optical transmitter ~~of~~in the pluggable optical transceiver module;

emitting a first optical signal on a first wavelength responsive to and representative of the amplified first electrical m-ary modulation signal from the optical transmitter ~~of~~in the pluggable optical transceiver module;

receiving a second optical signal on a second wavelength and producing an electrical signal from an optical detector ~~of~~in the pluggable optical transceiver module;

amplifying the electrical signal to facilitate clock and data recovery in the pluggable optical transceiver module;

~~equalizing the amplified electrical signal and~~ recovering a clock data information from the amplified electrical signal to produce a second m-ary modulation signal in the pluggable optical transceiver module;

demodulating the second m-ary modulation signal ~~according~~ to a second electrical binary data signal in the pluggable optical transceiver module; and

transmitting the second electrical binary data signal through the system interface of the pluggable optical transceiver module.

2.) (Currently Amended) The method of claim 1, whereby the form factor of the pluggable optical transceiver module is a pluggable form factor standard~~selected from the group consisting of: SFP; SFP+; XFP; X2; XENPAK; XPA; and 300 pin transceiver form factors~~.

3.) (Currently Amended) The method of claim 1, whereby the m-ary modulation is a m-ary pulse amplitude modulation communication method that uses two or more bits per symbol for communication. ~~selected from the group consisting of:~~

~~quadrature amplitude modulation (QAM);~~
~~QAM-32;~~
~~QAM-256;~~
~~quadrature phase shift keying (QPSK);~~
~~differential QPSK;~~
~~return-to-zero QPSK;~~
~~dual-polarized QPSK;~~
~~orthogonal frequency division multiplexing (OFDM);~~
~~pulse amplitude modulation (PAM);~~
~~PAM-5; and~~
~~PAM-17.~~

4.) (Currently Amended) The method of claim 6, further comprising of:

storing a first set of coefficients of the decision directed equalization to apply to a subsequent clock data information in the pluggable optical transceiver module~~which improve processing of the electrical signal~~, and

loading the first set of coefficients of the decision directed equalization to filter noise.

5.) (Currently Amended) The method of claim 7, further comprising of:

storing a first set of coefficients of the blind equalization to apply to a subsequent clock data information in the pluggable optical transceiver module, and

loading ~~a second~~the first set of stored coefficients of the blind equalization to filter noise~~which improve processing of the electrical signal~~.

6.) (New) The method of claim 1, further comprising performing decision directed equalization on the clock data information to remove noise in the pluggable optical transceiver module.

7.) (New) The method of claim 1, further comprising performing a blind equalization on the clock data information to remove noise in the pluggable optical transceiver module.

8.) (New) The method of claim 2, whereby the pluggable form factor standard of the pluggable optical transceiver module is an SFP form factor or SFP+ form factor standard.

9.) (New) The method of claim 2, whereby the pluggable form factor standard of the pluggable optical transceiver module is an XFP form factor standard.

10.) (New) The method of claim 1, whereby the first electrical binary data signal and second electrical binary data signal are parallel electrical binary data signals.

11.) (New) The method of claim 1, whereby the first optical signal emitted by the pluggable optical transceiver module is dual polarized.

12.) (New) The method of claim 1, whereby the second optical signal received by the pluggable optical transceiver module is dual polarized.

13.) (New) The method of claim 1, whereby the m-ary modulation is a m-ary quadrature amplitude modulation communication method that uses two or more bits per symbol for communication.

14.) (New) The method of claim 1, whereby the m-ary modulation is a m-ary quadrature phase shift keying modulation communication method that uses two or more bits per symbol for communication.

15.) (New) The method of claim 1, whereby the m-ary modulation is an orthogonal frequency division multiplexing modulation communication method that uses two or more bits per symbol for communication.

16.) (New) The method of claim 1, further comprising coding the first electrical binary data signal and decoding the second electrical binary signal according to an error correcting code in the pluggable optical transceiver module.

17.) (New) The method of claim 16, whereby the error correcting code is a convolutional code.

18.) (New) The method of claim 16, whereby the error correcting code is a forward error correcting (FEC) code.

19.) (New) The method of claim 16, whereby the error correcting code is a trellis code.

20.) (New) The method of claim 16, whereby the error correcting code is a Reed-Solomon code.

21.) (New) The method of claim 16, whereby the error correcting code is a low-density parity-check (LDPC) code.

## REMARKS

**Introduction:** Applicants herewith amend claims 1-5, without prejudice, and add new claims 6-21. These amended and new claims are fully supported in the Specification, Drawings, and Claims of the Application. Applicants respectfully request reconsideration and withdrawal of the rejections to claims 1-5, as amended, and request consideration to new claims 6-21 and the consideration of Applicants' following remarks.

**Discussion regarding claims 1 and 3-5:** In the Final Office Action mailed on Jan 6, 2017 states claims 1 and 3-5 as being anticipated by Brede et al ("Brede") (US 6,603,822 B2). Applicants herewith amend claims 1 and 3-5. Applicants respectfully traverse these rejections for at least the reason that they have not stated a proper *prima facie* case for anticipation for at least the reasons the reasons laid out below.

The OA does not explicitly conflate but implicitly conflate Applicants' claimed pluggable optical transceiver module with Brede's host digital terminal (HDT) as shown in Fig. 3. Brede describes Fig. 3 as:

> *"a detailed block diagram of the host digital terminal (HDT) <u>with associated transmitters and receivers</u> of the system of Fig. 1."* (col. 14, lines 44-45) (emphasis added)

Brede's original assignment by the inventors of Brede is to a company called ADC Telecommunications, Inc of Eden Prairie, MN where the Brede inventors also lived near. Referring now to the ADC Telecommunication publication from 2004 titled "Fiber to the Premises" which provides an acronym key table (page 8) that discloses HDT stands for Host digital terminal (same as Brede) and OLT stands for Optical line termination. Referring now to Figure 2 on page 10 of this ADC publication, which appears substantially similar to Brede's Fig. 1, reveals that an HDT is equivalent to an OLT, just an older term for an OLT:

> *"**<u>OLT (FORMERLY HDT)</u>**"* (element on left side in Figure 2) (emphasis added)

Thus Brede HDT 12 is an OLT not a pluggable optical transceiver module as in Applicants' claims. Furthermore, Brede's Fig. 3 has a dotted line encompassing different elements to designate element 12. From Fig. 1, we see that element 12 refers to an OLT (i.e,

HDT). In the final OA, the Examiner concedes that Brede's element 14 and 16 in Fig. 3 are optical transmitters and optical receivers, respectively (page 3). However, in Fig. 3 Brede has clearly distinguished element 12, the OLT, as distinct from the optical transmitters 14 and optical receivers 16. While Applicants' acknowledge that an OLT is a device that transmits and receives and thus can be considered a transceiver, however, the Brede optical elements (14, 16 of Fig. 3) are described as distinct elements that transmit and receive separately and NOT as a transceiver as in Applicants' claims. Additionally, these optical elements (14, 16) are connected to the OLT 12 via a coaxial cable interface (22, 28), again distinguished as distinct from the OLT 12 and again NOT as a pluggable optical transceiver module as in the Applicants' claims. Given the disclosure of the references above, the rejection fails to present each and every element of the Applicants' claimed invention and therefore for at least this reason alone the rejection should be withdrawn.

The relevant part of 35 U .S.C. § 102(b) recites that "A person shall be entitled to an invention, unless - ... the invention was patented or described in a printed publication in this or a foreign country or in public use or on sale in this country, more than one year prior to the date of the application for patent in the United States." Anticipation under 35 U .S.C. §10 2(b) requires that each and every element of the claimed invention be present, either expressly or inherently, in a single prior art reference. EMI Group N. Am., Inc., v. Cypress Semiconductor Corp., 268 F.3d 1342, 1350 (Fed. Cir. 200 1). Anticipation must be proved by substantial evidence. In re Crish,_393 F.3d 1253, 73 USPQ2d 1364 (Fed. Cir. 2004).

Additionally the rejection relies on an implicit conclusory statement conflating Applicants' pluggable optical transceiver module with an OLT without any support or substantial evidence for this conflation. On the contrary, the references teach away from this conflation. It is respectfully submitted for at least this reason alone, the rejection failed to establish a *prima facie* case of anticipation and should be withdrawn along with the finality of the OA. Further, because the final OA failed to establish a *prima facie* case of anticipation, any rejection in a subsequent Office Action providing adequate reasoning(s) would be presented for the first time on the record and as such a subsequent Office Action cannot be made final.

Applicants respectfully request reconsideration and withdrawal of rejections to claims 1 and 3-5, as currently amended. Applicants respectfully suggest these claims are now in condition for allowance.

**Discussion regarding claim 2:** In the Final Office Action mailed on Jan 6, 2017 states claim 2 as being unpatentable over Brede et al and in further view of Aronson ("Aronson") (Pub. No. US 2007/0031153). Applicants herewith amend claim 2. Applicants respectfully traverse this rejection because it has not stated a proper *prima facie* case for obviousness for at least the reasons laid out above in regards to claims 1 from which claim 2 depends and for at least the reasons below.

The rejection states that Brede fails to teach a form factor, however findings in Aronson show such feature. However, the rejection fails to suggest explicitly or implicitly any similarities between Brede's OLT 12 of Fig. 3 comprising for example of a plurality of Coax Master Units, Shelf controller units, power supply units, and DS1Us with Aronson's transceiver 200. On the contrary, Aronson's transceiver 200 comprises of simply of optical transmitter 215, optical receiver 225 and Aronson's novelty eye opener circuitry 205a/b and therefore teaches away from such a combination.

In an appeal involving a rejection under 35 U .S.C. § 103, an examiner bears the initial burden of establishing *prima facie* obviousness. See In re Rijckaert, 9 F.3d 1531, 1532, 28 USPQ2d 1955, 1956 (Fed. Cir. 1993). To support a *prima facie* conclusion of obviousness, the prior art must disclose or suggest all the limitations of the claimed invention. See In re Lowry, 32 F.3d 1579, 1582, 32 USPQ2d 1 031, 1034 (Fed. Cir. 1994). If the examiner has established a *prima facie* case of obviousness, the burden of going forward then shifts to the applicant to overcome the *prima facie* case with argument and/or evidence. Obviousness, is then determined on the basis of the evidence as a whole and the relative persuasiveness of the arguments. This inquiry requires (a) determining the scope and contents of the prior art; (b) ascertaining the differences between the prior art and the claims in issue; (c) resolving the level of ordinary skill in the pertinent art; and (d) evaluating evidence of secondary consideration. See KSR Int'l Co. v. Teleflex Inc., No. 127 S. Ct. 1727, 1728 (2007) (citing Graham v. John Deere, 383 U.S. I, 17-18, 148 USPQ 459,467 (1966)). If all claim limitations are found in a number of prior art references, the fact finder must determine whether there was an apparent reason to combine the known elements in the fashion claimed. See KSR, 1741. This analysis should be made explicit. KSR at 1741 (citing In re Kahn, 441 F. 3d 977, 988 (Fed. Cir. 2006): "[R]ejections on obviousness grounds cannot be sustained by mere conclusory statements; instead, there must be some

articulated reasoning with some rational underpinning to support the legal conclusion of obviousness").

Furthermore, the stated motivation to combine is *"in order to meet design requirements, budgetary requirements, or performance requirements such as achieving 10 Gb/s*". However, the rejection fails to articulate with some rational underpinning why any of the form factors well known in the art are needed to meet unspecified design requirements, budgetary requirements or the performance requirement such as 10 Gb/s. On the contrary, it is entirely rational to assume that it would be easier and cheaper to meet design requirements or budgetary requirements without limitation to a form factor, particularly in view of the relative minimal elements comprising Aronson's transceiver 200 and the plurality of complex elements of Brede's OLT 12. Furthermore, the performance requirement such as 10 Gb/s inherently has no rational limitation to a form factor as there are many ways to achieve such performance without limiting the form factor to an XFP optical transceiver module as claimed by the Applicants'. Therefore, Applicants' suggest that no rational motivation to combine references has been presented to support a prima facie case of obviousness and for at least this reason the rejection should be withdrawn.

Alternatively, the rejection argument seems to say no more than that a skilled artisan, once presented with these references would have understood that they *could be* combined. And that is not enough: it does not imply a motivation to pick out these references and combine them to arrive at Applicants' claim. See Belden Inc. v. Berk-Tek LLC, 805 F.3d 1064, 1073 (Fed. Cir. 2015) "[O]bviousness concerns whether a skilled artisan not only *could have* made but *would have* been motivated to make the combinations or modifications of prior art to arrive at the claimed invention."; InTouch Techs., Inc. v. VGO Communications, Inc., 751 F.3d 1327, 1352 (Fed. Cir. 2014). Accordingly, Applicants' respectfully submit that the rejection is improper and respectfully suggest that the rejection should be withdrawn.

Applicants respectfully request reconsideration and withdrawal of rejection to claim 2, as amended. Applicants respectfully suggest this claim is in condition for allowance.

**Conclusion**: In view of all the above, Applicants respectfully submits that certain clear and distinct differences as discussed exist between the present invention as now claimed and the prior art as a whole. These differences are more than sufficient that the present invention as now claimed would not have been anticipated nor rendered obvious given the prior art. Rather the present invention as a whole is distinguishable, and thereby allowable over the prior art.

Should the Examiner believe that a telephone conference with the undersigned would assist in resolving any issues pertaining to the allowability of the above-identified application, please contact the undersigned at the telephone number listed below.

Respectfully submitted,

/Alexander Soto/

Alexander Soto
Customer No. 93749
7673 Hazard Center Dr.
San Diego, CA 92108
858-527-2397
Alexander.I.Soto@gmail.com

# Electronic Patent Application Fee Transmittal

| | |
|---|---|
| **Application Number:** | 15095137 |
| **Filing Date:** | 10-Apr-2016 |
| **Title of Invention:** | SYSTEM AND METHOD FOR PERFORMING HIGH-SPEED COMMUNICATIONS OVER FIBER OPTICAL NETWORKS |
| **First Named Inventor/Applicant Name:** | Alexander Soto |
| **Filer:** | Alexander Ivan Soto |
| **Attorney Docket Number:** | UBI-002D |

Filed as Small Entity

**Filing Fees for Utility under 35 USC 111(a)**

| Description | Fee Code | Quantity | Amount | Sub-Total in USD($) |
|---|---|---|---|---|
| **Basic Filing:** | | | | |
| **Pages:** | | | | |
| **Claims:** | | | | |
| **Miscellaneous-Filing:** | | | | |
| **Petition:** | | | | |
| **Patent-Appeals-and-Interference:** | | | | |
| **Post-Allowance-and-Post-Issuance:** | | | | |
| **Extension-of-Time:** | | | | |

| Description | Fee Code | Quantity | Amount | Sub-Total in USD($) |
|---|---|---|---|---|
| **Miscellaneous:** | | | | |
| RCE- 1st Request | 2801 | 1 | 600 | 600 |
| | | **Total in USD ($)** | | **600** |

# Electronic Acknowledgement Receipt

| | |
|---|---|
| **EFS ID:** | 28845576 |
| **Application Number:** | 15095137 |
| **International Application Number:** | |
| **Confirmation Number:** | 5317 |
| **Title of Invention:** | SYSTEM AND METHOD FOR PERFORMING HIGH-SPEED COMMUNICATIONS OVER FIBER OPTICAL NETWORKS |
| **First Named Inventor/Applicant Name:** | Alexander Soto |
| **Customer Number:** | 93749 |
| **Filer:** | Alexander Ivan Soto |
| **Filer Authorized By:** | |
| **Attorney Docket Number:** | UBI-002D |
| **Receipt Date:** | 05-APR-2017 |
| **Filing Date:** | 10-APR-2016 |
| **Time Stamp:** | 18:59:05 |
| **Application Type:** | Utility under 35 USC 111(a) |

## Payment information:

| | |
|---|---|
| Submitted with Payment | yes |
| Payment Type | CARD |
| Payment was successfully received in RAM | $600 |
| RAM confirmation Number | 040617INTEFSW19002200 |
| Deposit Account | |
| Authorized User | |

The Director of the USPTO is hereby authorized to charge indicated fees and credit any overpayment as follows:

## File Listing:

| Document Number | Document Description | File Name | File Size(Bytes)/ Message Digest | Multi Part /.zip | Pages (if appl.) |
|---|---|---|---|---|---|
| 1 | Request for Continued Examination (RCE) | UBI-002D-RCE-sb0030efs.pdf | 1350072<br>3d340e44eddd3a029f55b42be3dfe12841fdc4a2 | no | 3 |
| **Warnings:** | | | | | |
| **Information:** | | | | | |
| 2 | Amendment Submitted/Entered with Filing of CPA/RCE | After_Final_Amendment_UBI-002D_04Apr2017.pdf | 158847<br>cf546dbaada0380021348f4918302568623 52a09 | no | 10 |
| **Warnings:** | | | | | |
| **Information:** | | | | | |
| 3 | Fee Worksheet (SB06) | fee-info.pdf | 30664<br>d0b754aaf63e04226c10d8269640bbfceee 54130 | no | 2 |
| **Warnings:** | | | | | |
| **Information:** | | | | | |
| | | **Total Files Size (in bytes):** | 1539583 | | |

**This Acknowledgement Receipt evidences receipt on the noted date by the USPTO of the indicated documents, characterized by the applicant, and including page counts, where applicable. It serves as evidence of receipt similar to a Post Card, as described in MPEP 503.**

**<u>New Applications Under 35 U.S.C. 111</u>**
**If a new application is being filed and the application includes the necessary components for a filing date (see 37 CFR 1.53(b)-(d) and MPEP 506), a Filing Receipt (37 CFR 1.54) will be issued in due course and the date shown on this Acknowledgement Receipt will establish the filing date of the application.**

**<u>National Stage of an International Application under 35 U.S.C. 371</u>**
**If a timely submission to enter the national stage of an international application is compliant with the conditions of 35 U.S.C. 371 and other applicable requirements a Form PCT/DO/EO/903 indicating acceptance of the application as a national stage submission under 35 U.S.C. 371 will be issued in addition to the Filing Receipt, in due course.**

**<u>New International Application Filed with the USPTO as a Receiving Office</u>**
**If a new international application is being filed and the international application includes the necessary components for an international filing date (see PCT Article 11 and MPEP 1810), a Notification of the International Application Number and of the International Filing Date (Form PCT/RO/105) will be issued in due course, subject to prescriptions concerning national security, and the date shown on this Acknowledgement Receipt will establish the international filing date of the application.**

PTO/SB/08b (07-09)
Approved for use through 07/31/2016. OMB 0651-0031
U.S. Patent and Trademark Office; U.S. DEPARTMENT OF COMMERCE
Under the Paperwork Reduction Act of 1995, no persons are required to respond to a collection of information unless it contains a valid OMB control number.

Substitute for form 1449/PTO

# INFORMATION DISCLOSURE STATEMENT BY APPLICANT

*(Use as many sheets as necessary)*

Sheet 1 of 1

| | Complete if Known |
|---|---|
| **Application Number** | 15/095,137 |
| **Filing Date** | April 10, 2016 |
| **First Named Inventor** | Alexander Soto |
| Art Unit | 2637 |
| Examiner Name | Bello, Agustin |
| Attorney Docket Number | UBI-002D |

**NON PATENT LITERATURE DOCUMENTS**

| Examiner Initials* | Cite No.[1] | Include name of the author (in CAPITAL LETTERS), title of the article (when appropriate), title of the item (book, magazine, journal, serial, symposium, catalog, etc.), date, page(s), volume-issue number(s), publisher, city and/or country where published. | T[2] |
|---|---|---|---|
| | | ADC Telecommunications, "Fiber to the Premisis", September 2004. | |
| | | XFP transceiver. (n.d.). In Wikipedia. Retrieved March 30, 2017, from https://en.wikipedia.org/w/index.php?title=XFP_transceiver&oldid=752082519 | |
| | | Opltical line termination. (n.d.). In Wikipedia. Retrieved March 30, 2017, from https://en.wikipedia.org/w/index.php?title=Optical_line_termination&oldid=72809026 | |
| | | | |
| | | | |
| | | | |
| | | | |
| | | | |
| | | | |
| | | | |

| Examiner Signature | | Date Considered | |
|---|---|---|---|

*EXAMINER: Initial if reference considered, whether or not citation is in conformance with MPEP 609. Draw line through citation if not in conformance and not considered. Include copy of this form with next communication to applicant.

[1] Applicant's unique citation designation number (optional). [2] Applicant is to place a check mark here if English language Translation is attached.

This collection of information is required by 37 CFR 1.98. The information is required to obtain or retain a benefit by the public which is to file (and by the USPTO to process) an application. Confidentiality is governed by 35 U.S.C. 122 and 37 CFR 1.14. This collection is estimated to take 2 hours to complete, including gathering, preparing, and submitting the completed application form to the USPTO. Time will vary depending upon the individual case. Any comments on the amount of time you require to complete this form and/or suggestions for reducing this burden, should be sent to the Chief Information Officer, U.S. Patent and Trademark Office, P.O. Box 1450, Alexandria, VA 22313-1450. DO NOT SEND FEES OR COMPLETED FORMS TO THIS ADDRESS. **SEND TO: Commissioner for Patents, P.O. Box 1450, Alexandria, VA 22313-1450.**

*If you need assistance in completing the form, call 1-800-PTO-9199 (1-800-786-9199) and select option 2.*

# Privacy Act Statement

The **Privacy Act of 1974 (P.L. 93-579)** requires that you be given certain information in connection with your submission of the attached form related to a patent application or patent. Accordingly, pursuant to the requirements of the Act, please be advised that: (1) the general authority for the collection of this information is 35 U.S.C. 2(b)(2); (2) furnishing of the information solicited is voluntary; and (3) the principal purpose for which the information is used by the U.S. Patent and Trademark Office is to process and/or examine your submission related to a patent application or patent. If you do not furnish the requested information, the U.S. Patent and Trademark Office may not be able to process and/or examine your submission, which may result in termination of proceedings or abandonment of the application or expiration of the patent.

The information provided by you in this form will be subject to the following routine uses:

1. The information on this form will be treated confidentially to the extent allowed under the Freedom of Information Act (5 U.S.C. 552) and the Privacy Act (5 U.S.C 552a). Records from this system of records may be disclosed to the Department of Justice to determine whether disclosure of these records is required by the Freedom of Information Act.
2. A record from this system of records may be disclosed, as a routine use, in the course of presenting evidence to a court, magistrate, or administrative tribunal, including disclosures to opposing counsel in the course of settlement negotiations.
3. A record in this system of records may be disclosed, as a routine use, to a Member of Congress submitting a request involving an individual, to whom the record pertains, when the individual has requested assistance from the Member with respect to the subject matter of the record.
4. A record in this system of records may be disclosed, as a routine use, to a contractor of the Agency having need for the information in order to perform a contract. Recipients of information shall be required to comply with the requirements of the Privacy Act of 1974, as amended, pursuant to 5 U.S.C. 552a(m).
5. A record related to an International Application filed under the Patent Cooperation Treaty in this system of records may be disclosed, as a routine use, to the International Bureau of the World Intellectual Property Organization, pursuant to the Patent Cooperation Treaty.
6. A record in this system of records may be disclosed, as a routine use, to another federal agency for purposes of National Security review (35 U.S.C. 181) and for review pursuant to the Atomic Energy Act (42 U.S.C. 218(c)).
7. A record from this system of records may be disclosed, as a routine use, to the Administrator, General Services, or his/her designee, during an inspection of records conducted by GSA as part of that agency's responsibility to recommend improvements in records management practices and programs, under authority of 44 U.S.C. 2904 and 2906. Such disclosure shall be made in accordance with the GSA regulations governing inspection of records for this purpose, and any other relevant (*i.e.*, GSA or Commerce) directive. Such disclosure shall not be used to make determinations about individuals.
8. A record from this system of records may be disclosed, as a routine use, to the public after either publication of the application pursuant to 35 U.S.C. 122(b) or issuance of a patent pursuant to 35 U.S.C. 151. Further, a record may be disclosed, subject to the limitations of 37 CFR 1.14, as a routine use, to the public if the record was filed in an application which became abandoned or in which the proceedings were terminated and which application is referenced by either a published application, an application open to public inspection or an issued patent.
9. A record from this system of records may be disclosed, as a routine use, to a Federal, State, or local law enforcement agency, if the USPTO becomes aware of a violation or potential violation of law or regulation.

# Electronic Acknowledgement Receipt

| | |
|---|---|
| **EFS ID:** | 28845618 |
| **Application Number:** | 15095137 |
| **International Application Number:** | |
| **Confirmation Number:** | 5317 |
| **Title of Invention:** | SYSTEM AND METHOD FOR PERFORMING HIGH-SPEED COMMUNICATIONS OVER FIBER OPTICAL NETWORKS |
| **First Named Inventor/Applicant Name:** | Alexander Soto |
| **Customer Number:** | 93749 |
| **Filer:** | Alexander Ivan Soto |
| **Filer Authorized By:** | |
| **Attorney Docket Number:** | UBI-002D |
| **Receipt Date:** | 05-APR-2017 |
| **Filing Date:** | 10-APR-2016 |
| **Time Stamp:** | 19:04:09 |
| **Application Type:** | Utility under 35 USC 111(a) |

## Payment information:

| | |
|---|---|
| Submitted with Payment | no |

## File Listing:

| Document Number | Document Description | File Name | File Size(Bytes)/ Message Digest | Multi Part /.zip | Pages (if appl.) |
|---|---|---|---|---|---|
| 1 | Information Disclosure Statement (IDS) Form (SB08) | UBI-002D_IDS.pdf | 252366<br>a4309440f3113ba6894b645e0dc40c01e3e2ee97 | no | 2 |

**Warnings:**

| | | | | | |
|---|---|---|---|---|---|
| **Information:** | | | | | |
| This is not an USPTO supplied IDS fillable form | | | | | |
| 2 | Non Patent Literature | telecom-planning-guide-fiber-to-the-premises-1302422.pdf | 171417<br>2179edef4a81ecee8dec933b94a98a4b4bc4b148 | no | 21 |
| **Warnings:** | | | | | |
| **Information:** | | | | | |
| 3 | Non Patent Literature | XFP-IDS_sorce.pdf | 145114<br>e87537caad80abe52edec2509a5fddedbf463ff5 | no | 3 |
| **Warnings:** | | | | | |
| **Information:** | | | | | |
| 4 | Non Patent Literature | OLT-IDS_sorce.pdf | 110747<br>ee9184c5b232346039de50d04594a6d755b80835 | no | 2 |
| **Warnings:** | | | | | |
| **Information:** | | | | | |
| | | | **Total Files Size (in bytes):** | 679644 | |

**This Acknowledgement Receipt evidences receipt on the noted date by the USPTO of the indicated documents, characterized by the applicant, and including page counts, where applicable. It serves as evidence of receipt similar to a Post Card, as described in MPEP 503.**

**New Applications Under 35 U.S.C. 111**
**If a new application is being filed and the application includes the necessary components for a filing date (see 37 CFR 1.53(b)-(d) and MPEP 506), a Filing Receipt (37 CFR 1.54) will be issued in due course and the date shown on this Acknowledgement Receipt will establish the filing date of the application.**

**National Stage of an International Application under 35 U.S.C. 371**
**If a timely submission to enter the national stage of an international application is compliant with the conditions of 35 U.S.C. 371 and other applicable requirements a Form PCT/DO/EO/903 indicating acceptance of the application as a national stage submission under 35 U.S.C. 371 will be issued in addition to the Filing Receipt, in due course.**

**New International Application Filed with the USPTO as a Receiving Office**
**If a new international application is being filed and the international application includes the necessary components for an international filing date (see PCT Article 11 and MPEP 1810), a Notification of the International Application Number and of the International Filing Date (Form PCT/RO/105) will be issued in due course, subject to prescriptions concerning national security, and the date shown on this Acknowledgement Receipt will establish the international filing date of the application.**

# Electronic Patent Application Fee Transmittal

| | |
|---|---|
| **Application Number:** | 15095137 |
| **Filing Date:** | 10-Apr-2016 |
| **Title of Invention:** | SYSTEM AND METHOD FOR PERFORMING HIGH-SPEED COMMUNICATIONS OVER FIBER OPTICAL NETWORKS |
| **First Named Inventor/Applicant Name:** | Alexander Soto |
| **Filer:** | Alexander Ivan Soto |
| **Attorney Docket Number:** | UBI-002D |

Filed as Small Entity

**Filing Fees for Utility under 35 USC 111(a)**

| Description | Fee Code | Quantity | Amount | Sub-Total in USD($) |
|---|---|---|---|---|
| **Basic Filing:** | | | | |
| **Pages:** | | | | |
| **Claims:** | | | | |
| CLAIMS IN EXCESS OF 20 | 2202 | 1 | 40 | 40 |
| **Miscellaneous-Filing:** | | | | |
| **Petition:** | | | | |
| **Patent-Appeals-and-Interference:** | | | | |
| **Post-Allowance-and-Post-Issuance:** | | | | |

| Description | Fee Code | Quantity | Amount | Sub-Total in USD($) |
|---|---|---|---|---|
| **Extension-of-Time:** | | | | |
| **Miscellaneous:** | | | | |
| | | **Total in USD ($)** | | **40** |

# Electronic Acknowledgement Receipt

| | |
|---|---|
| **EFS ID:** | 28845657 |
| **Application Number:** | 15095137 |
| **International Application Number:** | |
| **Confirmation Number:** | 5317 |
| **Title of Invention:** | SYSTEM AND METHOD FOR PERFORMING HIGH-SPEED COMMUNICATIONS OVER FIBER OPTICAL NETWORKS |
| **First Named Inventor/Applicant Name:** | Alexander Soto |
| **Customer Number:** | 93749 |
| **Filer:** | Alexander Ivan Soto |
| **Filer Authorized By:** | |
| **Attorney Docket Number:** | UBI-002D |
| **Receipt Date:** | 05-APR-2017 |
| **Filing Date:** | 10-APR-2016 |
| **Time Stamp:** | 19:10:32 |
| **Application Type:** | Utility under 35 USC 111(a) |

## Payment information:

| | |
|---|---|
| Submitted with Payment | yes |
| Payment Type | CARD |
| Payment was successfully received in RAM | $40 |
| RAM confirmation Number | 040617INTEFSW19113600 |
| Deposit Account | |
| Authorized User | |

The Director of the USPTO is hereby authorized to charge indicated fees and credit any overpayment as follows:

## File Listing:

| Document Number | Document Description | File Name | File Size(Bytes)/ Message Digest | Multi Part /.zip | Pages (if appl.) |
|---|---|---|---|---|---|
| 1 | Fee Worksheet (SB06) | fee-info.pdf | 30472<br>7b86f1b372b2fa3e9f849806454a06e12076e340 | no | 2 |

**Warnings:**

**Information:**

| | |
|---|---|
| **Total Files Size (in bytes):** | 30472 |

**This Acknowledgement Receipt evidences receipt on the noted date by the USPTO of the indicated documents, characterized by the applicant, and including page counts, where applicable. It serves as evidence of receipt similar to a Post Card, as described in MPEP 503.**

**New Applications Under 35 U.S.C. 111**
**If a new application is being filed and the application includes the necessary components for a filing date (see 37 CFR 1.53(b)-(d) and MPEP 506), a Filing Receipt (37 CFR 1.54) will be issued in due course and the date shown on this Acknowledgement Receipt will establish the filing date of the application.**

**National Stage of an International Application under 35 U.S.C. 371**
**If a timely submission to enter the national stage of an international application is compliant with the conditions of 35 U.S.C. 371 and other applicable requirements a Form PCT/DO/EO/903 indicating acceptance of the application as a national stage submission under 35 U.S.C. 371 will be issued in addition to the Filing Receipt, in due course.**

**New International Application Filed with the USPTO as a Receiving Office**
**If a new international application is being filed and the international application includes the necessary components for an international filing date (see PCT Article 11 and MPEP 1810), a Notification of the International Application Number and of the International Filing Date (Form PCT/RO/105) will be issued in due course, subject to prescriptions concerning national security, and the date shown on this Acknowledgement Receipt will establish the international filing date of the application.**

PTO/SB/06 (09-11)
Approved for use through 1/31/2014. OMB 0651-0032
U.S. Patent and Trademark Office; U.S. DEPARTMENT OF COMMERCE
Under the Paperwork Reduction Act of 1995, no persons are required to respond to a collection of information unless it displays a valid OMB control number.

# PATENT APPLICATION FEE DETERMINATION RECORD

Substitute for Form PTO-875

| Application or Docket Number | Filing Date | |
|---|---|---|
| 15/095,137 | 04/10/2016 | ☐ To be Mailed |

**ENTITY**: ☐ LARGE ☒ SMALL ☐ MICRO

## APPLICATION AS FILED – PART I

| FOR | (Column 1) NUMBER FILED | (Column 2) NUMBER EXTRA | RATE ($) | FEE ($) |
|---|---|---|---|---|
| ☐ BASIC FEE (37 CFR 1.16(a), (b), or (c)) | N/A | N/A | N/A | |
| ☐ SEARCH FEE (37 CFR 1.16(k), (i), or (m)) | N/A | N/A | N/A | |
| ☐ EXAMINATION FEE (37 CFR 1.16(o), (p), or (q)) | N/A | N/A | N/A | |
| TOTAL CLAIMS (37 CFR 1.16(i)) | minus 20 = | * | X $ = | |
| INDEPENDENT CLAIMS (37 CFR 1.16(h)) | minus 3 = | * | X $ = | |
| ☐ APPLICATION SIZE FEE (37 CFR 1.16(s)) | If the specification and drawings exceed 100 sheets of paper, the application size fee due is $310 ($155 for small entity) for each additional 50 sheets or fraction thereof. See 35 U.S.C. 41(a)(1)(G) and 37 CFR 1.16(s). | | | |
| ☐ MULTIPLE DEPENDENT CLAIM PRESENT (37 CFR 1.16(j)) | | | | |
| * If the difference in column 1 is less than zero, enter "0" in column 2. | | | TOTAL | |

## APPLICATION AS AMENDED – PART II

AMENDMENT

| 04/05/2017 | (Column 1) CLAIMS REMAINING AFTER AMENDMENT | | (Column 2) HIGHEST NUMBER PREVIOUSLY PAID FOR | (Column 3) PRESENT EXTRA | RATE ($) | ADDITIONAL FEE ($) |
|---|---|---|---|---|---|---|
| Total (37 CFR 1.16(i)) | * 21 | Minus | ** 20 | = 1 | X $40 = | 40 |
| Independent (37 CFR 1.16(h)) | * 1 | Minus | ***3 | = 0 | X $210 = | 0 |
| ☐ Application Size Fee (37 CFR 1.16(s)) | | | | | | |
| ☐ FIRST PRESENTATION OF MULTIPLE DEPENDENT CLAIM (37 CFR 1.16(j)) | | | | | | |
| | | | | | TOTAL ADD'L FEE | **40** |

AMENDMENT

| | (Column 1) CLAIMS REMAINING AFTER AMENDMENT | | (Column 2) HIGHEST NUMBER PREVIOUSLY PAID FOR | (Column 3) PRESENT EXTRA | RATE ($) | ADDITIONAL FEE ($) |
|---|---|---|---|---|---|---|
| Total (37 CFR 1.16(i)) | * | Minus | ** | = | X $ = | |
| Independent (37 CFR 1.16(h)) | * | Minus | *** | = | X $ = | |
| ☐ Application Size Fee (37 CFR 1.16(s)) | | | | | | |
| ☐ FIRST PRESENTATION OF MULTIPLE DEPENDENT CLAIM (37 CFR 1.16(j)) | | | | | | |
| | | | | | TOTAL ADD'L FEE | |

* If the entry in column 1 is less than the entry in column 2, write "0" in column 3.
** If the "Highest Number Previously Paid For" IN THIS SPACE is less than 20, enter "20".
*** If the "Highest Number Previously Paid For" IN THIS SPACE is less than 3, enter "3".
The "Highest Number Previously Paid For" (Total or Independent) is the highest number found in the appropriate box in column 1.

LIE
ANTHONY WILLIAMS

This collection of information is required by 37 CFR 1.16. The information is required to obtain or retain a benefit by the public which is to file (and by the USPTO to process) an application. Confidentiality is governed by 35 U.S.C. 122 and 37 CFR 1.14. This collection is estimated to take 12 minutes to complete, including gathering, preparing, and submitting the completed application form to the USPTO. Time will vary depending upon the individual case. Any comments on the amount of time you require to complete this form and/or suggestions for reducing this burden, should be sent to the Chief Information Officer, U.S. Patent and Trademark Office, U.S. Department of Commerce, P.O. Box 1450, Alexandria, VA 22313-1450. DO NOT SEND FEES OR COMPLETED FORMS TO THIS ADDRESS. **SEND TO: Commissioner for Patents, P.O. Box 1450, Alexandria, VA 22313-1450.**
*If you need assistance in completing the form, call 1-800-PTO-9199 and select option 2.*

UNITED STATES PATENT AND TRADEMARK OFFICE

UNITED STATES DEPARTMENT OF COMMERCE
United States Patent and Trademark Office
Address: COMMISSIONER FOR PATENTS
P.O. Box 1450
Alexandria, Virginia 22313-1450
www.uspto.gov

| APPLICATION NUMBER | FILING OR 371(C) DATE | FIRST NAMED APPLICANT | ATTY. DOCKET NO./TITLE |
|---|---|---|---|
| 15/095,137 | 04/10/2016 | Alexander Soto | UBI-002D |

**CONFIRMATION NO. 5317**

**PUBLICATION NOTICE**

93749
Alexander Soto
7673 Hazard Center Dr.
San Diego, CA 92108

*OC000000088756754*

**Title:**SYSTEM AND METHOD FOR PERFORMING HIGH-SPEED COMMUNICATIONS OVER FIBER OPTICAL NETWORKS

**Publication No.**US-2017-0026145-A1
**Publication Date:**01/26/2017

## NOTICE OF PUBLICATION OF APPLICATION

The above-identified application will be electronically published as a patent application publication pursuant to 37 CFR 1.211, et seq. The patent application publication number and publication date are set forth above.

The publication may be accessed through the USPTO's publically available Searchable Databases via the Internet at www.uspto.gov. The direct link to access the publication is currently http://www.uspto.gov/patft/.

The publication process established by the Office does not provide for mailing a copy of the publication to applicant. A copy of the publication may be obtained from the Office upon payment of the appropriate fee set forth in 37 CFR 1.19(a)(1). Orders for copies of patent application publications are handled by the USPTO's Office of Public Records. The Office of Public Records can be reached by telephone at (571) 272-3150 or (800) 972-6382, by facsimile at (571) 273-3250, by mail addressed to the United States Patent and Trademark Office, Office of Public Records, Alexandria, VA 22313-1450 or via the Internet.

In addition, information on the status of the application, including the mailing date of Office actions and the dates of receipt of correspondence filed in the Office, may also be accessed via the Internet through the Patent Electronic Business Center at www.uspto.gov using the public side of the Patent Application Information and Retrieval (PAIR) system. The direct link to access this status information is currently http://pair.uspto.gov/. Prior to publication, such status information is confidential and may only be obtained by applicant using the private side of PAIR.

Further assistance in electronically accessing the publication, or about PAIR, is available by calling the Patent Electronic Business Center at 1-866-217-9197.

---

Office of Data Managment, Application Assistance Unit (571) 272-4000, or (571) 272-4200, or 1-888-786-0101

UNITED STATES PATENT AND TRADEMARK OFFICE

UNITED STATES DEPARTMENT OF COMMERCE
United States Patent and Trademark Office
Address: COMMISSIONER FOR PATENTS
P.O. Box 1450
Alexandria, Virginia 22313-1450
www.uspto.gov

| APPLICATION NUMBER | FILING OR 371(C) DATE | FIRST NAMED APPLICANT | ATTY. DOCKET NO./TITLE |
|---|---|---|---|
| 15/095,137 | 04/10/2016 | Alexander Soto | UBI-002D |

**CONFIRMATION NO. 5317**

**IMPROPER CFR REQUEST**

93749
Alexander Soto
7673 Hazard Center Dr.
San Diego, CA 92108

*OC000000088307814*

Date Mailed: 01/06/2017

# RESPONSE TO REQUEST FOR CORRECTED FILING RECEIPT

***Continuity, Priority Claims, Petitions, and Non-Publication Requests***

In response to your request for a corrected Filing Receipt, the Office is unable to comply with your request because:

- The priority or continuity claim has not been entered because it was not filed during the required time period. Applicant may wish to consider filing a petition to accept an unintentionally delayed claim for priority. See 37 CFR 1.55 or 1.78.

Questions about the contents of this notice and the requirements it sets forth should be directed to the Office of Data Management, Application Assistance Unit, at **(571) 272-4000** or **(571) 272-4200** or **1-888-786-0101**.

/sstephanos/

UNITED STATES PATENT AND TRADEMARK OFFICE

**UNITED STATES DEPARTMENT OF COMMERCE**
**United States Patent and Trademark Office**
Address: COMMISSIONER FOR PATENTS
P.O. Box 1450
Alexandria, Virginia 22313-1450
www.uspto.gov

| APPLICATION NO. | FILING DATE | FIRST NAMED INVENTOR | ATTORNEY DOCKET NO. | CONFIRMATION NO. |
|---|---|---|---|---|
| 15/095,137 | 04/10/2016 | Alexander Soto | UBI-002D | 5317 |

93749 7590 01/06/2017
Alexander Soto
7673 Hazard Center Dr.
San Diego, CA 92108

| EXAMINER |
|---|
| BELLO, AGUSTIN |

| ART UNIT | PAPER NUMBER |
|---|---|
| 2637 | |

| NOTIFICATION DATE | DELIVERY MODE |
|---|---|
| 01/06/2017 | ELECTRONIC |

**Please find below and/or attached an Office communication concerning this application or proceeding.**

The time period for reply, if any, is set in the attached communication.

Notice of the Office communication was sent electronically on above-indicated "Notification Date" to the following e-mail address(es):

alexander.i.soto@gmail.com

**Ex. 1024.172**

| Office Action Summary | Application No. 15/095,137 | Applicant(s) SOTO ET AL. | |
|---|---|---|---|
| | Examiner AGUSTIN BELLO | Art Unit 2637 | AIA (First Inventor to File) Status No |

***-- The MAILING DATE of this communication appears on the cover sheet with the correspondence address --***

**Period for Reply**

A SHORTENED STATUTORY PERIOD FOR REPLY IS SET TO EXPIRE 3 MONTHS FROM THE MAILING DATE OF THIS COMMUNICATION.

- Extensions of time may be available under the provisions of 37 CFR 1.136(a). In no event, however, may a reply be timely filed after SIX (6) MONTHS from the mailing date of this communication.
- If NO period for reply is specified above, the maximum statutory period will apply and will expire SIX (6) MONTHS from the mailing date of this communication.
- Failure to reply within the set or extended period for reply will, by statute, cause the application to become ABANDONED (35 U.S.C. § 133). Any reply received by the Office later than three months after the mailing date of this communication, even if timely filed, may reduce any earned patent term adjustment. See 37 CFR 1.704(b).

**Status**

1)☒ Responsive to communication(s) filed on *04/10/16*.

☐ A declaration(s)/affidavit(s) under **37 CFR 1.130(b)** was/were filed on _____.

2a)☒ This action is **FINAL**. 2b)☐ This action is non-final.

3)☐ An election was made by the applicant in response to a restriction requirement set forth during the interview on _____; the restriction requirement and election have been incorporated into this action.

4)☐ Since this application is in condition for allowance except for formal matters, prosecution as to the merits is closed in accordance with the practice under *Ex parte Quayle*, 1935 C.D. 11, 453 O.G. 213.

**Disposition of Claims***

5)☒ Claim(s) *1-5* is/are pending in the application.

5a) Of the above claim(s) _____ is/are withdrawn from consideration.

6)☐ Claim(s) _____ is/are allowed.

7)☒ Claim(s) *1-5* is/are rejected.

8)☐ Claim(s) _____ is/are objected to.

9)☐ Claim(s) _____ are subject to restriction and/or election requirement.

* If any claims have been determined allowable, you may be eligible to benefit from the **Patent Prosecution Highway** program at a participating intellectual property office for the corresponding application. For more information, please see http://www.uspto.gov/patents/init_events/pph/index.jsp or send an inquiry to PPHfeedback@uspto.gov.

**Application Papers**

10)☐ The specification is objected to by the Examiner.

11)☒ The drawing(s) filed on *04/10/16* is/are: a)☒ accepted or b)☐ objected to by the Examiner.

Applicant may not request that any objection to the drawing(s) be held in abeyance. See 37 CFR 1.85(a).

Replacement drawing sheet(s) including the correction is required if the drawing(s) is objected to. See 37 CFR 1.121(d).

**Priority under 35 U.S.C. § 119**

12)☐ Acknowledgment is made of a claim for foreign priority under 35 U.S.C. § 119(a)-(d) or (f).

**Certified copies:**

a)☐ All b)☐ Some** c)☐ None of the:

1.☐ Certified copies of the priority documents have been received.

2.☐ Certified copies of the priority documents have been received in Application No. _____.

3.☐ Copies of the certified copies of the priority documents have been received in this National Stage application from the International Bureau (PCT Rule 17.2(a)).

** See the attached detailed Office action for a list of the certified copies not received.

**Attachment(s)**

1) ☒ Notice of References Cited (PTO-892)

2) ☐ Information Disclosure Statement(s) (PTO/SB/08a and/or PTO/SB/08b) Paper No(s)/Mail Date _____.

3) ☐ Interview Summary (PTO-413) Paper No(s)/Mail Date. _____ .

4) ☐ Other: _____.

## DETAILED ACTION

### *Notice of Pre-AIA or AIA Status*

1. The present application is being examined under the pre-AIA first to invent provisions.

### *Claim Rejections - 35 USC § 102*

2. In the event the determination of the status of the application as subject to AIA 35 U.S.C. 102 and 103 (or as subject to pre-AIA 35 U.S.C. 102 and 103) is incorrect, any correction of the statutory basis for the rejection will not be considered a new ground of rejection if the prior art relied upon, and the rationale supporting the rejection, would be the same under either status.

3. The following is a quotation of the appropriate paragraphs of pre-AIA 35 U.S.C. 102 that form the basis for the rejections under this section made in this Office action:

> A person shall be entitled to a patent unless –
>
> (e) the invention was described in (1) an application for patent, published under section 122(b), by another filed in the United States before the invention by the applicant for patent or (2) a patent granted on an application for patent by another filed in the United States before the invention by the applicant for patent, except that an international application filed under the treaty defined in section 351(a) shall have the effects for purposes of this subsection of an application filed in the United States only if the international application designated the United States and was published under Article 21(2) of such treaty in the English language.

4. Claim(s) 1, 3-5 is/are rejected under pre-AIA 35 U.S.C. 102(e) as being anticipated by Brede (Patent No.: US 6,603,822 B2).

Regarding claim 1, Brede teaches a method for m-ary modulation communication across an optical network by an optical transceiver module comprising of: receiving a first electrical binary data signal through a system interface (e.g. "Network Interface" of Figure 3) of the optical transceiver module; converting the first electrical binary data signal in the optical transceiver module to a first electrical m-ary modulation signal (e.g. "takes the input bits and maps them into a complex constellation point" as in column 42 lines 49-67); amplifying (reference numeral 148 in Figure 21) the first electrical m-ary modulation signal to drive an optical transmitter (reference numeral 14 in Figure 3) of the optical transceiver module; emitting (reference numeral 14, 24 in Figure 3; reference numeral 501 in Figure 4) a first optical signal on a first wavelength responsive to and representative of the amplified first electrical m-ary modulation signal from the optical transmitter of the optical transceiver module; receiving (reference numeral 16, 26 in Figure 3) a second optical signal on a second wavelength and producing an electrical signal from an optical detector (reference numeral 16 in Figure 3; reference numeral 502 in Figure 4) of the optical transceiver module; amplifying (reference numeral 82 in Figure 3; reference numeral 154 in Figure 22; reference numeral 234 in Figure 37) the electrical signal to facilitate clock and data recovery in the optical transceiver module; equalizing (reference numeral 172 in Figure 22, reference numeral

214 in Figure 26; Figure 35 in its entirety) the amplified electrical signal and recovering clock data information (reference numeral 54 in Figure 3; reference numeral 168 in Figure 22; reference numeral 222 in Figure 26) to produce a second m-ary modulation signal in the optical transceiver module; demodulating (reference numeral 174, 176 in Figure 22; reference numeral 216 in Figure 26; reference numeral 366 in Figure 35) the second m-ary modulation signal according to a second electrical binary signal; and transmitting the second electrical binary signal through the system interface (e.g. "Network Interface" of Figure 3) of the optical transceiver module.

Regarding claim 3, Brede teaches the method of claim 1, whereby the m-ary modulation method is selected from the group consisting of: quadrature amplitude modulation (QAM); QAM-32 (column 6 line 5-18); QAM-256; quadrature phase shift keying (QPSK); differential QPSK; return-to-zero QPSK; dual-polarized QPSK; orthogonal frequency division multiplexing (OFDM) (column 3 line 11-21; column 11 line 1-8; column 19 line 34-67); pulse amplitude modulation (PAM); PAM-5; and PAM-17.

Regarding claim 4, Brede teaches the method of claim 1, further comprising of: storing a first set of coefficients which improve processing of the electrical signal (column 67 line 5-11; "coefficients" as in column 54 lines 8-24, 33-47 and beyond).

Regarding claim 5, Brede teaches the method of claim 1, further comprising of: loading a second set of stored coefficients which improve processing of the electrical signal (column 67 line 5-11; "coefficients" as in column 54 lines 8-24, 33-47 and beyond).

***Claim Rejections - 35 USC § 103***

5. In the event the determination of the status of the application as subject to AIA 35 U.S.C. 102 and 103 (or as subject to pre-AIA 35 U.S.C. 102 and 103) is incorrect, any correction of the statutory basis for the rejection will not be considered a new ground of rejection if the prior art relied upon, and the rationale supporting the rejection, would be the same under either status.

6. The following is a quotation of pre-AIA 35 U.S.C. 103(a) which forms the basis for all obviousness rejections set forth in this Office action:

> (a) A patent may not be obtained though the invention is not identically disclosed or described as set forth in section 102, if the differences between the subject matter sought to be patented and the prior art are such that the subject matter as a whole would have been obvious at the time the invention was made to a person having ordinary skill in the art to which said subject matter pertains. Patentability shall not be negatived by the manner in which the invention was made.

7. Claim 2 is/are rejected under pre-AIA 35 U.S.C. 103(a) as being unpatentable over Brede in view of Aronson (Pub. No.: US 2007/0031153 A1).

Regarding claim 2, Brede teaches the method of claim 1, but fails to specifically teach that the form factor of the optical transceiver module is

selected from the group consisting of: SFP; SFP+; XFP; X2; XENPAK; XPA; and 300 pin transceiver form factors. However, as evidenced by Aronson, these types of form factors are well known in the art (paragraph [0005], [0011], [0045]). One skilled in the art would have been motivated to utilize any of the claimed form factors in order to meet design requirements, budgetary requirements, or performance requirements such as achieving 10 Gb/s (paragraph [0005], [0011], [0045] of Aronson). Therefore, it would have been obvious to one skilled in the art at the time the invention was made to utilize a XFP form factor in Brede as taught by Aronson.

***Conclusion***

8. This is a continuation of applicant's earlier Application No. 12/512, 968. All claims are drawn to the same invention claimed in the earlier application and could have been finally rejected on the grounds and art of record in the next Office action if they had been entered in the earlier application. Accordingly, **THIS ACTION IS MADE FINAL** even though it is a first action in this case. See MPEP § 706.07(b). Applicant is reminded of the extension of time policy as set forth in 37 CFR 1.136(a).

A shortened statutory period for reply to this final action is set to expire THREE MONTHS from the mailing date of this action. In the event a first reply is filed within TWO MONTHS of the mailing date of this final action and the advisory action is not mailed until after the end of the THREE-

MONTH shortened statutory period, then the shortened statutory period will expire on the date the advisory action is mailed, and any extension fee pursuant to 37 CFR 1.136(a) will be calculated from the mailing date of the advisory action. In no, however, event will the statutory period for reply expire later than SIX MONTHS from the mailing date of this final action.

Any inquiry concerning this communication or earlier communications from the examiner should be directed to AGUSTIN BELLO whose telephone number is (571)272-3026. The examiner can normally be reached on M-F 8:30-6:00.

If attempts to reach the examiner by telephone are unsuccessful, the examiner's supervisor, David Payne can be reached on (571)272-3024. The fax phone number for the organization where this application or proceeding is assigned is 571-273-8300.

Information regarding the status of an application may be obtained from the Patent Application Information Retrieval (PAIR) system. Status information for published applications may be obtained from either Private PAIR or Public PAIR. Status information for unpublished applications is available through Private PAIR only. For more information about the PAIR system, see http://pair-direct.uspto.gov. Should you have questions on access to the Private PAIR system, contact the Electronic Business Center (EBC) at 866-217-9197 (toll-free). If you would like assistance from a USPTO Customer Service Representative or access to the automated information system, call 800-786-9199 (IN USA OR CANADA) or 571-272-1000.

/AGUSTIN BELLO/
Primary Examiner, Art Unit 2637

| Notice of References Cited | Application/Control No. 15/095,137 | Applicant(s)/Patent Under Reexamination SOTO ET AL. | |
|---|---|---|---|
| | Examiner AGUSTIN BELLO | Art Unit 2637 | Page 1 of 1 |

**U.S. PATENT DOCUMENTS**

| * | | Document Number Country Code-Number-Kind Code | Date MM-YYYY | Name | CPC Classification | US Classification |
|---|---|---|---|---|---|---|
| * | A | US-6,603,822 B2 | 08-2003 | Brede; Jeffrey | G06F17/14 | 348/E7.07 |
| * | B | US-2004/0028408 A1 | 02-2004 | Cox, Jeffrey Lloyd | H04B10/27 | 398/66 |
| * | C | US-2007/0031153 A1 | 02-2007 | Aronson; Lewis B. | H04B10/40 | 398/138 |
| * | D | US-7,242,868 B2 | 07-2007 | Soto; Alexander I. | H04J14/02 | 375/233 |
| * | E | US-7,317,769 B2 | 01-2008 | Tonietto; Davide | G11B20/10009 | 342/151 |
| * | F | US-7,321,612 B2 | 01-2008 | Tonietto; Davide | G11B20/10009 | 342/151 |
| * | G | US-7,486,894 B2 | 02-2009 | Aronson; Lewis B. | H04B10/40 | 398/128 |
| * | H | US-2010/0158530 A1 | 06-2010 | Soto; Alexander I. | H04B10/40 | 398/79 |
| * | I | US-7,729,617 B2 | 06-2010 | Sheth; Samir Satish | H04B10/801 | 370/465 |
| * | J | US-2011/0135312 A1 | 06-2011 | EL-AHMADI; Siraj Nour | H04L1/0057 | 398/135 |
| | K | US- | | | | |
| | L | US- | | | | |
| | M | US- | | | | |

**FOREIGN PATENT DOCUMENTS**

| * | | Document Number Country Code-Number-Kind Code | Date MM-YYYY | Country | Name | CPC Classification |
|---|---|---|---|---|---|---|
| | N | | | | | |
| | O | | | | | |
| | P | | | | | |
| | Q | | | | | |
| | R | | | | | |
| | S | | | | | |
| | T | | | | | |

**NON-PATENT DOCUMENTS**

| * | | Include as applicable: Author, Title Date, Publisher, Edition or Volume, Pertinent Pages) |
|---|---|---|
| | U | |
| | V | |
| | W | |
| | X | |

*A copy of this reference is not being furnished with this Office action. (See MPEP § 707.05(a).)
Dates in MM-YYYY format are publication dates. Classifications may be US or foreign.

| Search Notes | Application/Control No. | Applicant(s)/Patent Under Reexamination |
|---|---|---|
| | 15095137 | SOTO ET AL. |
| | **Examiner** | **Art Unit** |
| | AGUSTIN BELLO | 2637 |

## CPC- SEARCHED

| Symbol | Date | Examiner |
|---|---|---|
| | | |

## CPC COMBINATION SETS - SEARCHED

| Symbol | Date | Examiner |
|---|---|---|
| | | |

## US CLASSIFICATION SEARCHED

| Class | Subclass | Date | Examiner |
|---|---|---|---|
| 398 | 135-139 | 1/2/2017 | ab |

## SEARCH NOTES

| Search Notes | Date | Examiner |
|---|---|---|
| "398"$.ccls. and (sfp sfp+ xfp xenpak xpa) | 1/2/2017 | ab |

## INTERFERENCE SEARCH

| US Class/ CPC Symbol | US Subclass / CPC Group | Date | Examiner |
|---|---|---|---|
| | | | |

UNITED STATES PATENT AND TRADEMARK OFFICE

UNITED STATES DEPARTMENT OF COMMERCE
United States Patent and Trademark Office
Address: COMMISSIONER FOR PATENTS
P.O. Box 1450
Alexandria, Virginia 22313-1450
www.uspto.gov

# BIB DATA SHEET

**CONFIRMATION NO. 5317**

| SERIAL NUMBER | FILING or 371(c) DATE | CLASS | GROUP ART UNIT | ATTORNEY DOCKET NO. |
|---|---|---|---|---|
| 15/095,137 | 04/10/2016<br>**RULE** | 398 | 2637 | UBI-002D |

**APPLICANTS**

**INVENTORS**

Alexander Soto, San Diego, CA;
Walter Soto, San Clemente, CA;

**** CONTINUING DATA ***************************

This application is a CON of 12/512,968 07/30/2009 PAT 9337948
which is a CIP of 11/772,187 06/30/2007 ABN

**** FOREIGN APPLICATIONS ****************************

**** IF REQUIRED, FOREIGN FILING LICENSE GRANTED **** ** SMALL ENTITY **
04/25/2016

| | | | | | |
|---|---|---|---|---|---|
| Foreign Priority claimed ☐ Yes ☑ No<br>35 USC 119(a-d) conditions met ☐ Yes ☑ No<br>Verified and Acknowledged /AGUSTIN BELLO/ Examiner's Signature | ☐ Met after Allowance<br>Initials | STATE OR COUNTRY | SHEETS DRAWINGS | TOTAL CLAIMS | INDEPENDENT CLAIMS |
| | | CA | 9 | 5 | 1 |

**ADDRESS**

Alexander Soto
7673 Hazard Center Dr.
San Diego, CA 92108
UNITED STATES

**TITLE**

SYSTEM AND METHOD FOR PERFORMING HIGH-SPEED COMMUNICATIONS OVER FIBER OPTICAL NETWORKS

| | | |
|---|---|---|
| **FILING FEE RECEIVED**<br>800 | FEES: Authority has been given in Paper No._____ to charge/credit DEPOSIT ACCOUNT No._____ for following: | ☐ All Fees<br>☐ 1.16 Fees (Filing)<br>☐ 1.17 Fees (Processing Ext. of time)<br>☐ 1.18 Fees (Issue)<br>☐ Other _____<br>☐ Credit |

| Index of Claims | Application/Control No. | Applicant(s)/Patent Under Reexamination |
|---|---|---|
| | 15095137 | SOTO ET AL. |
| | **Examiner** | **Art Unit** |
| | AGUSTIN BELLO | 2637 |

| | | | | | | | |
|---|---|---|---|---|---|---|---|
| ✓ | Rejected | - | Cancelled | N | Non-Elected | A | Appeal |
| = | Allowed | ÷ | Restricted | I | Interference | O | Objected |

☐ Claims renumbered in the same order as presented by applicant ☐ CPA ☐ T.D. ☐ R.1.47

| CLAIM | | DATE | | | | | | | | |
|---|---|---|---|---|---|---|---|---|---|---|
| Final | Original | 01/02/2017 | | | | | | | | |
| | 1 | ✓ | | | | | | | | |
| | 2 | ✓ | | | | | | | | |
| | 3 | ✓ | | | | | | | | |
| | 4 | ✓ | | | | | | | | |
| | 5 | ✓ | | | | | | | | |



Ex. 1024.184

# CORRECTED ADS FORM

| | |
|---|---|
| Application Number | 15095137 |
| Title of Invention | SYSTEM AND METHOD FOR PERFORMING HIGH-SPEED COMMUNICATIONS OVER FIBER OPTICAL NETWORKS |

**Inventor Information**

****If no data is shown, no data has been corrected****

| | Data of Record | Updated Data |
|---|---|---|
| Order Number | | |
| Name | | |
| **Residence Information** | | |
| Residency | | |
| City | | |
| State | | |
| Country of Residence | | |
| **Mailing Address of Inventor** | | |
| Address 1 | | |
| Address 2 | | |
| City,State/Province, Postal Code | | |
| Country | | |

**Application Information**

| | Data of Record | Updated Data |
|---|---|---|
| Title of Invention | SYSTEM AND METHOD FOR PERFORMING HIGH-SPEED COMMUNICATIONS OVER FIBER OPTICAL NETWORKS | |
| Attorney Docket Number | UBI-002D | |
| Entity Type | Small | |

## Domestic Benefit/National Stage Information

****If no data is shown, no data has been corrected****

This section allows for the applicant to either claim benefit under 35 U.S.C. 119(e), 120, 121,365(c), or 386(c) or indicate National Stage entry from a PCT application. Providing this information in the application data sheet constitutes the specific reference required by 35 U.S. C. 119(e) or 120, and 37 CFR 1.78(a).

| | | Data of Record | Updated Data |
|---|---|---|---|
| | Prior Application Status | patented | |
| | Application Number | 15095137 | |
| | Continuity Type | CON | |
| | Prior Application Number | 12512968 | |
| | Filing Date (YYYY-MM-DD) | 2009-07-30 | |
| | Patent Number | 9337948 | |
| | Issue Date (YYYY-MM-DD) | 2016-05-10 | |

| | | Data of Record | Updated Data |
|---|---|---|---|
| | Prior Application Status | abandoned | |
| | Application Number | 12512968 | |
| | Continuity Type | CIP | |
| | Prior Application Number | 11772187 | |
| | Filing Date (YYYY-MM-DD) | 2007-06-30 | |
| | Patent Number | | |
| | Issue Date (YYYY-MM-DD) | 0001-01-01 | |

| | | Data of Record | Updated Data |
|---|---|---|---|
| | Prior Application Status | | patented |
| | Application Number | | 117722187 |
| | Continuity Type | | CIP |
| | Prior Application Number | | 10865547 |
| | Filing Date (YYYY-MM-DD) | | 2004-06-10 |
| | Patent Number | | 7242868 |
| | Issue Date (YYYY-MM-DD) | | 2007-07-10 |

| | | Data of Record | Updated Data |
|---|---|---|---|
| | Prior Application Status | | expired |
| | Application Number | | 10865547 |
| | Continuity Type | | PRO |
| | Prior Application Number | | 60480488 |
| | Filing Date (YYYY-MM-DD) | | 2003-06-21 |
| | Patent Number | | |
| | Issue Date (YYYY-MM-DD) | | |

| | | Data of Record | Updated Data |
|---|---|---|---|
| | Prior Application Status | | expired |
| | Application Number | | 10865547 |
| | Continuity Type | | PRO |
| | Prior Application Number | | 60477845 |
| | Filing Date (YYYY-MM-DD) | | 2003-06-10 |
| | Patent Number | | |
| | Issue Date (YYYY-MM-DD) | | |

## Foreign Priority Information

****If no data is shown, no data has been corrected****

This section allows for the applicant to claim priority to a foreign application. Providing this information in the application data sheet constitutes the claim for priority as required by 35 U.S.C. 119(b) and 37 CFR 1.55. When priority is claimed to a foreign application that is eligible for retrieval under the priority document exchange program (PDX) the information will be used by the Office to automatically attempt retrieval pursuant to 37 CFR 1.55(i)(1) and (2). Under the PDX program, applicant bears the ultimate responsibility for ensuring that a copy of the foreign application is received by the Office from the participating foreign intellectual property office, or a certified copy of the foreign priority application is filed, within the time period specified in 37 CFR 1.55(g)(1).

| | | Data of Record | Updated Data |
|---|---|---|---|
| | Application Number | | |
| | Country | | |
| | Filing Date | | |
| | Access Code | | |

## Applicant Information

****If no data is shown, no data has been corrected****
Providing assignment information in this section does not substitute for compliance with any requirement of part 3 of Title 37 of CFR to have an assignment recorded by the Office.

| | Data of Record | Updated Data |
|---|---|---|
| Applicant Type | | |

| | | |
|---|---|---|
| If applicant is the legal representative, indicate the authority to file the patent application, the inventor is | | |
| Name of the Deceased or Legally Incapacitated Inventor | | |
| Applicant is an Organization | | |
| Name | | |
| Organization Name | | |
| Address 1 | | |
| Address 2 | | |
| City,State/Province,Postal Code | | |
| Country | | |
| Phone Number | | |
| Fax Number | | |
| Email Address | | |

## Assignee Information including Non-Applicant Assignee Information

****If no data is shown, no data has been corrected****
Providing this information in the application data sheet does not substitute for compliance with any requirement of part 3 of Title 37 of the CFR to have an assignment recorded in the Office

| | Data of Record | Updated Data |
|---|---|---|
| Order | | |
| Applicant is an Organization | | |
| Name | | |

| | | |
|---|---|---|
| Organization Name | | |
| **Mailing Address** | | |
| Address 1 | | |
| Address 2 | | |
| City,State/Province,Postal Code | | |
| Country | | |
| Phone Number | | |
| Fax Number | | |
| Email Address | | |

## Signature

NOTE: This Application Data Sheet must be signed in accordance with 37 CFR 1.33(b).

This Application Data Sheet **must** be signed by a patent practitioner if one or more of the applicants is a **juristic entity** (e.g., corporation or association). If the applicant is two or more joint inventors, this form must be signed by a patent practitioner, **all** joint inventors who are the applicant, or one or more joint inventor-applicants who have been given power of attorney (e.g., see USPTO Form PTO/AIA/81) on behalf of **all** joint inventor-applicants.

See 37 CFR 1.4(d) for the manner of making signatures and certifications.

| | | | |
|---|---|---|---|
| Signature | /Alexander Soto/ | Registration Number | |
| First Name | Alexander | Last Name | Soto |

| | | | |
|---|---|---|---|
| Signature | /Walter Soto/ | Registration Number | |
| First Name | Walter | Last Name | Soto |

# Electronic Acknowledgement Receipt

| | |
|---|---|
| **EFS ID:** | 27968351 |
| **Application Number:** | 15095137 |
| **International Application Number:** | |
| **Confirmation Number:** | 5317 |
| **Title of Invention:** | SYSTEM AND METHOD FOR PERFORMING HIGH-SPEED COMMUNICATIONS OVER FIBER OPTICAL NETWORKS |
| **First Named Inventor/Applicant Name:** | |
| **Customer Number:** | 93749 |
| **Filer:** | Alexander Ivan Soto |
| **Filer Authorized By:** | |
| **Attorney Docket Number:** | UBI-002D |
| **Receipt Date:** | 04-JAN-2017 |
| **Filing Date:** | 10-APR-2016 |
| **Time Stamp:** | 15:25:10 |
| **Application Type:** | Utility under 35 USC 111(a) |

## Payment information:

| | |
|---|---|
| Submitted with Payment | no |

## File Listing:

| Document Number | Document Description | File Name | File Size(Bytes)/ Message Digest | Multi Part /.zip | Pages (if appl.) |
|---|---|---|---|---|---|
| 1 | Application Data Sheet to update/ correct info | CorrectedADS.pdf | 90703<br>8d878d21fcbf52d81791a91951601504 2e89dd60 | no | 7 |

**Warnings:**

| Information: | |
|---|---|
| **Total Files Size (in bytes):** | 90703 |

**This Acknowledgement Receipt evidences receipt on the noted date by the USPTO of the indicated documents, characterized by the applicant, and including page counts, where applicable. It serves as evidence of receipt similar to a Post Card, as described in MPEP 503.**

**New Applications Under 35 U.S.C. 111**
**If a new application is being filed and the application includes the necessary components for a filing date (see 37 CFR 1.53(b)-(d) and MPEP 506), a Filing Receipt (37 CFR 1.54) will be issued in due course and the date shown on this Acknowledgement Receipt will establish the filing date of the application.**

**National Stage of an International Application under 35 U.S.C. 371**
**If a timely submission to enter the national stage of an international application is compliant with the conditions of 35 U.S.C. 371 and other applicable requirements a Form PCT/DO/EO/903 indicating acceptance of the application as a national stage submission under 35 U.S.C. 371 will be issued in addition to the Filing Receipt, in due course.**

**New International Application Filed with the USPTO as a Receiving Office**
**If a new international application is being filed and the international application includes the necessary components for an international filing date (see PCT Article 11 and MPEP 1810), a Notification of the International Application Number and of the International Filing Date (Form PCT/RO/105) will be issued in due course, subject to prescriptions concerning national security, and the date shown on this Acknowledgement Receipt will establish the international filing date of the application.**

**CORRECTED ADS FORM**

| | |
|---|---|
| Application Number | 15095137 |
| Title of Invention | SYSTEM AND METHOD FOR PERFORMING HIGH-SPEED COMMUNICATIONS OVER FIBER OPTICAL NETWORKS |

**Inventor Information**

****If no data is shown, no data has been corrected****

| | Data of Record | Updated Data |
|---|---|---|
| Order Number | | |
| Name | | |
| **Residence Information** | | |
| Residency | | |
| City | | |
| State | | |
| Country of Residence | | |
| **Mailing Address of Inventor** | | |
| Address 1 | | |
| Address 2 | | |
| City,State/Province, Postal Code | | |
| Country | | |

**Application Information**

| | Data of Record | Updated Data |
|---|---|---|
| Title of Invention | SYSTEM AND METHOD FOR PERFORMING HIGH-SPEED COMMUNICATIONS OVER FIBER OPTICAL NETWORKS | |
| Attorney Docket Number | UBI-002D | |
| Entity Type | Small | |

## Domestic Benefit/National Stage Information

****If no data is shown, no data has been corrected****

This section allows for the applicant to either claim benefit under 35 U.S.C. 119(e), 120, 121,365(c), or 386(c) or indicate National Stage entry from a PCT application. Providing this information in the application data sheet constitutes the specific reference required by 35 U.S. C. 119(e) or 120, and 37 CFR 1.78(a).

| | | Data of Record | Updated Data |
|---|---|---|---|
| | Prior Application Status | patented | |
| | Application Number | 15095137 | |
| | Continuity Type | CON | |
| | Prior Application Number | 12512968 | |
| | Filing Date (YYYY-MM-DD) | 2009-07-30 | |
| | Patent Number | 9337948 | |
| | Issue Date (YYYY-MM-DD) | 2016-05-10 | |

| | | Data of Record | Updated Data |
|---|---|---|---|
| | Prior Application Status | abandoned | |
| | Application Number | 12512968 | |
| | Continuity Type | CIP | |
| | Prior Application Number | 11772187 | |
| | Filing Date (YYYY-MM-DD) | 2007-06-30 | |
| | Patent Number | | |
| | Issue Date (YYYY-MM-DD) | 0001-01-01 | |

| | | Data of Record | Updated Data |
|---|---|---|---|
| | Prior Application Status | | patented |
| | Application Number | | 117722187 |
| | Continuity Type | | CON |
| | Prior Application Number | | 10865547 |
| | Filing Date (YYYY-MM-DD) | | 2004-06-10 |
| | Patent Number | | 7242868 |
| | Issue Date (YYYY-MM-DD) | | 2007-07-10 |

| | | Data of Record | Updated Data |
|---|---|---|---|
| | Prior Application Status | | expired |
| | Application Number | | 10865547 |
| | Continuity Type | | PRO |
| | Prior Application Number | | 60480488 |
| | Filing Date (YYYY-MM-DD) | | 2003-06-21 |
| | Patent Number | | |
| | Issue Date (YYYY-MM-DD) | | |

| | | Data of Record | Updated Data |
|---|---|---|---|
| | Prior Application Status | | expired |
| | Application Number | | 10865547 |
| | Continuity Type | | PRO |
| | Prior Application Number | | 60477845 |
| | Filing Date (YYYY-MM-DD) | | 2003-06-10 |
| | Patent Number | | |
| | Issue Date (YYYY-MM-DD) | | |

## Foreign Priority Information

****If no data is shown, no data has been corrected****

This section allows for the applicant to claim priority to a foreign application. Providing this information in the application data sheet constitutes the claim for priority as required by 35 U.S.C. 119(b) and 37 CFR 1.55. When priority is claimed to a foreign application that is eligible for retrieval under the priority document exchange program (PDX) the information will be used by the Office to automatically attempt retrieval pursuant to 37 CFR 1.55(i)(1) and (2). Under the PDX program, applicant bears the ultimate responsibility for ensuring that a copy of the foreign application is received by the Office from the participating foreign intellectual property office, or a certified copy of the foreign priority application is filed, within the time period specified in 37 CFR 1.55(g)(1).

| | | Data of Record | Updated Data |
|---|---|---|---|
| | Application Number | | |
| | Country | | |
| | Filing Date | | |
| | Access Code | | |

## Applicant Information

****If no data is shown, no data has been corrected****
Providing assignment information in this section does not substitute for compliance with any requirement of part 3 of Title 37 of CFR to have an assignment recorded by the Office.

| | Data of Record | Updated Data |
|---|---|---|
| Applicant Type | | |

| | | |
|---|---|---|
| If applicant is the legal representative, indicate the authority to file the patent application, the inventor is | | |
| Name of the Deceased or Legally Incapacitated Inventor | | |
| Applicant is an Organization | | |
| Name | | |
| Organization Name | | |
| Address 1 | | |
| Address 2 | | |
| City,State/Province,Postal Code | | |
| Country | | |
| Phone Number | | |
| Fax Number | | |
| Email Address | | |

## Assignee Information including Non-Applicant Assignee Information

****If no data is shown, no data has been corrected****
Providing this information in the application data sheet does not substitute for compliance with any requirement of part 3 of Title 37 of the CFR to have an assignment recorded in the Office

| | Data of Record | Updated Data |
|---|---|---|
| Order | | |
| Applicant is an Organization | | |
| Name | | |

| | | |
|---|---|---|
| Organization Name | | |
| **Mailing Address** | | |
| Address 1 | | |
| Address 2 | | |
| City,State/Province,Postal Code | | |
| Country | | |
| Phone Number | | |
| Fax Number | | |
| Email Address | | |

## Signature

NOTE: This Application Data Sheet must be signed in accordance with 37 CFR 1.33(b).

This Application Data Sheet **must** be signed by a patent practitioner if one or more of the applicants is a **juristic entity** (e.g., corporation or association). If the applicant is two or more joint inventors, this form must be signed by a patent practitioner, **all** joint inventors who are the applicant, or one or more joint inventor-applicants who have been given power of attorney (e.g., see USPTO Form PTO/AIA/81) on behalf of **all** joint inventor-applicants.

See 37 CFR 1.4(d) for the manner of making signatures and certifications.

| | | | |
|---|---|---|---|
| Signature | /Alexander Soto/ | Registration Number | |
| First Name | Alexander | Last Name | Soto |

| | | | |
|---|---|---|---|
| Signature | /Walter Soto/ | Registration Number | |
| First Name | Walter | Last Name | Soto |

# Electronic Acknowledgement Receipt

| | |
|---|---|
| **EFS ID:** | 27968871 |
| **Application Number:** | 15095137 |
| **International Application Number:** | |
| **Confirmation Number:** | 5317 |
| **Title of Invention:** | SYSTEM AND METHOD FOR PERFORMING HIGH-SPEED COMMUNICATIONS OVER FIBER OPTICAL NETWORKS |
| **First Named Inventor/Applicant Name:** | |
| **Customer Number:** | 93749 |
| **Filer:** | Alexander Ivan Soto |
| **Filer Authorized By:** | |
| **Attorney Docket Number:** | UBI-002D |
| **Receipt Date:** | 04-JAN-2017 |
| **Filing Date:** | 10-APR-2016 |
| **Time Stamp:** | 15:45:07 |
| **Application Type:** | Utility under 35 USC 111(a) |

## Payment information:

| | |
|---|---|
| Submitted with Payment | no |

## File Listing:

| Document Number | Document Description | File Name | File Size(Bytes)/ Message Digest | Multi Part /.zip | Pages (if appl.) |
|---|---|---|---|---|---|
| 1 | Application Data Sheet to update/ correct info | CorrectedADS.pdf | 90704<br>8299de60bdea48cd542647732e98665f33f1a93f | no | 7 |

**Warnings:**

Ex. 1024.201

| Information: | |
|---|---|
| **Total Files Size (in bytes):** | 90704 |

**This Acknowledgement Receipt evidences receipt on the noted date by the USPTO of the indicated documents, characterized by the applicant, and including page counts, where applicable. It serves as evidence of receipt similar to a Post Card, as described in MPEP 503.**

**New Applications Under 35 U.S.C. 111**
**If a new application is being filed and the application includes the necessary components for a filing date (see 37 CFR 1.53(b)-(d) and MPEP 506), a Filing Receipt (37 CFR 1.54) will be issued in due course and the date shown on this Acknowledgement Receipt will establish the filing date of the application.**

**National Stage of an International Application under 35 U.S.C. 371**
**If a timely submission to enter the national stage of an international application is compliant with the conditions of 35 U.S.C. 371 and other applicable requirements a Form PCT/DO/EO/903 indicating acceptance of the application as a national stage submission under 35 U.S.C. 371 will be issued in addition to the Filing Receipt, in due course.**

**New International Application Filed with the USPTO as a Receiving Office**
**If a new international application is being filed and the international application includes the necessary components for an international filing date (see PCT Article 11 and MPEP 1810), a Notification of the International Application Number and of the International Filing Date (Form PCT/RO/105) will be issued in due course, subject to prescriptions concerning national security, and the date shown on this Acknowledgement Receipt will establish the international filing date of the application.**

# PATENT APPLICATION FEE DETERMINATION RECORD

Substitute for Form PTO-875

Application or Docket Number
15/095,137

## APPLICATION AS FILED - PART I

| FOR | (Column 1) NUMBER FILED | (Column 2) NUMBER EXTRA | SMALL ENTITY RATE($) | SMALL ENTITY FEE($) | OR | OTHER THAN SMALL ENTITY RATE($) | OTHER THAN SMALL ENTITY FEE($) |
|---|---|---|---|---|---|---|---|
| BASIC FEE (37 CFR 1.16(a), (b), or (c)) | N/A | N/A | N/A | 70 | | N/A | |
| SEARCH FEE (37 CFR 1.16(k), (i), or (m)) | N/A | N/A | N/A | 300 | | N/A | |
| EXAMINATION FEE (37 CFR 1.16(o), (p), or (q)) | N/A | N/A | N/A | 360 | | N/A | |
| TOTAL CLAIMS (37 CFR 1.16(i)) | 5 minus 20 = | * | x 40 = | 0.00 | OR | | |
| INDEPENDENT CLAIMS (37 CFR 1.16(h)) | 1 minus 3 = | * | x 210 = | 0.00 | | | |
| APPLICATION SIZE FEE (37 CFR 1.16(s)) | If the specification and drawings exceed 100 sheets of paper, the application size fee due is $310 ($155 for small entity) for each additional 50 sheets or fraction thereof. See 35 U.S.C. 41(a)(1)(G) and 37 CFR 1.16(s). | | | 0.00 | | | |
| MULTIPLE DEPENDENT CLAIM PRESENT (37 CFR 1.16(j)) | | | | 0.00 | | | |
| * If the difference in column 1 is less than zero, enter "0" in column 2. | | | TOTAL | 730 | | TOTAL | |

## APPLICATION AS AMENDED - PART II

| | | (Column 1) CLAIMS REMAINING AFTER AMENDMENT | | (Column 2) HIGHEST NUMBER PREVIOUSLY PAID FOR | (Column 3) PRESENT EXTRA | SMALL ENTITY RATE($) | SMALL ENTITY ADDITIONAL FEE($) | OR | OTHER THAN SMALL ENTITY RATE($) | OTHER THAN SMALL ENTITY ADDITIONAL FEE($) |
|---|---|---|---|---|---|---|---|---|---|---|
| AMENDMENT A | Total (37 CFR 1.16(i)) | * | Minus | ** | = | x = | | OR | x = | |
| AMENDMENT A | Independent (37 CFR 1.16(h)) | * | Minus | *** | = | x = | | OR | x = | |
| AMENDMENT A | Application Size Fee (37 CFR 1.16(s)) | | | | | | | | | |
| AMENDMENT A | FIRST PRESENTATION OF MULTIPLE DEPENDENT CLAIM (37 CFR 1.16(j)) | | | | | | | OR | | |
| | | | | | | TOTAL ADD'L FEE | | OR | TOTAL ADD'L FEE | |

| | | (Column 1) CLAIMS REMAINING AFTER AMENDMENT | | (Column 2) HIGHEST NUMBER PREVIOUSLY PAID FOR | (Column 3) PRESENT EXTRA | RATE($) | ADDITIONAL FEE($) | | RATE($) | ADDITIONAL FEE($) |
|---|---|---|---|---|---|---|---|---|---|---|
| AMENDMENT B | Total (37 CFR 1.16(i)) | * | Minus | ** | = | x = | | OR | x = | |
| AMENDMENT B | Independent (37 CFR 1.16(h)) | * | Minus | *** | = | x = | | OR | x = | |
| AMENDMENT B | Application Size Fee (37 CFR 1.16(s)) | | | | | | | | | |
| AMENDMENT B | FIRST PRESENTATION OF MULTIPLE DEPENDENT CLAIM (37 CFR 1.16(j)) | | | | | | | OR | | |
| | | | | | | TOTAL ADD'L FEE | | OR | TOTAL ADD'L FEE | |

* If the entry in column 1 is less than the entry in column 2, write "0" in column 3.
** If the "Highest Number Previously Paid For" IN THIS SPACE is less than 20, enter "20".
*** If the "Highest Number Previously Paid For" IN THIS SPACE is less than 3, enter "3".
The "Highest Number Previously Paid For" (Total or Independent) is the highest found in the appropriate box in column 1.

UNITED STATES PATENT AND TRADEMARK OFFICE

UNITED STATES DEPARTMENT OF COMMERCE
United States Patent and Trademark Office
Address: COMMISSIONER FOR PATENTS
P.O. Box 1450
Alexandria, Virginia 22313-1450
www.uspto.gov

| APPLICATION NUMBER | FILING or 371(c) DATE | GRP ART UNIT | FIL FEE REC'D | ATTY.DOCKET.NO | TOT CLAIMS | IND CLAIMS |
|---|---|---|---|---|---|---|
| 15/095,137 | 04/10/2016 | 2636 | 800 | UBI-002D | 5 | 1 |

**CONFIRMATION NO. 5317**

**UPDATED FILING RECEIPT**

93749
Alexander Soto
7673 Hazard Center Dr.
San Diego, CA 92108

Date Mailed: 10/19/2016

Receipt is acknowledged of this non-provisional patent application. The application will be taken up for examination in due course. Applicant will be notified as to the results of the examination. Any correspondence concerning the application must include the following identification information: the U.S. APPLICATION NUMBER, FILING DATE, NAME OF APPLICANT, and TITLE OF INVENTION. Fees transmitted by check or draft are subject to collection. Please verify the accuracy of the data presented on this receipt. **If an error is noted on this Filing Receipt, please submit a written request for a Filing Receipt Correction. Please provide a copy of this Filing Receipt with the changes noted thereon. If you received a "Notice to File Missing Parts" for this application, please submit any corrections to this Filing Receipt with your reply to the Notice. When the USPTO processes the reply to the Notice, the USPTO will generate another Filing Receipt incorporating the requested corrections**

**Inventor(s)**

Alexander Soto, San Diego, CA;
Walter Soto, San Clemente, CA;

**Applicant(s)**

Alexander Soto, San Diego, CA;
Walter Soto, San Clemente, CA;

**Power of Attorney:** None

**Domestic Priority data as claimed by applicant**

This application is a CON of 12/512,968 07/30/2009 PAT 9337948
which is a CIP of 11/772,187 06/30/2007 ABN

**Foreign Applications** for which priority is claimed (You may be eligible to benefit from the **Patent Prosecution Highway** program at the USPTO. Please see http://www.uspto.gov for more information.) - None.
*Foreign application information must be provided in an Application Data Sheet in order to constitute a claim to foreign priority. See 37 CFR 1.55 and 1.76.*

**Permission to Access Application via Priority Document Exchange:** Yes

**Permission to Access Search Results:** Yes

Applicant may provide or rescind an authorization for access using Form PTO/SB/39 or Form PTO/SB/69 as appropriate.

**If Required, Foreign Filing License Granted:** 04/25/2016

The country code and number of your priority application, to be used for filing abroad under the Paris Convention, is **US 15/095,137**

**Projected Publication Date:** 01/26/2017

**Non-Publication Request:** No

**Early Publication Request:** No
**** SMALL ENTITY ****
**Title**

SYSTEM AND METHOD FOR PERFORMING HIGH-SPEED COMMUNICATIONS OVER FIBER OPTICAL NETWORKS

**Preliminary Class**

398

**Statement under 37 CFR 1.55 or 1.78 for AIA (First Inventor to File) Transition Applications:** No

## PROTECTING YOUR INVENTION OUTSIDE THE UNITED STATES

Since the rights granted by a U.S. patent extend only throughout the territory of the United States and have no effect in a foreign country, an inventor who wishes patent protection in another country must apply for a patent in a specific country or in regional patent offices. Applicants may wish to consider the filing of an international application under the Patent Cooperation Treaty (PCT). An international (PCT) application generally has the same effect as a regular national patent application in each PCT-member country. The PCT process **simplifies** the filing of patent applications on the same invention in member countries, but **does not result** in a grant of "an international patent" and does not eliminate the need of applicants to file additional documents and fees in countries where patent protection is desired.

Almost every country has its own patent law, and a person desiring a patent in a particular country must make an application for patent in that country in accordance with its particular laws. Since the laws of many countries differ in various respects from the patent law of the United States, applicants are advised to seek guidance from specific foreign countries to ensure that patent rights are not lost prematurely.

Applicants also are advised that in the case of inventions made in the United States, the Director of the USPTO must issue a license before applicants can apply for a patent in a foreign country. The filing of a U.S. patent application serves as a request for a foreign filing license. The application's filing receipt contains further information and guidance as to the status of applicant's license for foreign filing.

Applicants may wish to consult the USPTO booklet, "General Information Concerning Patents" (specifically, the section entitled "Treaties and Foreign Patents") for more information on timeframes and deadlines for filing foreign patent applications. The guide is available either by contacting the USPTO Contact Center at 800-786-9199, or it can be viewed on the USPTO website at http://www.uspto.gov/web/offices/pac/doc/general/index.html.

For information on preventing theft of your intellectual property (patents, trademarks and copyrights), you may wish to consult the U.S. Government website, http://www.stopfakes.gov. Part of a Department of Commerce initiative, this website includes self-help "toolkits" giving innovators guidance on how to protect intellectual property in specific countries such as China, Korea and Mexico. For questions regarding patent enforcement issues, applicants may call the U.S. Government hotline at 1-866-999-HALT (1-866-999-4258).

## LICENSE FOR FOREIGN FILING UNDER

## Title 35, United States Code, Section 184

## Title 37, Code of Federal Regulations, 5.11 & 5.15

**GRANTED**

The applicant has been granted a license under 35 U.S.C. 184, if the phrase "IF REQUIRED, FOREIGN FILING LICENSE GRANTED" followed by a date appears on this form. Such licenses are issued in all applications where the conditions for issuance of a license have been met, regardless of whether or not a license may be required as set forth in 37 CFR 5.15. The scope and limitations of this license are set forth in 37 CFR 5.15(a) unless an earlier license has been issued under 37 CFR 5.15(b). The license is subject to revocation upon written notification. The date indicated is the effective date of the license, unless an earlier license of similar scope has been granted under 37 CFR 5.13 or 5.14.

This license is to be retained by the licensee and may be used at any time on or after the effective date thereof unless it is revoked. This license is automatically transferred to any related applications(s) filed under 37 CFR 1.53(d). This license is not retroactive.

The grant of a license does not in any way lessen the responsibility of a licensee for the security of the subject matter as imposed by any Government contract or the provisions of existing laws relating to espionage and the national security or the export of technical data. Licensees should apprise themselves of current regulations especially with respect to certain countries, of other agencies, particularly the Office of Defense Trade Controls, Department of State (with respect to Arms, Munitions and Implements of War (22 CFR 121-128)); the Bureau of Industry and Security, Department of Commerce (15 CFR parts 730-774); the Office of Foreign AssetsControl, Department of Treasury (31 CFR Parts 500+) and the Department of Energy.

**NOT GRANTED**

No license under 35 U.S.C. 184 has been granted at this time, if the phrase "IF REQUIRED, FOREIGN FILING LICENSE GRANTED" DOES NOT appear on this form. Applicant may still petition for a license under 37 CFR 5.12, if a license is desired before the expiration of 6 months from the filing date of the application. If 6 months has lapsed from the filing date of this application and the licensee has not received any indication of a secrecy order under 35 U.S.C. 181, the licensee may foreign file the application pursuant to 37 CFR 5.15(b).

---


### *SelectUSA*

The United States represents the largest, most dynamic marketplace in the world and is an unparalleled location for business investment, innovation, and commercialization of new technologies. The U.S. offers tremendous resources and advantages for those who invest and manufacture goods here. Through SelectUSA, our nation works to promote and facilitate business investment. SelectUSA provides information assistance to the international investor community; serves as an ombudsman for existing and potential investors; advocates on behalf of U.S. cities, states, and regions competing for global investment; and counsels U.S. economic development organizations on investment attraction best practices. To learn more about why the United States is the best country in the world to develop technology, manufacture products, deliver services, and grow your business, visit http://www.SelectUSA.gov or call +1-202-482-6800.

# Electronic Patent Application Fee Transmittal

| | |
|---|---|
| **Application Number:** | 15095137 |
| **Filing Date:** | 10-Apr-2016 |
| **Title of Invention:** | SYSTEM AND METHOD FOR PERFORMING HIGH-SPEED COMMUNICATIONS OVER FIBER OPTICAL NETWORKS |
| **First Named Inventor/Applicant Name:** | Alexander Soto |
| **Filer:** | Alexander Ivan Soto |
| **Attorney Docket Number:** | UBI-002D |

Filed as Small Entity

**Filing Fees for Utility under 35 USC 111(a)**

| Description | Fee Code | Quantity | Amount | Sub-Total in USD($) |
|---|---|---|---|---|
| **Basic Filing:** | | | | |
| Utility filing Fee (Electronic filing) | 4011 | 1 | 70 | 70 |
| Utility Search Fee | 2111 | 1 | 300 | 300 |
| Utility Examination Fee | 2311 | 1 | 360 | 360 |
| **Pages:** | | | | |
| **Claims:** | | | | |
| **Miscellaneous-Filing:** | | | | |
| Late Filing Fee for Oath or Declaration | 2051 | 1 | 70 | 70 |
| **Petition:** | | | | |

| Description | Fee Code | Quantity | Amount | Sub-Total in USD($) |
|---|---|---|---|---|
| **Patent-Appeals-and-Interference:** | | | | |
| **Post-Allowance-and-Post-Issuance:** | | | | |
| **Extension-of-Time:** | | | | |
| **Miscellaneous:** | | | | |
| | | **Total in USD ($)** | | **800** |

# Electronic Acknowledgement Receipt

| | |
|---|---|
| **EFS ID:** | 26175373 |
| **Application Number:** | 15095137 |
| **International Application Number:** | |
| **Confirmation Number:** | 5317 |
| **Title of Invention:** | SYSTEM AND METHOD FOR PERFORMING HIGH-SPEED COMMUNICATIONS OVER FIBER OPTICAL NETWORKS |
| **First Named Inventor/Applicant Name:** | Alexander Soto |
| **Customer Number:** | 93749 |
| **Filer:** | Alexander Ivan Soto |
| **Filer Authorized By:** | |
| **Attorney Docket Number:** | UBI-002D |
| **Receipt Date:** | 25-JUN-2016 |
| **Filing Date:** | 10-APR-2016 |
| **Time Stamp:** | 21:59:41 |
| **Application Type:** | Utility under 35 USC 111(a) |

## Payment information:

| | |
|---|---|
| Submitted with Payment | yes |
| Payment Type | Credit Card |
| Payment was successfully received in RAM | $800 |
| RAM confirmation Number | 6476 |
| Deposit Account | |
| Authorized User | |

The Director of the USPTO is hereby authorized to charge indicated fees and credit any overpayment as follows:

## File Listing:

| Document Number | Document Description | File Name | File Size(Bytes)/ Message Digest | Multi Part /.zip | Pages (if appl.) |
|---|---|---|---|---|---|
| 1 | Fee Worksheet (SB06) | fee-info.pdf | 37326<br>cb307e3ff2345f3ea2a530ea7bfcbcb6237f6838 | no | 2 |

**Warnings:**

**Information:**

| | |
|---|---|
| **Total Files Size (in bytes):** | 37326 |

**This Acknowledgement Receipt evidences receipt on the noted date by the USPTO of the indicated documents, characterized by the applicant, and including page counts, where applicable. It serves as evidence of receipt similar to a Post Card, as described in MPEP 503.**

**New Applications Under 35 U.S.C. 111**
**If a new application is being filed and the application includes the necessary components for a filing date (see 37 CFR 1.53(b)-(d) and MPEP 506), a Filing Receipt (37 CFR 1.54) will be issued in due course and the date shown on this Acknowledgement Receipt will establish the filing date of the application.**

**National Stage of an International Application under 35 U.S.C. 371**
**If a timely submission to enter the national stage of an international application is compliant with the conditions of 35 U.S.C. 371 and other applicable requirements a Form PCT/DO/EO/903 indicating acceptance of the application as a national stage submission under 35 U.S.C. 371 will be issued in addition to the Filing Receipt, in due course.**

**New International Application Filed with the USPTO as a Receiving Office**
**If a new international application is being filed and the international application includes the necessary components for an international filing date (see PCT Article 11 and MPEP 1810), a Notification of the International Application Number and of the International Filing Date (Form PCT/RO/105) will be issued in due course, subject to prescriptions concerning national security, and the date shown on this Acknowledgement Receipt will establish the international filing date of the application.**

UNITED STATES PATENT AND TRADEMARK OFFICE
COMMISSIONER FOR PATENTS
P.O.BOX 1450
ALEXANDRIA VA 22313-1451

PRESORTED
FIRST-CLASS MAIL
U.S. POSTAGE PAID
POSTEDIGITAL
NNNNN

Alexander Soto
7673 Hazard Center Dr.
San Diego, CA 92108

**Courtesy Reminder for**
**Application Serial No: 15/095,137**

Attorney Docket No: UBI-002D
Customer Number: 93749
Date of Electronic Notification: 04/27/2016

This is a courtesy reminder that new correspondence is available for this application. If you have not done so already, please review the correspondence. The official date of notification of the outgoing correspondence will be indicated on the form PTOL-90 accompanying the correspondence.

An email notification regarding the correspondence was sent to the following email address(es) associated with your customer number:
alexander.i.soto@gmail.com

To view your correspondence online or update your email addresses, please visit us anytime at **https://sportal.uspto.gov/secure/myportal/privatepair.** If you have any questions, please email the Electronic Business Center (EBC) at EBC@uspto.gov or call 1-866-217-9197.

**Ex. 1024.211**

UNITED STATES PATENT AND TRADEMARK OFFICE

UNITED STATES DEPARTMENT OF COMMERCE
United States Patent and Trademark Office
Address: COMMISSIONER FOR PATENTS
P.O. Box 1450
Alexandria, Virginia 22313-1450
www.uspto.gov

| APPLICATION NUMBER | FILING or 371(c) DATE | GRP ART UNIT | FIL FEE REC'D | ATTY.DOCKET.NO | TOT CLAIMS | IND CLAIMS |
|---|---|---|---|---|---|---|
| 15/095,137 | 04/10/2016 | 2636 | 0.00 | UBI-002D | 5 | 1 |

**CONFIRMATION NO. 5317**

**FILING RECEIPT**

93749
Alexander Soto
7673 Hazard Center Dr.
San Diego, CA 92108

Date Mailed: 04/27/2016

Receipt is acknowledged of this non-provisional patent application. The application will be taken up for examination in due course. Applicant will be notified as to the results of the examination. Any correspondence concerning the application must include the following identification information: the U.S. APPLICATION NUMBER, FILING DATE, NAME OF APPLICANT, and TITLE OF INVENTION. Fees transmitted by check or draft are subject to collection. Please verify the accuracy of the data presented on this receipt. **If an error is noted on this Filing Receipt, please submit a written request for a Filing Receipt Correction. Please provide a copy of this Filing Receipt with the changes noted thereon. If you received a "Notice to File Missing Parts" for this application, please submit any corrections to this Filing Receipt with your reply to the Notice. When the USPTO processes the reply to the Notice, the USPTO will generate another Filing Receipt incorporating the requested corrections**

**Inventor(s)**

Alexander Soto, San Diego, CA;
Walter Soto, San Clemente, CA;

**Applicant(s)**

Alexander Soto, San Diego, CA;
Walter Soto, San Clemente, CA;

**Power of Attorney:** None

**Domestic Priority data as claimed by applicant**

This application is a CON of 12/512,968 07/30/2009 PAT 9337948
which is a CIP of 11/772,187 06/30/2007 ABN

**Foreign Applications** for which priority is claimed (You may be eligible to benefit from the **Patent Prosecution Highway** program at the USPTO. Please see http://www.uspto.gov for more information.) - None.
*Foreign application information must be provided in an Application Data Sheet in order to constitute a claim to foreign priority. See 37 CFR 1.55 and 1.76.*

**Permission to Access Application via Priority Document Exchange:** Yes

**Permission to Access Search Results:** Yes

Applicant may provide or rescind an authorization for access using Form PTO/SB/39 or Form PTO/SB/69 as appropriate.

**If Required, Foreign Filing License Granted:** 04/25/2016

The country code and number of your priority application, to be used for filing abroad under the Paris Convention, is **US 15/095,137**

**Projected Publication Date:** To Be Determined - pending completion of Missing Parts

**Non-Publication Request:** No

**Early Publication Request:** No
**** SMALL ENTITY ****
**Title**

SYSTEM AND METHOD FOR PERFORMING HIGH-SPEED COMMUNICATIONS OVER FIBER OPTICAL NETWORKS

**Preliminary Class**

398

**Statement under 37 CFR 1.55 or 1.78 for AIA (First Inventor to File) Transition Applications:** No

## PROTECTING YOUR INVENTION OUTSIDE THE UNITED STATES

Since the rights granted by a U.S. patent extend only throughout the territory of the United States and have no effect in a foreign country, an inventor who wishes patent protection in another country must apply for a patent in a specific country or in regional patent offices. Applicants may wish to consider the filing of an international application under the Patent Cooperation Treaty (PCT). An international (PCT) application generally has the same effect as a regular national patent application in each PCT-member country. The PCT process **simplifies** the filing of patent applications on the same invention in member countries, but **does not result** in a grant of "an international patent" and does not eliminate the need of applicants to file additional documents and fees in countries where patent protection is desired.

Almost every country has its own patent law, and a person desiring a patent in a particular country must make an application for patent in that country in accordance with its particular laws. Since the laws of many countries differ in various respects from the patent law of the United States, applicants are advised to seek guidance from specific foreign countries to ensure that patent rights are not lost prematurely.

Applicants also are advised that in the case of inventions made in the United States, the Director of the USPTO must issue a license before applicants can apply for a patent in a foreign country. The filing of a U.S. patent application serves as a request for a foreign filing license. The application's filing receipt contains further information and guidance as to the status of applicant's license for foreign filing.

Applicants may wish to consult the USPTO booklet, "General Information Concerning Patents" (specifically, the section entitled "Treaties and Foreign Patents") for more information on timeframes and deadlines for filing foreign patent applications. The guide is available either by contacting the USPTO Contact Center at 800-786-9199, or it can be viewed on the USPTO website at http://www.uspto.gov/web/offices/pac/doc/general/index.html.

For information on preventing theft of your intellectual property (patents, trademarks and copyrights), you may wish to consult the U.S. Government website, http://www.stopfakes.gov. Part of a Department of Commerce initiative, this website includes self-help "toolkits" giving innovators guidance on how to protect intellectual property in specific countries such as China, Korea and Mexico. For questions regarding patent enforcement issues, applicants may call the U.S. Government hotline at 1-866-999-HALT (1-866-999-4258).



**Ex. 1024.213**

## LICENSE FOR FOREIGN FILING UNDER

## Title 35, United States Code, Section 184

## Title 37, Code of Federal Regulations, 5.11 & 5.15

**GRANTED**

The applicant has been granted a license under 35 U.S.C. 184, if the phrase "IF REQUIRED, FOREIGN FILING LICENSE GRANTED" followed by a date appears on this form. Such licenses are issued in all applications where the conditions for issuance of a license have been met, regardless of whether or not a license may be required as set forth in 37 CFR 5.15. The scope and limitations of this license are set forth in 37 CFR 5.15(a) unless an earlier license has been issued under 37 CFR 5.15(b). The license is subject to revocation upon written notification. The date indicated is the effective date of the license, unless an earlier license of similar scope has been granted under 37 CFR 5.13 or 5.14.

This license is to be retained by the licensee and may be used at any time on or after the effective date thereof unless it is revoked. This license is automatically transferred to any related applications(s) filed under 37 CFR 1.53(d). This license is not retroactive.

The grant of a license does not in any way lessen the responsibility of a licensee for the security of the subject matter as imposed by any Government contract or the provisions of existing laws relating to espionage and the national security or the export of technical data. Licensees should apprise themselves of current regulations especially with respect to certain countries, of other agencies, particularly the Office of Defense Trade Controls, Department of State (with respect to Arms, Munitions and Implements of War (22 CFR 121-128)); the Bureau of Industry and Security, Department of Commerce (15 CFR parts 730-774); the Office of Foreign AssetsControl, Department of Treasury (31 CFR Parts 500+) and the Department of Energy.

**NOT GRANTED**

No license under 35 U.S.C. 184 has been granted at this time, if the phrase "IF REQUIRED, FOREIGN FILING LICENSE GRANTED" DOES NOT appear on this form. Applicant may still petition for a license under 37 CFR 5.12, if a license is desired before the expiration of 6 months from the filing date of the application. If 6 months has lapsed from the filing date of this application and the licensee has not received any indication of a secrecy order under 35 U.S.C. 181, the licensee may foreign file the application pursuant to 37 CFR 5.15(b).

---


## *SelectUSA*

The United States represents the largest, most dynamic marketplace in the world and is an unparalleled location for business investment, innovation, and commercialization of new technologies. The U.S. offers tremendous resources and advantages for those who invest and manufacture goods here. Through SelectUSA, our nation works to promote and facilitate business investment. SelectUSA provides information assistance to the international investor community; serves as an ombudsman for existing and potential investors; advocates on behalf of U.S. cities, states, and regions competing for global investment; and counsels U.S. economic development organizations on investment attraction best practices. To learn more about why the United States is the best country in the world to develop technology, manufacture products, deliver services, and grow your business, visit http://www.SelectUSA.gov or call +1-202-482-6800.

UNITED STATES PATENT AND TRADEMARK OFFICE

UNITED STATES DEPARTMENT OF COMMERCE
United States Patent and Trademark Office
Address: COMMISSIONER FOR PATENTS
P.O. Box 1450
Alexandria, Virginia 22313-1450
www.uspto.gov

| APPLICATION NUMBER | FILING OR 371(C) DATE | FIRST NAMED APPLICANT | ATTY. DOCKET NO./TITLE |
|---|---|---|---|
| 15/095,137 | 04/10/2016 | Alexander Soto | UBI-002D |

**CONFIRMATION NO. 5317**

**FORMALITIES LETTER**

93749
Alexander Soto
7673 Hazard Center Dr.
San Diego, CA 92108

*OC000000082439645*

Date Mailed: 04/27/2016

# NOTICE TO FILE MISSING PARTS OF NONPROVISIONAL APPLICATION

**FILED UNDER 37 CFR 1.53(b)**

***Filing Date Granted***

**Items Required To Avoid Abandonment:**

An application number and filing date have been accorded to this application. The item(s) indicated below, however, are missing. Applicant is given **TWO MONTHS** from the date of this Notice within which to file all required items below to avoid abandonment. Extensions of time may be obtained by filing a petition accompanied by the extension fee under the provisions of 37 CFR 1.136(a).

- The statutory basic filing fee is missing.
- The application search fee must be submitted.
- The application examination fee must be submitted.
- Surcharge as set forth in 37 CFR 1.16(f) must be submitted.
  The surcharge is due for any one of:
  - late submission of the basic filing fee, search fee, or examination fee,
  - late submission of inventor's oath or declaration,
  - filing an application that does not contain at least one claim on filing, or
  - submission of an application filed by reference to a previously filed application.

**SUMMARY OF FEES DUE:**

The fee(s) required within **TWO MONTHS** from the date of this Notice to avoid abandonment is/are itemized below. Small entity discount is in effect. If applicant is qualified for micro entity status, an acceptable Certification of Micro Entity Status must be submitted to establish micro entity status. (See 37 CFR 1.29 and forms PTO/SB/15A and 15B.)

- $ **70** basic filing fee.
- $ **70** surcharge.
- $ **300** search fee.
- $ **360** examination fee.
- $( **0**) previous unapplied payment amount.
- $ **800** TOTAL FEE BALANCE DUE.

Replies must be received in the USPTO within the set time period or must include a proper Certificate of Mailing or Transmission under 37 CFR 1.8 with a mailing or transmission date within the set time period. For more information and a suggested format, see Form PTO/SB/92 and MPEP 512.

Replies should be mailed to:

Mail Stop Missing Parts
Commissioner for Patents
P.O. Box 1450
Alexandria VA 22313-1450

Registered users of EFS-Web may alternatively submit their reply to this notice via EFS-Web, including a copy of this Notice and selecting the document description "Applicant response to Pre-Exam Formalities Notice". https://sportal.uspto.gov/authenticate/AuthenticateUserLocalEPF.html

For more information about EFS-Web please call the USPTO Electronic Business Center at 1-866-217-9197 or visit our website at http://www.uspto.gov/ebc.

If you are not using EFS-Web to submit your reply, you must include a copy of this notice.

Questions about the contents of this notice and the requirements it sets forth should be directed to the Office of Data Management, Application Assistance Unit, at **(571) 272-4000** or **(571) 272-4200** or **1-888-786-0101**.

/dmnguyen/

# PATENT APPLICATION FEE DETERMINATION RECORD

Substitute for Form PTO-875

Application or Docket Number
15/095,137

## APPLICATION AS FILED - PART I

| FOR | (Column 1) NUMBER FILED | (Column 2) NUMBER EXTRA | SMALL ENTITY RATE($) | SMALL ENTITY FEE($) | OR | OTHER THAN SMALL ENTITY RATE($) | OTHER THAN SMALL ENTITY FEE($) |
|---|---|---|---|---|---|---|---|
| BASIC FEE (37 CFR 1.16(a), (b), or (c)) | N/A | N/A | N/A | 70 | | N/A | |
| SEARCH FEE (37 CFR 1.16(k), (i), or (m)) | N/A | N/A | N/A | 300 | | N/A | |
| EXAMINATION FEE (37 CFR 1.16(o), (p), or (q)) | N/A | N/A | N/A | 360 | | N/A | |
| TOTAL CLAIMS (37 CFR 1.16(i)) | 5 minus 20 = | * | x 40 = | 0.00 | OR | | |
| INDEPENDENT CLAIMS (37 CFR 1.16(h)) | 1 minus 3 = | * | x 210 = | 0.00 | | | |
| APPLICATION SIZE FEE (37 CFR 1.16(s)) | If the specification and drawings exceed 100 sheets of paper, the application size fee due is $310 ($155 for small entity) for each additional 50 sheets or fraction thereof. See 35 U.S.C. 41(a)(1)(G) and 37 CFR 1.16(s). | | | 0.00 | | | |
| MULTIPLE DEPENDENT CLAIM PRESENT (37 CFR 1.16(j)) | | | | 0.00 | | | |
| * If the difference in column 1 is less than zero, enter "0" in column 2. | | | TOTAL | 730 | | TOTAL | |

## APPLICATION AS AMENDED - PART II

| | | (Column 1) CLAIMS REMAINING AFTER AMENDMENT | | (Column 2) HIGHEST NUMBER PREVIOUSLY PAID FOR | (Column 3) PRESENT EXTRA | SMALL ENTITY RATE($) | SMALL ENTITY ADDITIONAL FEE($) | OR | OTHER THAN SMALL ENTITY RATE($) | OTHER THAN SMALL ENTITY ADDITIONAL FEE($) |
|---|---|---|---|---|---|---|---|---|---|---|
| AMENDMENT A | Total (37 CFR 1.16(i)) | * | Minus | ** | = | x = | | OR | x = | |
| AMENDMENT A | Independent (37 CFR 1.16(h)) | * | Minus | *** | = | x = | | OR | x = | |
| AMENDMENT A | Application Size Fee (37 CFR 1.16(s)) | | | | | | | | | |
| AMENDMENT A | FIRST PRESENTATION OF MULTIPLE DEPENDENT CLAIM (37 CFR 1.16(j)) | | | | | | | OR | | |
| | | | | | | TOTAL ADD'L FEE | | OR | TOTAL ADD'L FEE | |

| | | (Column 1) CLAIMS REMAINING AFTER AMENDMENT | | (Column 2) HIGHEST NUMBER PREVIOUSLY PAID FOR | (Column 3) PRESENT EXTRA | RATE($) | ADDITIONAL FEE($) | | RATE($) | ADDITIONAL FEE($) |
|---|---|---|---|---|---|---|---|---|---|---|
| AMENDMENT B | Total (37 CFR 1.16(i)) | * | Minus | ** | = | x = | | OR | x = | |
| AMENDMENT B | Independent (37 CFR 1.16(h)) | * | Minus | *** | = | x = | | OR | x = | |
| AMENDMENT B | Application Size Fee (37 CFR 1.16(s)) | | | | | | | | | |
| AMENDMENT B | FIRST PRESENTATION OF MULTIPLE DEPENDENT CLAIM (37 CFR 1.16(j)) | | | | | | | OR | | |
| | | | | | | TOTAL ADD'L FEE | | OR | TOTAL ADD'L FEE | |

* If the entry in column 1 is less than the entry in column 2, write "0" in column 3.
** If the "Highest Number Previously Paid For" IN THIS SPACE is less than 20, enter "20".
*** If the "Highest Number Previously Paid For" IN THIS SPACE is less than 3, enter "3".
The "Highest Number Previously Paid For" (Total or Independent) is the highest found in the appropriate box in column 1.

# SYSTEM AND METHOD FOR PERFORMING HIGH-SPEED COMMUNICATIONS OVER FIBER OPTICAL NETWORKS

## CROSS-REFERENCE TO RELATED APPLICATIONS

[001] This application is filed as a 37 C.F.R. 1.53(b) as a continuation claiming the benefit under 35 U.S.C §120 of the pending U.S. patent application No. 12/512,968, "System and Method for Performing High-Speed Communications over Fiber Optical Networks", which was filed by the same inventors on July 30, 2009 claiming the benefit under 37 C.F.R. 1.53(b)(2) of U.S. Patent Application Ser. No. 11/772,187 filed on June 30, 2007, which claims benefit of commonly-assigned U.S. Patent Application Ser. No. 10/865,547 filed on June 10, 2004, now U.S. Pat. No. 7,242,868, which claims the benefit of U.S. Provisional Application No. 60/477,845 filed June 10, 2003, incorporated herein by reference, and U.S. Provisional Application No. 60/480,488 filed June 21, 2003, incorporated herein by reference.

## FIELD OF THE INVENTION

[002] The invention relates to optical fiber communications generally, and more specifically to m-ary modulation in optical communication networks.

## BACKGROUND OF THE INVENTION

[003] Line coding is a process by which a communication protocol arranges symbols that represent binary data in a particular pattern for transmission. Conventional line coding used in fiber optic communications includes non-return-to-zero (NRZ), return-to-zero (RZ), and biphase, or Manchester. The binary bit stream derived from these line codes can be directly modulated onto wavelengths of light generated by the resonating frequency of a laser. Traditionally direct binary modulation based transmission offers an advantage with regard to the acceptable signal-to-noise ratio (SNR) at the optical receiver, which is one of the reasons direct binary modulation methods are used in the Datacom Ethernet/IP, Storage Fiber-Channel/FC and Telecom SONET/SDH markets for transmission across nonmultiplexed unidirectional fiber links.



Ex. 1024.218

[004] The performance of a fiber optic network can be measured by the maximum data throughput rate (or information carrying capacity) and the maximum distance between source and destination achievable (or reach). For Passive Optical Networks (PONs) in particular, additional measures of performance are the maximum number of Optical Networking Units (ONUs) and/or Optical Networking Terminals (ONTs) possible on a network and the minimum and maximum distance between the Optical Line Terminator (OLT) and an ONU/ONT. These performance metrics are constrained by, among other things, amplitude degradation and temporal distortions as a result of light traveling through an optical fiber.

[005] Amplitude degradation is substantially a function of length or distance between two end points of an optical fiber. Temporal distortion mechanisms include intramodal (chromatic) dispersion and intermodal (modal) dispersion. Intramodal dispersion is the dominant temporal dispersion on Single-mode fiber (SMF), while intermodal dispersion is dominant on Multi-mode fiber (MMF). Both types of temporal distortions are measured as functions of frequency or rate of transmission (also referred as line rate of a communication protocol) over distance in MHz•km. Temporal distortions are greater, hence a constraint on network performance, with increasing frequency transmission.

## SUMMARY OF THE INVENTION

[006] In general, in one aspect, the invention includes a method for processing a received optical signal in an optical communication network, the method including: determining a first set of coefficients to equalize a portion of an optical signal received over a first optical link including using a blind equalization method that does not use a known training sequence to equalize the portion of the optical signal, equalizing the portion of the optical signal using the determined coefficients, and demodulating the equalized portion of the optical signal according to an m-ary modulation format.

[007] Aspects of the invention may include one or more of the following features. The method includes determining a second set of coefficients to equalize a portion of an optical signal received over a second optical link. The method includes selecting one

of the first or second set of coefficients based on a source of the portion of optical signal being equalized. The portion of the optical signal includes a burst within a time slot of the first optical link. The method includes storing the determined coefficients. The method includes retrieving the stored coefficients for equalizing a second portion of the optical signal corresponding to a portion received from a same source as generated the first portion of the optical signal. The coefficients are retrieved between signal bursts on the first optical link. The stored coefficients are retrieved for respective portions of the optical signals that correspond to respective signal sources. The first optical link includes a link in a point-to-multipoint passive optical network. The m-ary modulation format is selected from the group consisting of quadrature amplitude modulation, quadrature phase shift keying, orthogonal frequency division multiplexing and pulse amplitude modulation. The method includes demodulating a received first data stream and demodulating a second data stream received in the optical signal, and multiplexing the first and second data streams.

[008] In general, in another aspect, the invention includes optical communication system including: a first transceiver coupled by an optical network to a second transceiver and third transceiver, the first transceiver including an equalization block and a modulation block, the equalization block operable to determine a first set of coefficients to equalize a portion of an optical signal received over the optical network from the second transceiver and a second set of coefficients to equalize a portion of the optical signal received over the optical network from the third transceiver, the equalization block including a blind equalization routine that does not use a known training sequence to equalize the portions of the optical signal, the equalization block operable to equalize the portions of the optical signal using the determined coefficients, and the modulation block operable to demodulate equalized portions of the optical signal according to an m-ary modulation format.

[009] Aspects of the invention may include one or more of the following features. The optical network includes a first optical link for coupling the first and second transceiver, and a second optical link for coupling the first and third transceivers and where the equalization block is operable to select one of the first or second set of

coefficients based on a source of the portion of optical signal being equalized. The equalization block is operable to store the first and second sets of coefficients for later retrieval and use to equalize portions of the optical signal. The portion of the optical signal includes a burst within a time slot on the optical network. The equalization block is operable to retrieve the sets of coefficients between signal bursts on the optical network. The optical network includes a link in a point-to-multipoint passive optical network. The m-ary modulation format is selected from the group consisting of quadrature amplitude modulation, quadrature phase shift keying, orthogonal frequency division multiplexing and pulse amplitude modulation. The system includes a multiplexer, the modulation block operable to demodulating a received first data stream and a second data stream received in the optical signal, and the multiplexer operable to multiplex the first and second data streams. The system includes a transmission convergence layer block for processing data streams received by the first transceiver, the transmission convergence layer block operable to control the demultiplexing of data streams including control of the multiplexer. The optical network is an optical distribution network. The first transceiver is an optical line terminator. The second and third transceivers are optical network terminals or optical network units.

[0010] In general, in another aspect, the invention includes a method for processing data for transmission in an optical communication network, the method including: demultiplexing a data stream into a first demultiplexed data stream and a second demultiplexed data stream, modulating each of the first and second data streams according to an m-ary modulation format, transmitting the first modulated data stream over a first optical link; and transmitting the second modulated data stream over a second optical link.

[0011] In general, in another aspect, the invention includes an optical communication system including: a demultiplexer operable to demultiplex a data stream into a first demultiplexed data stream and a second demultiplexed data stream, a modulation block operable to modulate each of the first and second data streams according to an m-ary modulation format, transmitting means operable to transmit the first modulated

data stream over a first optical link and the second modulated data stream over a second optical link.

[0012] In general, in another aspect, the invention includes a method for processing a received optical signal in an optical communication network, the method including: equalizing a received optical signal to provide an equalized signal, demodulating the equalized signal according to an m-ary modulation format to provide a demodulated signal, decoding the demodulated signal according to an inner code to provide an inner-decoded signal, and decoding the inner-decoded signal according to an outer code.

[0013] Aspects of the invention may include one or more of the following features. The m-ary modulation format is selected from the group consisting of quadrature amplitude modulation, quadrature phase shift keying, orthogonal frequency division multiplexing and pulse amplitude modulation. Equalizing the received optical signal includes equalizing the received optical signal using a blind equalization routine that does not use a known training sequence. Equalizing the received optical signal includes equalizing the received optical signal using a known training sequence. The known training sequence is multiplexed in a frame within the received optical signal. The inner code includes a trellis code. The outer code includes an error correction code. The outer code includes a: Reed-Solomon code; trellis code; Low-density parity-check code, or a Turbo code.

[0014] In general, in another aspect, the invention includes a transceiver including: an equalizer for equalizing a received optical signal to provide an equalized signal, a demodulator in communication with the equalizer for demodulating the equalized signal according to an m-ary modulation format to provide a demodulated signal, an inner-decoder in communication with the demodulator for decoding the demodulated signal according to an inner code to provide an inner-decoded signal, and an outer-decoder in communication with the inner-decoder for decoding the inner-decoded signal according to an outer code.

[0015] Aspects of the invention may include one or more of the following features. The transceiver includes an optical module including a first bi-directional optical fiber interface including a first detector and a first driver, and a second bi-directional

optical fiber interface including a second detector and a second driver, and management means for managing data flow across the first bi-directional optical fiber interface and across the second bi-directional optical fiber interface. The transceiver includes an optical module including a first bi-directional optical fiber interface including a first detector and a first driver, and a second bi-directional optical fiber interface including a second detector and a second driver, and a multiplexer for multiplexing a first demultiplexed data stream received over the first bi-directional optical fiber interface and a second demultiplexed data stream received over the second bi-directional optical fiber interface into a multiplexed data stream for transmission. The transceiver includes an optical module including a first bi-directional optical fiber interface including a first detector and a first driver, and a second bi-directional optical fiber interface including a second detector and a second driver, and a queue manager for managing traffic for a first bi-directional link associated with the first bi-directional optical fiber interface independently from traffic for a second bi-directional link associated with the second bi-directional optical fiber interface.

[0016] In general, in another aspect, the invention includes a transceiver including: an optical module including a first bi-directional optical fiber interface including a first detector and a first driver, and a second bi-directional optical fiber interface including a second detector and a second driver, and management means for managing data flow across the first bi-directional optical fiber interface and across the second bi-directional optical fiber interface.

[0017] Aspects of the invention may include one or more of the following features. The management means includes a multiplexer for multiplexing a first demultiplexed data stream received over the first bi-directional optical fiber interface and a second demultiplexed data stream received over the second bi-directional optical fiber interface into a multiplexed data stream for transmission. The management means is configured to demultiplex a data stream over a plurality of fiber links that excludes one or more failed fiber links. The management means includes a queue manager for managing traffic across the first bi-directional fiber interface independently from traffic for the second bi-directional fiber interface. The management means is

configured to change the alignment of received data bits to adjust for an order of optical fiber connections to the first bi-directional optical fiber interface and the second bi-directional optical fiber interface.

[0018] In general, in another aspect, the invention includes a method for equalizing an optical channel including: storing channel characteristics for the optical channel associated with a client, loading the stored channel characteristics during a waiting period between bursts on the channel, and equalizing a received burst from the client using the loaded channel characteristics.

[0019] Aspects of the invention may include one or more of the following features. The method includes determining that the waiting period occurs before a burst from the client based on a schedule. The method includes updating the stored channel characteristics. The method includes providing a grant window, transmitting an identification number to the client in response to receiving a serial number from the client after the grant window. The method includes determining a distance from an upstream device to the client. The method includes compensating for communication delays between the upstream device and the client based on the determined distance.

[0020] In general, in another aspect, the invention includes a method for communicating data on a fiber optic network, the method including: modulating and demodulating data traffic on an optical link in the network in an m-ary modulation format; encoding and decoding data traffic on an optical link in the network according to an inner coding routine and an outer coding routine, demultiplexing data traffic from an optical link in the network and transmitting the data traffic across a plurality of optical fiber links in the network, multiplexing the data traffic from the plurality of optical fiber links, and equalizing a receive channel in the network to remove temporal distortions.

[0021] Aspects of the invention may include one or more of the following features. The method includes equalizing the receive channel according to a blind equalization routine. The method includes equalizing the receive channel according to a decision directed equalization routine. The method includes saving and loading coefficients for equalizing the receive channel for each of a plurality of transmitting sources. The method includes conveying a training sequence for a decision directed equalization

routine as part of an in-use communication protocol. A training sequence for a decision directed equalization routine is conveyed as part of the activation process for an optical network terminal or optical network unit. An incorrect connection of an optical fiber link is corrected without having to physically change the connection.

[0022] In general, in another aspect, the invention includes a method for communicating on a passive optical network between a central transmission point and a plurality of receiving client end points, the method including: preparing downstream data for transmission and transmitting an optical downstream continuous mode signal demultiplexed across a plurality of bi-directional fibers using a plurality of wavelengths of light, receiving an optical downstream continuous mode signal demultiplexed from the plurality of bi-directional fibers using the plurality of wavelengths of light and recovering a downstream data transmission, preparing upstream data for transmission and transmitting an optical upstream burst mode signal demultiplexed across the plurality of bi-directional fibers using the plurality of wavelengthss of light, and receiving an optical burst mode signal demultiplexed from the plurality of bi-directional fibers using the plurality of wavelengths of light and recovering an upstream data transmission.

[0023] Aspects of the invention may include one or more of the following features. The central transmission point includes an optical line terminal, and the end points are operative as transceivers in a passive optical network. The upstream and downstream data for transmission are conveyed by respective different industry-standard services.

[0024] Implementations of the invention may include one or more of the following advantages.

[0025] A system is proposed that provides for high-speed communications over fiber optic networks. The system may include the use of the one or more of the following techniques either individually or in combination: m-ary modulation; channel equalization; demultiplexing across multiple fibers, coding and error correction. M-ary modulation allows for increased data throughput for a given line rate due to an increase in the number of bits per symbol transmitted. Channel equalization reduces the effects of temporal distortions allowing for increased reach. Demultiplexing across multiple fibers allows lower lines rates for a given data throughput rate due to

the increased aggregate data throughput from the multiplexing. Coding and error correction allows for a greater selection of qualifying optical components that can be used in the network and complements m-ary modulation and channel equalization for overall system performance improvement as measured by transmit energy per bit. These methods when combined (in part or in total) increase the data throughput and reach for fiber optic networks. For PONs in particular, these methods may increase the number of ONU/ONTs and the distance between OLT and ONU/ONT by decreasing the line rate as compared to a conventional communication system of equivalent data throughput.

## BRIEF DESCRIPTION OF THE DRAWINGS

[0026] FIG. 1 illustrates a fiber optic data network.

[0027] FIG. 2 illustrates a block diagram of a passive optical network.

[0028] FIG. 3 illustrates a block diagram of a high-speed communication system for fiber optic networks.

[0029] FIG. 4 illustrates a block diagram of an alternative high-speed communication system for fiber optic networks.

[0030] FIG. 5 illustrates a block diagram of an alternative high-speed communication system for fiber optic networks.

[0031] FIG. 6A illustrates a block diagram of an alternative high-speed communication system for fiber optic networks.

[0032] FIG. 6B illustrates a block diagram of an alternative high-speed communication system for fiber optic networks.

[0033] FIG. 7 illustrates a block diagram of an alternative high-speed communication system for fiber optic networks.

[0034] FIG. 8A illustrates an exemplary flow diagram for upstream burst mode communication processing.

[0035] FIG. 8B illustrates another exemplary flow diagram for upstream burst mode communication processing.

[0036] FIG. 9 illustrates an exemplary flow diagram for a downstream continuous mode communication equalization process.

## DETAILED DESCRIPTION

[0037] Referring to **FIG. 1**, wherein like reference numerals designate identical or corresponding parts throughout the several views and embodiments, a high-level fiber optic data network **50** includes a first transceiver **100** in communication with a second transceiver **101** via a fiber **108**. The first transceiver **100** and the second transceiver **101** include transmitter circuitry (Tx) **134, 135** to convert electrical data input signals into modulated light signals for transmission over the fiber **108**. In addition, the first transceiver **100** and the second transceiver **101** also include receiver circuitry (Rx) **133, 136** to convert optical signals received via the fiber **108** into electrical signals and to detect and recover encoded data and/or clock signals. First transceiver **100** and second transceiver **101** may contain a micro controller (not shown) and/or other communication logic and memory **131, 132** for network protocol operation. Although the illustrated and described implementations of the transceivers **100**, **101** include communication logic and memory in a same package or device as the transmitter circuitry **134**, **135** and receiver circuitry **133**, **136**, other transceiver configurations may also be used.

[0038] First transceiver **100** transmits/receives data to/from the second transceiver **101** in the form of modulated optical light signals of known wavelength via the optical fiber **108**. The transmission mode of the data sent over the optical fiber **108** may be continuous, burst or both burst and continuous modes. Both transceivers **100**,**101** may transmit a same wavelength (e.g., the light signals are polarized and the polarization of light transmitted from one of the transceivers is perpendicular to the polarization of the light transmitted by the other transceiver). Alternatively, a single wavelength can be used by both transceivers **100, 101** (e.g., the transmissions can be made in accordance with a time-division multiplexing scheme or similar protocol).

[0039] In another implementation, wavelength-division multiplexing (WDM) may also be used. WDM is herein defined as any technique by which two optical signals having different wavelengths may be simultaneously transmitted bi-directionally with one wavelength used in each direction over a single fiber. In yet another implementation, coarse wavelength-division multiplexing (CWDM) or dense

wavelength-division multiplexing (DWDM) may be used. CWDM and DWDM are herein defined as any technique by which two or more optical signals having different wavelengths are simultaneously transmitted in the same direction. The difference between CWDM and DWDM is CWDM wavelengths are typically spaced 20 nanometers (nm) apart, compared with 0.4 nm spacing for DWDM wavelengths. Both CWDM and DWDM may be used in bi-directional communications. In bi-directional communications, e.g. if wavelength-division multiplexing (WDM) is used, the first transceiver **100** may transmit data to the second transceiver **101** utilizing a first wavelength of modulated light conveyed via the fiber **108** and, similarly, the second transceiver **101** may transmit data via the same fiber **108** to the first transceiver **100** utilizing a second wavelength of modulated light conveyed via the same fiber **108**. Because only a single fiber is used, this type of transmission system is commonly referred to as a bi-directional transmission system. Although the fiber optic network illustrated in **FIG. 1** includes a first transceiver **100** in communication with a second transceiver **101** via a single fiber **108**, other implementations of fiber optic networks, such as those having a first transceiver in communication with a plurality of transceivers via a plurality of fibers (e.g. shown in **FIG. 2**), may also be used.

[0040] Electrical data input signals (Data IN 1) **115**, as well as any optional clock signal (Data Clock IN 1) **116**, are routed to the transceiver **100** from an external data source (not shown) for processing by the communication logic and memory **131**. Communication logic and memory **131** process the data and clock signals in accordance with an in-use network protocol. Communication logic and memory **131,132** provides management functions for received and transmitted data including queue management (e.g., independent link control) for each respective link, demultiplexing/multiplexing and other functions as described further below. The processed signals are transmitted by the transmitter circuitry **134**. The resulting modulated light signals produced from the first transceiver's **100** transmitter **134** are then conveyed to the second transceiver **101** via the fiber **108**. The second transceiver **101,** in turn, receives the modulated light signals via the receiver circuitry **136**, converts the light signals to electrical signals, processes the electrical signals

using the communication logic and memory **132** (in accordance with an in-use network protocol) and, optionally, outputs the electrical data output signals (Data Out 1) **119**, as well as optional clock signals (Data Clock Out 1) **120**.

[0041] Similarly, the second transceiver **101** receives electrical data input signals (Data IN 1) **123**, as well as any optional clock signals (Data Clock IN) **124**, from an external data source (not shown) for processing by the communication logic and memory **132** and transmission by the transmitter circuitry **135**. The resulting modulated light signals produced from the second transceiver's **101** transmitter **135** are then conveyed to the first transceiver **100** using the optical fiber **108**. The first transceiver **100,** in turn, receives the modulated light signals via the receiver circuitry **133**, converts the light signals to electrical signals, processes the electrical signals using the communication logic and memory **131** (in accordance with an in-use network protocol), and, optionally, outputs the electrical data output signals (Data Out 1) **127**, as well as any optional clock signals (Data Clock Out 1) **128**.

[0042] Fiber optic data network **50** may also include a plurality of electrical input and clock input signals, denoted herein as Data IN N **117/125** and Data Clock IN N **118/126**, respectively, and a plurality of electrical output and clock output signals, denoted herein as Data Out N **129/121** and Data Clock Out N **130/122**, respectively. The information provided by the plurality of electrical input signals may or may not be used by a given transceiver to transmit information via the fiber **108** and, likewise, the information received via the fiber **108** by a given transceiver may or may not be outputted by the plurality of electrical output signals. The plurality of electrical signals denoted above can be combined to form data plane or control plane bus(es) for input and output signals respectively. In some implementations, the plurality of electrical data input signals and electrical data output signals are used by logic devices or other devices located outside (not shown) a given transceiver to communicate with the transceiver's communication logic and memory **131, 132**, transmit circuitry **134, 135**, and/or receive circuitry **133,136**.

[0043] **FIG. 2** illustrates an implementation of a passive optical network (PON) **52**, where the functions described above associated with the first transceiver **100** and the second transceiver **101** of **FIG. 1**, are implemented in an optical line terminator

(OLT) **150** and one ore more optical networking units (ONU) **155,** and/or optical networking terminals (ONT) **160**, respectively. PON(s) **52** may be configured in either a point-to-point network architecture, wherein one OLT **150** is connected to one ONT **160** or ONU **155**, or a point-to-multipoint network architecture, wherein one OLT **150** is connected to a plurality of ONT(s) **160** and/or ONU(s) **155**. In the implementation shown in **FIG. 2,** an OLT **150** is in communication with multiple ONTs/ONUs **160**, **155** via a plurality of optical fibers **152**. The fiber **152** coupling the OLT **150** to the PON **52** is also coupled to other fibers **152** connecting the ONTs/ONUs **160**, **155** by one or more passive optical splitters **157**. All of the optical elements between an OLT and ONTs/ONUs are often referred to as the Optical Distribution Network (ODN). Other alternate network configurations, including alternate implementations of point-to-multipoint networks are also possible.

[0044] **FIG. 3** shows a system block diagram for an implementation of transceiver **100**. It will be appreciated that, while not always shown, one or more elements or blocks in the following embodiments may be sealed in one or more faraday cages or combined with blocks in faraday cages already shown. It will also be appreciated that, while not shown, one or more elements or blocks in the following embodiments may be combined onto one or more integrated circuits (IC) or surface mount photonic (SMP) devices. The following is a description of the functions and responsibilities that are part of an implementation of the Communication Logic & Memory **131** of transceiver **100.** The Communication Logic & Memory **131** includes an asynchronous or synchronous system transmit (TX) interface **301** and receive (RX) interface **302** that is supported by the TX Path **303** and RX Path **304** blocks. System interfaces **301**,**302** and management or control interfaces can be selected from conventional interfaces including serial, serial XFI, parallel, GMII, XGMII, SGMII, RGMII or XAUI or some other interface may be used. TX Path **303** and RX Path **304** blocks manage the TX and RX interfaces **301,302** and feed data into and get data from the transmission convergence layer or media access control (TC-Layer/MAC) block **305**. TX Path **303** and RX Path **304** blocks may perform line code adaptation functions (e.g., line coding used outside the transceiver can be terminated by a TX Path block **303** or sourced by a RX Path block **304** to allow a bit stream, cell, frame, and/or packet formatted data

to be adapted for processing by a TC-Layer/MAC block **305**). The TC-Layer/MAC **305** block creates the transport system that the data traffic, management and control agents will exploit. TC-Layer/MAC **305** block includes a TC-layer protocol stack such as specified in the ITU G.984 specification (incorporated herein by reference), IEEE 802.3ah MAC protocol stack specification (incorporated herein by reference) or a derivative thereof. A variety of other protocol stacks may also be used. The TC-Layer/MAC **305** block may perform the additional functions of equalizer, coding, queue and demultiplexing management. The TC-Layer/MAC **305** block sends transmit data to a DeMux **306** block, which splits the transmitting data into a plurality of data paths (two paths shown in **FIG. 3**) for demultiplexing data across multiple fibers. Some implementations need not include DeMux **306** block (and hence do not support demultiplexing data across multiple fibers). DeMux **306** block may demultiplex data across a subset of fibers to exclude fibers experiencing link failure to ensure data communications continue. The exclusion of fiber links experiencing failure is controlled by the TC-Layer/MAC **305** block as part of the demultiplexing management function.

[0045] After DeMux **306** block, in one implementation, the transmit paths have analogous processing blocks. In an alternative implementation, independent signal processing can be supported in each path. **FIG. 3** shows two transmit paths, though more can be included. In a transmit path, the transmit data is provided to the outer coder **307a, 307b** block. In one implementation, outer coder **307a** performs a reed-solomon coding. The outer coder **307a, 307b** block provides data to the inner coder **308a, 308b** block. In order to improve the energy per bit required to deliver the transmitting data, an inner coder **308a, 308b** is used. Outer coder **307a, 307b** may be used to support forward error correction (FEC) recovery of bit(s) errors. In one implementation, inner coder **308a, 308b** implements a trellis coding method. Data from the inner coder **308a, 308b** is provided to Modulation (MOD) **309a, 309b** block. Alternatively, in some implementations, the outer coder **307a, 307b** and inner coder **308a, 308b** blocks are not used, and the output of the DeMux **306** block is provided directly to the MOD **309a, 309b** block. Other outer coding methods that work on bit or symbol streams of arbitrary length can be used, for example linear block codes

such as Low-density parity-check (LDPC) and convolutional codes such as Turbo code may be used. Other inner coding methods that are complementary to the outer code as well as inner coding methods that are designed to shape or control the relative intensity noise (RIN) of the optical transmitter to improve overall system performance may be used. For example, an inner coder that dynamically adapts to measured RIN or compensates for measured temperature or other artifacts of laser design may be used.

[0046] To increase the number of bits per symbol transmitted, m-ary modulation is performed in the MOD **309a, 309b** block. In one implementation, an m-ary modulation method such as Quadrature Amplitude Modulation (QAM), QAM-32, QAM-256, Pulse Amplitude Modulation (PAM), PAM-5, PAM-17, Quadrature Phase Shift Keying (QPSK), differential QPSK (DQPSK), return-to-zero QPSK (RZ-QPSK), dual-polarized QPSK (DP-QPSK), or Orthogonal Frequency Division Multiplexing (OFDM) is used. Other m-ary modulation communication methods can be used, in particular other coherent modulation techniques which are known in the art. After processing by the MOD **309a, 309b** block, the transmit data is converted to an analog signal by a Digital to Analog Converter (DAC) **310a, 310b**. In one implementation, DAC **310a, 310b** is configured to shape, condition or emphasize the signal for improved transmission performance. The DAC **310a, 310b** passes the transmit data via electrical signals **311a, 311b** to the laser driver (Driver) **312a, 312b** as part of an implementation of TX **134** in an Optical Module **326**. The driver **312a, 312b** drives an optical transmitter, such as the Laser Diode (LD) **313a, 313b**, which transmits light in response to transmit data signals received from the driver **312a, 312b**. The light emitted from LD **313a, 313b** is directed into the fibers **314a, 314b** with the aid of a fiber optic interface (not shown). The fiber optic interface may include the necessary components (e.g., filters) to implement WDM, CWDM or DWDM functions.

[0047] On the receive side of the transceiver **100** as part of an implementation of RX **133** in an Optical Module **326**, light propagated across an ODN (not shown in **FIG. 3**) travels over fibers **314a, 314b** through a fiber optic interface (not shown) and is received by an optical detector, such as the photo diode (PD) **315a, 315b**. In

response, the PD **315a, 315b** provides a photocurrent to the TransImpedance Amplifier (TIA) **316a, 316b** that converts the photocurrent into an electrical voltage signal. The electrical voltage signal from the TIA **316a, 316b** is then transmitted to a Linear Amplifier (LA) **317a, 317b** as a differential signal or a single-ended signal **318a, 318b**. The LA **317a, 317b** performs signal conditioning on the received electrical voltage signal to provide increased resolution and system performance. The LA **317a, 317b** provides an electrical signal **319a, 319b** to a Clock Data Recovery (CDR) and Equalization (EQ) **320a, 320b** block that recovers clock and data signals and performs equalization on the received data, which is then provided to a De-Mod & Inner Decoder **323a, 323b**. The CDR & EQ 3**20a, 320b** block may implement a blind equalization method or decision-directed equalization method. Blind equalization is discussed further below. Other equalization methods may be used, particularly those that aid the CDR. The De-Mod & Inner Decoder **323a, 323b** block performs complementary de-modulation to the m-ary modulation performed in the MOD **309a, 309b** block as well as a complementary decoding method to the coding method performed in the Inner Coder **308a, 308b** block. In one implementation, De-Mod & Inner Decoder **323a, 323b** includes a Viterbi decoder. Other decoding means may be used. Received data is then provided to the outer decoder **324a, 324b** block, which performs a complementary decode to the error detection and/or recovery method chosen in the outer coder **307a, 307b** block. After demodulation and decoding, the received data is then provided to the Mux **325** block that performs a complementary function to the DeMux **306** block. The combined received data is then provided to the TC-Layer/MAC **305**. In implementations without Outer Coder **307a, 307b** and Inner Coder **308a, 308b** blocks, the output of the CDR & EQ **320a, 320b** block is provided directly to the Mux **325** block.

[0048] The RX **133,136** and TX **134,135** circuitry of transceivers **100,101**, or portions thereof, for example, PD **315a, 315b** and LA **317a, 317b**, can be combined within industry standard optical modules. Common optical module standards are 300pin, XENPAK, X2, and XPAK transponders and XFP or SFP and SFP+ transceivers. These optical modules include unidirectional fiber links with one fiber link for transmit path and a second fiber link for the receive path. However, implementations

of optical modules **326, 401, 501** incorporate a plurality of bi-directional fiber links for transmitting demultiplexed data on separate fiber links. Any of a variety of optical couplers may be used to separate and/or combine light propagating into or out of the fiber links. These optical modules **326, 401, 501** used herein can conform to a form factor of standard optical modules such as the 300pin, XENPAK, X2, XPAK, XFP or SFP and SFP+. Other form factors may also be used.

[0049] Alternatively, in other implementations of transceiver **100**, functions described above may be integrated into various different components. For example, in the implementation of transceiver **100** shown in **FIG. 4**, various functions may be incorporated into optical module **401** such as: digital to analog conversion **310a, 310b**; analog to digital conversion **321a, 321b**; clock data recovery and equalization **320a, 320b**; m-ary modulation **309a, 309b**; m-ary de-modulation **323a, 323b**; inner coder **308a, 308b**; inner de-coder **323a, 323b**; outer coder **307a, 307b**; outer de-coder **324a, 324b**, and the De-Mux **306** and Mux **325** functions that enable demultiplexing across multiple fibers. The optical module **401** may have an interface that can connect to existing TC-Layer or MAC implementations currently produced. In another alternative implementation the digital to analog conversion **310a, 310b**; analog to digital conversion **321a, 321b,** and the clock data recovery **320a, 320b** functions are incorporated into an optical module (not shown). In yet another alternative implementation of the transceiver **100** as shown in **FIG. 5**, an optical module **501** includes the De-Mux **306** and Mux **325** functions enabling demultiplexing across multiple fibers. The optical module **501** may have an interface that can connect to existing TC-Layer or MAC implementations currently produced.

[0050] Alternative implementations of transceiver **100** utilizing a single fiber link **314a** (without demultiplexing across multiple fibers) are illustrated in **FIG. 6A-6B**. Alternatively, an implementation of the transceiver **100** may utilize multiple fiber links **314a, 314b** while not performing demultiplexing across multiple fibers, as illustrated in **FIG. 7**. In this implementation, the TC-Layer/MAC **701** block manages the fiber links as independent fiber links that all connect to the same end point(s) on the network. In one implementation, TC-Layer/MAC **701** block is a derivative of the Transmission Convergence Layer specified in ITU G.984 or MAC specified in IEEE

802.3ah, with the added functionality of queue management of the traffic across the plurality of independent fiber links. The TC-Layer/MAC **701** block may exclude use of one or more fiber links if the fiber link experiences a failure. This exclusion of failed fiber links enables the TC-Layer/MAC **701** block (i.e., queue management function) to continue providing service across a PON using the remaining active links. Each fiber can be deployed across physically different paths to provide optical fiber distribution path diversity and improved protection against failures. Failures may originate in the optical module or across elements of the ODN such as fiber or connector breaks.

**Channel Equalization**

[0051] An implementation for a channel equalization routine executed in the CDR & EQ **320a, 320b** block includes determining coefficient settings or weights that are applied to the received data to remove undesired information (e.g. intersymbol interference (ISI) ) or noise from the received data and thereby increase the sensitivity, dynamic range of detecting signals and accuracy of receiving signals. Channel equalization can include a training or convergence period in which characteristics of the channel are learned or accounted for and coefficients, filter variables, or weights are adapted before or while processing the received data. Decision-directed equalization is an equalization method in which a known training sequence is sent during the training period and the receiver/transceiver uses the knowledge of the training sequence to learn about the channel characteristics. The training sequence can be multiplexed within a PON's TC-Layer framing protocol. Blind equalization is a process during which an unknown input data sequence is recovered from the output signal of an unknown channel (i.e., current equalization data for a given channel is unknown or otherwise unavailable). Other equalization methods may be used, digital signal processing methods, or methods that improve the accuracy of processing received data signals or improve the efficiency of processing received data signals (e.g., reducing data acquisition time, reducing power consumed) by saving or storing a first set of settings generated by processing data from a first ONU/ONT and then load previously saved second set of settings previously generated by processing data from

a second ONU/ONT before processing another set of data from the second ONU/ONT.

[0052] One mode of communications used by a PON, e.g., for upstream data traffic (ONU/ONT to OLT direction), is "burst mode" communications. For example, upstream communications on a PON may include a link shared among multiple clients or ONUs/ONTs via time division multiplexing under control by an OLT. The upstream direction is divided into time slots; each time slot includes a defined number of bits. A given ONU/ONT is granted some number of time slots during which to transmit an upstream frame of data to an OLT. The upstream direction uses an orchestrated collection of bursts from the different ONU/ONTs, coordinated by the OLT that tries to maximize upstream traffic bandwidth efficiency by minimizing empty slots.

[0053] A flow chart for an exemplary upstream burst mode communication equalization process is shown in **FIG. 8A**. To read or interpret the upstream data traffic from a client ONU/ONT, an OLT trains and/or equalizes the channel for that client ONU/ONT. Since the ONU/ONTs may be at different distances from the OLT and all do not share the same fiber, different channel characteristics result. Communication efficiencies may be obtained by determining **800** a set of equalization coefficients for a channel during a burst from a client, saving **801** the determined equalization coefficients, entering a wait period **802** (also known as a PON's silence period when no client ONU/ONTs are transmitting upstream), and loading **803** the stored equalization coefficients before a next burst from the client (during the wait period), to avoid re-training or re-equalizing on every burst communication. The OLT has prior knowledge of which ONU/ONT will be transmitting data during which time slots and can use this knowledge during the time between burst communications (during the wait period) to load **803** an appropriate set of coefficients pertaining to the particular ONU/ONT transmitting prior to receiving **804** its next upstream burst. This process continues for subsequent bursts. In one implementation, periodic (though not coincident with each communication burst) updates to the channel characteristics may be made (and stored). The OLT can save **801** coefficients that have converged or have been trained after receiving burst

communications from the first ONU/ONT and load **803** a new set of coefficients during the wait period between bursts (i.e., before an incoming upstream burst from a second ONU/ONT). In another exemplary implementation, the OLT can save or store **801** coefficients or settings during the wait period **802** between burst as shown in **FIG. 8B**. In one implementation, in addition to or alternative to storage of coefficient data, the OLT may also save and load inner and/or outer coding states between bursts improving the efficiency of communication, similar to the equalization process of **FIG. 8A-8B**. Other methods that improve the accuracy and efficiency of processing burst mode data from specific ONUs/ONTs may be used following a similar process.

[0054] Another mode of communications used by a PON, e.g., for downstream data traffic (OLT to ONU/ONT direction), is "continuous mode" communications. In one implementation, a receiver, such as an ONU/ONT, equalizes a received data channel using either one of a blind equalization or a decision directed equalization method.

[0055] A flow chart for an exemplary PON activation process is shown in **FIG. 9**. In a PON in which a decision directed method is used for training an ONU/ONT receiver, a continuous mode transmitter, such as an OLT transmitter, sends a training sequence **900** multiplexed within a PON's TC-Layer downstream frame protocol. In a PON in which a blind equalization method is used, the OLT needed not send this training sequence **900**. An ONU/ONT equalizes its received downstream channel **901** before it is able to receive and interpret PON network parameters **902**. If the OLT has not been previously informed of the existence of the ONU/ONT then the ONU/ONT awaits an upstream grant window **903** available for new ONU/ONTs to respond to the OLT with its serial number **904**. After the ONU/ONT has received an upstream grant window and processed PON system parameters, the ONU/ONT sends a training sequence **905** and then its serial number **904** to the OLT. In a PON in which blind equalization is used the ONU/ONT need not send a training sequence **905**. After the OLT has received the ONU/ONT serial number the OLT will assign and send the ONU/ONT an identification number. If the ONU/ONT does not receive an identification number **906a**, the ONU/ONT returns to waiting for an upstream grant window for new ONU/ONTs **903**. Once the ONU/ONT receives an identification

number **906b**, the OLT performs ranging **907** to determine the distance between the OLT and ONU/ONT and then compensates for the communication timing delays. The ONU/ONT can perform updates continuously or periodically depending on the equalization method employed. After the downstream continuous mode channel and the upstream burst mode channel have been equalized, both ends of the PON transmission link are equalized and the ONU/ONT enters its normal operating state **908**.

**Link Connection Errors**

[0056] A system has been proposed that includes demultiplexing across multiple fibers as is shown above with reference to **FIG.s 3-6.** In systems using demultiplexing across multiple fibers, fibers can be connected incorrectly at installation. For example, a first transceiver **100**, such as is shown in **FIG. 3**, with fibers **314a** and **314b** can be connected to a second transceiver **101** with fiber **314b** connected in place of fiber **314a**, and fiber **314a** connected in place of fiber **314b**. The incorrect connection in this example may cause the first and second transceivers to not establish communications due to misalignment of bits during multiplexing of received data.

[0057] Information in a frame is used to synchronize a receiver (e.g., transceiver **101**) with the beginning of a frame (e.g., a "frame delimiter"). The process of discovering the beginning of a frame is called "frame synchronization." In specific protocols such as G.984, the downstream frame delimiter is called Psync, the upstream frame delimiter is called Delimiter and the process of frame synchronization in the downstream is called the HUNT. In one implementation, TC-Layer/MAC **305** block performs frame synchronization. In one implementation, specific bit patterns or values for frame delimiters are used that are unique for each fiber to differentiate one fiber from another or the order of fiber connections to correctly multiplex received data. The use of unique frame delimiters allows the TC-Layer/MAC **305** block to change the alignment of received data bits during multiplexing to adjust for the order of the fiber connections, without having to physically change the connections. Management of the bit alignment in this implementation forms part of the TC-Layer/MAC's **305** block demultiplexing management responsibilities and functions.

[0058] Alternatively, the TC-Layer/MAC **305** block may assume an order for the fiber connections to determine the alignment of bits for multiplexing the received data and attempt frame synchronization. After a period of time with no frame synchronization success, the TC-Layer/MAC **305** block may assume a different order for the fiber connections and change the alignment of bits during multiplexing and attempt frame synchronization again. The process may repeat, including changing the alignment of bits to reflect other configurations during the multiplexing, and frame synchronization attempts continue until frame synchronization succeeds. In yet another alternative implementation, the TC-Layer/MAC **305** block may assume and attempt frame synchronization on all possible combinations of bit alignments in parallel, one of which will succeed in achieving frame synchronization.

[0059] Although the invention has been described in terms of particular implementations, one of ordinary skill in the art, in light of this teaching, can generate additional implementations and modifications without departing from the spirit of or exceeding the scope of the claimed invention. Accordingly, it is to be understood that the drawings and descriptions herein are proffered by way of example to facilitate comprehension of the invention and should not be construed to limit the scope thereof.

What is claimed is:

1. A method for m-ary modulation communication across an optical network by an optical transceiver module comprising of:

   receiving a first electrical binary data signal through a system interface of the optical transceiver module;

   converting the first electrical binary data signal in the optical transceiver module to a first electrical m-ary modulation signal;

   amplifying the first electrical m-ary modulation signal to drive an optical transmitter of the optical transceiver module;

   emitting a first optical signal on a first wavelength responsive to and representative of the amplified first electrical m-ary modulation signal from the optical transmitter of the optical transceiver module;

   receiving a second optical signal on a second wavelength and producing an electrical signal from an optical detector of the optical transceiver module;

   amplifying the electrical signal to facilitate clock and data recovery in the optical transceiver module;

   equalizing the amplified electrical signal and recovering clock data information to produce a second m-ary modulation signal in the optical transceiver module;

   demodulating the second m-ary modulation signal according to a second electrical binary signal; and

   transmitting the second electrical binary signal through the system interface of the optical transceiver module.

2. The method of claim 1, whereby the form factor of the optical transceiver module is selected from the group consisting of: SFP; SFP+; XFP; X2; XENPAK; XPA; and 300 pin transceiver form factors.

3. The method of claim 1, whereby the m-ary modulation method is selected from the group consisting of:

   quadrature amplitude modulation (QAM);

   QAM-32;

QAM-256;
quadrature phase shift keying (QPSK);
differential QPSK;
return-to-zero QPSK;
dual-polarized QPSK;
orthogonal frequency division multiplexing (OFDM);
pulse amplitude modulation (PAM);
PAM-5; and
PAM-17.

4. The method of claim 1, further comprising of:

storing a first set of coefficients which improve processing of the electrical signal.

5. The method of claim 1, further comprising of:

loading a second set of stored coefficients which improve processing of the electrical signal.

## ABSTRACT

Processing a received optical signal in an optical communication network includes equalizing a received optical signal to provide an equalized signal, demodulating the equalized signal according to an m-ary modulation format to provide a demodulated signal, decoding the demodulated signal according to an inner code to provide an inner-decoded signal, and decoding the inner-decoded signal according to an outer code. Other aspects include other features such as equalizing an optical channel including storing channel characteristics for the optical channel associated with a client, loading the stored channel characteristics during a waiting period between bursts on the channel, and equalizing a received burst from the client using the loaded channel characteristics.

PTO/AIA/01 (06-12)
Approved for use through 01/31/2014. OMB 0651-0032
U.S. Patent and Trademark Office; U.S. DEPARTMENT OF COMMERCE
Under the Paperwork Reduction Act of 1995, no persons are required to respond to a collection of information unless it displays a valid OMB control number.

# DECLARATION (37 CFR 1.63) FOR UTILITY OR DESIGN APPLICATION USING AN APPLICATION DATA SHEET (37 CFR 1.76)

| **Title of Invention** | SYSTEM AND METHOD FOR PERFORMING HIGH-SPEED COMMUNICATIONS OVER FIBER OPTICAL NETWORKS |
|---|---|

As the below named inventor, I hereby declare that:

This declaration is directed to:

- [x] The attached application, or
- [ ] United States application or PCT international application number _____

filed on _____.

The above-identified application was made or authorized to be made by me.

I believe that I am the original inventor or an original joint inventor of a claimed invention in the application.

I hereby acknowledge that any willful false statement made in this declaration is punishable under 18 U.S.C. 1001 by fine or imprisonment of not more than five (5) years, or both.

## WARNING:

Petitioner/applicant is cautioned to avoid submitting personal information in documents filed in a patent application that may contribute to identity theft. Personal information such as social security numbers, bank account numbers, or credit card numbers (other than a check or credit card authorization form PTO-2038 submitted for payment purposes) is never required by the USPTO to support a petition or an application. If this type of personal information is included in documents submitted to the USPTO, petitioners/applicants should consider redacting such personal information from the documents before submitting them to the USPTO. Petitioner/applicant is advised that the record of a patent application is available to the public after publication of the application (unless a non-publication request in compliance with 37 CFR 1.213(a) is made in the application) or issuance of a patent. Furthermore, the record from an abandoned application may also be available to the public if the application is referenced in a published application or an issued patent (see 37 CFR 1.14). Checks and credit card authorization forms PTO-2038 submitted for payment purposes are not retained in the application file and therefore are not publicly available.

LEGAL NAME OF INVENTOR

Inventor: Alexander I. Soto Date (Optional) :_____

Signature: /Alexander Soto/

Note: An application data sheet (PTO/SB/14 or equivalent), including naming the entire inventive entity, must accompany this form or must have been previously filed. Use an additional PTO/AIA/01 form for each additional inventor.

This collection of information is required by 35 U.S.C. 115 and 37 CFR 1.63. The information is required to obtain or retain a benefit by the public which is to file (and by the USPTO to process) an application. Confidentiality is governed by 35 U.S.C. 122 and 37 CFR 1.11 and 1.14. This collection is estimated to take 1 minute to complete, including gathering, preparing, and submitting the completed application form to the USPTO. Time will vary depending upon the individual case. Any comments on the amount of time you require to complete this form and/or suggestions for reducing this burden, should be sent to the Chief Information Officer, U.S. Patent and Trademark Office, U.S. Department of Commerce, P.O. Box 1450, Alexandria, VA 22313-1450. DO NOT SEND FEES OR COMPLETED FORMS TO THIS ADDRESS. **SEND TO: Commissioner for Patents, P.O. Box 1450, Alexandria, VA 22313-1450.**

*If you need assistance in completing the form, call 1-800-PTO-9199 and select option 2.*

# Privacy Act Statement

The **Privacy Act of 1974 (P.L. 93-579)** requires that you be given certain information in connection with your submission of the attached form related to a patent application or patent. Accordingly, pursuant to the requirements of the Act, please be advised that: (1) the general authority for the collection of this information is 35 U.S.C. 2(b)(2); (2) furnishing of the information solicited is voluntary; and (3) the principal purpose for which the information is used by the U.S. Patent and Trademark Office is to process and/or examine your submission related to a patent application or patent. If you do not furnish the requested information, the U.S. Patent and Trademark Office may not be able to process and/or examine your submission, which may result in termination of proceedings or abandonment of the application or expiration of the patent.

The information provided by you in this form will be subject to the following routine uses:

1. The information on this form will be treated confidentially to the extent allowed under the Freedom of Information Act (5 U.S.C. 552) and the Privacy Act (5 U.S.C 552a). Records from this system of records may be disclosed to the Department of Justice to determine whether disclosure of these records is required by the Freedom of Information Act.
2. A record from this system of records may be disclosed, as a routine use, in the course of presenting evidence to a court, magistrate, or administrative tribunal, including disclosures to opposing counsel in the course of settlement negotiations.
3. A record in this system of records may be disclosed, as a routine use, to a Member of Congress submitting a request involving an individual, to whom the record pertains, when the individual has requested assistance from the Member with respect to the subject matter of the record.
4. A record in this system of records may be disclosed, as a routine use, to a contractor of the Agency having need for the information in order to perform a contract. Recipients of information shall be required to comply with the requirements of the Privacy Act of 1974, as amended, pursuant to 5 U.S.C. 552a(m).
5. A record related to an International Application filed under the Patent Cooperation Treaty in this system of records may be disclosed, as a routine use, to the International Bureau of the World Intellectual Property Organization, pursuant to the Patent Cooperation Treaty.
6. A record in this system of records may be disclosed, as a routine use, to another federal agency for purposes of National Security review (35 U.S.C. 181) and for review pursuant to the Atomic Energy Act (42 U.S.C. 218(c)).
7. A record from this system of records may be disclosed, as a routine use, to the Administrator, General Services, or his/her designee, during an inspection of records conducted by GSA as part of that agency's responsibility to recommend improvements in records management practices and programs, under authority of 44 U.S.C. 2904 and 2906. Such disclosure shall be made in accordance with the GSA regulations governing inspection of records for this purpose, and any other relevant ( *i.e.*, GSA or Commerce) directive. Such disclosure shall not be used to make determinations about individuals.
8. A record from this system of records may be disclosed, as a routine use, to the public after either publication of the application pursuant to 35 U.S.C. 122(b) or issuance of a patent pursuant to 35 U.S.C. 151. Further, a record may be disclosed, subject to the limitations of 37 CFR 1.14, as a routine use, to the public if the record was filed in an application which became abandoned or in which the proceedings were terminated and which application is referenced by either a published application, an application open to public inspection or an issued patent.
9. A record from this system of records may be disclosed, as a routine use, to a Federal, State, or local law enforcement agency, if the USPTO becomes aware of a violation or potential violation of law or regulation.

PTO/AIA/01 (06-12)
Approved for use through 01/31/2014. OMB 0651-0032
U.S. Patent and Trademark Office; U.S. DEPARTMENT OF COMMERCE
Under the Paperwork Reduction Act of 1995, no persons are required to respond to a collection of information unless it displays a valid OMB control number.

# DECLARATION (37 CFR 1.63) FOR UTILITY OR DESIGN APPLICATION USING AN APPLICATION DATA SHEET (37 CFR 1.76)

| | |
|---|---|
| **Title of Invention** | SYSTEM AND METHOD FOR PERFORMING HIGH-SPEED COMMUNICATIONS OVER FIBER OPTICAL NETWORKS |

As the below named inventor, I hereby declare that:

This declaration is directed to:

- [x] The attached application, or
- [ ] United States application or PCT international application number _____ filed on _____.

The above-identified application was made or authorized to be made by me.

I believe that I am the original inventor or an original joint inventor of a claimed invention in the application.

I hereby acknowledge that any willful false statement made in this declaration is punishable under 18 U.S.C. 1001 by fine or imprisonment of not more than five (5) years, or both.

## WARNING:

Petitioner/applicant is cautioned to avoid submitting personal information in documents filed in a patent application that may contribute to identity theft. Personal information such as social security numbers, bank account numbers, or credit card numbers (other than a check or credit card authorization form PTO-2038 submitted for payment purposes) is never required by the USPTO to support a petition or an application. If this type of personal information is included in documents submitted to the USPTO, petitioners/applicants should consider redacting such personal information from the documents before submitting them to the USPTO. Petitioner/applicant is advised that the record of a patent application is available to the public after publication of the application (unless a non-publication request in compliance with 37 CFR 1.213(a) is made in the application) or issuance of a patent. Furthermore, the record from an abandoned application may also be available to the public if the application is referenced in a published application or an issued patent (see 37 CFR 1.14). Checks and credit card authorization forms PTO-2038 submitted for payment purposes are not retained in the application file and therefore are not publicly available.

LEGAL NAME OF INVENTOR

Inventor: Walter G. Soto Date (Optional) :_____

Signature: /Walter Soto/

Note: An application data sheet (PTO/SB/14 or equivalent), including naming the entire inventive entity, must accompany this form or must have been previously filed. Use an additional PTO/AIA/01 form for each additional inventor.

This collection of information is required by 35 U.S.C. 115 and 37 CFR 1.63. The information is required to obtain or retain a benefit by the public which is to file (and by the USPTO to process) an application. Confidentiality is governed by 35 U.S.C. 122 and 37 CFR 1.11 and 1.14. This collection is estimated to take 1 minute to complete, including gathering, preparing, and submitting the completed application form to the USPTO. Time will vary depending upon the individual case. Any comments on the amount of time you require to complete this form and/or suggestions for reducing this burden, should be sent to the Chief Information Officer, U.S. Patent and Trademark Office, U.S. Department of Commerce, P.O. Box 1450, Alexandria, VA 22313-1450. DO NOT SEND FEES OR COMPLETED FORMS TO THIS ADDRESS. **SEND TO: Commissioner for Patents, P.O. Box 1450, Alexandria, VA 22313-1450.**

*If you need assistance in completing the form, call 1-800-PTO-9199 and select option 2.*

# Privacy Act Statement

The **Privacy Act of 1974 (P.L. 93-579)** requires that you be given certain information in connection with your submission of the attached form related to a patent application or patent. Accordingly, pursuant to the requirements of the Act, please be advised that: (1) the general authority for the collection of this information is 35 U.S.C. 2(b)(2); (2) furnishing of the information solicited is voluntary; and (3) the principal purpose for which the information is used by the U.S. Patent and Trademark Office is to process and/or examine your submission related to a patent application or patent. If you do not furnish the requested information, the U.S. Patent and Trademark Office may not be able to process and/or examine your submission, which may result in termination of proceedings or abandonment of the application or expiration of the patent.

The information provided by you in this form will be subject to the following routine uses:

1. The information on this form will be treated confidentially to the extent allowed under the Freedom of Information Act (5 U.S.C. 552) and the Privacy Act (5 U.S.C 552a). Records from this system of records may be disclosed to the Department of Justice to determine whether disclosure of these records is required by the Freedom of Information Act.
2. A record from this system of records may be disclosed, as a routine use, in the course of presenting evidence to a court, magistrate, or administrative tribunal, including disclosures to opposing counsel in the course of settlement negotiations.
3. A record in this system of records may be disclosed, as a routine use, to a Member of Congress submitting a request involving an individual, to whom the record pertains, when the individual has requested assistance from the Member with respect to the subject matter of the record.
4. A record in this system of records may be disclosed, as a routine use, to a contractor of the Agency having need for the information in order to perform a contract. Recipients of information shall be required to comply with the requirements of the Privacy Act of 1974, as amended, pursuant to 5 U.S.C. 552a(m).
5. A record related to an International Application filed under the Patent Cooperation Treaty in this system of records may be disclosed, as a routine use, to the International Bureau of the World Intellectual Property Organization, pursuant to the Patent Cooperation Treaty.
6. A record in this system of records may be disclosed, as a routine use, to another federal agency for purposes of National Security review (35 U.S.C. 181) and for review pursuant to the Atomic Energy Act (42 U.S.C. 218(c)).
7. A record from this system of records may be disclosed, as a routine use, to the Administrator, General Services, or his/her designee, during an inspection of records conducted by GSA as part of that agency's responsibility to recommend improvements in records management practices and programs, under authority of 44 U.S.C. 2904 and 2906. Such disclosure shall be made in accordance with the GSA regulations governing inspection of records for this purpose, and any other relevant ( *i.e.*, GSA or Commerce) directive. Such disclosure shall not be used to make determinations about individuals.
8. A record from this system of records may be disclosed, as a routine use, to the public after either publication of the application pursuant to 35 U.S.C. 122(b) or issuance of a patent pursuant to 35 U.S.C. 151. Further, a record may be disclosed, subject to the limitations of 37 CFR 1.14, as a routine use, to the public if the record was filed in an application which became abandoned or in which the proceedings were terminated and which application is referenced by either a published application, an application open to public inspection or an issued patent.
9. A record from this system of records may be disclosed, as a routine use, to a Federal, State, or local law enforcement agency, if the USPTO becomes aware of a violation or potential violation of law or regulation.

PTO/AIA/14 (11-15)
Approved for use through 04/30/2017. OMB 0651-0032
U.S. Patent and Trademark Office; U.S. DEPARTMENT OF COMMERCE
Under the Paperwork Reduction Act of 1995, no persons are required to respond to a collection of information unless it contains a valid OMB control number.

| Application Data Sheet 37 CFR 1.76 | Attorney Docket Number | UBI-002D |
|---|---|---|
| | Application Number | |
| Title of Invention | SYSTEM AND METHOD FOR PERFORMING HIGH-SPEED COMMUNICATIONS OVER FIBER OPTICAL NETWORKS | |

The application data sheet is part of the provisional or nonprovisional application for which it is being submitted. The following form contains the bibliographic data arranged in a format specified by the United States Patent and Trademark Office as outlined in 37 CFR 1.76.
This document may be completed electronically and submitted to the Office in electronic format using the Electronic Filing System (EFS) or the document may be printed and included in a paper filed application.

## Secrecy Order 37 CFR 5.2:

☐ Portions or all of the application associated with this Application Data Sheet may fall under a Secrecy Order pursuant to 37 CFR 5.2 (Paper filers only. Applications that fall under Secrecy Order may not be filed electronically.)

## Inventor Information:

**Inventor** 1 Remove

**Legal Name**

| Prefix | Given Name | Middle Name | Family Name | Suffix |
|---|---|---|---|---|
| | Alexander | | Soto | |

**Residence Information (Select One)** ● US Residency Non US Residency Active US Military Service

| City | San Diego | State/Province | CA | Country of Residence i | US |
|---|---|---|---|---|---|

**Mailing Address of Inventor:**

| | | | |
|---|---|---|---|
| Address 1 | 7673 Hazard Center Dr | | |
| Address 2 | | | |
| City | San Diego | State/Province | CA |
| Postal Code | 92108 | Country i | US |

**Inventor** 2 Remove

**Legal Name**

| Prefix | Given Name | Middle Name | Family Name | Suffix |
|---|---|---|---|---|
| | Walter | | Soto | |

**Residence Information (Select One)** ◉ US Residency Non US Residency Active US Military Service

| City | San Clemente | State/Province | CA | Country of Residence i | US |
|---|---|---|---|---|---|

**Mailing Address of Inventor:**

| | | | |
|---|---|---|---|
| Address 1 | 2020 Costero Hermoso | | |
| Address 2 | | | |
| City | San Clemente | State/Province | CA |
| Postal Code | 92673 | Country i | US |

All Inventors Must Be Listed - Additional Inventor Information blocks may be generated within this form by selecting the **Add** button. Add

## Correspondence Information:

**Enter either Customer Number or complete the Correspondence Information section below.**
**For further information see 37 CFR 1.33(a).**

Ex. 1024.247

PTO/AIA/14 (11-15)
Approved for use through 04/30/2017. OMB 0651-0032
U.S. Patent and Trademark Office; U.S. DEPARTMENT OF COMMERCE
Under the Paperwork Reduction Act of 1995, no persons are required to respond to a collection of information unless it contains a valid OMB control number.

| **Application Data Sheet 37 CFR 1.76** | Attorney Docket Number | UBI-002D |
|---|---|---|
| | Application Number | |
| Title of Invention | SYSTEM AND METHOD FOR PERFORMING HIGH-SPEED COMMUNICATIONS OVER FIBER OPTICAL NETWORKS | |

☐ **An Address is being provided for the correspondence Information of this application.**

| | | | |
|---|---|---|---|
| **Customer Number** | 93749 | | |
| **Email Address** | alexander.i.soto@gmail.com | Add Email | Remove Email |

## Application Information:

| | | | |
|---|---|---|---|
| **Title of the Invention** | SYSTEM AND METHOD FOR PERFORMING HIGH-SPEED COMMUNICATIONS OVER FIBER OPTICAL NETWORKS | | |
| **Attorney Docket Number** | UBI-002D | **Small Entity Status Claimed** | ☒ |
| **Application Type** | Nonprovisional | | |
| **Subject Matter** | Utility | | |
| **Total Number of Drawing Sheets (if any)** | 9 | **Suggested Figure for Publication (if any)** | 6B |

## Filing By Reference:

Only complete this section when filing an application by reference under 35 U.S.C. 111(c) and 37 CFR 1.57(a). Do not complete this section if application papers including a specification and any drawings are being filed. Any domestic benefit or foreign priority information must be provided in the appropriate section(s) below (i.e., "Domestic Benefit/National Stage Information" and "Foreign Priority Information").

For the purposes of a filing date under 37 CFR 1.53(b), the description and any drawings of the present application are replaced by this reference to the previously filed application, subject to conditions and requirements of 37 CFR 1.57(a).

| Application number of the previously filed application | Filing date (YYYY-MM-DD) | Intellectual Property Authority or Country |
|---|---|---|
| | | |

## Publication Information:

☐ Request Early Publication (Fee required at time of Request 37 CFR 1.219)

☐ **Request Not to Publish.** I hereby request that the attached application not be published under 35 U.S.C. 122(b) and certify that the invention disclosed in the attached application **has not and will not** be the subject of an application filed in another country, or under a multilateral international agreement, that requires publication at eighteen months after filing.

## Representative Information:

Representative information should be provided for all practitioners having a power of attorney in the application. Providing this information in the Application Data Sheet does not constitute a power of attorney in the application (see 37 CFR 1.32).
Either enter Customer Number or complete the Representative Name section below. If both sections are completed the customer Number will be used for the Representative Information during processing.

| | | | |
|---|---|---|---|
| Please Select One: | ● Customer Number | US Patent Practitioner | ○ Limited Recognition (37 CFR 11.9) |
| Customer Number | 93749 | | |

**Ex. 1024.248**

Under the Paperwork Reduction Act of 1995, no persons are required to respond to a collection of information unless it contains a valid OMB control number.

| Application Data Sheet 37 CFR 1.76 | Attorney Docket Number | UBI-002D |
|---|---|---|
| | Application Number | |
| Title of Invention | SYSTEM AND METHOD FOR PERFORMING HIGH-SPEED COMMUNICATIONS OVER FIBER OPTICAL NETWORKS | |

## Domestic Benefit/National Stage Information:

This section allows for the applicant to either claim benefit under 35 U.S.C. 119(e), 120, 121, 365(c), or 386(c) or indicate National Stage entry from a PCT application. Providing benefit claim information in the Application Data Sheet constitutes the specific reference required by 35 U.S.C. 119(e) or 120, and 37 CFR 1.78.
When referring to the current application, please leave the "Application Number" field blank.

| Prior Application Status | Pending | | Remove |
|---|---|---|---|
| Application Number | Continuity Type | Prior Application Number | Filing or 371(c) Date (YYYY-MM-DD) |
| | Continuation of | 12512968 | 2009-07-30 |
| Prior Application Status | Abandoned | | Remove |
| Application Number | Continuity Type | Prior Application Number | Filing or 371(c) Date (YYYY-MM-DD) |
| 12512968 | Continuation in part of | 11772187 | 2007-06-30 |

| Prior Application Status | Patented | | | | Remove |
|---|---|---|---|---|---|
| Application Number | Continuity Type | Prior Application Number | Filing Date (YYYY-MM-DD) | Patent Number | Issue Date (YYYY-MM-DD) |
| 117722187 | Continuation in part of | 10865547 | 2004-06-10 | 7242868 | 2007-07-10 |

| Prior Application Status | Expired | | Remove |
|---|---|---|---|
| Application Number | Continuity Type | Prior Application Number | Filing or 371(c) Date (YYYY-MM-DD) |
| 10865547 | Claims benefit of provisional | 60480488 | 2003-06-21 |
| Prior Application Status | Expired | | Remove |
| Application Number | Continuity Type | Prior Application Number | Filing or 371(c) Date (YYYY-MM-DD) |
| 10865547 | Claims benefit of provisional | 60477845 | 2003-06-10 |

Additional Domestic Benefit/National Stage Data may be generated within this form by selecting the **Add** button. Add

## Foreign Priority Information:

This section allows for the applicant to claim priority to a foreign application. Providing this information in the application data sheet constitutes the claim for priority as required by 35 U.S.C. 119(b) and 37 CFR 1.55. When priority is claimed to a foreign application that is eligible for retrieval under the priority document exchange program (PDX)[i] the information will be used by the Office to automatically attempt retrieval pursuant to 37 CFR 1.55(i)(1) and (2). Under the PDX program, applicant bears the ultimate responsibility for ensuring that a copy of the foreign application is received by the Office from the participating foreign intellectual property office, or a certified copy of the foreign priority application is filed, within the time period specified in 37 CFR 1.55(g)(1).

Under the Paperwork Reduction Act of 1995, no persons are required to respond to a collection of information unless it contains a valid OMB control number.

| **Application Data Sheet 37 CFR 1.76** | Attorney Docket Number | UBI-002D |
|---|---|---|
| | Application Number | |
| Title of Invention | SYSTEM AND METHOD FOR PERFORMING HIGH-SPEED COMMUNICATIONS OVER FIBER OPTICAL NETWORKS | |

Remove

| Application Number | Country[i] | Filing Date (YYYY-MM-DD) | Access Code[i] (if applicable) |
|---|---|---|---|
| | | | |

Additional Foreign Priority Data may be generated within this form by selecting the **Add** button. Add

## Statement under 37 CFR 1.55 or 1.78 for AIA (First Inventor to File) Transition Applications

☐ This application (1) claims priority to or the benefit of an application filed before March 16, 2013 and (2) also contains, or contained at any time, a claim to a claimed invention that has an effective filing date on or after March 16, 2013.
NOTE: By providing this statement under 37 CFR 1.55 or 1.78, this application, with a filing date on or after March 16, 2013, will be examined under the first inventor to file provisions of the AIA.

Under the Paperwork Reduction Act of 1995, no persons are required to respond to a collection of information unless it contains a valid OMB control number.

| Application Data Sheet 37 CFR 1.76 | Attorney Docket Number | UBI-002D |
|---|---|---|
| | Application Number | |
| Title of Invention | SYSTEM AND METHOD FOR PERFORMING HIGH-SPEED COMMUNICATIONS OVER FIBER OPTICAL NETWORKS | |

## Authorization or Opt-Out of Authorization to Permit Access:

When this Application Data Sheet is properly signed and filed with the application, applicant has provided written authority to permit a participating foreign intellectual property (IP) office access to the instant application-as-filed (see paragraph A in subsection 1 below) and the European Patent Office (EPO) access to any search results from the instant application (see paragraph B in subsection 1 below).

Should applicant choose not to provide an authorization identified in subsection 1 below, applicant **must opt-out** of the authorization by checking the corresponding box A or B or both in subsection 2 below.

**NOTE**: This section of the Application Data Sheet is **ONLY** reviewed and processed with the **INITIAL** filing of an application. After the initial filing of an application, an Application Data Sheet cannot be used to provide or rescind authorization for access by a foreign IP office(s). Instead, Form PTO/SB/39 or PTO/SB/69 must be used as appropriate.

**1. Authorization to Permit Access by a Foreign Intellectual Property Office(s)**

**A. Priority Document Exchange (PDX)** - Unless box A in subsection 2 (opt-out of authorization) is checked, the undersigned hereby **grants the USPTO authority** to provide the European Patent Office (EPO), the Japan Patent Office (JPO), the Korean Intellectual Property Office (KIPO), the State Intellectual Property Office of the People's Republic of China (SIPO), the World Intellectual Property Organization (WIPO), and any other foreign intellectual property office participating with the USPTO in a bilateral or multilateral priority document exchange agreement in which a foreign application claiming priority to the instant patent application is filed, access to: (1) the instant patent application-as-filed and its related bibliographic data, (2) any foreign or domestic application to which priority or benefit is claimed by the instant application and its related bibliographic data, and (3) the date of filing of this Authorization. See 37 CFR 1.14(h)(1).

**B. Search Results from U.S. Application to EPO** - Unless box B in subsection 2 (opt-out of authorization) is checked, the undersigned hereby **grants the USPTO authority** to provide the EPO access to the bibliographic data and search results from the instant patent application when a European patent application claiming priority to the instant patent application is filed. See 37 CFR 1.14(h)(2).

The applicant is reminded that the EPO's Rule 141(1) EPC (European Patent Convention) requires applicants to submit a copy of search results from the instant application without delay in a European patent application that claims priority to the instant application.

**2. Opt-Out of Authorizations to Permit Access by a Foreign Intellectual Property Office(s)**

☐ A. Applicant **DOES NOT** authorize the USPTO to permit a participating foreign IP office access to the instant application-as-filed. If this box is checked, the USPTO will not be providing a participating foreign IP office with any documents and information identified in subsection 1A above.

☐ B. Applicant **DOES NOT** authorize the USPTO to transmit to the EPO any search results from the instant patent application. If this box is checked, the USPTO will not be providing the EPO with search results from the instant application.

**NOTE:** Once the application has published or is otherwise publicly available, the USPTO may provide access to the application in accordance with 37 CFR 1.14.

PTO/AIA/14 (11-15)
Approved for use through 04/30/2017. OMB 0651-0032
U.S. Patent and Trademark Office; U.S. DEPARTMENT OF COMMERCE
Under the Paperwork Reduction Act of 1995, no persons are required to respond to a collection of information unless it contains a valid OMB control number.

| Application Data Sheet 37 CFR 1.76 | Attorney Docket Number | UBI-002D |
|---|---|---|
| | Application Number | |
| Title of Invention | SYSTEM AND METHOD FOR PERFORMING HIGH-SPEED COMMUNICATIONS OVER FIBER OPTICAL NETWORKS | |

## Applicant Information:

Providing assignment information in this section does not substitute for compliance with any requirement of part 3 of Title 37 of CFR to have an assignment recorded by the Office.

**Applicant** 1 Remove

If the applicant is the inventor (or the remaining joint inventor or inventors under 37 CFR 1.45), this section should not be completed. The information to be provided in this section is the name and address of the legal representative who is the applicant under 37 CFR 1.43; or the name and address of the assignee, person to whom the inventor is under an obligation to assign the invention, or person who otherwise shows sufficient proprietary interest in the matter who is the applicant under 37 CFR 1.46. If the applicant is an applicant under 37 CFR 1.46 (assignee, person to whom the inventor is obligated to assign, or person who otherwise shows sufficient proprietary interest) together with one or more joint inventors, then the joint inventor or inventors who are also the applicant should be identified in this section.

Clear

| Assignee | Legal Representative under 35 U.S.C. 117 | Joint Inventor |
|---|---|---|
| Person to whom the inventor is obligated to assign. | Person who shows sufficient proprietary interest | |

If applicant is the legal representative, indicate the authority to file the patent application, the inventor is:

Name of the Deceased or Legally Incapacitated Inventor:

If the Applicant is an Organization check here. ☐

| Prefix | Given Name | Middle Name | Family Name | Suffix |
|---|---|---|---|---|
| | | | | |

**Mailing Address Information For Applicant:**

| | | | |
|---|---|---|---|
| **Address 1** | | | |
| Address 2 | | | |
| **City** | | **State/Province** | |
| **Country** | | Postal Code | |
| Phone Number | | Fax Number | |
| Email Address | | | |

Additional Applicant Data may be generated within this form by selecting the Add button. Add

## Assignee Information including Non-Applicant Assignee Information:

Providing assignment information in this section does not substitute for compliance with any requirement of part 3 of Title 37 of CFR to have an assignment recorded by the Office.

Under the Paperwork Reduction Act of 1995, no persons are required to respond to a collection of information unless it contains a valid OMB control number.

| **Application Data Sheet 37 CFR 1.76** | Attorney Docket Number | UBI-002D |
|---|---|---|
| | Application Number | |
| Title of Invention | SYSTEM AND METHOD FOR PERFORMING HIGH-SPEED COMMUNICATIONS OVER FIBER OPTICAL NETWORKS | |

**Assignee 1**

Complete this section if assignee information, including non-applicant assignee information, is desired to be included on the patent application publication. An assignee-applicant identified in the "Applicant Information" section will appear on the patent application publication as an applicant. For an assignee-applicant, complete this section only if identification as an assignee is also desired on the patent application publication.

Remove

If the Assignee or Non-Applicant Assignee is an Organization check here. ☐

| Prefix | **Given Name** | Middle Name | **Family Name** | Suffix |
|---|---|---|---|---|
| | | | | |

**Mailing Address Information For Assignee including Non-Applicant Assignee:**

| | | | |
|---|---|---|---|
| **Address 1** | | | |
| Address 2 | | | |
| **City** | | **State/Province** | |
| **Country** i | | Postal Code | |
| Phone Number | | Fax Number | |
| Email Address | | | |

Additional Assignee or Non-Applicant Assignee Data may be generated within this form by selecting the Add button. Add

## Signature:

Remove

**NOTE:** This Application Data Sheet must be signed in accordance with 37 CFR 1.33(b). **However, if this Application Data Sheet is submitted with the INITIAL filing of the application and either box A or B is not checked in subsection 2 of the "Authorization or Opt-Out of Authorization to Permit Access" section, then this form must also be signed in accordance with 37 CFR 1.14(c).**

This Application Data Sheet **must** be signed by a patent practitioner if one or more of the applicants is a **juristic entity** (e.g., corporation or association). If the applicant is two or more joint inventors, this form must be signed by a patent practitioner, **all** joint inventors who are the applicant, or one or more joint inventor-applicants who have been given power of attorney (e.g., see USPTO Form PTO/AIA/81) on behalf of **all** joint inventor-applicants.

See 37 CFR 1.4(d) for the manner of making signatures and certifications.

| **Signature** | /Alexander Soto/ | | | Date (YYYY-MM-DD) | 2016-04-10 |
|---|---|---|---|---|---|
| First Name | Alexander | Last Name | Soto | Registration Number | |

Additional Signature may be generated within this form by selecting the Add button. Add

**Ex. 1024.253**

Under the Paperwork Reduction Act of 1995, no persons are required to respond to a collection of information unless it contains a valid OMB control number.

| **Application Data Sheet 37 CFR 1.76** | Attorney Docket Number | UBI-002D |
|---|---|---|
| | Application Number | |
| Title of Invention | SYSTEM AND METHOD FOR PERFORMING HIGH-SPEED COMMUNICATIONS OVER FIBER OPTICAL NETWORKS | |

## Signature:

Remove

**NOTE:** This Application Data Sheet must be signed in accordance with 37 CFR 1.33(b). **However, if this Application Data Sheet is submitted with the INITIAL filing of the application and either box A or B is not checked in subsection 2 of the "Authorization or Opt-Out of Authorization to Permit Access" section, then this form must also be signed in accordance with 37 CFR 1.14(c).**

This Application Data Sheet **must** be signed by a patent practitioner if one or more of the applicants is a **juristic entity** (e.g., corporation or association). If the applicant is two or more joint inventors, this form must be signed by a patent practitioner, **all** joint inventors who are the applicant, or one or more joint inventor-applicants who have been given power of attorney (e.g., see USPTO Form PTO/AIA/81) on behalf of **all** joint inventor-applicants.

See 37 CFR 1.4(d) for the manner of making signatures and certifications.

| **Signature** | /Walter Soto/ | | | Date (YYYY-MM-DD) | 2016-04-10 |
|---|---|---|---|---|---|
| First Name | Walter | Last Name | Soto | Registration Number | |

Additional Signature may be generated within this form by selecting the Add button. Add

This collection of information is required by 37 CFR 1.76. The information is required to obtain or retain a benefit by the public which is to file (and by the USPTO to process) an application. Confidentiality is governed by 35 U.S.C. 122 and 37 CFR 1.14. This collection is estimated to take 23 minutes to complete, including gathering, preparing, and submitting the completed application data sheet form to the USPTO. Time will vary depending upon the individual case. Any comments on the amount of time you require to complete this form and/or suggestions for reducing this burden, should be sent to the Chief Information Officer, U.S. Patent and Trademark Office, U.S. Department of Commerce, P.O. Box 1450, Alexandria, VA 22313-1450. DO NOT SEND FEES OR COMPLETED FORMS TO THIS ADDRESS. **SEND TO: Commissioner for Patents, P.O. Box 1450, Alexandria, VA 22313-1450.**

# Privacy Act Statement

The Privacy Act of 1974 (P.L. 93-579) requires that you be given certain information in connection with your submission of the attached form related to a patent application or patent. Accordingly, pursuant to the requirements of the Act, please be advised that: (1) the general authority for the collection of this information is 35 U.S.C. 2(b)(2); (2) furnishing of the information solicited is voluntary; and (3) the principal purpose for which the information is used by the U.S. Patent and Trademark Office is to process and/or examine your submission related to a patent application or patent. If you do not furnish the requested information, the U.S. Patent and Trademark Office may not be able to process and/or examine your submission, which may result in termination of proceedings or abandonment of the application or expiration of the patent.

The information provided by you in this form will be subject to the following routine uses:

1 The information on this form will be treated confidentially to the extent allowed under the Freedom of Information Act (5 U.S.C. 552) and the Privacy Act (5 U.S.C. 552a). Records from this system of records may be disclosed to the Department of Justice to determine whether the Freedom of Information Act requires disclosure of these records.

2. A record from this system of records may be disclosed, as a routine use, in the course of presenting evidence to a court, magistrate, or administrative tribunal, including disclosures to opposing counsel in the course of settlement negotiations.

3 A record in this system of records may be disclosed, as a routine use, to a Member of Congress submitting a request involving an individual, to whom the record pertains, when the individual has requested assistance from the Member with respect to the subject matter of the record.

4. A record in this system of records may be disclosed, as a routine use, to a contractor of the Agency having need for the information in order to perform a contract. Recipients of information shall be required to comply with the requirements of the Privacy Act of 1974, as amended, pursuant to 5 U.S.C. 552a(m).

5. A record related to an International Application filed under the Patent Cooperation Treaty in this system of records may be disclosed, as a routine use, to the International Bureau of the World Intellectual Property Organization, pursuant to the Patent CooperationTreaty.

6. A record in this system of records may be disclosed, as a routine use, to another federal agency for purposes of National Security review (35 U.S.C. 181) and for review pursuant to the Atomic Energy Act (42 U.S.C. 218(c)).

7. A record from this system of records may be disclosed, as a routine use, to the Administrator, General Services, or his/her designee, during an inspection of records conducted by GSA as part of that agency's responsibility to recommend improvements in records management practices and programs, under authority of 44 U.S.C. 2904 and 2906. Such disclosure shall be made in accordance with the GSA regulations governing inspection of records for this purpose, and any other relevant (i.e., GSA or Commerce) directive. Such disclosure shall not be used to make determinations about individuals.

8. A record from this system of records may be disclosed, as a routine use, to the public after either publication of the application pursuant to 35 U.S.C. 122(b) or issuance of a patent pursuant to 35 U.S.C. 151. Further, a record may be disclosed, subject to the limitations of 37 CFR 1.14, as a routine use, to the public if the record was filed in an application which became abandoned or in which the proceedings were terminated and which application is referenced by either a published application, an application open to public inspections or an issued patent.

9. A record from this system of records may be disclosed, as a routine use, to a Federal, State, or local law enforcement agency, if the USPTO becomes aware of a violation or potential violation of law or regulation.

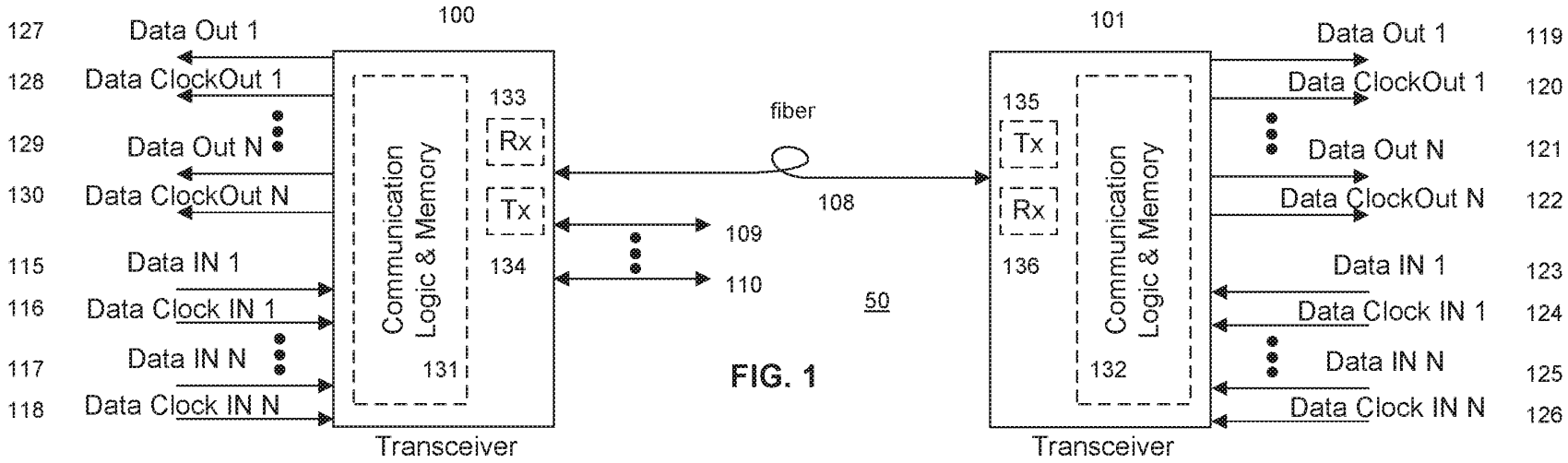
100
101
127 Data Out 1
128 Data ClockOut 1
129 Data Out N
130 Data ClockOut N
115 Data IN 1
116 Data Clock IN 1
117 Data IN N
118 Data Clock IN N
Communication Logic & Memory
131
133
Rx
Tx
134
Transceiver
fiber
108
109
110
50
135
Tx
Rx
136
Communication Logic & Memory
132
Transceiver
Data Out 1 119
Data ClockOut 1 120
Data Out N 121
Data ClockOut N 122
Data IN 1 123
Data Clock IN 1 124
Data IN N 125
Data Clock IN N 126

FIG. 1

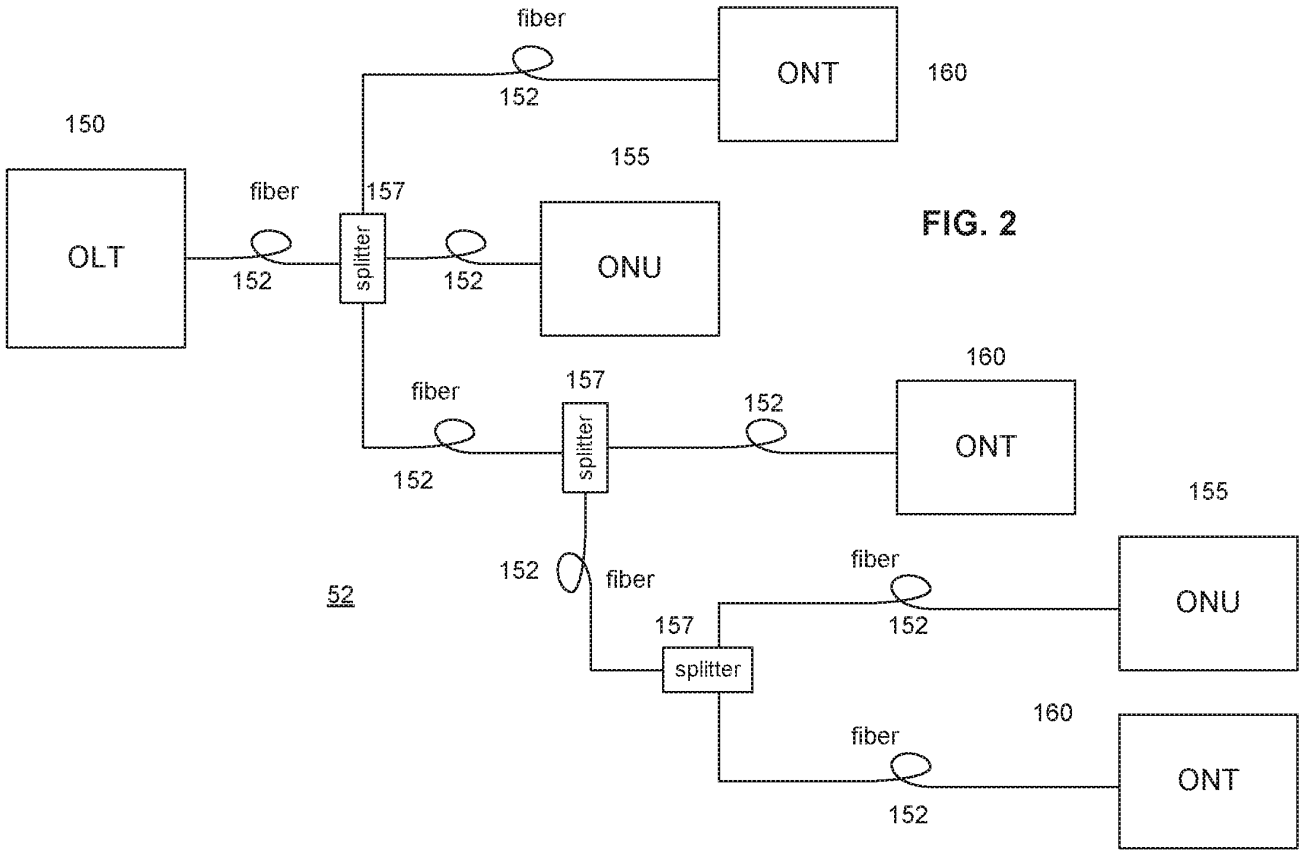
150
OLT
fiber
152
157
splitter
152
155
ONU
fiber
152
ONT
160
157
splitter
152
160
ONT
155
ONU
fiber
152
157
splitter
fiber
152
160
ONT
52

FIG. 2

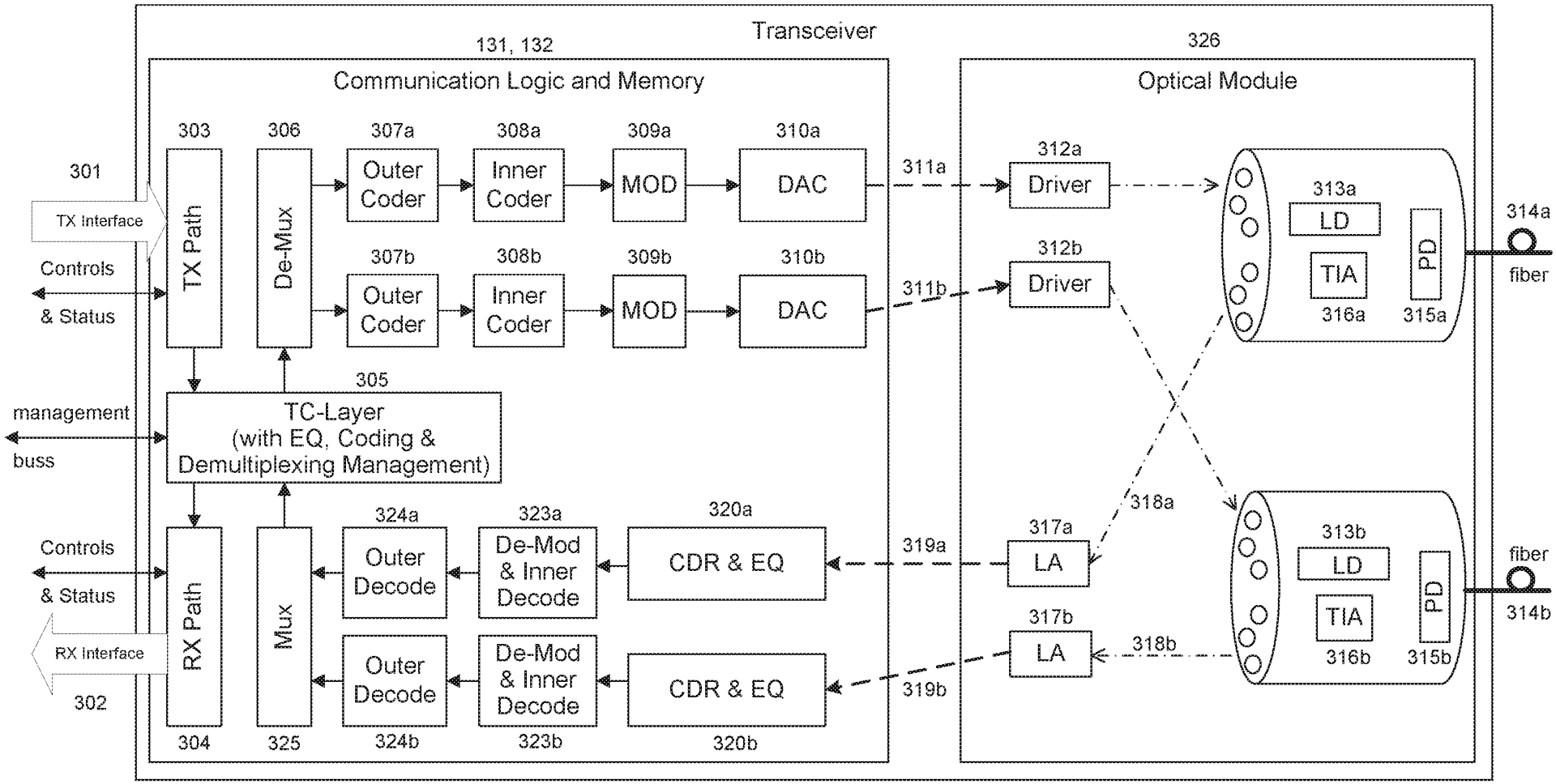
Transceiver
131, 132
Communication Logic and Memory
326
Optical Module
301
TX Interface
Controls
& Status
303
TX Path
306
De-Mux
307a
Outer Coder
308a
Inner Coder
309a
MOD
310a
DAC
307b
Outer Coder
308b
Inner Coder
309b
MOD
310b
DAC
311a
311b
312a
Driver
312b
Driver
313a
LD
TIA
316a
PD
315a
314a
fiber
305
TC-Layer
(with EQ, Coding &
Demultiplexing Management)
management
buss
Controls
& Status
RX Interface
302
RX Path
304
Mux
325
324a
Outer Decode
324b
Outer Decode
323a
De-Mod
& Inner
Decode
323b
De-Mod
& Inner
Decode
320a
CDR & EQ
320b
CDR & EQ
319a
319b
317a
LA
317b
LA
318a
318b
313b
LD
TIA
316b
PD
315b
fiber
314b

FIG. 3

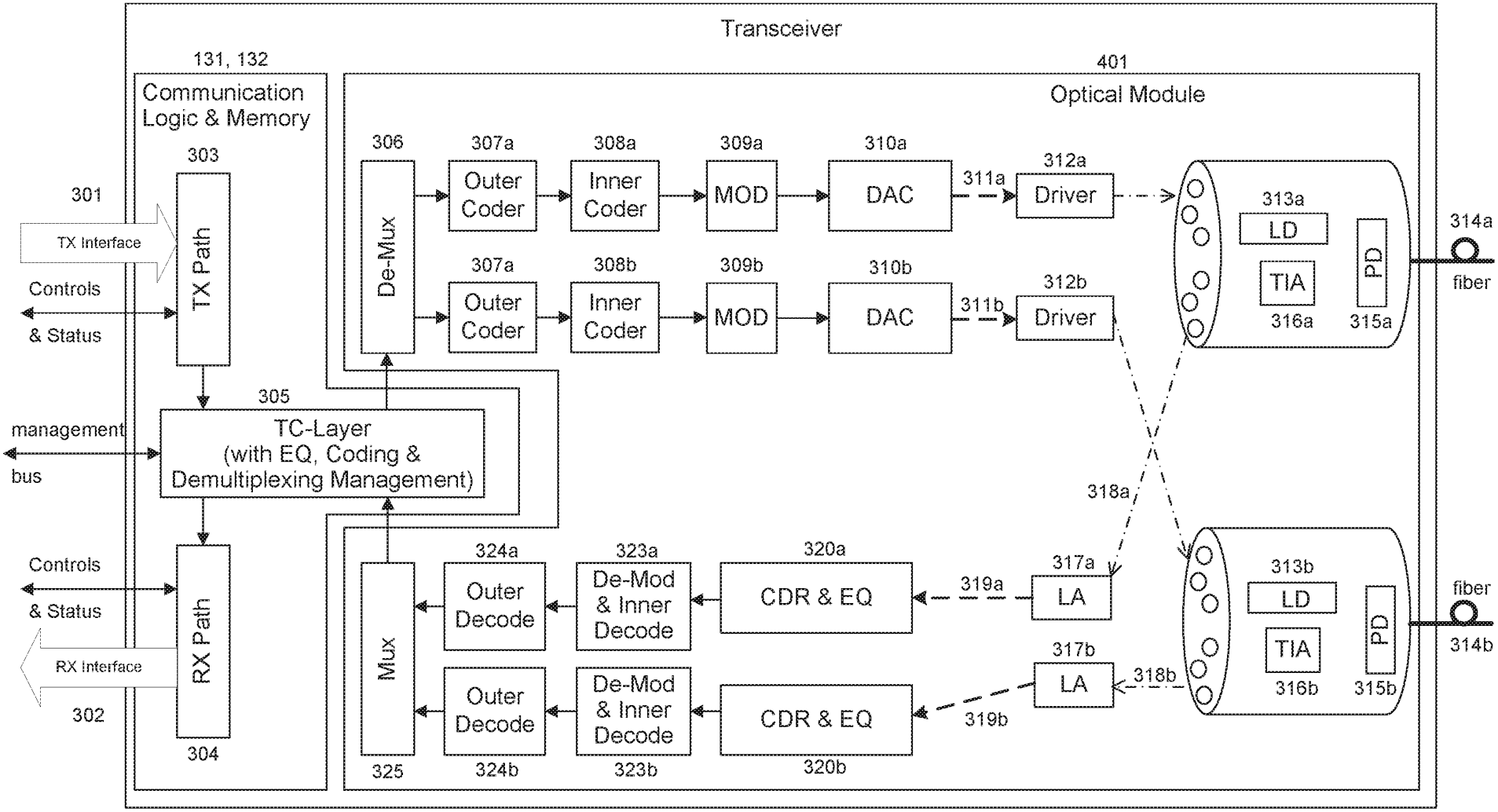
Transceiver
131, 132
Communication Logic & Memory
401
Optical Module
301
TX Interface
Controls & Status
303
TX Path
305
TC-Layer (with EQ, Coding & Demultiplexing Management)
management bus
Controls & Status
RX Interface
302
RX Path
304
306
De-Mux
307a
Outer Coder
308a
Inner Coder
309a
MOD
310a
DAC
311a
312a
Driver
307a
Outer Coder
308b
Inner Coder
309b
MOD
310b
DAC
311b
312b
Driver
313a
LD
TIA
316a
PD
315a
314a
fiber
318a
324a
Outer Decode
323a
De-Mod & Inner Decode
320a
CDR & EQ
319a
317a
LA
Mux
325
Outer Decode
324b
De-Mod & Inner Decode
323b
CDR & EQ
320b
319b
317b
LA
318b
313b
LD
TIA
316b
PD
315b
fiber
314b

FIG. 4

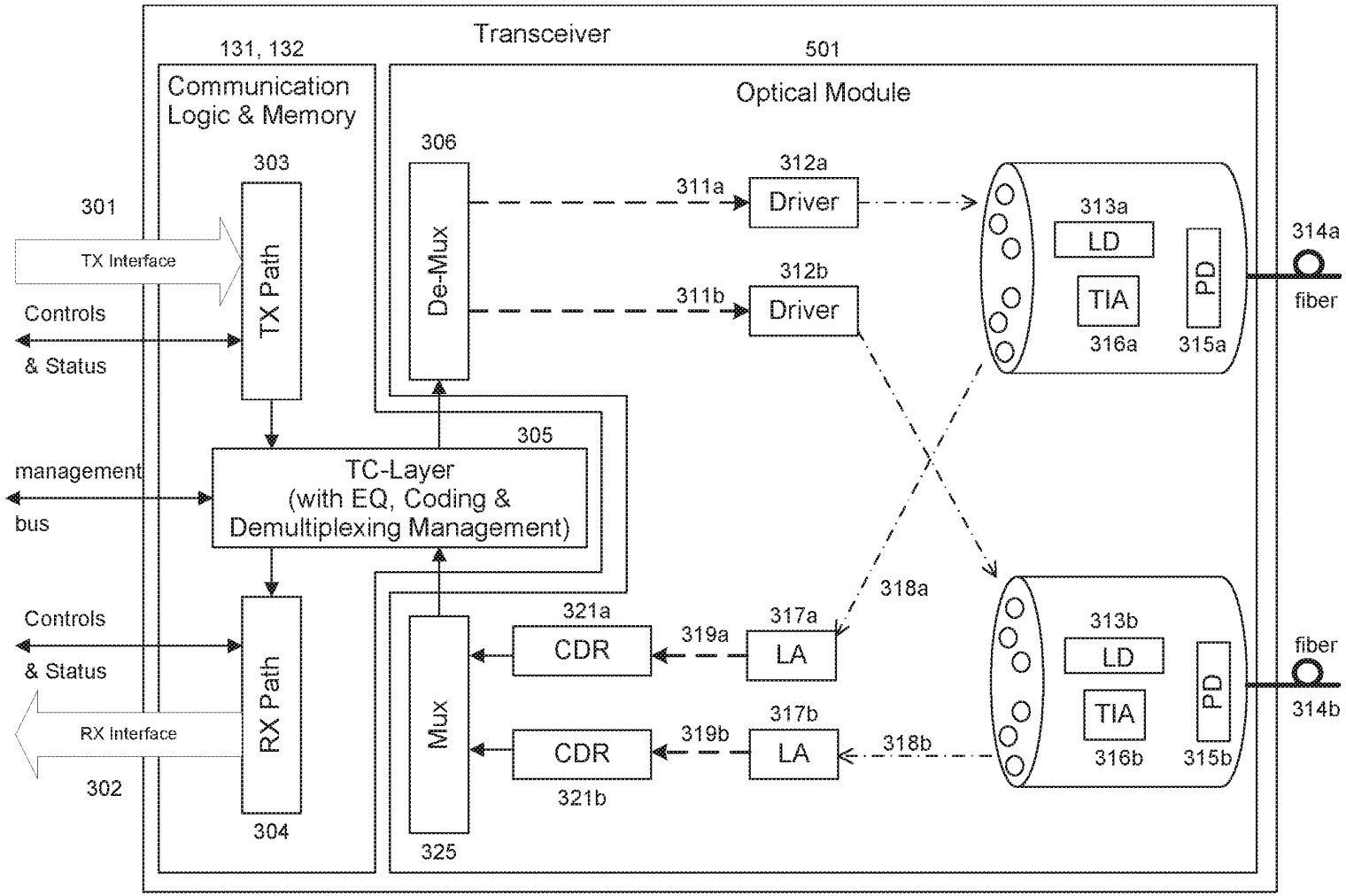
Transceiver
131, 132
Communication Logic & Memory
501
Optical Module
306
303
301
TX Interface
TX Path
De-Mux
311a
312a
Driver
313a
LD
TIA
PD
314a
fiber
Controls
& Status
311b
312b
Driver
316a
315a
305
management
bus
TC-Layer
(with EQ, Coding & Demultiplexing Management)
318a
321a
317a
Controls
& Status
CDR
319a
LA
313b
LD
TIA
PD
fiber
314b
RX Interface
RX Path
Mux
CDR
319b
317b
LA
318b
316b
315b
302
321b
304
325

FIG. 5

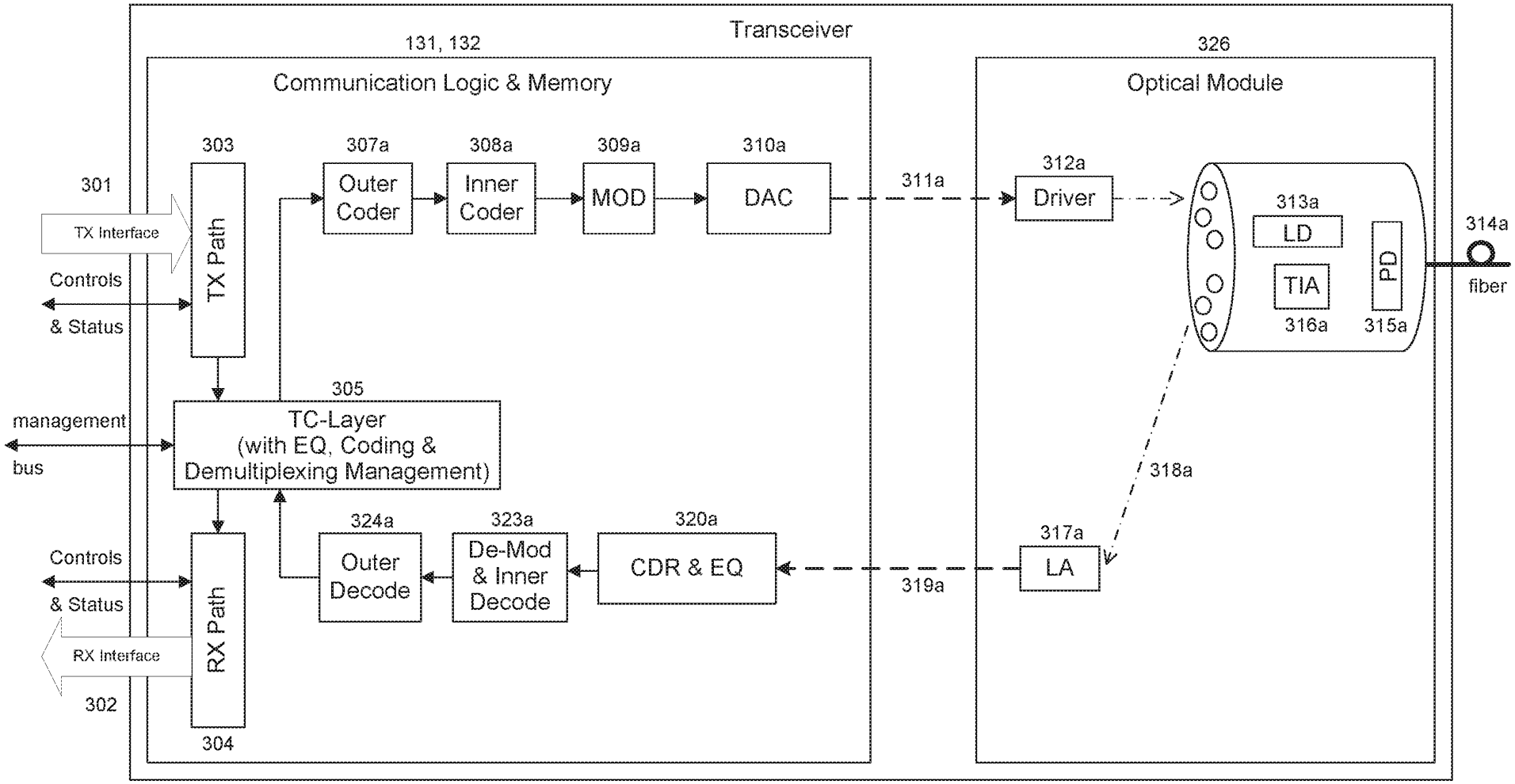
Transceiver
131, 132
Communication Logic & Memory
326
Optical Module
301
TX Interface
Controls
& Status
303
TX Path
307a
Outer Coder
308a
Inner Coder
309a
MOD
310a
DAC
311a
312a
Driver
313a
LD
TIA
316a
PD
315a
314a
fiber
management
bus
305
TC-Layer
(with EQ, Coding &
Demultiplexing Management)
318a
Controls
& Status
RX Interface
302
RX Path
304
324a
Outer Decode
323a
De-Mod
& Inner
Decode
320a
CDR & EQ
319a
317a
LA

FIG. 6A

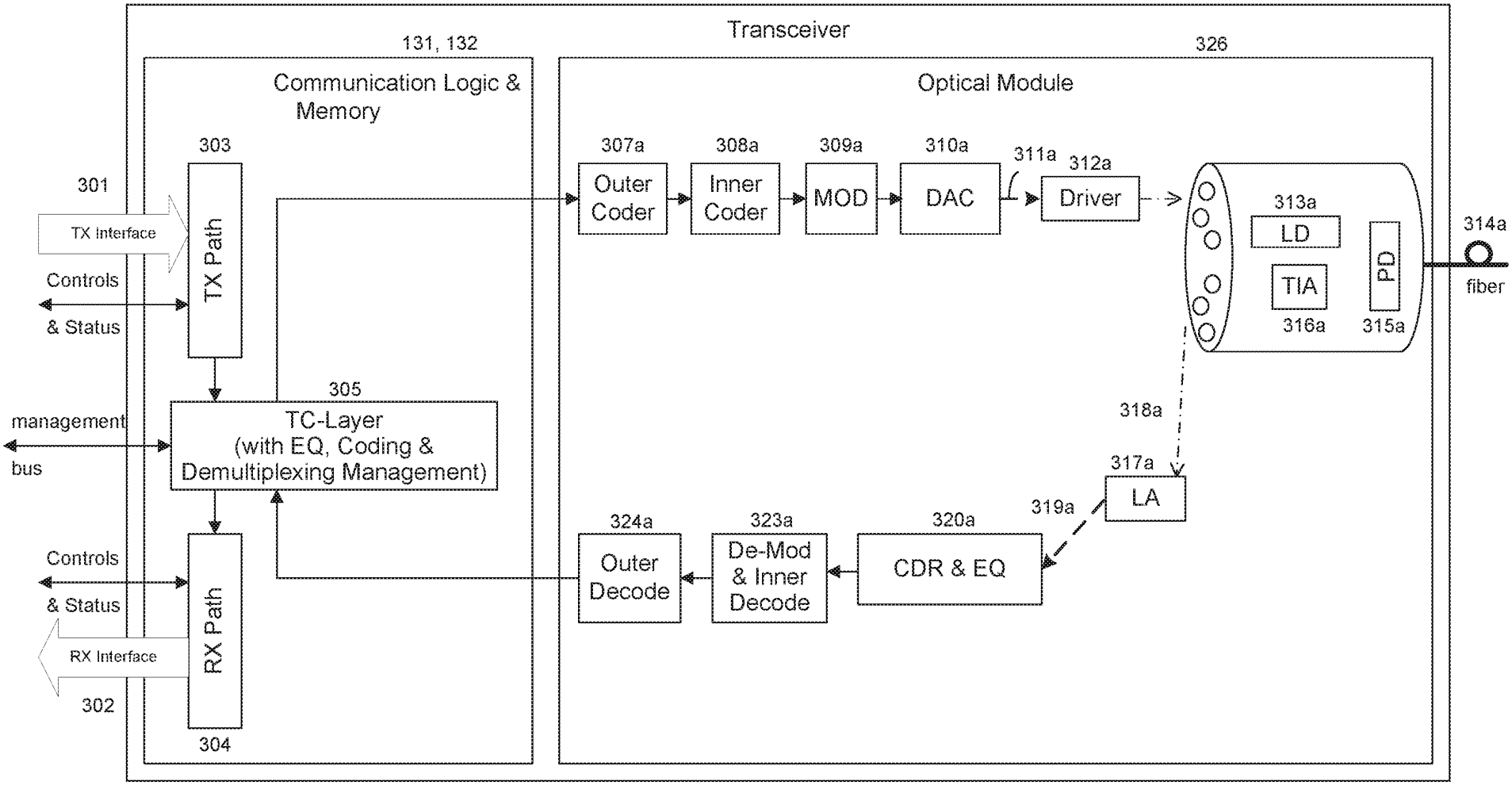
Transceiver
131, 132
326
Communication Logic & Memory
Optical Module
303
301
TX Interface
TX Path
Controls
& Status
305
management
bus
TC-Layer
(with EQ, Coding &
Demultiplexing Management)
Controls
& Status
RX Interface
302
RX Path
304
307a
Outer Coder
308a
Inner Coder
309a
MOD
310a
DAC
311a
312a
Driver
313a
LD
TIA
316a
PD
315a
314a
fiber
318a
317a
LA
319a
320a
CDR & EQ
323a
De-Mod & Inner Decode
324a
Outer Decode

FIG. 6B

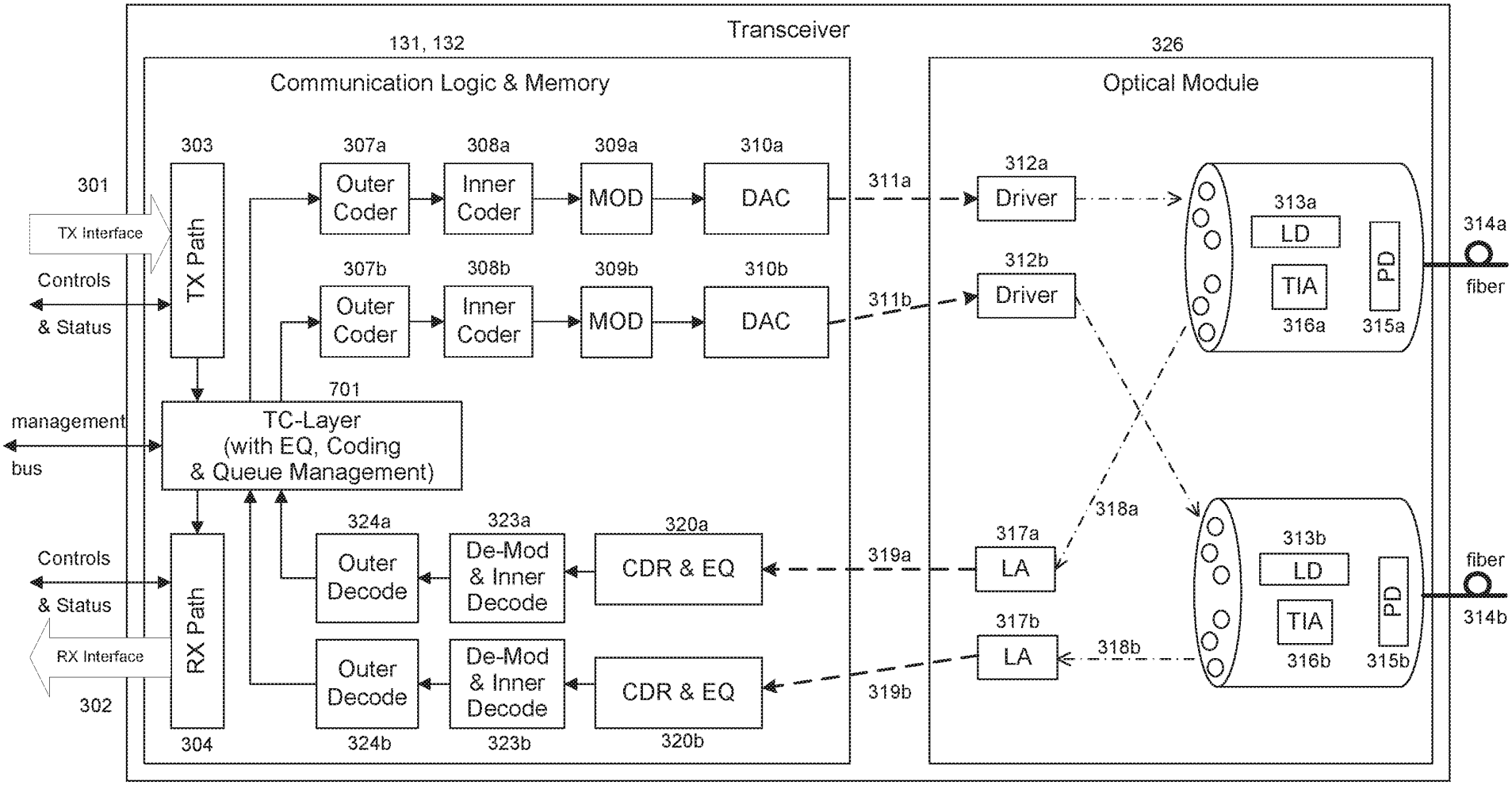
Transceiver
131, 132
Communication Logic & Memory
326
Optical Module
301
TX Interface
Controls
& Status
303
TX Path
307a
Outer Coder
308a
Inner Coder
309a
MOD
310a
DAC
307b
Outer Coder
308b
Inner Coder
309b
MOD
310b
DAC
311a
311b
312a
Driver
312b
Driver
313a
LD
TIA
316a
PD
315a
314a
fiber
701
management
bus
TC-Layer
(with EQ, Coding
& Queue Management)
318a
Controls
& Status
RX Interface
302
RX Path
304
324a
Outer Decode
323a
De-Mod
& Inner
Decode
320a
CDR & EQ
319a
317a
LA
313b
LD
TIA
316b
PD
315b
fiber
314b
317b
LA
318b
319b
Outer Decode
324b
De-Mod
& Inner
Decode
323b
CDR & EQ
320b

FIG. 7

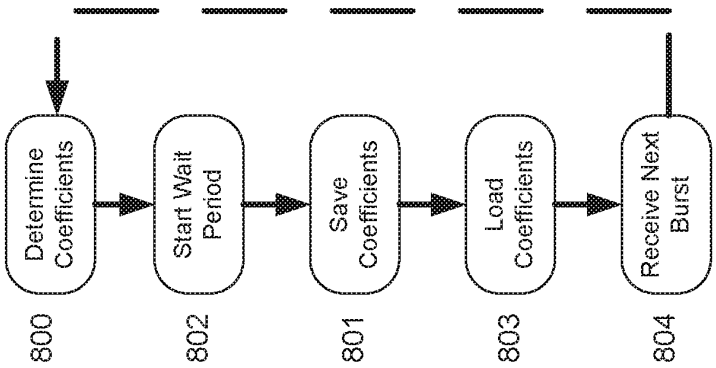
Determine Coefficients
800
Start Wait Period
802
Save Coefficients
801
Load Coefficients
803
Receive Next Burst
804

FIG. 8B

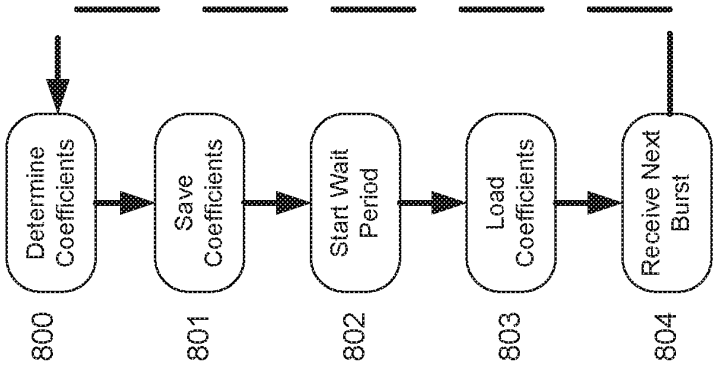
Determine Coefficients
800
Save Coefficients
801
Start Wait Period
802
Load Coefficients
803
Receive Next Burst
804

FIG. 8A

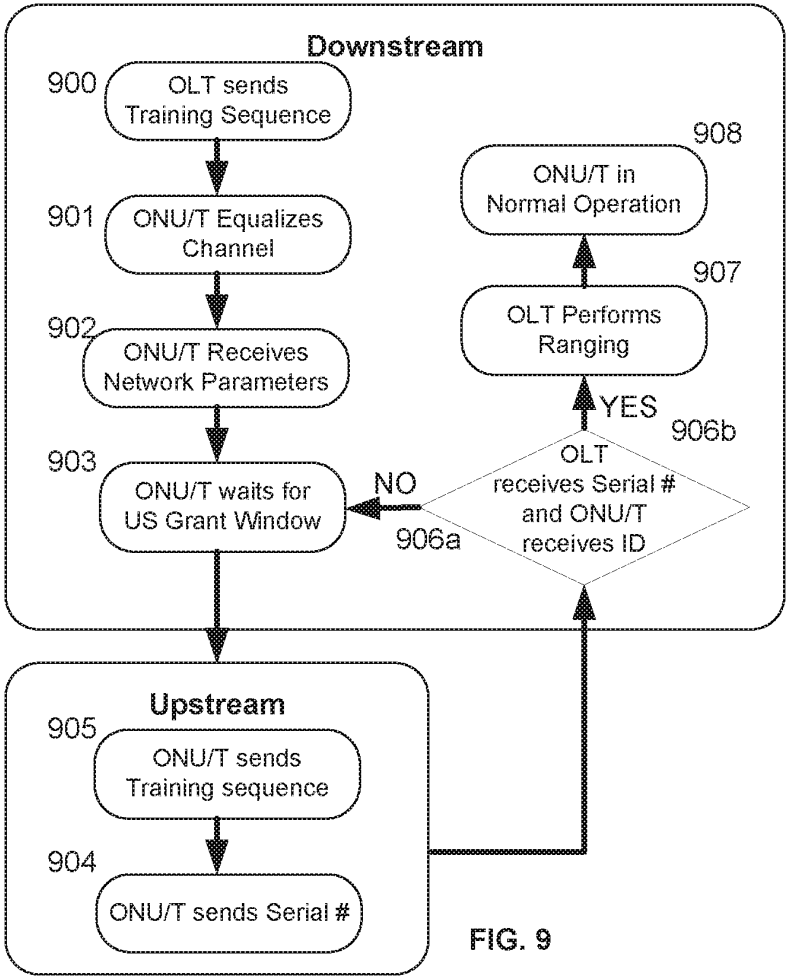
Downstream
900
OLT sends Training Sequence
901
ONU/T Equalizes Channel
902
ONU/T Receives Network Parameters
903
ONU/T waits for US Grant Window
NO
906a
OLT receives Serial # and ONU/T receives ID
YES
906b
907
OLT Performs Ranging
908
ONU/T in Normal Operation
Upstream
905
ONU/T sends Training sequence
904
ONU/T sends Serial #

FIG. 9

# Electronic Patent Application Fee Transmittal

| | |
|---|---|
| **Application Number:** | |
| **Filing Date:** | |
| **Title of Invention:** | SYSTEM AND METHOD FOR PERFORMING HIGH-SPEED COMMUNICATIONS OVER FIBER OPTICAL NETWORKS |
| **First Named Inventor/Applicant Name:** | Alexander Soto |
| **Filer:** | Alexander Ivan Soto |
| **Attorney Docket Number:** | UBI-002D |

Filed as Small Entity

**Filing Fees for Utility under 35 USC 111(a)**

| Description | Fee Code | Quantity | Amount | Sub-Total in USD($) |
|---|---|---|---|---|
| **Basic Filing:** | | | | |
| Utility filing Fee (Electronic filing) | 4011 | 1 | 70 | 70 |
| Utility Search Fee | 2111 | 1 | 300 | 300 |
| Utility Examination Fee | 2311 | 1 | 360 | 360 |
| **Pages:** | | | | |
| **Claims:** | | | | |
| **Miscellaneous-Filing:** | | | | |
| **Petition:** | | | | |
| **Patent-Appeals-and-Interference:** | | | | |

| Description | Fee Code | Quantity | Amount | Sub-Total in USD($) |
|---|---|---|---|---|
| **Post-Allowance-and-Post-Issuance:** | | | | |
| **Extension-of-Time:** | | | | |
| **Miscellaneous:** | | | | |
| | | **Total in USD ($)** | | **730** |

# Electronic Acknowledgement Receipt

| | |
|---|---|
| **EFS ID:** | 25446571 |
| **Application Number:** | 15095137 |
| **International Application Number:** | |
| **Confirmation Number:** | 5317 |
| **Title of Invention:** | SYSTEM AND METHOD FOR PERFORMING HIGH-SPEED COMMUNICATIONS OVER FIBER OPTICAL NETWORKS |
| **First Named Inventor/Applicant Name:** | Alexander Soto |
| **Customer Number:** | 93749 |
| **Filer:** | Alexander Ivan Soto |
| **Filer Authorized By:** | |
| **Attorney Docket Number:** | UBI-002D |
| **Receipt Date:** | 10-APR-2016 |
| **Filing Date:** | |
| **Time Stamp:** | 20:56:32 |
| **Application Type:** | Utility under 35 USC 111(a) |

## Payment information:

| | |
|---|---|
| Submitted with Payment | no |

## File Listing:

| Document Number | Document Description | File Name | File Size(Bytes)/ Message Digest | Multi Part /.zip | Pages (if appl.) |
|---|---|---|---|---|---|
| 1 | Specification | UBI-002D_specification.pdf | 170636<br>c7edef5d08fe99f9e7a0838640f5316d348c8f0d | no | 22 |

**Warnings:**

**Information:**

| | | | | | |
|---|---|---|---|---|---|
| 2 | Claims | UBI-002D_claims.pdf | 62349<br>d9a9b4c45847b0f37595e9668de3a197365367bd | no | 2 |
| **Warnings:** | | | | | |
| **Information:** | | | | | |
| 3 | Abstract | UBI-002D_abstract.pdf | 68166<br>382042ddcb33568d7f8efffc48f66acc5c06601b | no | 1 |
| **Warnings:** | | | | | |
| **Information:** | | | | | |
| 4 | Oath or Declaration filed | UBI-002D_declaration_alex.pdf | 181137<br>06c986a16d8e7953df0135682f23b7d42cdc410d | no | 2 |
| **Warnings:** | | | | | |
| **Information:** | | | | | |
| 5 | Oath or Declaration filed | UBI-002D_declaration_walt.pdf | 186656<br>1dc1c562931be0970641570375bf5c0a274d1f67 | no | 2 |
| **Warnings:** | | | | | |
| **Information:** | | | | | |
| 6 | Application Data Sheet | UBI-002D_ADS.pdf | 1823428<br>355e6313008c1ccfabf947656e51492ed0cc2093 | no | 9 |
| **Warnings:** | | | | | |
| **Information:** | | | | | |
| 7 | Drawings-only black and white line drawings | UBI-002D_drawings.pdf | 108646<br>cc1602853002e5c982bc803214241513b6204f3c | no | 9 |
| **Warnings:** | | | | | |
| **Information:** | | | | | |
| 8 | Fee Worksheet (SB06) | fee-info.pdf | 35047<br>f73d6e64d10600aad7f48cff0be6386393124c56 | no | 2 |
| **Warnings:** | | | | | |
| **Information:** | | | | | |
| | | | **Total Files Size (in bytes):** | 2636065 | |

**This Acknowledgement Receipt evidences receipt on the noted date by the USPTO of the indicated documents, characterized by the applicant, and including page counts, where applicable. It serves as evidence of receipt similar to a Post Card, as described in MPEP 503.**

**New Applications Under 35 U.S.C. 111**
**If a new application is being filed and the application includes the necessary components for a filing date (see 37 CFR 1.53(b)-(d) and MPEP 506), a Filing Receipt (37 CFR 1.54) will be issued in due course and the date shown on this Acknowledgement Receipt will establish the filing date of the application.**

**National Stage of an International Application under 35 U.S.C. 371**
**If a timely submission to enter the national stage of an international application is compliant with the conditions of 35 U.S.C. 371 and other applicable requirements a Form PCT/DO/EO/903 indicating acceptance of the application as a national stage submission under 35 U.S.C. 371 will be issued in addition to the Filing Receipt, in due course.**

**New International Application Filed with the USPTO as a Receiving Office**
**If a new international application is being filed and the international application includes the necessary components for an international filing date (see PCT Article 11 and MPEP 1810), a Notification of the International Application Number and of the International Filing Date (Form PCT/RO/105) will be issued in due course, subject to prescriptions concerning national security, and the date shown on this Acknowledgement Receipt will establish the international filing date of the application.**