UNITED STATES PATENT AND TRADEMARK OFFICE

BEFORE THE PATENT TRIAL AND APPEAL BOARD

NOKIA OF AMERICA CORPORATION,

Petitioner,

v.

ALEXANDER SOTO AND WALTER SOTO,

Patent Owners.

Case IPR2023-00681
U.S. Patent No. 10,263,723

PATENT OWNERS' REPLY TO PETITIONER'S REQUEST FOR REHEARING

TABLE OF CONTENTS

I. HISTORY OF THE INVENTION.....1

II. THE BREDE LINE CARD IN THE PROSECUTION HISTORY.....2

III. AGAZZI TEACHES HIGH PIN COUNT LINE CARDS LIKE BREDE..4

IV. ALLEGEDLY "MATERIAL" DIFFERENCES DO NOT MATTER.....5

A. THE AGAZZI REFERENCES STILL CANNOT COMBINE WITH WEI'S SFP.....5
B. PETITIONER VIOLATES ITS DUTY OF DISCLOSURE BY WITHHOLDING CONTRADICTORY EVIDENCE ABOUT THE IMPOSSIBLE COMBINATION.....6

V. THE ALLEGED "DIFFERENCES" ARE NOT RELEVANT 6

A. THE "INTEGRATED CIRCUIT" DISTINCTION OVER BREDE IS INSUFFICIENT AND "INTEGRATED CIRCUIT" TECHNOLOGY WAS ALREADY CONSIDERED 7
B. WEI DOES NOT CONTAIN RELEVANT DISCLOSURE MISSING FROM ARONSON 7

VI. THE BOARD PROPERLY ISSUED THE § 325(D) DENIAL 8

A. PETITIONER DOES NOT MEANINGFULLY ADDRESS THE CUMULATIVE NATURE OF ITS REFERENCES AND ARGUMENTS 9
B. THE BOARD DID NOT ERR BY ASSUMING PETITIONER'S ARGUMENTS WERE TRUE 9
C. THE BOARD CORRECTLY FOUND THE AGAZZI REFERENCES ARE CUMULATIVE10
D. THE BOARD PROPERLY FOUND WEI CUMULATIVE 13
E. PETITIONER'S CASES ARE INAPPLICABLE 13

VII. REVERSAL WOULD MAKE § 325(D) MEANINGLESS.....14

TABLE OF AUTHORITIES

CASES

Sling TV LLC v. Uniloc 2017 LLC,
IPR2019-01270, Paper 11 (PTAB Jan. 9, 2020).....13

Standard Mfg. Co. v. U.S.,
No. 641-85C, 1991 WL 286519 (Cl. Ct. Dec. 20, 1991).....12

Wolfspeed, Inc. f/k/a Cree, Inc. v. Trs. Of Purdue Univ.,
IPR2022-00761, Paper 13 (PTAB Mar. 30, 2023) 13

STATUTES

35 U.S.C. § 325(d).....1, 6, 12, 14

37 C.F.R. § 1.56 6

OTHER AUTHORITIES

MPEP 2100.....6

Patent Owners' Exhibit List

Exhibit	Description
2001	Public file history of application 11/772,187
2002	Public file history of application 12/512,968
2003	U.S. Pub. No. 2007/0031153 to Aronson et al.
2004	U.S. Pub. No. 2002/0181895 to Gilliland et al.
2005	U.S. Pub. No. 2001/0035997 to Agazzi ("Agazzi '997")
2006	Comparison of Excerpted Figures from Agazzi '997 (Ex. 2005) and Agazzi '341 (Ex. 1009)
2007	Email chain between Patent Owners' counsel and Petitioner's counsel regarding real party-in-interest discovery
2008	Reserved
2009	Public file history of Patent 10,771,181
2010	Chain of Emails Between Counsel for Nokia and Special Appearance Counsel for Patent Owners, Redacting the Username and Password, Exhibit from *Nokia of Am. Corp. v. Alexander Soto and Walter Soto*, IPR2023-00960.
2011	Chain of emails between Infinera's counsel and Patent Owners' counsel regarding discovery, Exhibit from *Infinera Corp. v. Alexander Soto and Walter Soto*, IPR2023-00834.

Director Vidal,

Section 325(d) permits the Director to "take into account whether, and reject the petition or request because, the same of substantially the same prior art or arguments previously were presented to the Office." This case exemplifies such a situation where the Examiner already addressed the Petitioner's arguments. Combinations of a first reference allegedly teaching all the electro-optical components (in a device far too big, hot, and power-hungry) with a second reference that describes a "pluggable" form factor were impossible. Paper 6 ("POPR") at 29–52; Paper 10 ("Denial") at 13–17, 20–23. All the Petition did was to assert the same argument using cumulative references. *See* Paper 1 ("Petition").

The Board's Section 325(d) denial of institution should stand. The distinctions over prior art identified in the Request for Review either do not exist or do not matter.

I. HISTORY OF THE INVENTION

The Soto brothers invented the pluggable optical transceiver with complex, m-ary signal processing capabilities in 2003. The Wei reference, the referenced used by petitioner to meet the pluggable limitation, discloses a small form pluggable ("SFP") that lacks m-ary signal processing capabilities. Ex. 1006 at 2:2–4. The SFP module has 20 pins (2 pairs or 4 total for data) and receives only 1W of power for each of the transmitter and receiver. Ex. 1014 at 10, 21, 22. Wei's two printed circuit boards have less than about 13mm x 35mm for chips and electrical components:

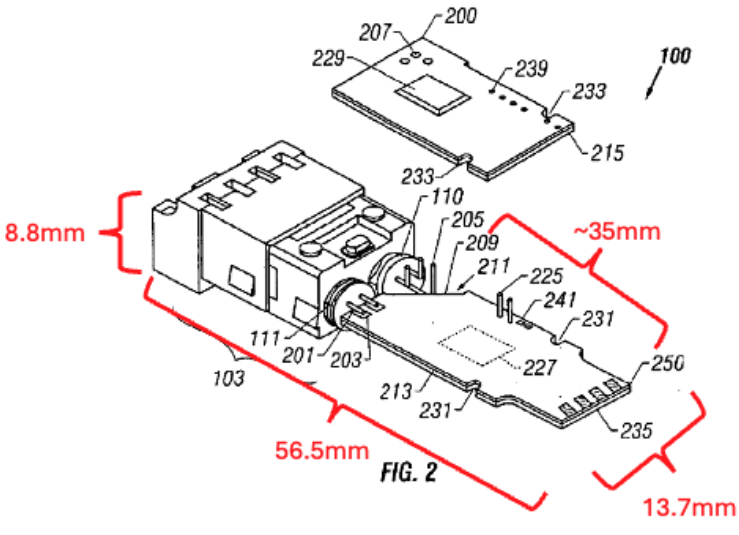

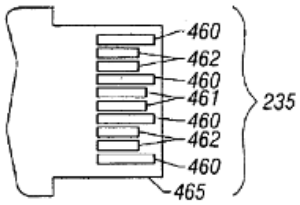

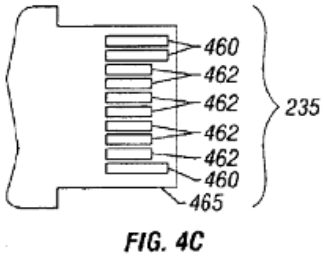

Fig. 2 (annotated with sizes), 4B, 4C; Ex. 1014 at 6–7 (providing dimensions).

To make a complex m-ary processing system work in a small, low-powered, thermally limited pluggable module, the challenged patent discloses an embodiment that 1) integrates both digital and analog components in a CMOS chip; 2) uses one or two transmit and receive paths; and 3) operates at slower speeds such as 155 Mbit/s. Ex. 1001 at Figs. 3–4 (showing 2 paths), Figs. 6A–6B (showing one path).

> The invention involves a complex design of digital, analog and optical components . . . . The PMA/PCS device would be a mixture of digital and analog that with current technology can be manufactured in the same process in CMOS. . . . An example of a preferred exemplary embodiment of the invention would have[] transmission rates from 155 Mbits/sec . . . . two transmit and receive paths . . . but a single or plurality of transmit and receive paths are possible.

Id. at 1:8–22 (incorporating provisional app. 60/480,488 at [0014]).

II. THE BREDE LINE CARD IN THE PROSECUTION HISTORY

To achieve competitive throughput speeds, prior art used big, rack-mounted

line cards that supported many big, fast, hot components that used lots of power. *See* Paper 11 at 4 (discussing "rack-mounted" OLTs). Line card components were too big, too hot, and too power-hungry to use in pluggable form factors.

The Examiner repeatedly issued rejections citing line cards references like Brede for electrical signal processing components in combination with another reference cited for a pluggable module. POPR at 29–32 (summarizing prosecution); Denial at 13–17, 20–22. In response, the inventors submitted evidence showing the relative sizes of line cards and SFP modules, explaining that such combinations were impossible. Ex. 1024 at 80 (submitting evidence of sizes via IDS), 69–71 (arguing impossibility). For example, Brede's system had two "64-pin AMP Champ connectors," each of which measured 98.43 mm x 15.62 mm x 12.12mm, and "just one male 64 pin AMP champ connector is larger than an SFP or XFP let alone accounting for incorporation of the entirety of Brede's Fig. 3." Ex. 1024 at 70. Given the impossibility of this type of combination, the Examiner withdrew the objection. *Id.* at 60–61; Paper 11 at 4–5; POPR at 31–32. Petitioner has no evidence showing that this decision by the Examiner was error; 64 pin line cards remain incompatible with 4 data pin SFPs. Pages 2-9 to 2-11 of the "ADC Telecommunications" from Ex. 1024 at 80 show line cards in a 23-inch rack receiving 181W of power:

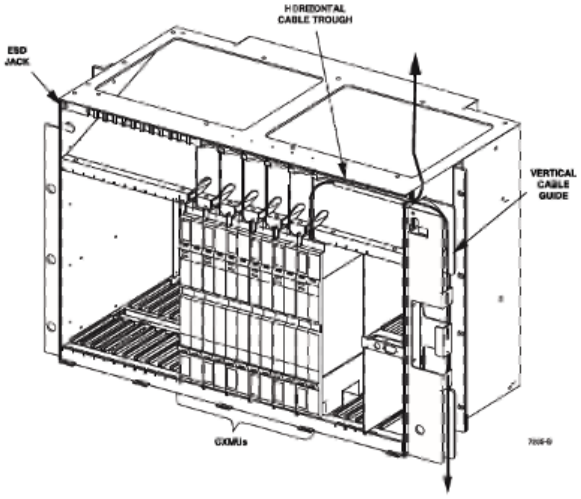

Table 2-2. HDT Specifications

CHARACTERISTIC	SPECIFICATION
–48 VDC Power Consumption (Watts)	
Fans	11.5 W
DNIU	7.2 W active/6.9 W standby
PSTU	2 W
CTSU	5 W active/3.9 W standby
CXMU	12.1 W active/9.2 W standby
SCNU	9.6 W active/6.9 W standby
PWRU	10.6 W (load shared)
Total	181.3 W
Dimensions and Weight	
Height	13.95 in (35.4 cm)
Width	21.40 in (54.36 cm)
Depth	12.0 in (30.48 cm)
Weight	57 lbs (25.85 kg)
Mounting	
Rack size	23-inch
Extension from rack	5 inches (12.6 cm)

III. AGAZZI TEACHES HIGH PIN COUNT LINE CARDS LIKE BREDE

The Agazzi ’640 and Agazzi ’341 references teach line card technology similar to the Brede line card. The Agazzi references teach 16 parallel, big, hot, and power-hungry paths for achieving commercially competitive 10 Gbit/s speeds.

The line card in Agazzi ’640 relies on the 64-bit input interface and the 64-bit output interface (128 I/O pins total). Petition at 15–16 (highlighting entire 64-bit interfaces). These 64-bit data interfaces support 16 parallel, “multi-carrier” signal processing paths to achieve fast, 10 Gbit/s throughput speeds. *Id.* at 18, 25 (relying on all 16 parallel paths); Ex. 1005 at 1:15–17, 2:26–27, 2:32–33, 8:32–44, 11:36–60, 15:27–28, 15:56–65. This 10 Gbit/s, 16-path, 128-pin system is at least 16 times bigger, power-hungrier, and hotter than the embodiment in the challenged patent. Agazzi ’640 would not fit in an SFP interface with only 4 data pins, nor operate with just 2W of power. Instead, Agazzi ’640’s 16-path system is intended for a line card, which had more room, power, and cooling (like Brede’s system in a 23-inch rack

with two, 64 pin connectors and 181W of power).

Agazzi ’341 similarly teaches 16 parallel paths to achieve high data transfer rates. Ex. 1009 at 1:55–63, 2:9–10, 2:21–23, 3:63–4:27, 4:50–57, 5:45–51, 6:33–39, 6:50–51, Fig. 5 (showing 16 parallel ADCs and 16 parallel equalizers). The transmitter system interface receives input 32 signals, and the same is inferred for the output interface, for 64 total in/out signals. *Id.* at 5:5–8. The 16-path, 64-signal interface system of Agazzi ’341 is also intended for use on big line cards with lots of room, power, and cooling, not in pluggable modules.

Petitioner argues that Agazzi’s large, hot and power-hungry line cards (instead of Brede) can somehow be shrunk into an SFP that lacks the size, cooling, power, or compatible pin count. Thus, Petitioner repeats the same argument considered during prosecution. Ex. 1024 at 60–61, 70–71; Paper 11 at 4–5; POPR at 31–32.

IV. ALLEGEDLY “MATERIAL” DIFFERENCES DO NOT MATTER

A. The Agazzi References Still Cannot Combine with Wei’s SFP

The alleged “differences” in the Request for Rehearing do not overcome the fundamental incompatibilities between big, hot, power hungry, 64-pin line cards and tiny 20-pin pluggable modules. Indeed, “just one male 64 pin AMP champ connector is larger than an SFP or XFP let alone accounting for incorporation of the entirety of” the line card components. Ex. 1024 at 70.

The 64 or 128-pin interfaces in the Agazzi reference cannot work with Wei’s

4 data pin SFP module for the same reasons the Examiner already considered. Nothing in the Petition or Request for Rehearing addresses the impossibility of combining large, hot 64- or 128-pin line cards into a 4-pin SFP pluggable. At best, the "new" distinction presented by Petitioner—"where the transmitter and receiver are on an integrated circuit" (Paper 11 at 1)—achieves some size benefits that are undone by implementing 16 parallel paths, and ultimately does nothing to address the problems presented by pin counts, size, heat, or power. This fundamental incompatibility remains; there was no error. The § 325(d) denial should be sustained.

B. Petitioner Violates its Duty of Disclosure by Withholding Contradictory Evidence About the Impossible Combination

Contrary to MPEP 2100 and 37 C.F.R. § 1.56, Nokia again withholds a report from its same expert, Dr. Prucnal, arguing that even ***one*** m-ary signal processing path was not enabled in a pluggable module for being too big and too hot. *See* POPR at 57–59; Paper 9 at 2–5 (previously withholding real party-in-interest). These problems are 16 times worse for the 16 parallel path systems of Agazzi '640 and Agazzi '341! Petitioner cannot credibly argue that the inventors' 1-path embodiment was not enabled while the Agazzi 16-path embodiments are possible and obvious.

V. THE ALLEGED "DIFFERENCES" ARE NOT RELEVANT

The Request for Rehearing fails to accurately identify any "material differences" over previously considered prior art. As discussed above, for the purposes of this analysis, the Agazzi reference and Brede are similar and suffer from

the same problems when proposing to make them "pluggable."

A. The "integrated circuit" distinction over Brede is insufficient and "integrated circuit" technology was already considered

The Request for Rehearing argues that the Agazzi references teach "the transmitter and receiver are on an integrated circuit." Paper 11 at 1. But, as explained above, this alone does not resolve the main problems with the Agazzi reference line cards, including interface size, heat, and power needs. Merely using an "integrated circuit" is not materially different than the line card disclosed in Brede.

Nor was the disclosure of an "integrated circuit" new. The Examiner explicitly considered Aronson and its disclosure of integrated circuit technology. POPR at 40, 44–46, 48 (citing Ex. 2003); Denial at 21 (agreeing with patent owner). Thus, even to the extent the use of an "integrated circuit" is relevant, it was also considered and rejected in the prosecution history.

B. Wei does not contain relevant disclosure missing from Aronson

Petitioner suggests that Aronson does not teach "how to actually package the transceiver components within a small form factor pluggable module," a deficiency supposedly taught by Wei. Paper 11 at 3, 9, 14–15. This is not accurate. Wei does not teach packaging techniques that would resolve the size, heat and power issues considered by the Examiner and raised in the Petition.

According to Petitioner, Wei teaches to vertically stack two PCBs, allowing one to fit "a GBIC within an LC or other small form factor package." Paper 11 at 3.

GBIC refers to a pluggable form factor about twice the length of an SFP. Halving and stacking GBIC internal parts would make them fit into an SFP package. The Agazzi references do not, however, teach GBIC-sized (or smaller) systems. Wei's halve-and-stack technique cannot be used with the Agazzi references. Thus, neither Wei nor Aronson teach "how to actually package" something as big as Brede or Agazzi into an SFP.

In terms of packaging, Wei and Aronson both teach the same thing: small pluggables can package basic (binary, not m-ary) signal processing chips. *E.g.*, POPR at 45–46, 50–51 (explaining where Aronson teaches an IC in a pluggable); Ex. 1006 at Fig. 3 (showing a basic signal processor (e.g., IC 229 on PCB 200 and IC 227 on PCB 235). The Agazzi ICs, with their 16 parallel paths, would be about 16 times bigger than even the inventors' one path IC that petitioner's expert does not believe would have fit in an SFP. The Request for Rehearing fails to address this.

VI. THE BOARD PROPERLY ISSUED THE § 325(D) DENIAL

The Board did not overlook any material differences, make any factual errors, or neglect Petitioner's arguments. The Petition was denied because it repeats previously rejected arguments based on cumulative art and fails to identify any material errors with the Examiner's previous findings. Paper 10 at 25.

A. Petitioner does not meaningfully address the cumulative nature of its references and arguments

Petitioner failed to address the fundamental incompatibilities between big, hot, power-hungry line card technology like Brede or Agazzi, and tiny, low powered pluggables like SFP modules like in Aronson and Wei. After the inventors submitted evidence to argue that such combinations were impossible, the Examiner withdrew a rejection using arguments like what Petitioner does now. Ex. 1024 at 80 (submitting evidence of SFP sizes via IDS), 69–71 (arguing impossibility). Petitioner does not identify any error in the Examiner's findings or demonstrate how its references are materially different than those considered by the Examiner. As demonstrated above, the material features of Petitioner's references are the same as those considered by Examiner.

The alleged "new" disclosure—use of integrated circuit technology—was known to the Examiner, and regardless, does not alone solve the size, heat, and power issues. Rather, Petitioner worsens the impossibility by relying on references that have 16 parallel paths, multiplying the difficulty by 16. The Petition did not set forth a theory of how integrated circuits make Agazzi's 64- or 128-pins compatible with 20 pins of an SFP. The Board simply had no on-point arguments to address.

B. The Board did not err by assuming Petitioner's arguments were true

The Board did not deny institution "***solely because*** they cover the same limitations as prior combinations" as argued by Petitioner. Paper 11 at 8 (emphasis

added). Rather, the Board assumed that Petitioner's arguments about teaching claim elements was accurate: that the Agazzi references taught the claimed electrical signal processing components, and Wei taught the claimed pluggable form factor. Paper 10 at 21. The Board denied institution *despite* assuming that Petitioner's argument were true because the Petitioner failed to show how its arguments and references were not cumulative of those already considered and rejected by the Examiner and because the Petitioner failed to identify any errors. *Id.* at 25.

C. The Board correctly found the Agazzi references are cumulative

The Agazzi references have no material differences over other line card references such as Brede as shown above. Petitioner focuses its arguments on Agazzi '341. *See* Paper 11 at 10-13.

First, Petitioner argues that the Examiner did not have a "reference that disclosed an optical transceiver module with optoelectronics on an integrated circuit during prosecution." Paper 11 at 11. Not true. The Examiner explicitly considered Aronson during prosecution, and Aronson teaches this allegedly missing aspect. Paper 6 at 45–46, 51–52 (citing Ex. 2003).

Petitioner is also wrong that the "cited Agazzi ['997, Ex. 2005] does not disclose an optical transceiver module with integrated optoelectronics." Paper 11 at 11. Cited Agazzi '997 (Ex. 2005) at [0039] discloses that "technology such as CMOS . . . may be used to implement the electronic circuitry . . . . using CMOS, a

greater level of integration is possible." Paper 6 at 50; Paper 10 at 22; Ex. 2006 (generally). Agazzi '997 does in fact disclose an optical transceiver module with integrated optoelectronics.

Nor does Agazzi '341 show, in Figure 22, a transmitter and receiver packaged on the same integrated circuit as argued by Petitioner. Paper 11 at 12. Instead, further annotated Figure 22 of Agazzi '341 shows that parts of the transmitter and receiver—the DACs, ADCs, and optoelectronics—are **not** part of the "integrated circuit":

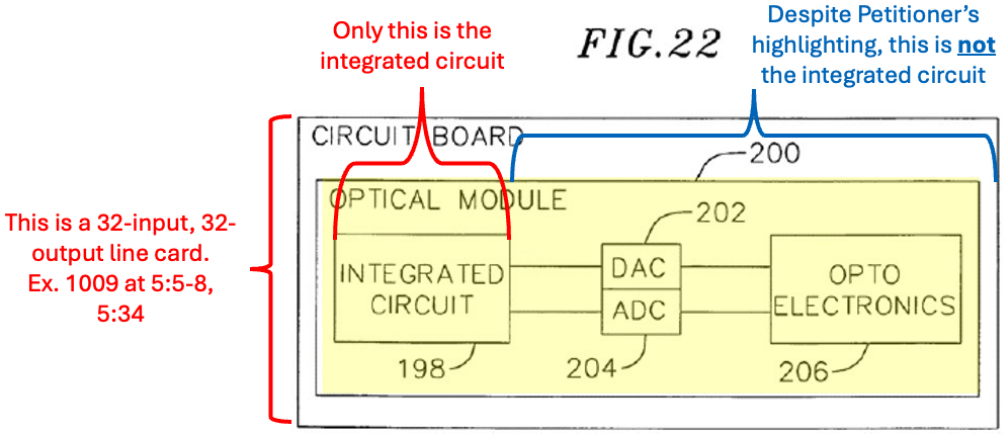

And, even if Petitioner were correct, it is not material because Agazzi '341 does not teach an integrated circuit that fits in a *pluggable* module.

The Request for Review also contains the new argument that Agazzi '341 and "cited Agazzi" '997 are different because the claims are different, and Agazzi '997 lacks Figure 22. Paper 11 at 11-12. This argument is untimely and irrelevant. The Petition did not rely on the claims or Figure 22 of Agazzi '341.

Petitioner incorrectly argues that Examiner Bello should have listed Agazzi '997. Paper 11 at 12. MPEP 609.02 makes clear that Examiners review all

prior art from parent applications, and an applicant has no duty to re-submit the same, previously considered art unless the applicant wishes for such art to be explicitly listed on the cover of an issued patent. Each of the challenged patents issued after this section of the MPEP went into effect. Petitioner has no evidence the Examiner did not do his job. *Standard Mfg. Co. v. U.S.*, No. 641-85C, 1991 WL 286519 (Cl. Ct. Dec. 20, 1991) (examiners are presumed to do their job).

Petitioner argues that Agazzi ’341 was never used in a rejection with Wei, but this is not required under § 325(d). Paper 11 at 13. As described above, the disclosure of Agazzi ’341-Wei is substantially the same as Brede-Aronson, or any of the other big line card plus small pluggable combinations considered by the Examiner and Board. The language of Section § 325(d) looks *not only to identical* art and arguments, but also to “substantially the same” prior art and arguments.

The Board did not fail to address any “material differences” between the references and the previously considered prior art. Paper 11 at 9. This is not true, as shown the Denial at 19–23. The fact that the Board disagreed with Petitioner does not mean the Board did not address Petitioner’s arguments. And, for the reasons in Section V above, none of the alleged “material differences” are accurate.

Petitioner has not established that either Agazzi reference is not cumulative.

D. The Board properly found Wei cumulative

For the reasons in Section IV(A) and V(D) above, Wei is cumulative of the previously considered references about pluggable modules. The halve-and-stack technique from Wei cannot make Agazzi's big, hot and power hungry line cards fit because Agazzi does not teach GBIC-sized systems, so it does not matter. The integrated circuit aspect of Wei is cumulative of Aronson and does not somehow make the incompatible 64- or 128-pins of Agazzi compatible with 20 pin SFPs.

E. Petitioner's cases are inapplicable

The Board's decision does not violate *Wolfspeed, Inc. f/k/a Cree, Inc. v. Trs. Of Purdue Univ.*, IPR2022-00761, Paper 13 (PTAB Mar. 30, 2023) (neither precedential nor informative). In that decision, the Board improperly denied institution because the relied-upon references (Depetro and Choy) were materially different from the previous references because they did not suffer the same relevant deficiencies as the previously-considered references. *Id.* at 4–8. For the reasons in Sections III to V above, Petitioner has not identified any material differences that now make its proposed combination possible.

The Board's decision also does not contradict *Sling TV LLC v. Uniloc 2017 LLC*, IPR2019-01270, Paper 11 (PTAB Jan. 9, 2020) (neither precedential nor informative). Unlike in *Sling TV*, Petitioner's references and arguments here are cumulative of Examiner findings, not just cumulative of previous institution denials.

The Board found Petitioner's art and arguments cumulative of Aronson and Brede, which were considered during prosecution. Denial at 7–12, 21–23, 25.

VII. REVERSAL WOULD MAKE § 325(D) MEANINGLESS

The Director should not disturb the Board's decision. Petitioner effectively argues that 35 U.S.C. § 325(d) only applies where the exact arguments and prior art were addressed by an examiner. But this is not what § 325(d) says. Rather, § 325(d) expressly applies to reference and arguments that are *substantially similar* to those already addressed. There will always be patents or publications with similar disclosures to those addressed in the examination. A petitioner should not be permitted to collaterally attack the examiner's original finding simply by making the argument to a different body within the USPTO without showing error. Otherwise, examination becomes moot and advisory. This disincentivize examiners from proper examination. IPR petitions should be used to make new arguments to the PTAB, not relitigate error-free decisions already made by the USPTO.

Respectfully submitted,

Dated: February 2, 2024

/ Qi Tong /
Qi Tong (Reg. No. 74,292)
RUSS AUGUST & KABAT
4925 Greenville Avenue, Suite 200
Dallas, TX 75206
(310) 826-7474

Attorney for Patent Owners

CERTIFICATE OF COMPLIANCE WITH TYPE-VOLUME LIMITS

This Patent Owners' Reply to Petitioner's Request for Rehearing is 15 pages or less, excluding table of contents, table of authorities, certificate of service, signature block, this certificate, or table, which is in compliance with the Director's approval on January 19, 2024. Paper 13.

Dated: February 2, 2024

/ Qi Tong /

Qi Tong (Reg. No. 74,292)
RUSS AUGUST & KABAT
4925 Greenville Avenue, Suite 200
Dallas, TX 75206
(310) 826-7474

Attorney for Patent Owners

CERTIFICATE OF SERVICE (37 C.F.R. § 42.6(e)(1))

The undersigned hereby certifies that the above document was served on February 2, 2024, by filing this document through the P-TACTS system as well as delivering a copy via electronic mail upon the following attorneys of record for the Petitioner:

M. Scott Stevens (Reg. No. 54,762)
scott.stevens@alston.com
Karlee N. Wroblewski (Reg. 76,805)
karlee.wroblewski@alston.com
Matthew M. Welch (Reg. No. 75,429)
matt.welch@alston.com

Dated: February 2, 2024

/ Qi Tong /
Qi Tong (Reg. No. 74,292)
RUSS AUGUST & KABAT
4925 Greenville Avenue, Suite 200
Dallas, TX 75206
(310) 826-7474

Attorney for Patent Owners