US007933341B2

(12) **United States Patent**
Agazzi et al.

(10) **Patent No.: US 7,933,341 B2**
(45) **Date of Patent: *Apr. 26, 2011**

(54) **SYSTEM AND METHOD FOR HIGH SPEED COMMUNICATIONS USING DIGITAL SIGNAL PROCESSING**

(75) Inventors: **Oscar E. Agazzi**, Irvine, CA (US); **Gottfried Ungerboeck**, Irvine, CA (US); **Keshab K. Parhi**, Mission Viejo, CA (US); **Christian A. Lutkemeyer**, Irvine, CA (US); **Pieter Vorenkamp**, Aliso Viejo, CA (US); **Kevin T. Chan**, Pasadena, CA (US); **Myles H. Wakayama**, Laguna Niguel, CA (US)

(73) Assignee: **Broadcom Corporation**

(*) Notice: Subject to any disclaimer, the term of this patent is extended or adjusted under 35 U.S.C. 154(b) by 1260 days.

This patent is subject to a terminal disclaimer.

(21) Appl. No.: **09/797,428**

(22) Filed: **Feb. 28, 2001**

(65) **Prior Publication Data**

US 2001/0035994 A1 Nov. 1, 2001

Related U.S. Application Data

(63) Continuation-in-part of application No. 09/765,014, filed on Jan. 17, 2001.

(60) Provisional application No. 60/185,538, filed on Feb. 28, 2000.

(51) **Int. Cl.**
H04L 25/02 (2006.01)

(52) **U.S. Cl.** **375/260**; 375/229

(58) **Field of Classification Search** 398/202, 398/135, 139, 140, 141, 164; 375/229, 260, 375/265, 296, 358, 233; 341/141
See application file for complete search history.

(56) **References Cited**

U.S. PATENT DOCUMENTS

4,438,491	A	*	3/1984	Constant	710/106
4,995,057	A	*	2/1991	Chung	375/231
5,444,721	A	*	8/1995	Okanoue et al.	714/794
5,526,154	A	*	6/1996	Pyhalammi	398/72
5,537,113	A	*	7/1996	Kawabata	341/141
5,568,142	A	*	10/1996	Velazquez et al.	341/126
5,852,477	A	*	12/1998	Limberg	348/725
6,088,404	A	*	7/2000	Jekal	375/341

(Continued)

FOREIGN PATENT DOCUMENTS

EP 0 506 094 A2 9/1992

(Continued)

OTHER PUBLICATIONS

Black, Jr., W.C. and D.A. Hodges. "Time interleaved converter arrays." IEEE Journal of Solid-State Circuits. vol. 15, No. 6, Dec. 1980 : 1022-1029.*

(Continued)

Primary Examiner — Leslie Pascal
(74) *Attorney, Agent, or Firm* — McAndrews, Held & Malloy, Ltd.

(57) **ABSTRACT**

Various systems and methods related to equalization precoding in a communications channel are disclosed. In one implementation preceding is performed on signals transmitted over an optical channel. In one implementation preceding and decoding operations are performed in parallel to facilitate high speed processing in relatively low cost circuits. Initialization of the precoders may be realized by transmitting information related to the characteristics of the channel between transceiver pairs.

6 Claims, 19 Drawing Sheets

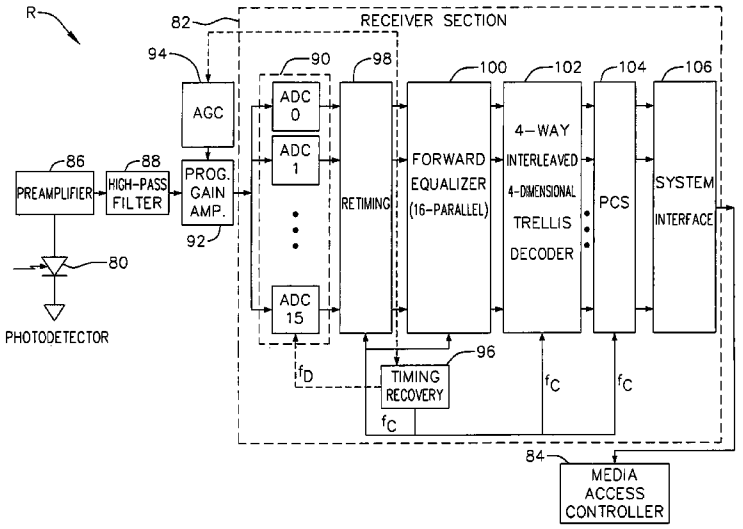

Nokia of America Corporation
IPR2023-00682, Ex. 1009
Ex. 1009.1

U.S. PATENT DOCUMENTS

6,177,893	B1 *	1/2001	Velazquez et al.	341/118
6,353,629	B1 *	3/2002	Pal	375/222
7,127,007	B2 *	10/2006	Agazzi	375/316
2001/0035997	A1 *	11/2001	Agazzi	359/173
2003/0020644	A1 *	1/2003	Yeap et al.	341/144
2005/0133600	A1 *	6/2005	Lucera et al.	235/462.25

FOREIGN PATENT DOCUMENTS

EP	1006697	A3 *	1/2004
JP	06104858	*	4/1994
JP	11186993	*	7/1999
WO	WO 98/39871		9/1998

OTHER PUBLICATIONS

Fischer, R.F.H. et al. "Dynamics limited precoding, shaping, and blind equalization for fast digital transmission over twisted pair lines." IEEE Journal on Selected Areas in Communications, vol. 13, No. 9, Dec. 1995: 1622-1633.*

U, S. et al. "Spectra analysis of nonuniformly holding signals for time-interleaved systems with timing mismatches." Proceedings of the 20th IEEE Instrumentation and Measurement Technology Conference, 2003. IMTC '03. May 20-22, 2003: 1298-1301 vol. 2.*

Uyematsu, T. et al. "Trellis coded modulation for multilevel photon communication system." Singapore ICCS/ISITA '92. 'Communications on the Move'. Nov. 16-20, 1992: 582-587, vol. 2.*

Lee, L.H. Charles. Convolutional Coding: Fundamentals and Applications. Boston, Massachusetts: Artech House, Inc., 1997.*

Schlegl, Christian. Trellis Coding. New York, New York: The Insititute of Electrical and Electronics Engineers, Inc., 1997.*

Ungerboeck, G. "Channel coding with multilevel/phase signals." IEEE Transactions on Information Theory, vol. 28, No. 1. Jan. 1982: 55-67.*

Fried, D.L. and J.B. Seidman. "Heterodyne and photon-counting receivers for optical communications." Applied Optics, vol. 6, No. 2. Feb. 1967: 245-250.*

Weik, Martin H. "channel", "intensity modulation", "modulate". Fiber Optics Standard Dictionary, 3rd ed. 1997.*

Azadet, K. et al. "Equalization and FEC techniques for optical transceivers." IEEE Journal of Solid-State Circuits, vol. 37, No. 3, Mar. 2002: 317-327.*

Fettweis, G. and H. Meyr. "Parallel Viterbi algorithm implementation: breaking the ACS-bottleneck." IEEE Transactions on Communications, vol. 37, No. 8, Aug. 1989: 785-790.*

Fettweis, G. and H. Meyr. "High-speed parallel Viterbi decoding: algorithm and VLSI-architecture." IEEE Communications Magazine, vol. 29, No. 5, May 1991: 46-55.*

Weik, Martin H. "interleaving". Fiber Optics Standard Dictionary. 3rd ed. 1997.*

Kang, et al., "Highly Parallel Pulsed Optoelectronic Analog-Digital Converter," *IEEE Photonics Technology Letters*, 10(11):1626-1628 (Nov. 1998).

S. Walklin and J. Conradi, "Multilevel Signaling for Increasing the Reach of 10Gb/s Lightwave Systems," Journal of Lightwave Technology, vol. 17, No. 11, Nov. 1999, pp. 2235-2248.

M. Guizani and A.R. Al-Ali, "PC-Compatible Optical Data Acquisition Unit," 1994 Instrumentation and Measurement Technology Conference, May 10-12, 1994.

N. Kanno and K. Ito, "Fiber-Optic Subcarrier Multiplexing video Transport Employing Multilevel QAM," IEEE Journal on Selected Areas in Communications, vol. 8, No. 7, Sep. 1990.

W. Ellersick, C.K. Yang, M. Horowitz, and W. Dally, "GAD: A 12GS/s CMOS 4-bit A/D Converter for an Equalized Multi-Level Link," 1999 Symposium on VLSI Circuits.

W.J. Dally and J. Poulton, "Transmitter Equalization for 4Gb/s Signalling," Proceedings of Hot Interconnects IV, Palo Alto, 1996.

J.H. Winters, R.D. Gitlin, and S. Kasturia, "Reducing the Effects of Transmission Impairments in Digital Fiber Optic Systems," IEEE Communications Magazine, Jun. 1993, pp. 68-76.

S. Kasturia and J.H. Winters, "Techniques for High-Speed Implementation of Nonlinear Cancellation," IEEE Journal on Selected Areas in Communications, vol. 9, No. 5, Jun. 1991.

B.L. Kasper, "Equalization of Multimode Optical Fiber Systems," Bell System Technical Journal, vol. 61, No. 7, Sep. 1982, pp. 1367.

J.H. Winters and R.D. Gitlin, "Electrical Signal Processing Techniques in Long-Haul Fiber-Optic Systems," IEEE Transactions on Communications, vol. 38, No. 9, Sep. 1990, pp. 1439-1453.

R. Mason and J.T. Taylor, "High-Speed Electro-Optic Analogue to Digital Converters," 1993 International Symposium on Circuits and Systems, May 3-6, 1993.

T.E. Darcie, "Subcarrier Multiplexing for Lightwave Networks and Video Distribution Systems," IEEE Journal on Selected Areas in Communications, vol. 8, No. 7, Sep. 1990.

J.A.C. Bingham, Multicarrier Modulation for Data Transmission: An Idea Whose time Has Come, IEEE Communications Magazine, May 1990, pp. 5-14.

R. Olshansky, V.A. Lanzisera, P.M. Hill, "Subcarrier Multiplexed Lightwave Systems for Broadband Distribution," Journal of Lightwave Technology, vol. 7, No. 9, Sep. 1989.

* cited by examiner

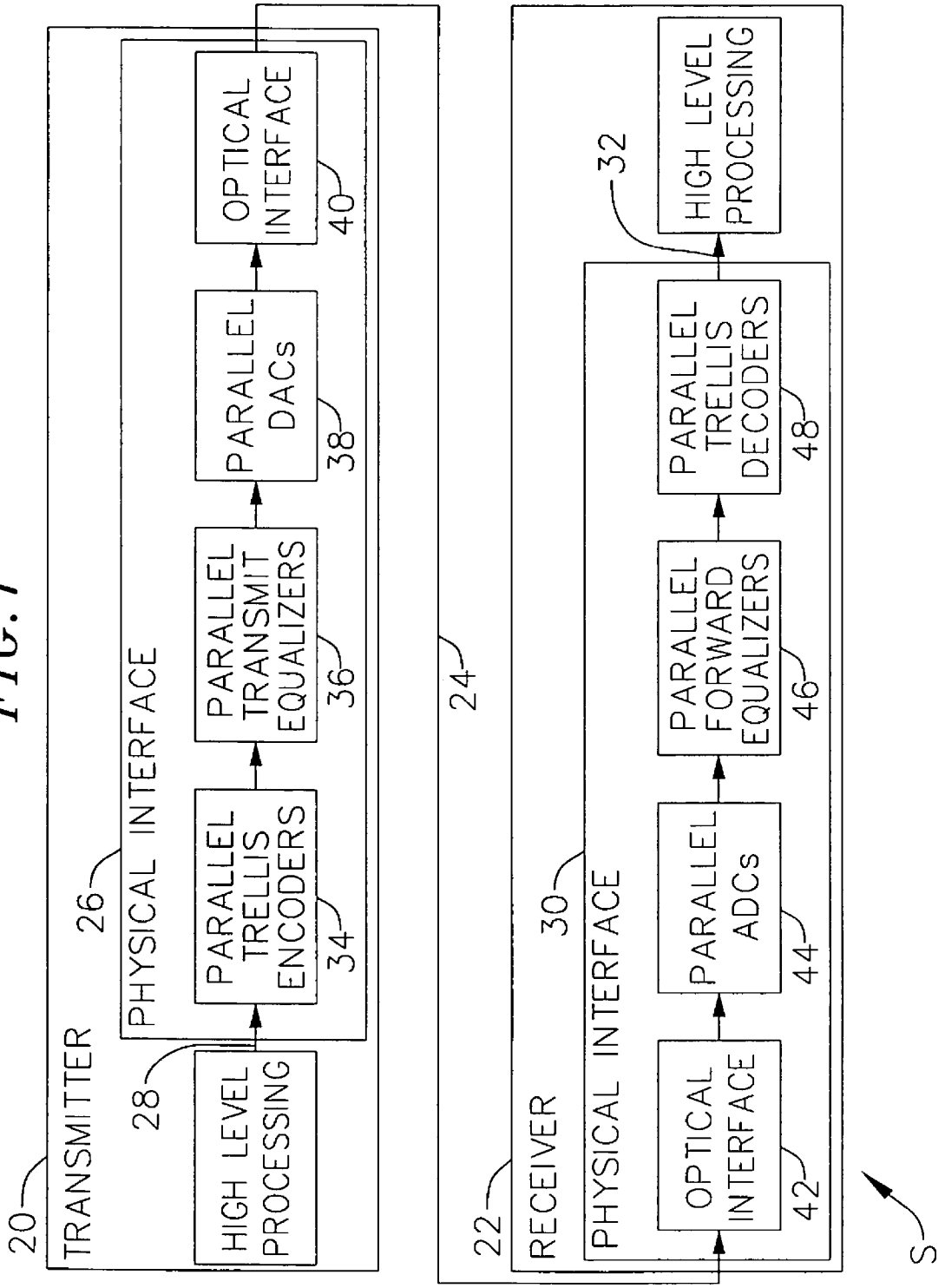
TRANSMITTER
20
PHYSICAL INTERFACE
26
HIGH LEVEL PROCESSING
28
PARALLEL TRELLIS ENCODERS
34
PARALLEL TRANSMIT EQUALIZERS
36
PARALLEL DACs
38
OPTICAL INTERFACE
40
24
RECEIVER
22
PHYSICAL INTERFACE
30
OPTICAL INTERFACE
42
PARALLEL ADCs
44
PARALLEL FORWARD EQUALIZERS
46
PARALLEL TRELLIS DECODERS
48
32
HIGH LEVEL PROCESSING
S

FIG. 1

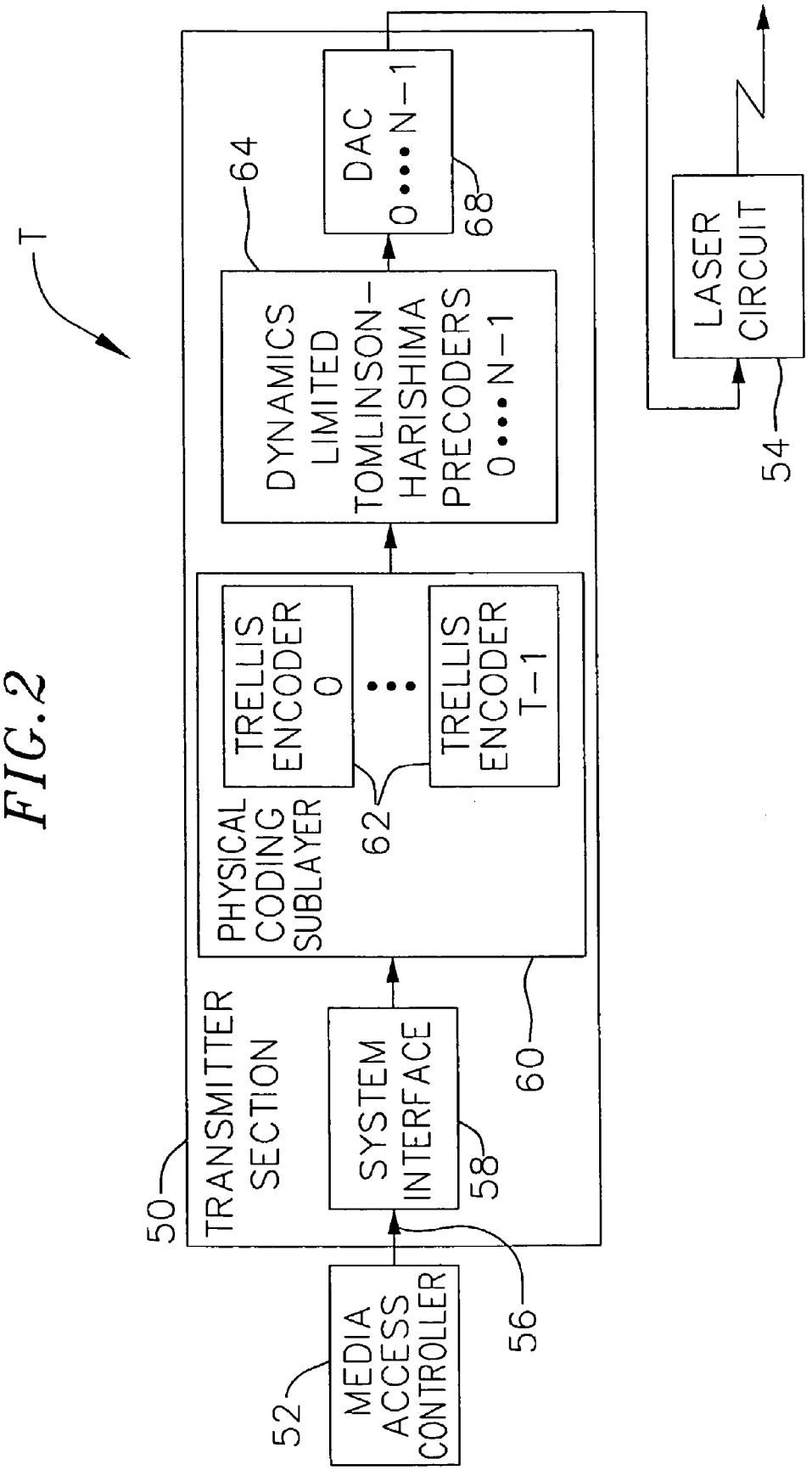
T
TRANSMITTER SECTION
50
MEDIA ACCESS CONTROLLER
52
56
SYSTEM INTERFACE
58
60
PHYSICAL CODING SUBLAYER
62
TRELLIS ENCODER 0
TRELLIS ENCODER T−1
DYNAMICS LIMITED TOMLINSON−HARISHIMA PRECODERS 0•••N−1
64
DAC 0•••N−1
68
LASER CIRCUIT
54

FIG. 2

FIG. 3

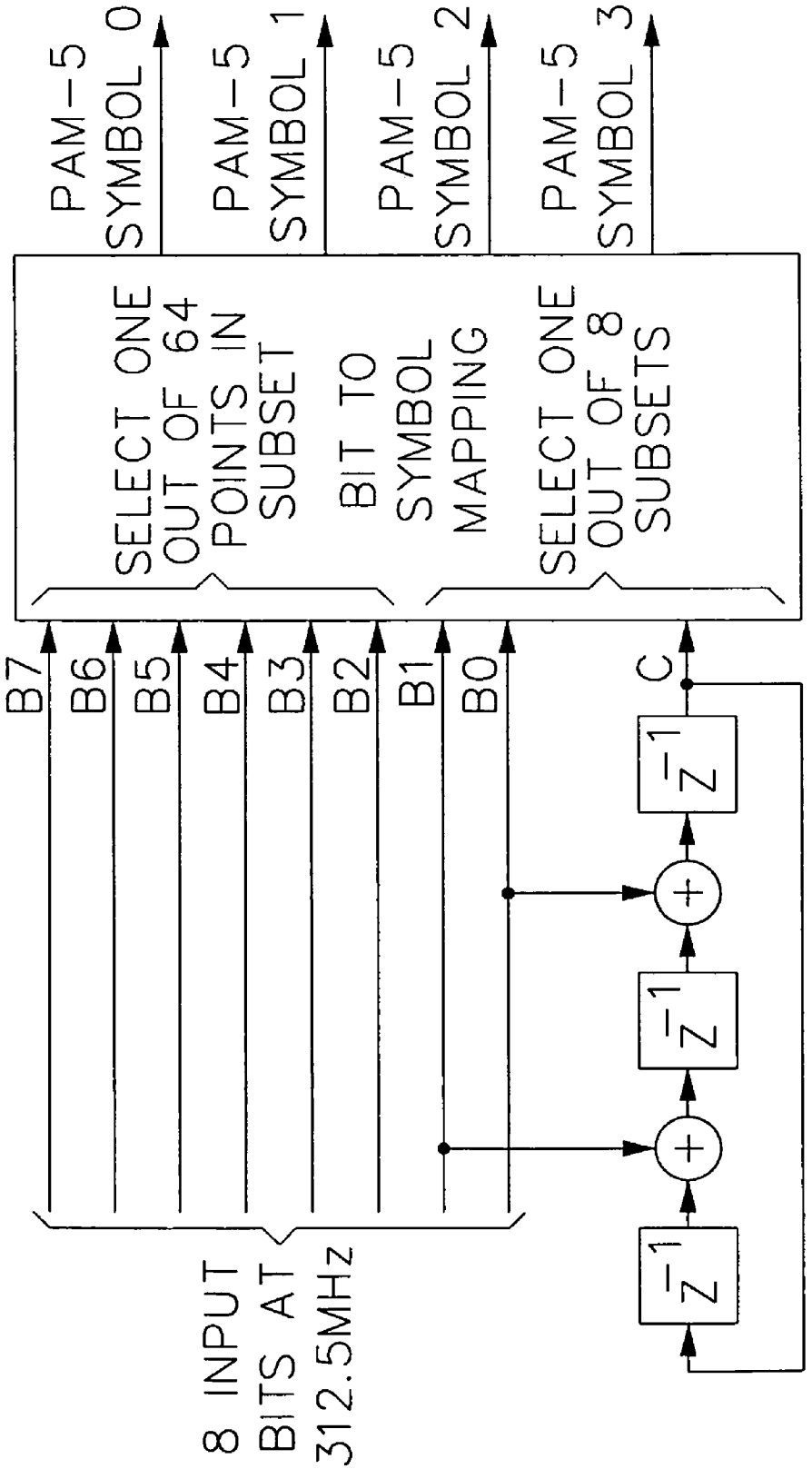
PAM-5 SYMBOL 0
PAM-5 SYMBOL 1
PAM-5 SYMBOL 2
PAM-5 SYMBOL 3
SELECT ONE OUT OF 64 POINTS IN SUBSET
BIT TO SYMBOL MAPPING
SELECT ONE OUT OF 8 SUBSETS
B7
B6
B5
B4
B3
B2
B1
B0
C
8 INPUT BITS AT 312.5MHz

FIG. 4

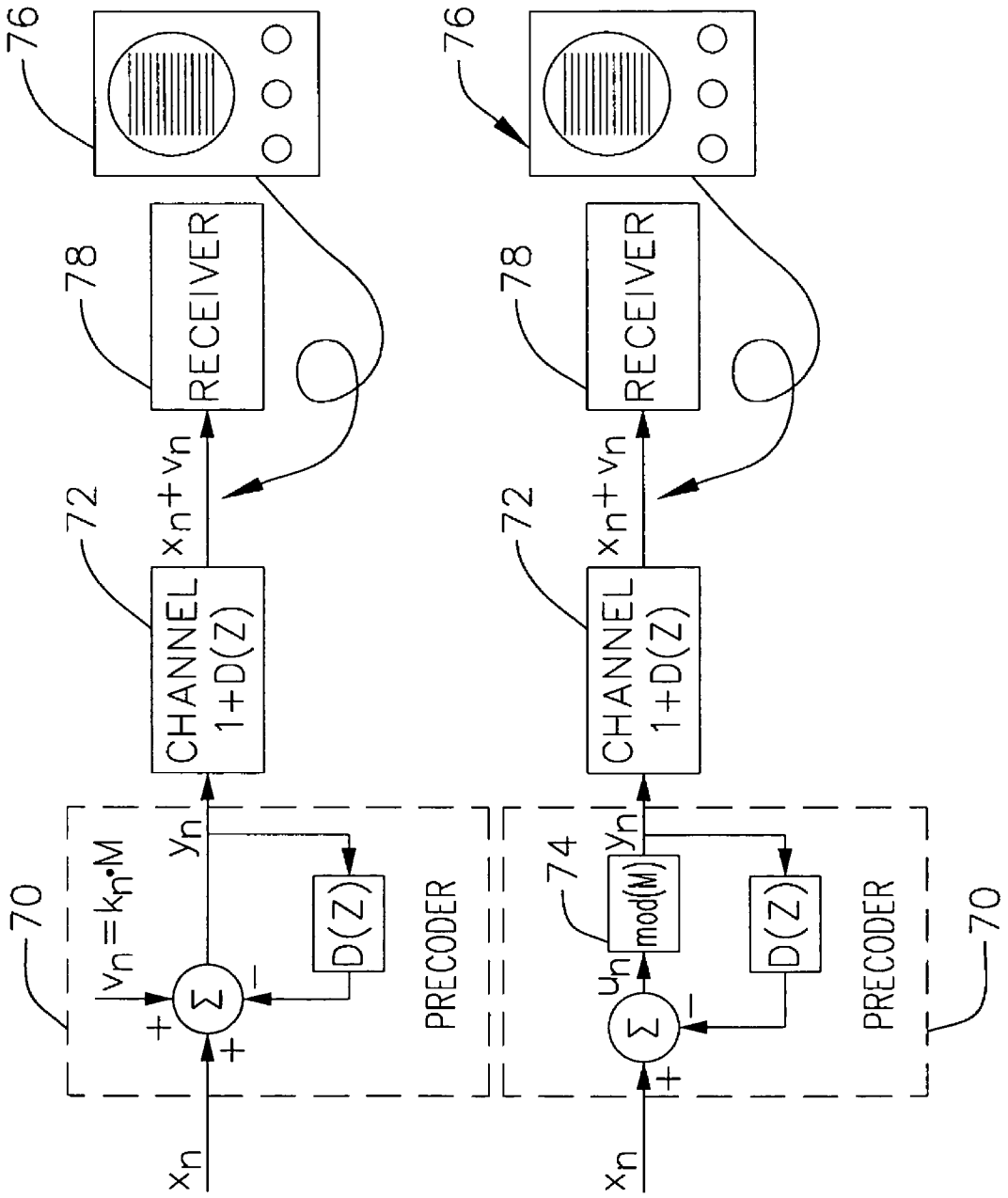
70
$v_n = k_n \cdot M$
x_n
y_n
D(Z)
PRECODER
72
CHANNEL
1+D(Z)
$x_n + v_n$
78
RECEIVER
76
74
mod(M)
u_n

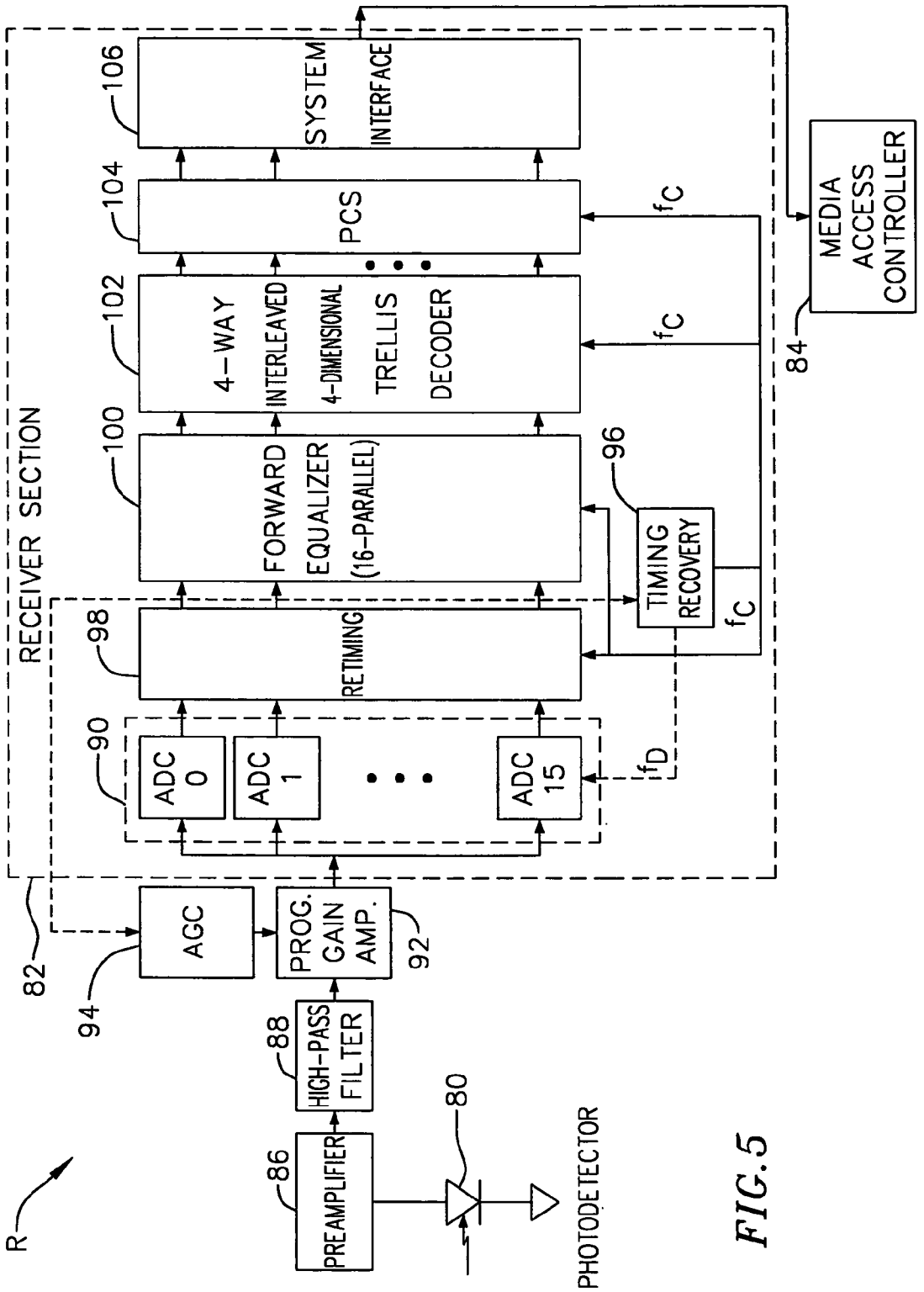
RECEIVER SECTION
106
SYSTEM INTERFACE
104
PCS
102
4-WAY INTERLEAVED 4-DIMENSIONAL TRELLIS DECODER
100
FORWARD EQUALIZER (16-PARALLEL)
98
RETIMING
90
ADC 0
ADC 1
ADC 15
96
TIMING RECOVERY
f_C
f_D
MEDIA ACCESS CONTROLLER
84
82
94
AGC
PROG. GAIN AMP.
92
88
HIGH-PASS FILTER
86
PREAMPLIFIER
80
PHOTODETECTOR
R

FIG. 5

FIG. 6

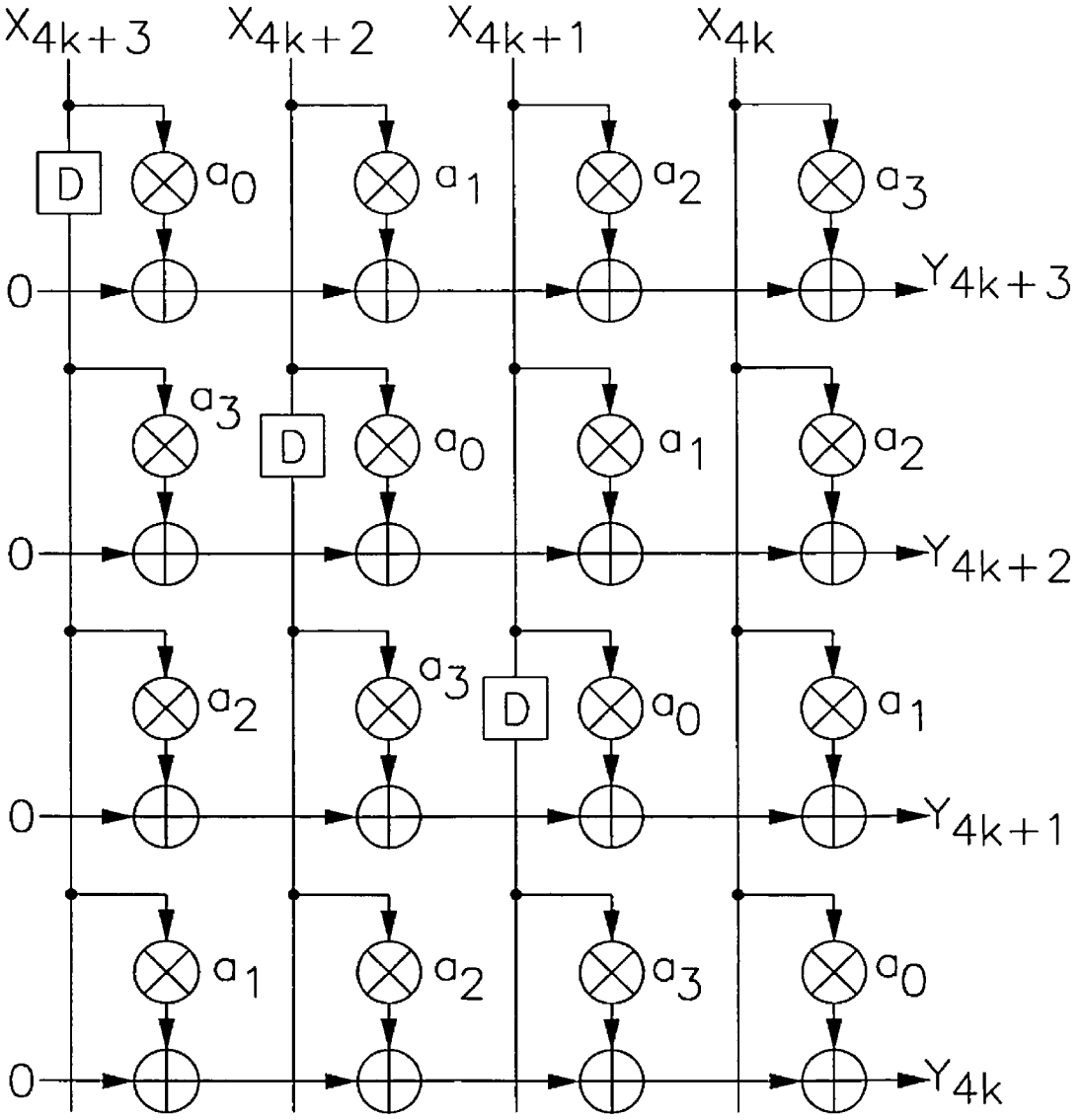

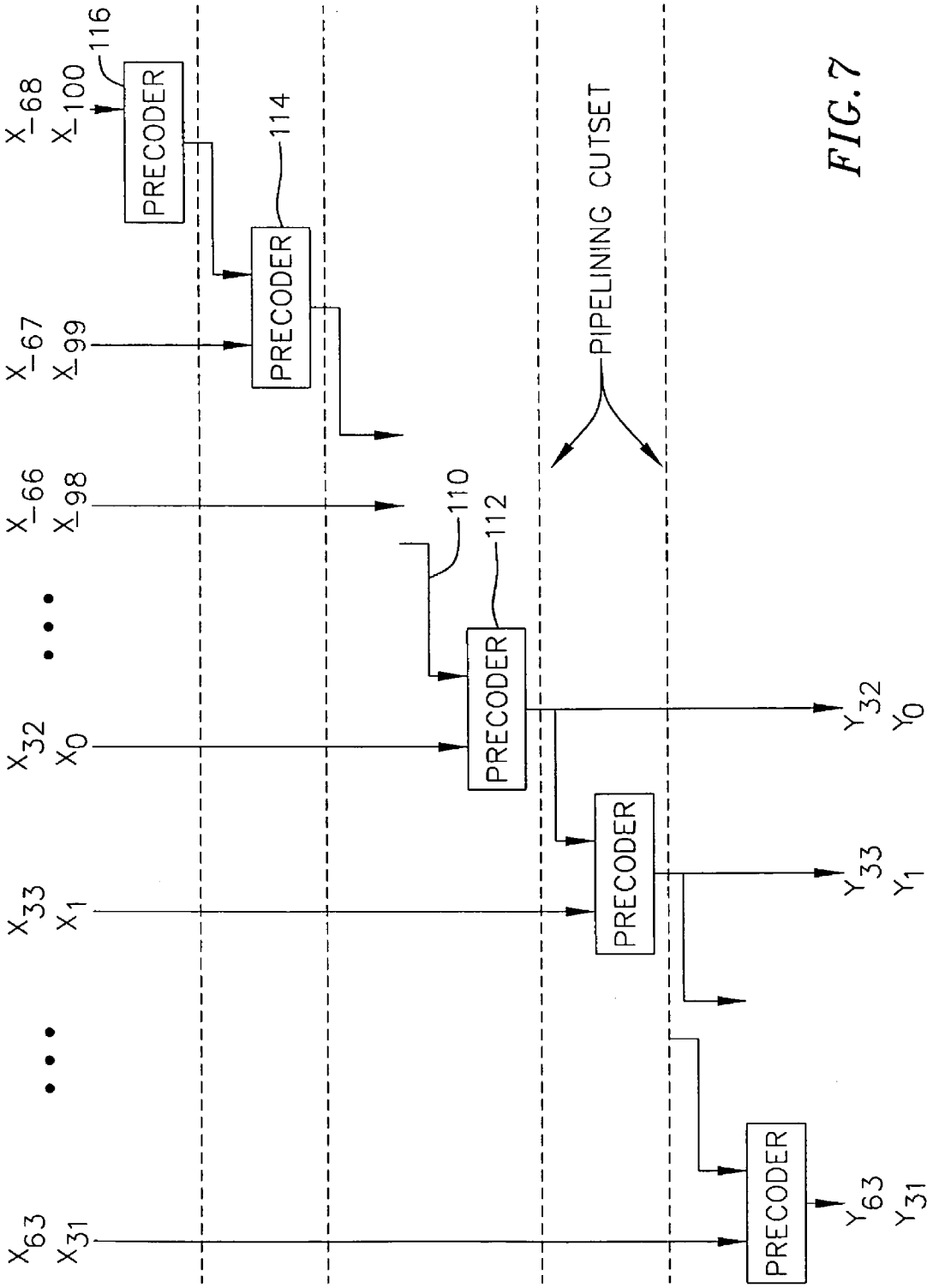
X_68
X_100
116
PRECODER
X_67
X_99
114
PRECODER
X_66
X_98
110
112
PRECODER
X32
X0
X33
X1
PRECODER
X63
X31
PRECODER
PIPELINING CUTSET
Y32
Y0
Y33
Y1
Y63
Y31

FIG. 7

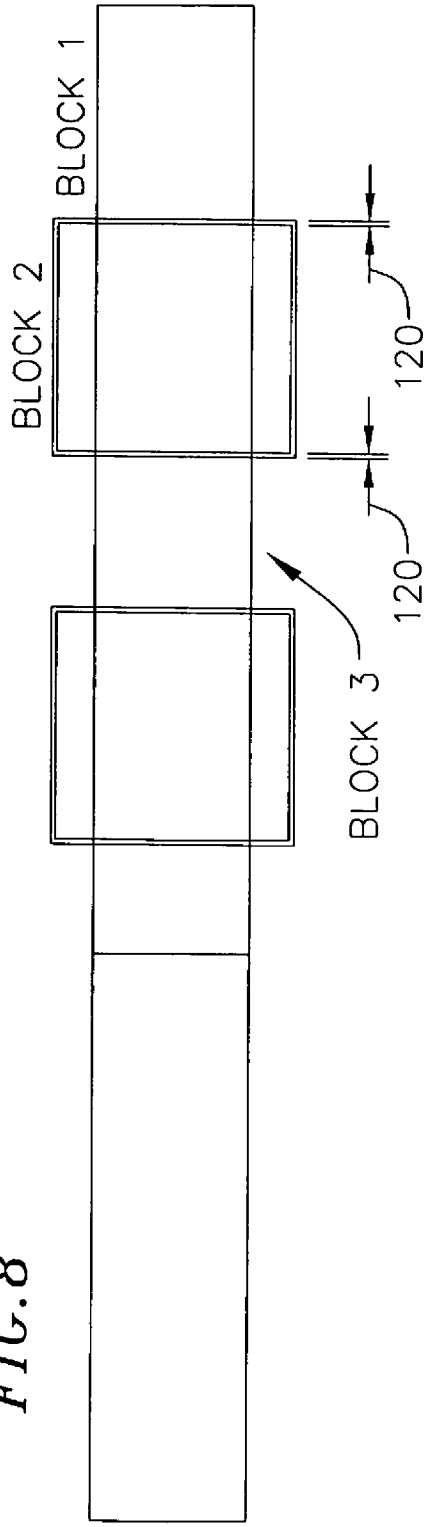
BLOCK 1
BLOCK 2
BLOCK 3
120
120

FIG. 8

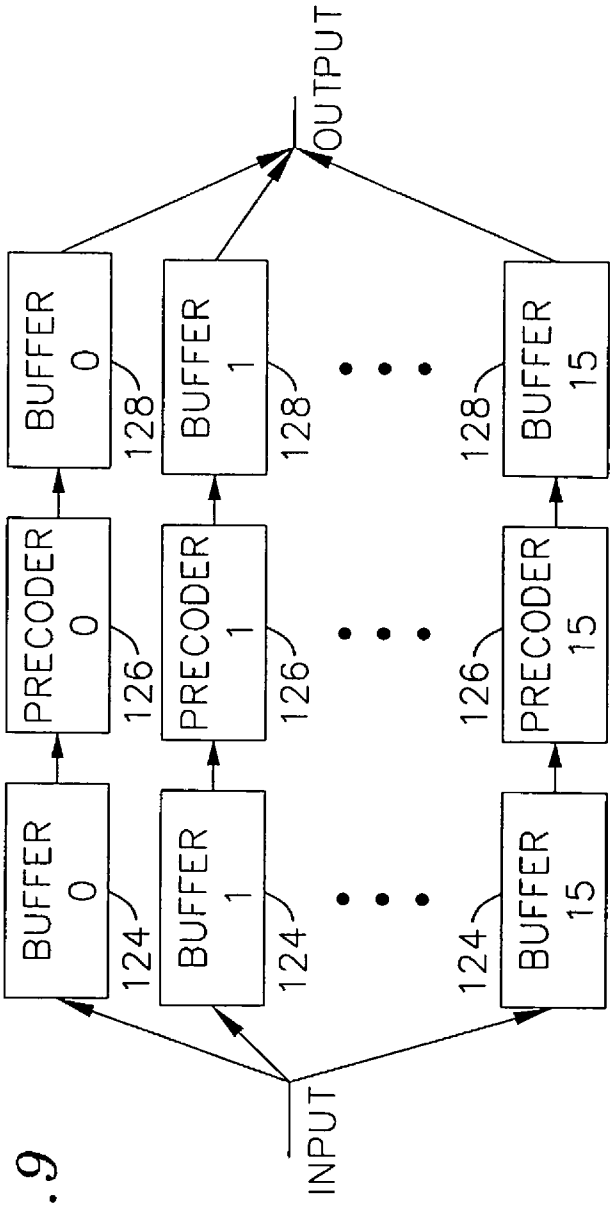
INPUT
BUFFER 0
BUFFER 1
BUFFER 15
124
124
124
PRECODER 0
PRECODER 1
PRECODER 15
126
126
126
BUFFER 0
BUFFER 1
BUFFER 15
128
128
128
OUTPUT

FIG. 9

FIG. 10

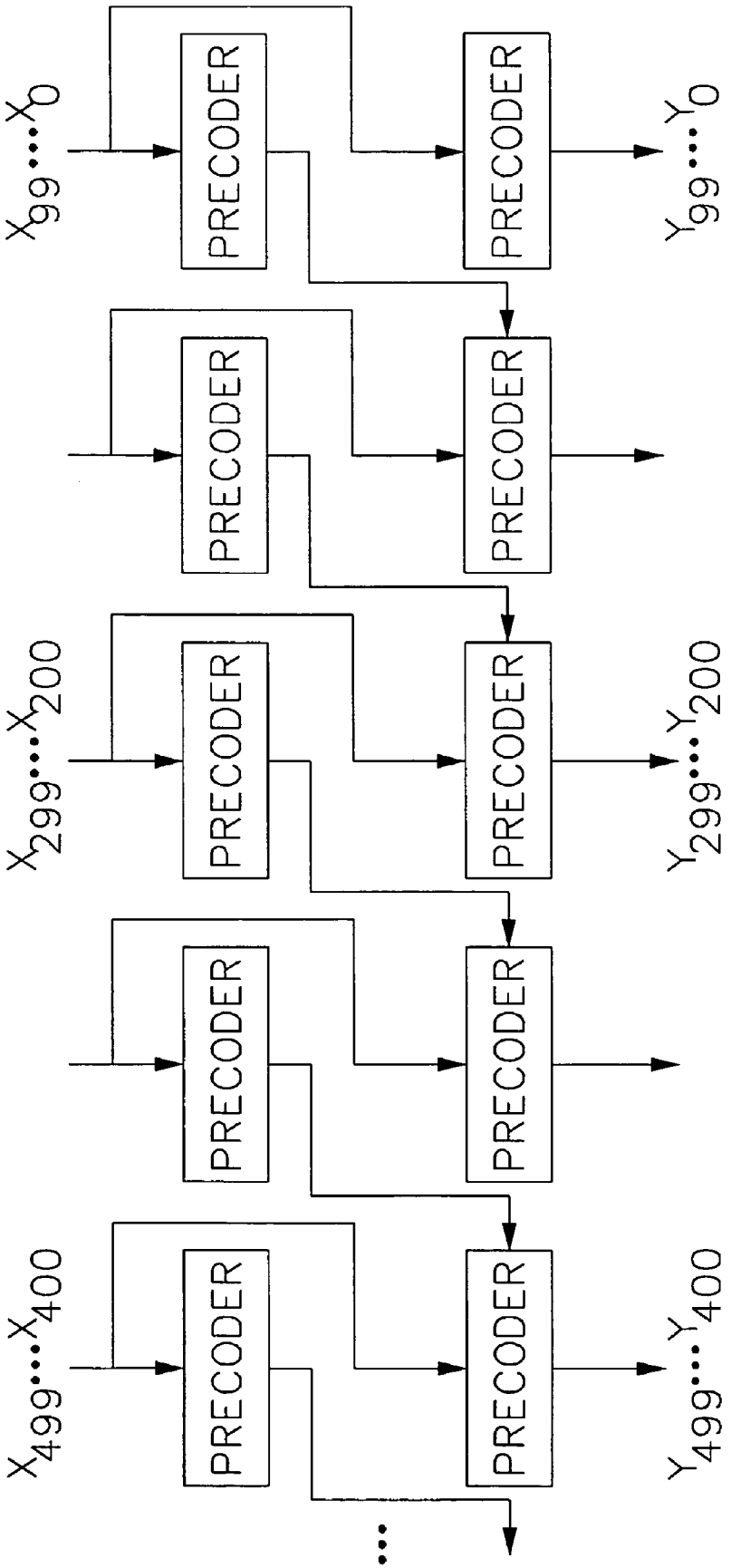
X499...X400
X299...X200
X99...X0
PRECODER
PRECODER
PRECODER
PRECODER
PRECODER
PRECODER
PRECODER
PRECODER
Y499...Y400
Y299...Y200
Y99...Y0

FIG. 11

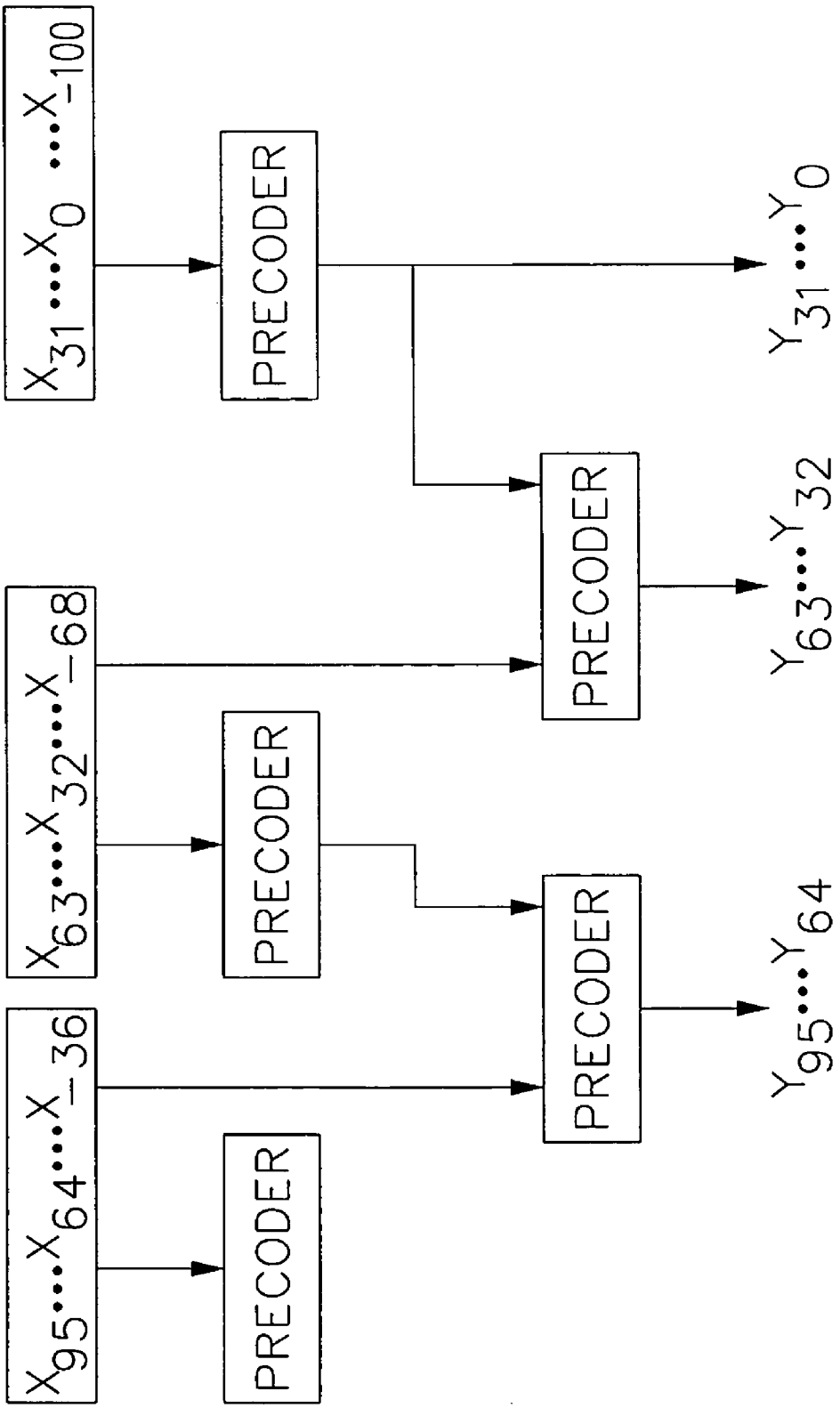
$X_{31} \cdots X_0 \cdots X_{-100}$
$X_{63} \cdots X_{32} \cdots X_{-68}$
$X_{95} \cdots X_{64} \cdots X_{-36}$
PRECODER
PRECODER
PRECODER
PRECODER
PRECODER
$Y_{31} \cdots Y_0$
$Y_{63} \cdots Y_{32}$
$Y_{95} \cdots Y_{64}$

FIG. 12

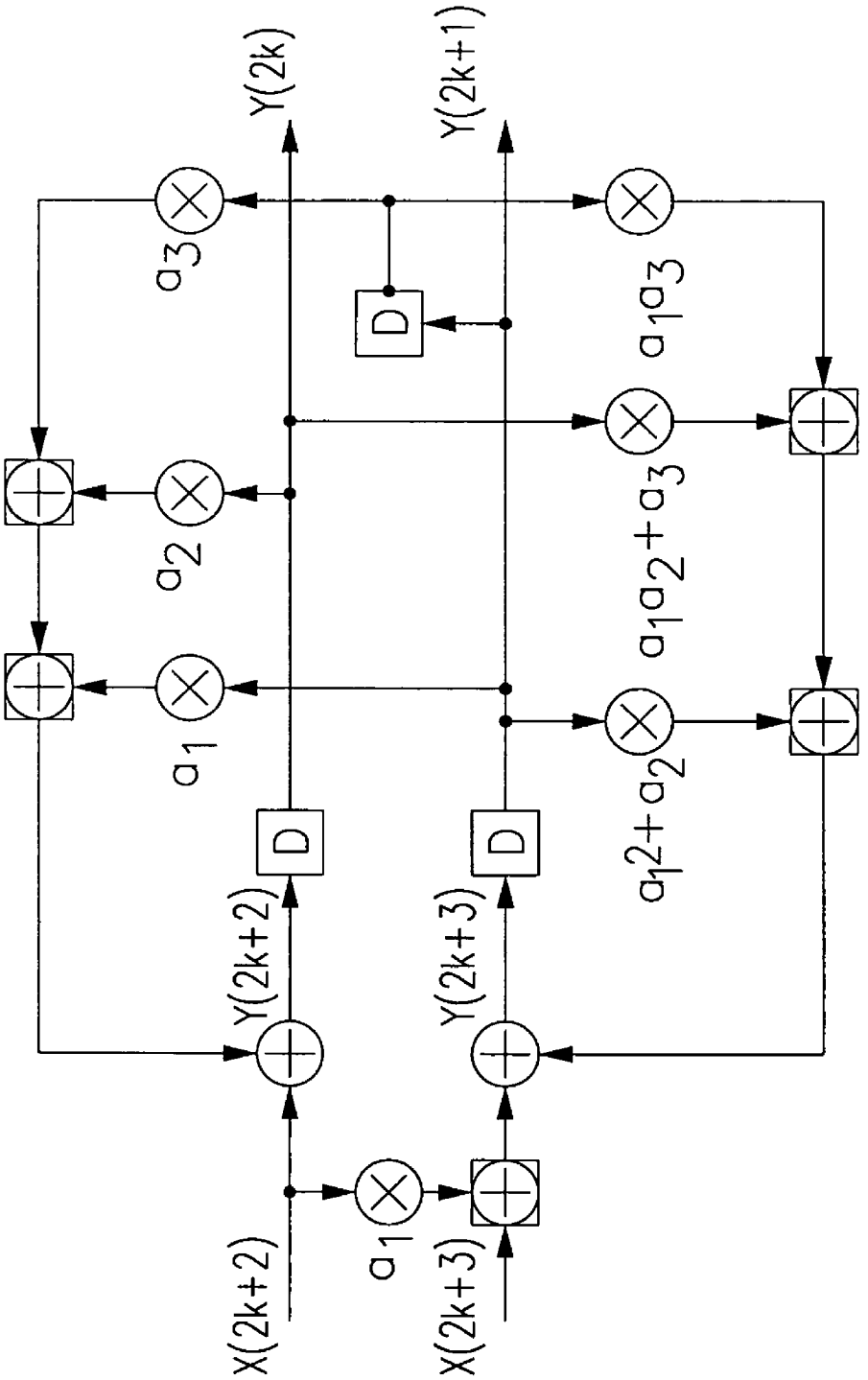
X(2k+2)
X(2k+3)
a1
Y(2k+2)
Y(2k+3)
D
D
a1
a2
a3
Y(2k)
Y(2k+1)
D
a1a2+a2
a1a2+a3
a1a3

FIG. 13

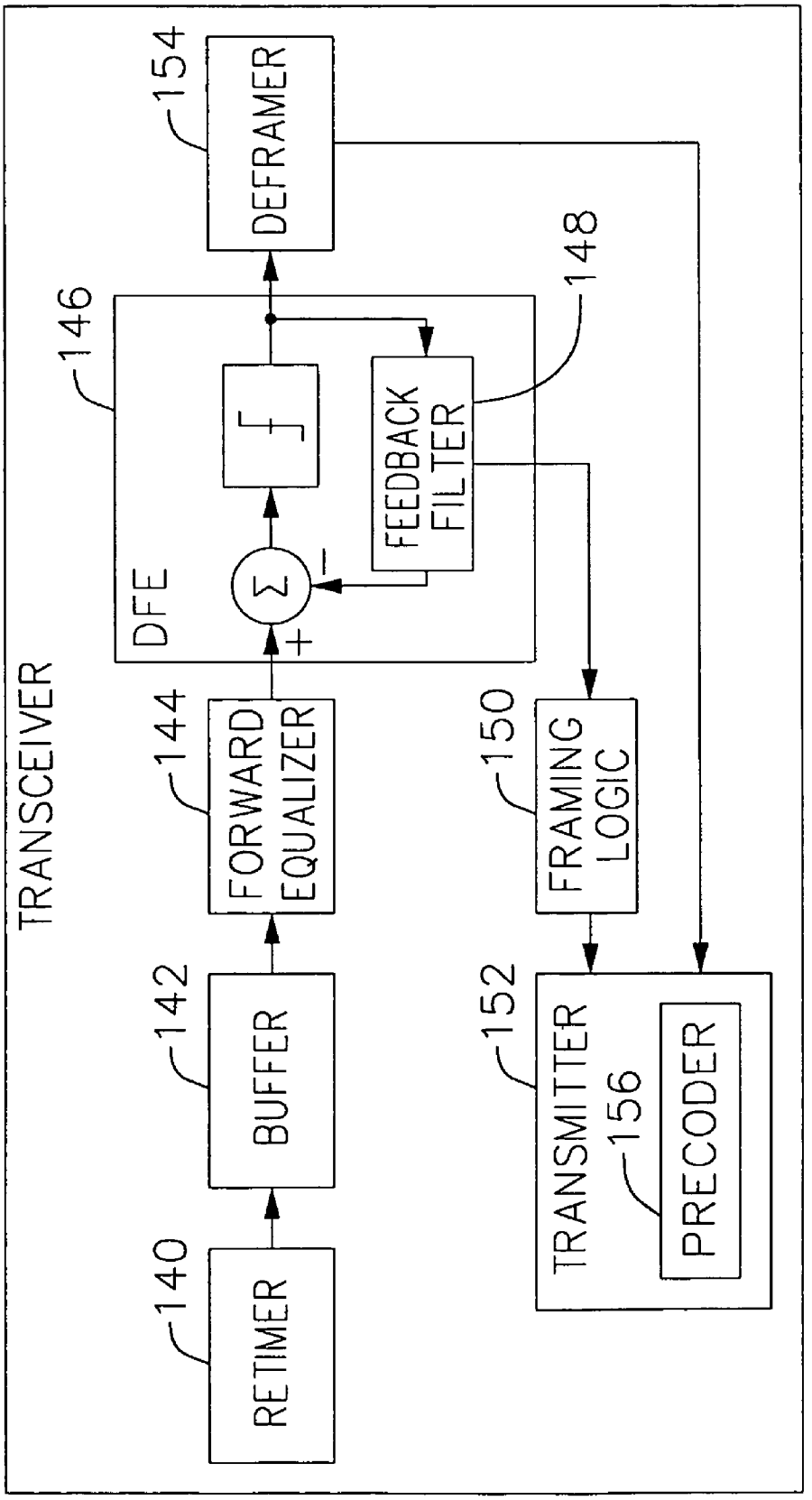
TRANSCEIVER
140
RETIMER
142
BUFFER
144
FORWARD EQUALIZER
146
DFE
Σ
+
−
FEEDBACK FILTER
148
154
DEFRAMER
150
FRAMING LOGIC
152
TRANSMITTER
156
PRECODER

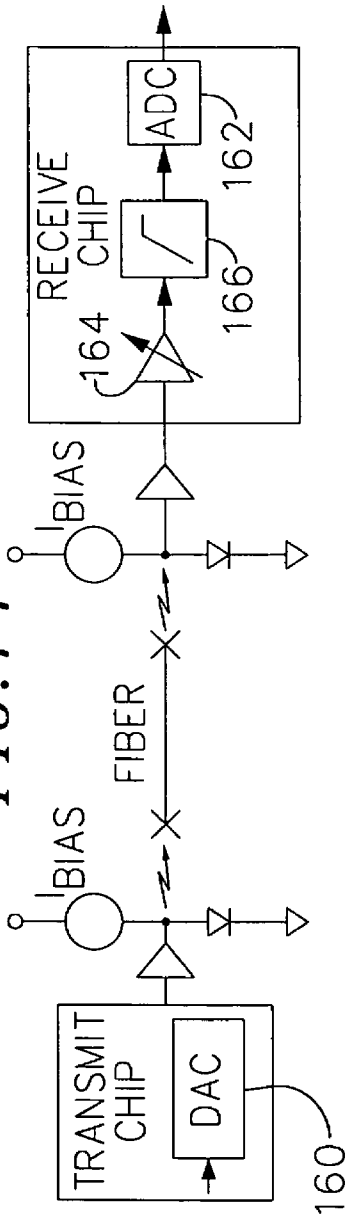
TRANSMIT CHIP
DAC
160
BIAS
BIAS
FIBER
RECEIVE CHIP
164
166
ADC
162

FIG. 14

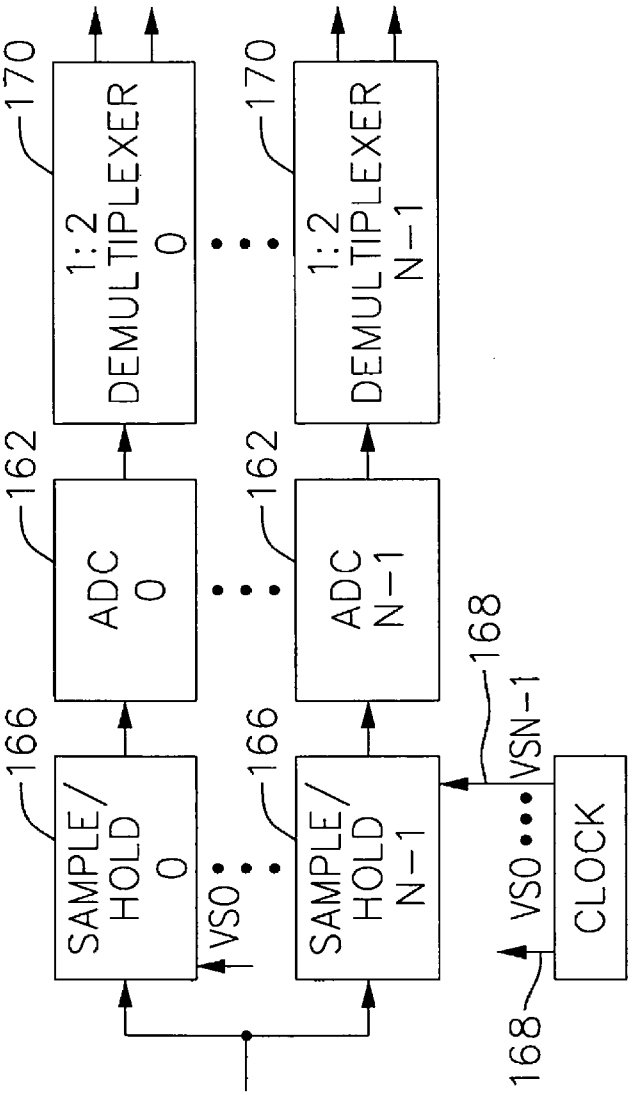
SAMPLE/ HOLD 0
166
ADC 0
162
1:2 DEMULTIPLEXER 0
170
VS0
SAMPLE/ HOLD N−1
166
ADC N−1
162
1:2 DEMULTIPLEXER N−1
170
VS0
VSN−1
168
CLOCK
168

FIG. 15

FIG. 16

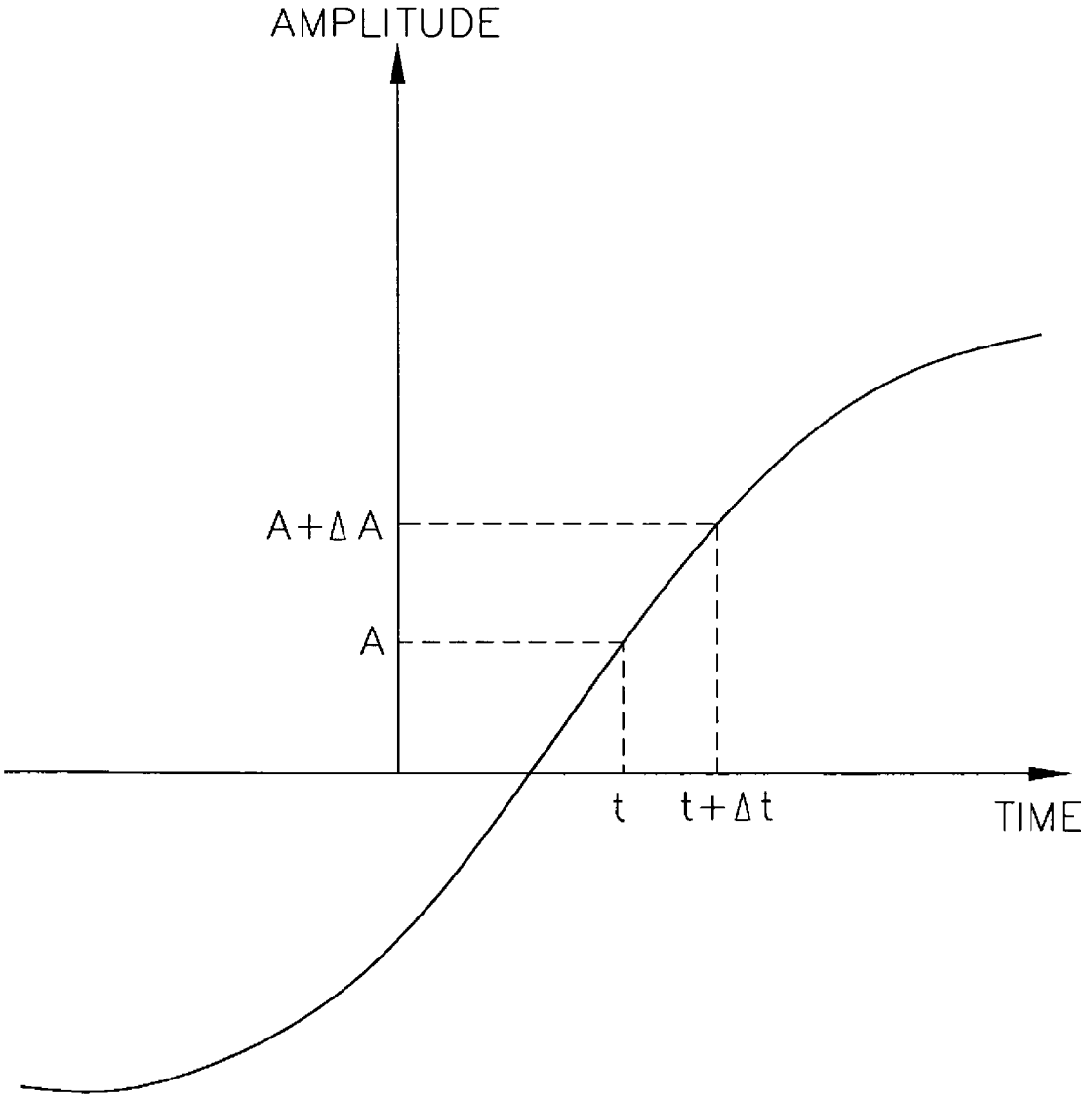

FIG. 17

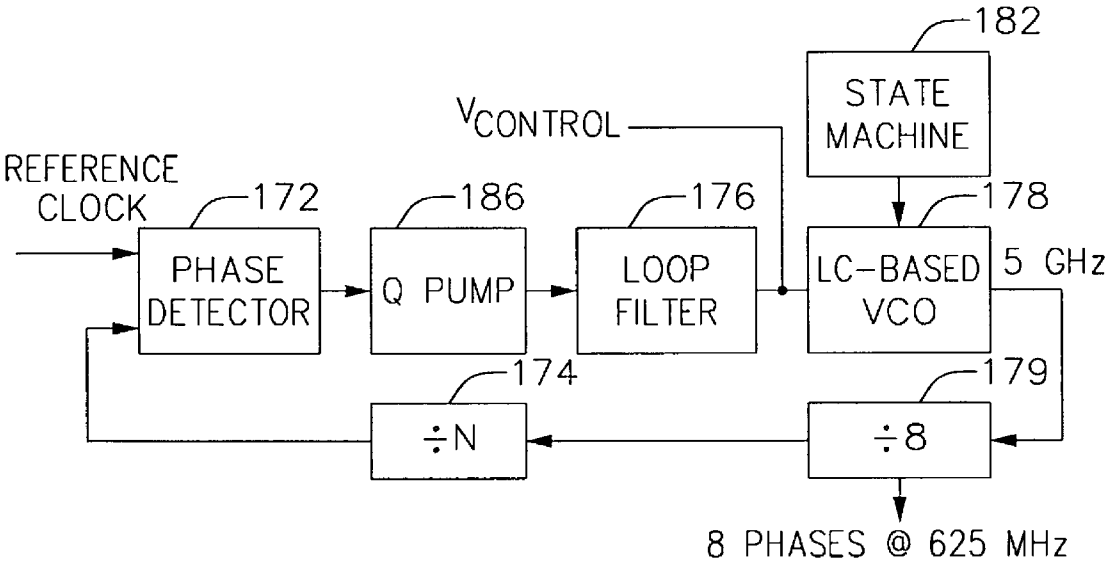
182
STATE MACHINE
VCONTROL
REFERENCE CLOCK
172
186
176
178
PHASE DETECTOR
Q PUMP
LOOP FILTER
LC-BASED VCO
5 GHz
174
179
÷N
÷8
8 PHASES @ 625 MHz

FIG. 18

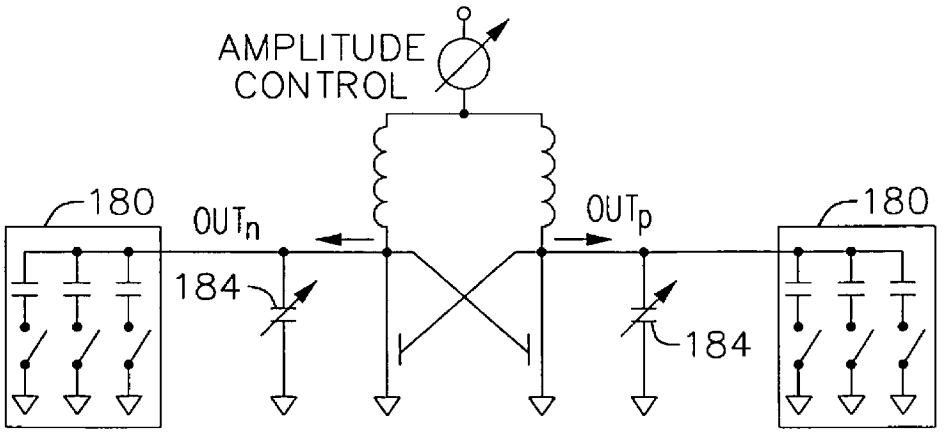
AMPLITUDE CONTROL
180
OUTn
OUTp
180
184
184

FIG. 19

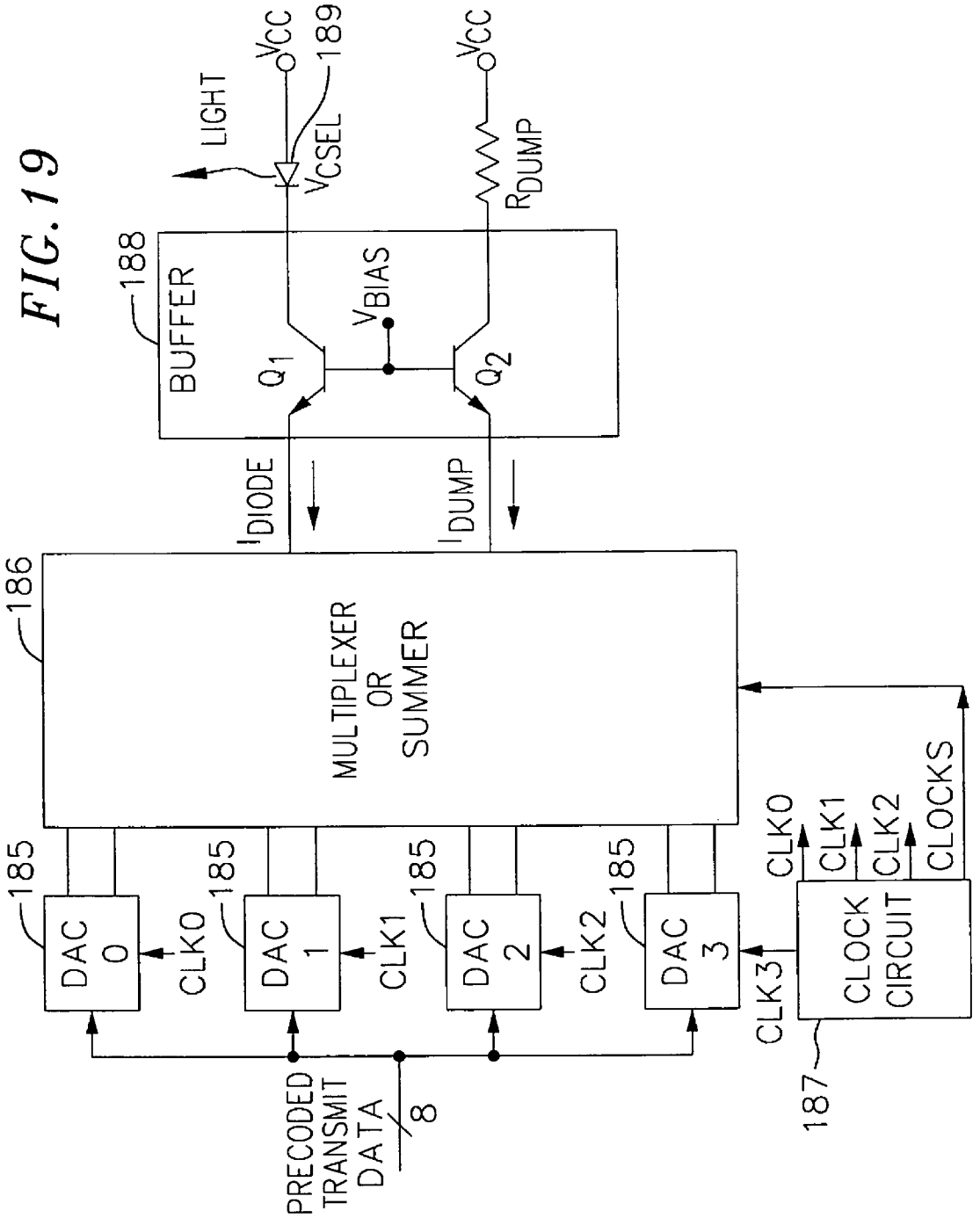
LIGHT
VCC
189
VCSEL
VCC
RDUMP
188
BUFFER
Q1
VBIAS
Q2
IDIODE
IDUMP
186
MULTIPLEXER OR SUMMER
185
DAC 0
CLK0
185
DAC 1
CLK1
185
DAC 2
CLK2
185
DAC 3
CLK3
CLK0
CLK1
CLK2
CLOCKS
CLOCK CIRCUIT
187
PRECODED TRANSMIT DATA
8

FIG. 20

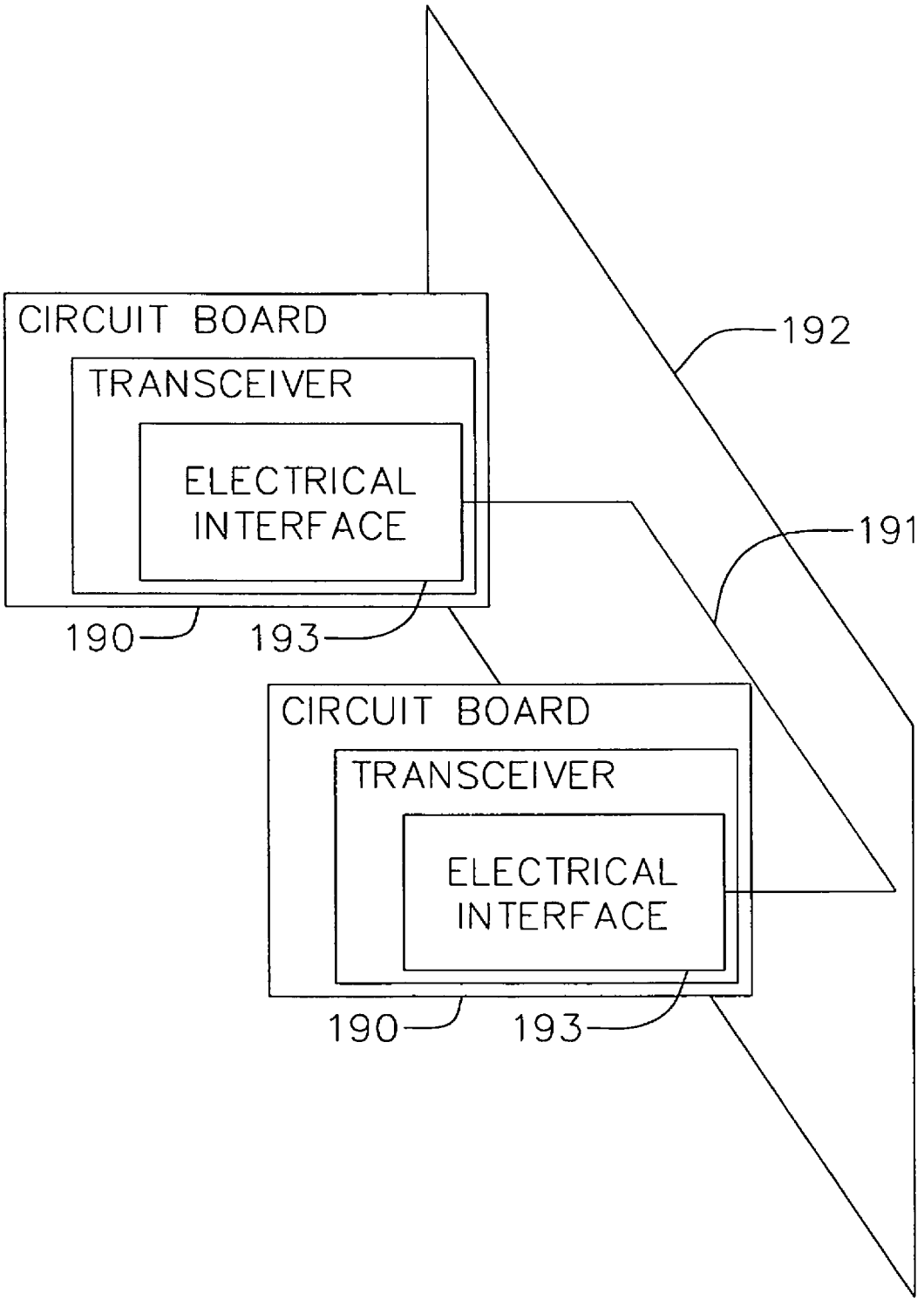
CIRCUIT BOARD
TRANSCEIVER
ELECTRICAL INTERFACE
190
193
192
191
CIRCUIT BOARD
TRANSCEIVER
ELECTRICAL INTERFACE
190
193

FIG. 21

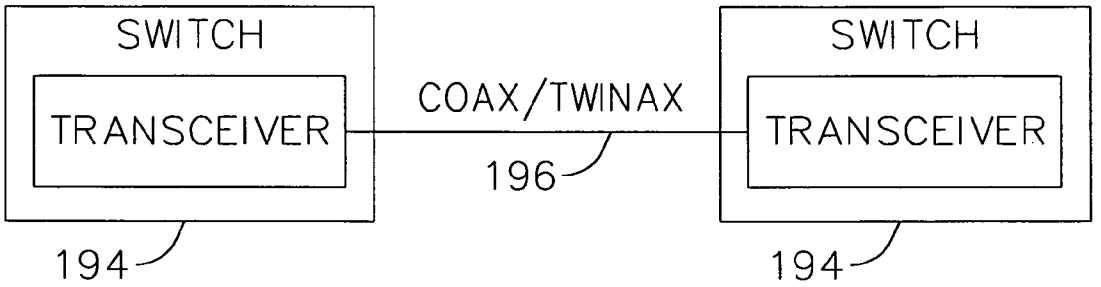
SWITCH
TRANSCEIVER
COAX/TWINAX
196
SWITCH
TRANSCEIVER
194
194

FIG. 22

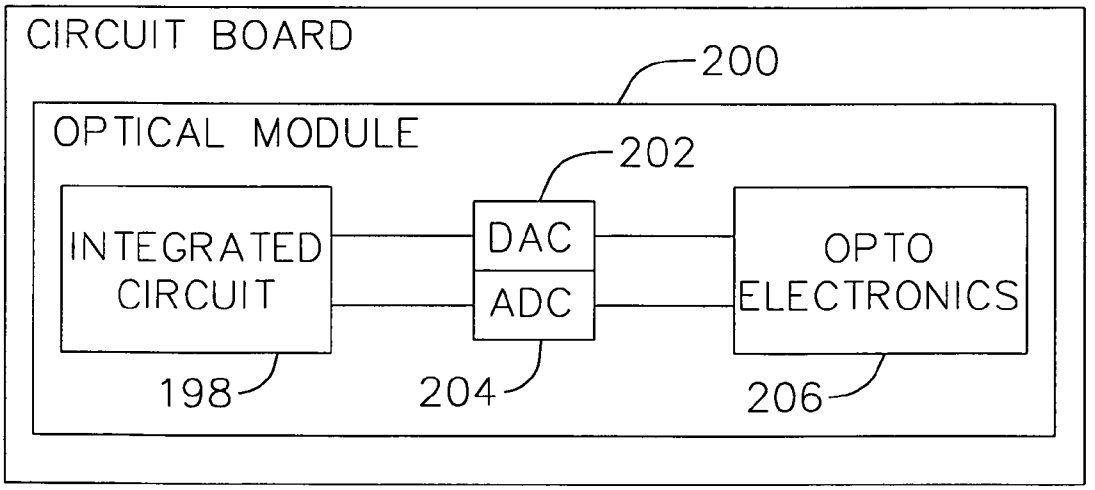
CIRCUIT BOARD
200
OPTICAL MODULE
202
INTEGRATED CIRCUIT
DAC
ADC
OPTO ELECTRONICS
198
204
206

FIG.23

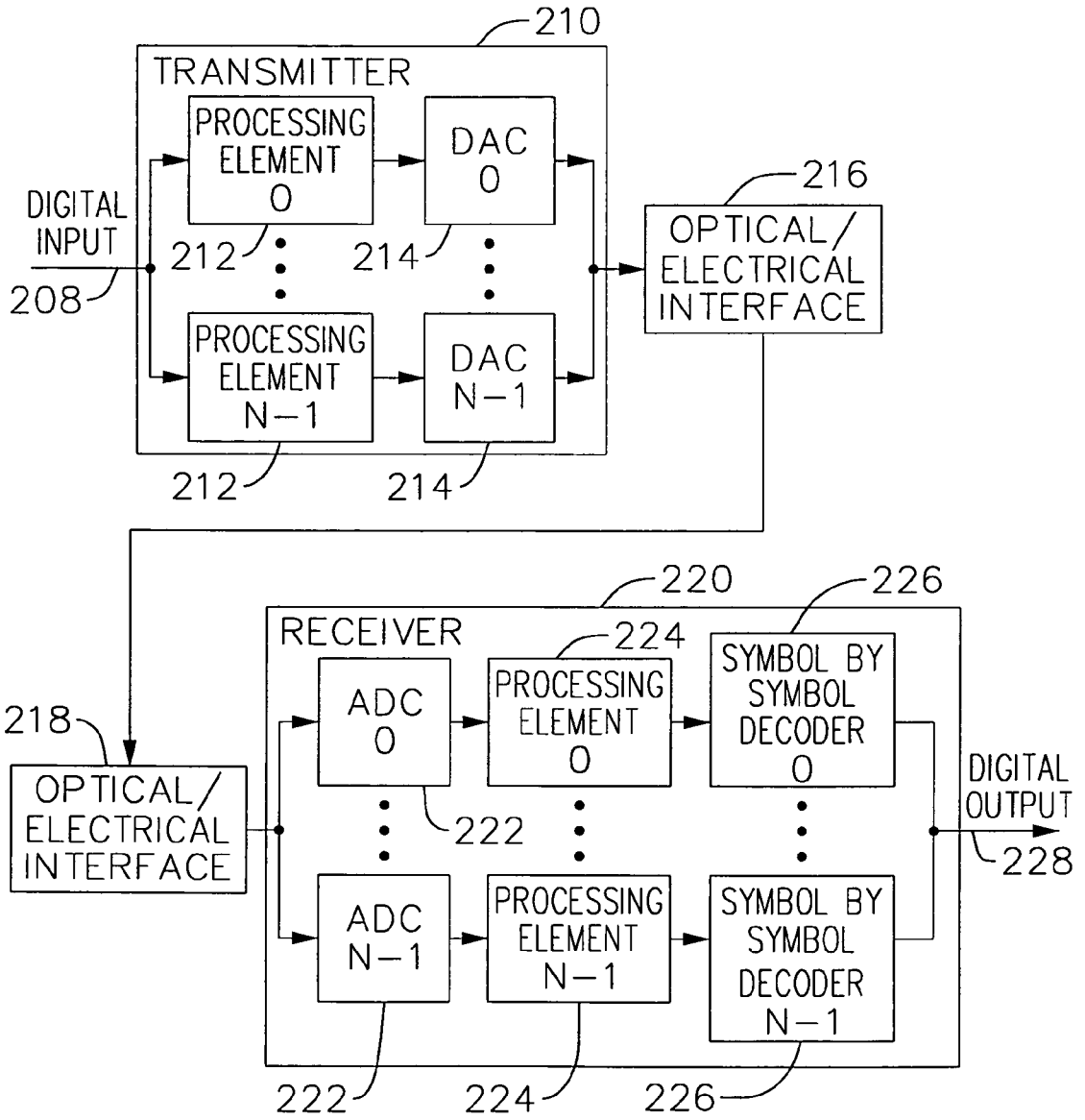
210
TRANSMITTER
PROCESSING ELEMENT 0
DAC 0
DIGITAL INPUT
208
212
214
PROCESSING ELEMENT N−1
DAC N−1
212
214
216
OPTICAL/ ELECTRICAL INTERFACE
220
226
RECEIVER
224
218
OPTICAL/ ELECTRICAL INTERFACE
ADC 0
PROCESSING ELEMENT 0
SYMBOL BY SYMBOL DECODER 0
222
DIGITAL OUTPUT
228
ADC N−1
PROCESSING ELEMENT N−1
SYMBOL BY SYMBOL DECODER N−1
222
224
226

SYSTEM AND METHOD FOR HIGH SPEED COMMUNICATIONS USING DIGITAL SIGNAL PROCESSING

CROSS-REFERENCE TO RELATED APPLICATION(S)

This application claims the benefit of U.S. Provisional Application No. 60/185,538, filed Feb. 28, 2000, and is a continuation-in-part of U.S. patent application Ser. No. 09/765,014, filed Jan. 17, 2001.

FIELD OF THE INVENTION

The invention relates generally to data communications and, more particularly, to systems and methods for performing digital signal processing in a communications system and communication devices.

BACKGROUND OF THE INVENTION

The field of data communications relates, in part, to techniques and circuits that facilitate transfer of data over a data channel between components in a communications system. For example, data may be transferred between two computers via a local area network. In addition, data may be transferred within a component. For example, two circuit boards in a communications component such as a switch or a router may communicate via signals routed through a backplane in the switch or the router.

There is a perpetual need for increased operating speed in data communications systems. On the one hand, developers are continually creating applications that require increasingly greater amounts of data to be sent between system components. On the other hand, end users in general want their applications to run faster which, in turn, often requires that associated data transfers are performed more quickly.

In an attempt to address the need for faster data communications, various groups have developed standards that specify high speed data transfers between components of data communication systems. For example IEEE standards 802.3ab and 802.3z define Ethernet systems for transferring data at rates up to one gigabit per second (1 Gbit/s). IEEE standard 802.3ae defines an Ethernet system for transferring data at rates up to 10 Gbits/s.

The development of these standards and the ever increasing need for faster data transfers create a need for techniques and circuits capable of achieving high data transfer rates while at the same time providing high reliability over relatively long distances. Moreover, there is an ever present economic motivation to achieve such results in a cost effective manner.

SUMMARY OF THE INVENTION

The invention is directed to data transmission systems and methods incorporating digital signal processing such as equalization precoding and parallel processing to achieve reliable data transmission at relatively high data transfer rates. The invention provides equalization precoding in transmission systems with optical channels and provides parallel processing techniques for optical and non-optical channel systems to increase the speed of the preceding and/or other processing. Moreover, the teachings of the invention may, in substantial part, be implemented in CMOS technology thereby providing a relatively low cost solution.

One embodiment of a system constructed according to the invention consists of a transceiver incorporating digital signal processors that process signals to be transmitted and received over a channel. In a transmit section of the transceiver a digital signal processor performs trellis encoding and Tomlinson-Harashima precoding for encoding the signals to be transmitted. In a receive section of the transceiver a digital signal processor performs forward equalization and Viterbi decoding for decoding signals received over the channel.

One embodiment of the transceiver processes signals for an optical channel. Significantly, this embodiment enables relatively high speed data transmission (e.g., 10 Gbits/s) over fiber optic cables such as multimode fiber that have relatively poor performance characteristics. This is accomplished by the precoding scheme which compensates for the characteristics of the optical channel. Thus, this embodiment can provide high speed data transfers over relatively long fiber spans. Significantly, this technique is in many respects more effective than conventional solutions (e.g., restricted mode launch, offset launch and vortex launch) that have been used to overcome bandwidth limitations of fiber optic cables.

One embodiment of the transceiver incorporates parallel encoding and decoding for processing signals for optical or non-optical channels. For example, the transmit section performs the trellis encoding and Tomlinson-Harashima preceding in parallel. And the receive section performs the forward equalization and Viterbi decoding in parallel. Significantly, this embodiment can be implemented in relatively low cost CMOS technology, thereby providing high performance with low cost components.

Another embodiment of a system constructed according to the invention incorporates a precoder initialization scheme whereby information related to the characteristics of the channel are transmitted from the receive section of one transceiver to the transmit section of another transceiver at the other end of the channel.

BRIEF DESCRIPTION OF THE DRAWINGS

These and other features, aspects and advantages of the present invention will be more fully understood when considered with respect to the following detailed description, appended claims and accompanying drawings, wherein:

FIG. **1** is a block diagram of one embodiment of a system incorporating equalization precoding for an optical channel in accordance with the invention;

FIG. **2** is a block diagram of one embodiment of a transmitter incorporating parallel equalization precoding in accordance with the invention;

FIG. **3** is a block diagram of one embodiment of a trellis encoder that may be used in the transmitter of FIG. **2**;

FIG. **4** is a block diagram of one embodiment of a Tomlinson-Harashima precoder that may be used in the transmitter of FIG. **2**;

FIG. **5** is a block diagram of one embodiment of a receiver that may be used in conjunction with the transmitter of FIG. **2**;

FIG. **6** is a block diagram of one embodiment of a forward equalizer that may be used in the receiver of FIG. **5**;

FIG. **7** is a block diagram of one embodiment of a parallel Tomlinson-Harashima precoder in accordance with the invention;

FIG. **8** is a conceptual block diagram relating to another embodiment of a parallel Tomlinson-Harashima precoder in accordance with the invention;

FIG. **9** is a block diagram of one embodiment an implementation of the parallel Tomlinson-Harashima precoder of FIG. **8**;

FIG. **10** is a block diagram of one embodiment of a double row Tomlinson-Harashima precoder in accordance with the invention;

FIG. **11** is a block diagram of another embodiment of a double row Tomlinson-Harashima precoder in accordance with the invention;

FIG. **12** is a block diagram of another embodiment of a parallel Tomlinson-Harashima precoder in accordance with the invention;

FIG. **13** is a block diagram of one embodiment of a precoder initializer in accordance with the invention;

FIG. **14** is a block diagram of one embodiment of an analog interface in accordance with the invention;

FIG. **15** is a block diagram of one embodiment of an analog to digital converter in accordance with the invention;

FIG. **16** is a graph of clock jitter specifications for one embodiment of an analog interface in accordance with the invention;

FIG. **17** is a block diagram of one embodiment of a phase locked loop in accordance with the invention;

FIG. **18** is a block diagram of one embodiment of a voltage controlled oscillator in accordance with the invention;

FIG. **19** is a schematic diagram of one embodiment of a digital to analog converter circuit and an optical interface circuit in accordance with the invention;

FIG. **20** is a block diagram of one embodiment of a communications system having an electrical physical interface and incorporating transceivers with equalization precoding in accordance with the invention;

FIG. **21** is a block diagram of another embodiment of a communications system having an electrical physical interface and incorporating transceivers with equalization precoding in accordance with the invention;

FIG. **22** is a block diagram of one embodiment of an optical transceiver module incorporating equalization precoding in accordance with the invention; and

FIG. **23** is a block diagram of one embodiment of a system incorporating symbol-by-symbol decoding and/or alternative digital signal processing in accordance with the invention.

DETAILED DESCRIPTION OF THE INVENTION

The invention is described below, with reference to detailed illustrative embodiments. It will be apparent that the invention can be embodied in a wide variety of forms, some of which may be quite different from those of the disclosed embodiments. Consequently, the specific structural and functional details disclosed herein are merely representative and do not limit the scope of the invention.

FIG. **1** is a simplified block diagram of one embodiment of a data transmission system S utilizing equalization precoding in accordance with the invention. A transmitter **20** sends data to a receiver **22** over an optical channel **24**. In a typical implementation, the transmitter **20** communicates with the receiver **22** according to the International Standard's Organization Open Systems Interconnection (ISO) model. The ISO model defines various protocols for formatting the data. Here, each protocol defines formatting for different stages of transmission ranging from a presentation level (presentation of the data to the end user) to a physical level (transmission of the data over a physical medium). In the OSI context, the invention is primarily concerned with the physical level.

In FIG. **1**, the high level processing in the transmitter **20** formats a data stream to generate packetized data per the OSI model. This data is sent to a transmit physical interface **26**, typically via a parallel data bus **28**. The transmit physical interface **26** processes the data to a form suitable for transmission over a particular type of channel (e.g., optical). A corresponding receive physical interface **30** in the receiver **22** processes signals received over the channel **24** and presents them via bus **32** to the non-physical layers (e.g., high level processing) for processing per the OSI model.

In accordance with the invention, the physical interfaces **26** and **30** provide equalization to compensate for the characteristics of the channel **24**. Moreover, in this embodiment, the physical interfaces **26** and **30** include parallel structures for performing equalization processing (encoding or decoding) in parallel.

The equalization function is at least partially provided in the transmitter portion **20** of the system S. A set of parallel trellis encoders **34** processes data from the data bus **28**. A set of parallel transmit equalizers **36** process data from the trellis encoders **34**. For example, the output of each trellis encoder may be sent to a unique transmit equalizer. Parallel digital to analog converters (DACs) **38** convert the output of the parallel transmit equalizers **36** to a serial analog stream which drives a transmit optical interface **40**.

On the receiving end of the optical channel **24**, a receive optical interface **42** drives parallel analog to digital converters (ADCs) **44**. The ADCs **44** provide digital streams to a set of parallel forward equalizers **46**. A set of parallel trellis decoders process **48** data from the equalizers **46**. For example, the output of each forward equalizer may be sent to a unique trellis decoder.

The operation and implementation of the components of FIG. **1** will be discussed in more detail in conjunction with the remaining figures. To facilitate a better understanding of these components, the objectives of the embodiment of FIGS. **2-6** will be discussed.

This embodiment utilizes five-level pulse amplitude modulation (PAM-5) signaling at 5 gigabaud per second (5 Gbaud/s). The optical channel typically consists of a standard 62.5/125 μm fiber optic cable with a bandwidth of 160 MHz/500 Mhz ·kilometer for 850 nm/1310 nm lasers, respectively. For example, for a fiber length of 500 meters the bandwidth of the fiber is 1 Ghz for a 1310 nm laser.

Significantly, the system incorporates adaptive equalization for compensating for intersymbol interference introduced by the limited bandwidth of the multimode fiber. That is, the adaptive equalizer tracks the variations of the laser and fiber response over time and, in response, the system provides appropriate compensation to the signals. For example, the system uses nonlinear equalization to compensate for the nonlinearity of the laser. In this embodiment, the transmit equalizer **36** of FIG. **1** is implemented as a Tomlinson-Harashima precoder.

Through the use of parallel processing in the transmitter, receiver and data converters, a CMOS integrated circuit constructed according to the invention may achieve a 5 GHz effective sampling rate with a 312.5 MHz actual clock rate. In sum, the embodiment of FIGS. **2-6** uses a 4-dimensional, 8-state, 4-way interleaved Ungerboeck trellis coding and may achieve a coding gain of approximately 6 dB over an uncoded PAM-5 system.

Referring now to FIGS. **2-6**, FIGS. **2-4** depict simplified block diagrams of selected components for a transmitter. FIGS. **5-6** depict simplified block diagrams of selected components for a receiver. These components are described as part of a 10 Gbit/s Ethernet system. In one embodiment, the transmitter and receiver sections described herein are implemented as a transceiver integrated circuit constructed as a single chip.

In the transmitter T of FIG. **2**, a transmitter section **50** encodes signals received from a media access controller **52** to

provide an encoded data stream that drives a laser circuit **54**. The laser circuit **54** generates optical signals that are sent over an optical channel (not shown).

The basic operation of the media access controller **52** is known in the art and will not be treated in detail here. For a 10 Gbit/s implementation, a data bus **56** from the media access controller **52** to the transmitter section **50** comprises 32 signals, each of which operates at 312.5 MHz.

A system interface **58** terminates the signals from the data bus **56** and routes them to a physical coding sublayer **60**. In general, the operations of the system interface **58** and the physical coding sublayer **60** are known in the art. For example, the physical coding sublayer **60** performs operations such as scrambling, idle generation, start of stream delimiter insertion and end of stream delimiter insertion.

In accordance with one embodiment of the invention, the physical coding sublayer **60** also incorporates a set of parallel trellis encoders **62**. For example, the code may operate in blocks of sixteen samples with a block rate of 5 GHz/16=312.5 MHz. This provides an intrinsic parallelism (by a factor of 16) in both the encoder and the decoder (discussed below), which run at a clock rate of 312.5 MHz. The teachings of the invention may be applied to any number of levels of parallelism. For example, for a 5 GHz input the system may incorporate eight levels operating at 625 MHz. In general, the number of parallel levels and the speed at which they operate will depend on system design goals.

As represented by the designations on the trellis encoders **62**, any number of trellis encoders **62** may be used in implementing the teachings of the invention. For the purposes of this example, the designation "T" is four. Thus, there are four trellis decoders **62** operating in parallel.

FIG. **3** depicts one embodiment of one of the trellis encoders. Each encoder processes eight of the **32** input signals. and outputs four PAM-5 signals. In this embodiment, the encoder **62** consists of a 4-dimensional, 8-state Ungerboeck trellis encoder. Thus, the combination of the four parallel trellis encoders **62** provides 4-dimensional, 8-state, 4-way interleaved Ungerboeck trellis coding.

The four dimensions consist of four consecutive samples of the signal. For each block of sixteen samples, the first four samples are processed by the first trellis encoder, the next four samples are processed by the second trellis encoder, and so forth.

Referring again to FIG. **2**, the outputs of the trellis encoders **62** are routed to a set of parallel dynamics limited Tomlinson-Harashima precoders **64**. As represented by the designation: "0 . . . N−1," any number of precoders may be used in implementing the teachings of the invention. For the purposes of this example, the designation "N" is sixteen. Thus, in this embodiment there are sixteen precoders operating in parallel.

The operation of one embodiment of one of the Tomlinson-Harashima precoders is described in conjunction with FIG. **4**. The precoder is basically, in one embodiment, a filter with a response equal to the inverse of the response of the channel. For example, if the channel response has a z-transform 1+D(z), the precoder typically would have a response 1/(1+D(z)). Such a precoder **70** and channel **72** are illustrated, for example, in the top half of FIG. **4**.

In practice, the inverse filter could introduce high gain at some frequencies (where the channel has high attenuation). This could result in high peak values and high power at the output of the transmitter. To prevent this, a sequence $v_n=k_n \cdot M$ is added to the transmitted data sequence x_n. For a PAM-5 alphabet ($x \in \{-2, -1, 0, 1, 2\}$), M=5 and k_n is an arbitrary integer, such that x_n+v_n belong to the extended alphabet $\{\ldots, -7, -6, -5, -4, -3, -2, -1, 0, 1, 2, 3, 4, 5, 6, 7, \ldots\}$. Here, the specific choice of k_n is made on a symbol by symbol basis with the objective of minimizing the transmitted power.

In traditional Tomlinson-Harashima precoding a wrap-around (or overflow) operation is used to automatically generate v_n. This operation is denoted with the block mod(M) **74** in the bottom half of FIG. **4**. When the input is $u_n \geqq M/2$, the mod(M) operation forces y^n to the interval [−M/2, M/2] by adding $k_n \cdot M$ with $k_n<O$. Similarly, when input $u_n<M/2$, the mod(M) operation forces y_n to the interval [−M/2, M/2] by adding $k_n \cdot M$ with $k_n>O$. One will observe that this is the same operation as the two's complement representation of a number u_n when it overflows a register having a word length that allows representing numbers in the interval [−M/2, M/2].

The received signal is x_n+v_n. A perfectly open eye pattern may be achieved at the input of the receiver (as represented by the hypothetical display device **76**). However, the number of levels is larger than in the original alphabet. That is, in a PAM-5 implementation there will be more than five levels at the input of the receiver. To get the desired five levels the slicer determines x_n by finding the value of k_n that makes $x_n+v_n-k_n \cdot M$ fall within the original PAM-5 alphabet {−2, −1, 0, 1, 2}.

In Tomlinson-Harashima precoding k_n can take arbitrary integer values to strictly enforce the condition $-M/2 \leqq y_n \leqq M/2$. This could result in large values of x_n+V_n, the signal at the input of the receiver **78**. To reduce the dynamic range of the ADCs, it is desirable to constrain x_n+V_n. For example, in a PAM-5 system k may be selected such that $x_n+V_n \epsilon \{-4, -3, -2, -1, 0, 1, 2, 3, 4\}$. This results in a slight increase in the transmit power. However, this also reduces the required resolution of the ADCs.

Referring again to FIG. **2**, the output of each of the sixteen precoders **64** is routed to a set of parallel DACs **68**. Again, as represented by the designation: "0 . . . N−1," the number of DAC inputs matches the number of precoder outputs. Thus, in this embodiment there are sixteen DAC inputs. The DACs **68** convert the sixteen digital signals to a single 5 Gbaud/s serial stream that drives the laser circuit **54**.

Referring to FIGS. **5-6**, the operation of the receiver will now be discussed. In the receiver R of FIG. **5**, a photodetector **80** receives optical signals from an optical channel (not shown) to provide an encoded data stream to a receiver section **82**. The receiver section decodes the data stream and routes the decoded data to a media access controller **84**.

In a manner similar to conventional high speed optical receivers, the output of a photodetector **80** is amplified by a preamplifier **86** and filtered by a high pass filter **88**. Typically, the high pass filter **88** compensates for baseline wander.

The amplitude of the input signal to the set of parallel ADCs **90** is controlled by a programmable gain amplifier **92**. The gain of the amplifier **92** is controlled by an automatic gain control **94**. Significantly, the combination of the digitally controlled automatic gain control **94** and the analog programmable gain amplifier **92** provides a more effective method of controlling gain for an optical channel. By digitally processing the received optical signals, the gain of the amplifier **92** may be controlled more effectively. This may provide, in part, a method of efficiently utilizing the resolution of the ADCs **90**.

A timing recovery circuit **96** provides a number of clocks to the components of the receiver R. In this embodiment, f_B, the baud rate clock, runs at 5 GHz, f_C is $f_B/16$=312.5 MHz and, as discussed below, f_D is a sixteen phase version of f_C. It will be understood that these frequencies are examples and will depend, in part, on the speed of operation of the circuits and the number of parallel circuits in the receiver. For example, in

a preferred embodiment eight ADCs will be used, each of which will run at a clock frequency of 625 MHz for a 5 Gbaud/s input signal.

The set of parallel ADCs **90** sample the received analog data stream and generate digital signals (e.g., 6 bits per symbol) representative of the analog input signal. In the embodiment depicted, there are sixteen ADCs running at 312.5 Mhz. It will be understood that the number of ADCs and the speed at which they operate will depend on system design goals.

Each of the ADCs is driven by a unique phase of clock f_D. Thus, each of the ADCs will sample a different input symbol. This operation is analogous to a time-division demultiplexing operation on the input stream.

Since the outputs of the ADCs are out of phase with respect to one another, a retiming circuit **98** is used to, in effect, align the signals to provide sixteen samples during each clock cycle of f_C to a set of parallel forward equalizers **100**.

The forward equalizers **100** provide phase equalization (all-pass response) that equalizes, to some degree, the non-minimum-phase fiber response. FIG. **6** depicts a portion (to reduce the complexity of the figure) of one embodiment of a parallel forward equalizer, specially, four parallel 4-tap finite impulse response (FIR) filters. Here, $y(n)=a_0x(n)+a_1x(n-1)+a_2x(n-2)+a_3x(n-3)$.

It will be understood that for a different number of inputs, the FIR filter of FIG. **6** will be expanded to accept that number of inputs and provide that number of outputs. The FIR filter also will be expanded with respect to the number of filter taps. For example, in the embodiment of FIG. **5**, the FIR filter has sixteen inputs, sixteen outputs and sixteen filter taps. It should be appreciated, however, that the number of filter taps will not always equal the number of parallel blocks as is the case in this example.

The outputs of the forward equalizers **100** drive a 4-way interleaved, 4-dimensional trellis decoder **102**. In a preferred embodiment the trellis decoder is a Viterbi decoder. As indicated in FIG. **5**, the Viterbi decoders for this example operate at a clock speed of 312.5 MHz. Significantly, the use of precoding in this embodiment simplifies the implementation of the Viterbi decoder because the Viterbi decoder does not need to be designed to handle intersymbol interference. Thus, the decoder does not have to be combined with decision feedback equalization, even though the decoder speed is very high. Moreover, branch metrics can be pipelined. Thus, virtually all critical path issues in the Viterbi decoder are eliminated.

The outputs of the parallel trellis decoders **102** drive a physical coding sublayer **104**. The physical coding sublayer **104** performs several operations that are complementary to those performed by the physical coding sublayer **60** of FIG. **2**. This may include, for example, bit manipulation, descrambling and demultiplexing.

After the physical coding sublayer **104**, the signals are routed to a system interface **106** and then off of the chip to the media access controller **84**.

The parallel implementation of the precoder is relatively difficult due to the feedback loop. The invention is based, in part, on the realization that look-ahead techniques can be used to implement the precoder in a pipelined or parallel architecture. FIGS. **7-12** describe several implementations for a parallel precoder. These examples use a filter length, N, of 30 and a level of parallelism, L, of 16. In general, the number of filter taps that are needed depends on the characteristics of the channel (e.g., the fiber). For example, the length of the impulse response of the fiber determines the number of coefficients that are needed which, in turn, defines the number of taps.

FIG. **7** is a simplified block diagram of a low latency parallel precoder incorporating overlapped block precoding. This embodiment is for a 32 wide precoder. That is, it provides 32 levels of parallelism. To reduce the complexity of FIG. **7** only a few representative precoders and associated inputs and outputs have been illustrated.

In effect, this embodiment provides the feedback data for a precoder via a set of parallel precoders that operate on series of earlier input states. For example, the input signal **110** for precoder **112** comprises information for input state x_{-1} through x_{-100} via precoders **114** and **116** and the intervening decoders that are not shown and their associate inputs (e.g., x_{-99} and x_{-100} and the other inputs that are not shown).

It has been observed that good results may be obtained when the amount of overlap is equal to approximately three times the number of taps. Thus, for this embodiment (32 taps), a length of overlap for each precoder has been selected to be 100. The amount of overlap may be characterized as the number of samples that are necessary for the transient response of the filter to reach a sufficiently low level such that the filter closely approximates an ideal filter with an infinite number input samples. The transient response depends on the parameters of the filter, e.g., the closeness of the poles to the unit circle in the frequency domain. In practice the precise amount of overlap for a given system may be selected based on the characteristics (e.g., S/N) that are desired in the communication system.

The embodiment of FIG. **7** provides a relatively low latency of 32 clock cycles. However, it does require a relatively large number of precoders (132) with their associated multipliers (132×30=3960, for 32 outputs).

FIG. **8** is a conceptual block diagram for another embodiment of a parallel precoder. The input stream is divided into sixteen overlapping blocks. In this example, the block length is selected as 1000 and the overlap **120** between each block is equal to 3N, which has been rounded up to 100. The overlap **120** provides the necessary inputs from previous states for those samples near a block boundary. Each block is filtered independently, and the first 100 outputs are discarded. Thus processing overhead is increased by 10%. The sizes of the blocks are selected to enable each block to, in effect, operate independently of the other blocks. In this way one can define a filter response that is as close to the desired optimal response as is practical.

Referring to FIG. **9**, the embodiment of FIG. **8** is implemented by routing the input to sixteen buffers **124**. For example, buffer **0** may store the 1000 bits for block **0**, buffer **1** may store the 1000 bits for block **1** and so forth. Each precoder then sequentially processes the bits in its block of 1000 bits and outputs its results to an associated buffer **128**. The outputs of the buffers **128** are multiplexed to form the precoded data.

To reduce the complexity of FIGS. **8** and **9** only a few representative blocks, buffers and precoders have been illustrated.

This embodiment has the advantage that only sixteen precoders are needed and, consequently, 480 multipliers (16×30). However, the buffers must operate at 5 GHz and additional circuitry is required to provide the buffers.

FIG. **10** is a simplified block diagram of another embodiment of a parallel precoder comprising a double row precoder. To reduce the complexity of FIG. **10** only a few representative precoders and associated inputs and outputs have been illustrated.

In this embodiment, each precoder operates on 100 symbols in, for example, a serial manner. All but one of the

precoders in the lower row receives an input associated with 100 precoding inputs from an associated precoder in the top row.

For the example where there are 16 parallel precoders, 1600 outputs are computed in 100 clock cycles. This embodiment has the advantage that the hardware overhead is only increased by a factor of two. However, the latency is longer (100 clock cycles in this example) and buffers are needed to buffer the data for the 100 clock cycles.

FIG. **11** is a simplified block diagram of another embodiment of a parallel precoder comprising an overlapped double row precoder. To reduce the complexity of FIG. **11** only a few representative precoders and associated inputs and outputs have been illustrated.

In this embodiment there is an overlap of 32 samples between the precoders in the top row. The latency is only 32 clock cycles. However, buffers are needed.

The lower row of precoders can be operated at a clock speed that is approximately four times slower than the clock speed of the top row of precoders. This is because the precoders in the top row operate on 132 samples while the precoders in the bottom row operate on 32 samples. Thus, folding (time multiplexing) can be exploited to optimize the circuit.

FIG. **12** is a simplified block diagram of another embodiment of a basic parallel precoder comprising two parallel stages of a 3-tap infinite impulse response (IIR) filter. The circuit may be described by the following equations:

$$y(n)=a_1y(n-1)+a_2y(n-2)+a_3y(n-3)+x(n) \quad \text{EQUATION 1}$$

$$y(n)=a_1[a_1y(n-2)+a_2y(n-3)+a_3y(n-4)+x(n-1)]+a_2y(n-2)+a_3y(n-3)+x(n)$$

$$=(a_1^2+a_2)y(n-2)+(a_1a_2+a_3)y(n-3)+a_1a_3y(n-4)+a_1x(n-1)+x(n) \quad \text{EQUATION 2}$$

n=2+2 in equation 1 and n=2k+3 in equation 2.

$$y(2k+2)=a_1y(2k+1)+a_2y(2k)+a_3y(2k-1)+x(2k+2) \quad \text{EQUATION 3}$$

$$y(2k+3)=a_1^2+a_2y(2k+1)+(a_1a_2+a_3)y(2k)+a_1a_3y(2k-1)+a_1x(2k+2)+x(2k+3) \quad \text{EQUATION 4}$$

Extending this concept to an L-parallel implementation, y(kL+L) . . . y(kL+2L−1) is computed in terms of y(kL) . . . y(kL+L−1). In an L-parallel implementation, the clock speed is L times slower than the symbol speed, i.e., each delay element is L-times slower.

This basic implementation provides high speed and low latency. In addition, it is more stable because the poles are raised to the Lth power. Moreover, it has better finite precision effect. However, this implementation is suboptimal because it is difficult to minimize the power of the output. Hence, the embodiments of FIGS. **7-11** are preferred because these embodiment overcome this problem.

Referring now to FIG. **13**, one embodiment of a circuit that provides precoder initialization is described. In this embodiment, information related to the characteristics of the channel (e.g., precoder coefficients) are transmitted from the receive section of one transceiver to the transmit section of another transceiver over the channel. This initialization procedure takes place before the channel is completely operational.

During initialization a buffer captures a block of N samples (e.g., N=1024) from the ADC at a 312.5 MHz clock rate. For example, in the receive section of the transceiver, the sixteen, 6 bit, 312.5 MHz signals from a retimer **140** (i.e., retiming **98** in FIG. **5**) are stored in a buffer **142**.

Data from the buffer **142** is read out to provide the input for an auxiliary decision feedback equalizer. However, the forward equalizer **144** and decision feedback equalizer **146** are designed to operate at a reduced clock rate, for example, F_{SLOW}=100 MHz, using the samples from the buffer **142**.

While the buffer is being emptied, signal samples from the ADC are discarded. However, it will be appreciated that useful data can be transmitted and received during these blocks, except for a transient period at the beginning of the block. Since this procedure is executed at both ends of the link, this establishes a full-duplex channel with a data rate of approximately 200 Mbit/s (for F_{SLOW}=100 MHz).

In one embodiment, this auxiliary channel may be used during startup to send, for example, decision feedback equalizer coefficients from the receiver to the transmitter thereby enabling programming of the precoder. For example, channel information generated by a feedback filter **148** in the decision feedback equalizer **146** may be sent to framing logic **150** that frames the channel information and, in cooperation with the transmitter **152**, inserts it into the channel for retrieval by the receiver on the other side of the channel. The framing operation would include, for example, adding a marker to indicate the beginning of the channel information.

Then when that channel information is received, a deframer **154** reads the output of the decision feedback equalizer **146** to obtain the channel information. Here, the deframer **154** determines which input data is valid and locates the marker that identifies the beginning of the channel information. The deframer **154** sends this channel information to its transmitter to update the coefficients in the transmitter's precoder **156**.

In another embodiment, the precoder **156** is continually adapted to the channel during normal operation of the transceiver (e.g., when the channel is carrying data). In this case, a portion of the bandwidth of the channel is allocated to carry the channel information.

In one embodiment the channel information consists of coefficients generated by an adaptive equalization algorithm such as least mean square (lms). This information may be in the form of 16-bit words. The framer and associated processing would serialize these 16-bit words and route the serial bits to be sent over the channel. At the other end of the channel, the deframer and associated processing use known characteristics of the coefficients to reassemble the coefficients and program each coefficient in the appropriate manner in the precoder. In accordance with the invention, other methods of generating channel information may be used as well as other types of information that characterize the channel. In these embodiment, additional processing may be needed to generate coefficients or other information for the precoder.

Referring now to FIGS. **14-19**, one embodiment of an analog interface for the transmission system will be treated in more detail. FIG. **14** depicts a high level view of an analog interface that may be used for a 10 Gbit/s Ethernet channel. The input to the DAC **160** in the transmit section consists of a signal with 8-bit resolution. In this case, a minimum of 6 bit resolution is required for the ADC **162** in the receive section. Both the DAC **160** and the ADC **162** operate at a clock rate of 5 GHz. The receive high pass corner is 200 MHz. The receive sections also includes a −20 . . . 0 db attenuator **164** for amplitude control.

FIG. **15** depicts one embodiment of a receive ADC using, for example, eight (assuming N=8) parallel interleaved ADCs **162**. Each of the eight ADCs **162** generate 6 bit samples at a sampling rate of 5 GHz/8=625 MHz. Sample and hold circuits **166** are used to guarantee a low jitter sampling. A clock **168** generates eight phases **168** of the sample clock, spaced at 200 picoseconds. In this way the ADCs **168** are effectively

interleaved so that each ADC processes a portion of the input signal. Gain and phase errors between the ADCs may be compensated for digitally.

In some embodiments a demultiplexer may be used to widen the data bus from the ADCs **162**. For example, again assuming N=8, in the embodiment of FIG. **15** eight 1:2 demultiplexers **170** are used to convert the eight 625 MHz digital outputs of the ADCs **162** to sixteen 312.5 MHz signals.

In one embodiment, the ADCs are implemented in 0.15μ CMOS with a 1.8 V supply voltage, differential analog input of 1.0 Vpp, distortion at 2 GHz<−40 dB, a bit error rate of 10^{-15}, and clock jitter of <1.5 picosecond rms.

FIG. **16** depicts exemplary clock jitter requirements. Vin is defined as A sin ωt (assuming a sine wave input signal) Maximum amplitude is assumed to be 1 LSB. And $\Delta t=\Delta A/(A\omega\cos\omega t)$ with $\Delta A=2A/2^n$.

Then $\Delta t=2^{-n}/\pi f_{in}\cos(2\pi f_{in}-t)$, where f_{in}=input frequency and n=the resolution of the ADC. The maximum at zero crossing of the input signal $\Delta t_{max}=2^{-n}/\pi f_{in}$. Where n=6 and f_{in}=1 GHz, Δt_{max}=5 picoseconds.

FIG. **17** is a block diagram of one embodiment of a phase locked loop architecture with eight interleaved clocks operating at 625 MHz. A phase detector **172** compares the phase of the reference clock and a divide-by-N circuit **174**. The output of the phase detector **172** is sent to a charge pump (Q pump) **186** and then a loop filter **176** to generate a control voltage for an LC-based voltage controlled oscillator **178**. A divide-by-8 circuit **179** provides eight phases of a 625 MHz clock.

FIG. **18** is a block diagram of one embodiment of an LC-based voltage controlled oscillator for a low jitter clock generator. Switched capacitors **180** are controlled by the state machine **182** (FIG. **17**) to adjust the VCO center frequency over process and temperature (+/−20%). The varactor **184** is controlled by the charge pump **186** (FIG. **17**). This implementation utilizes a differential approach for power supply and substrate noise immunity.

FIG. **19** is a block diagram of one embodiment of a DAC circuit and transmit optical interface. The input to the circuit is an 8-bit digital signal. The output is a 5 gigasample per second signal. In one embodiment, a current-mode DAC circuit converts precoded PAM-5 symbols to driver current.

Significantly, this embodiment uses parallel interleaved DACs and a multiplexer or summer to accomplish high speed digital to analog conversion. That is, the output signals from the four 1.25 GHz current mode DACs **185** are interleaved to provide a 5 gigasample per second output signal.

In a preferred embodiment the DACs and the multiplexers are implemented using 0.15μ CMOS. Representative characteristics of this preferred embodiment include: spurious-free dynamic range>48 dB; total harmonic distortion>48 dB; single-ended output current=5 to 15 mA; and output capacitance<5 pF.

In one embodiment the 125 GHz output signals from the DACs **185** are sent to a multiplexer **186**. The multiplexer **186** time-multiplexes the four 125 GHz signals to generate a 5 GHz output signal under control of the clock signals generated by a clock circuit **187**.

In another embodiment the 125 MHz output signals from the DACs **185** are sent to a summer **186**. In this case, the outputs of the DACs are, in effect, tied together. Time-division multiplexing of the 125 MHz signals to produce a 5 GHz signal is accomplished in this case by carefully controlled timing of the clock signals to the DACs **185**. For example, CLK**0**, CLK**1**, CLK**2** and CLK**3** may be phase shifted from one another so that, in effect, only one of the DACs **185** drives its output at a given time.

The output of the multiplexer **186** or the summer **186** drives a buffer **188**. The function of the buffer is to isolate the capacitive output of the DAC circuit (e.g., DACs **185** and multiplexer/summer **186**) from the series resistance of the laser diode **189**. Typically, the interleaving of the DACs **185** results in a relatively high output capacitance for the DAC circuit. Thus, the buffer **188** reduces the bandlimiting effect that this relatively high output capacitance would have on the output signal.

In one embodiment, the buffer **188** is a current buffer. One embodiment of a current buffer is shown in FIG. **19**. The NPN transistors Q**1** and Q**2** may, for example, be silicon germanium RF transistors made with 70 GHz ft SiGe process. One example of a suitable transistor is the Infineon BFP620 transistor.

An example operating point for the current buffer of FIG. **19** is: Idiode_DC=approximately 10 mA; input impedance<4.0 ohms; input capacitance<0.9 pF; and output capacitance<0.15 pF.

Typically the optical output device is a laser diode **189** as depicted in FIG. **19**. For example, a vertical cavity surface emitting laser (VCSEL) may be used. In one embodiment the operating characteristics of the laser diode may be: Ion_max=5 mA; input capacitance<0.8 pF; and series resistance<30 ohms.

The specific implementation of a DAC circuit and a transmit optical interface according to the invention may take many forms. For example, the number, format and speed of the input signals, the number of DACs, the operating speed and characteristics of the components and the speed of the output signal depend on system design requirements.

Moreover, different types of DACs, multiplexers, summers, buffers and optical output devices may be used to implement a DAC circuit and transmit optical interface according to the invention. For example, many of these components may be implemented in silicon germanium. The multiplexer **186** may be implemented in a separate integrated circuit than the DACs **185**. The DACs **185** may be implemented in a different integrated circuit than the rest of the transmitter. Different circuits may be used for the current buffer. The buffer **188** may be a voltage buffer instead of a current buffer.

In practice, the number of ADCs, DACs, clock signals and the respective operating speed of each of the components described above in conjunction with FIGS. **14-19** will depend, for example, on the number of parallel levels of these and other components in the system as well as on the desired operating speed of these components and the data rates of the input and output signals.

FIG. **20** is a block diagram of one embodiment where transceivers implementing the teachings of the invention are used to transmit electrical signals between circuit boards **190** over a backplane **192**. In this embodiment, coded PAM-5 signals are driven over electrical paths **191** in the backplane **192** by electrical interfaces **193**. It should be understood that, in general, the primary difference between the circuit of FIG. **20** and the other circuits described herein is the use of an electrical interface rather than an optical interface (as shown in FIG. **1**). Thus, the embodiment of FIG. **20** may include, for example, parallel precoding and/or other techniques as described and taught herein in accordance with the invention. Typically, the length of the electrical path in this implementation would be limited to a distance of approximately 30 inches.

FIG. **21** is a block diagram of an embodiment where transceivers implementing parallel precoding according to the teachings of the invention are used to transmit electrical sig-

nals between router switches **194** via at least one coaxial or twinaxial cable **196**. This embodiment is similar to the one described in conjunction with FIG. **20** except that the electrical interface (not shown) may be particularly adapted to drive coaxial cable or twinaxial cable. Typically the length of the cable **196** in this implementation with PAM-5 signals operating at 5 GHz would be limited to a distance of approximately 10-15 meters.

FIG. **22** is a block diagram of one embodiment where transceivers **198** implementing precoding according to the teachings of the invention are incorporated into an optical module **200** with DACs **202**, ADCs **204** and optoelectronics **206**. The optoelectronics used for a transceiver typically incorporates a laser photodetector, a laser driver and amplifiers including a trans-impedance amplifier.

The teaching of the invention may be incorporated into a wide variety of implementations. For example, many of the components described herein may or may not be used in a given implementation. One embodiment of a system constructed according to the invention does not use trellis encoding or trellis decoding. In this case, in the transmitter the uncoded digital signals may be input to the parallel Tomlinson precoders. In the receiver the digital output of the forward equalizers may be passed directly to the physical coding sublayer. This embodiment may be used to reduce system cost and/or power dissipation. However, in general, a system without trellis decoding will have a higher bit error rate. In addition, such a system typically would be operated with a channel with higher signal-to-noise ratio (S/N).

Another embodiment of a system constructed according to the invention uses the forward equalizers, but not the transmit equalization. In general, this system typically would be used in relatively low noise environments because noise may be amplified to a greater extent by the forward equalizers. In this case, in the receiver the output of the ADC section may pass directly to the trellis decoder (if trellis coding is used) or, in some embodiments, to other digital signal processing operations.

Another embodiment of a system constructed according to the invention does not use a forward equalizer. In this case, all equalization may be performed in the precoder or in a decision feedback equalizer. Typically this embodiment may be used when the communications system has little or no intersymbol interference.

Another embodiment of a system constructed according to the invention does not use Tomlinson-Harashima precoding. For example, some systems do not provide equalization.

An example of a system that may not incorporate equalization will be described below in conjunction with the simplified block diagram of FIG. **23**. FIG. **23** illustrates, in part, that a variety of processing tasks may be performed by a system designed in accordance with the invention. To this end, a transmitter **210** and a receiver **220** are shown as including one or more processing elements **212** and **224**, respectively. In some embodiments these processing elements may be implemented in parallel.

The processing elements **212** typically comprise circuitry that performs processing functions, for example, a digital signal processor. A transmit-side processing element **212** may comprise, for example, a transmit equalizer such as a pre-emphasis filter, a Tomlinson-Harashima precoder and/or a dynamics limited precoder. In some embodiments, a processing element **212** may comprise, for example, a trellis encoder, a convolutional encoder, or a block encoder.

The receive-side processing elements **224** typically comprise circuitry that performs processing functions, for example, a digital signal processor. A processing element **224** may comprise, for example, a crosstalk canceller, a forward equalizer and/or a decision feedback equalizer. In some embodiments, a processing element **224** may comprise, for example, a trellis decoder, a convolutional code decoder, or a block code decoder. In other embodiments, the processing elements **224** are not incorporated into the design.

In one implementation of the embodiment of FIG. **23**, digital input signals **208** to the transmitter **210** are processed by one or more processing elements **212**. In other embodiments, the processing elements **212** are not incorporated into the design. In the latter case, the transmitter typically would not perform coding or equalization operations.

If a processing element is incorporated into the design, the output of a processing element **212** is eventually sent to a DAC **214** which may be implemented, for example, as described herein. The output of a DAC **214** (or the multiplexed outputs of the DACs **214** in the case of parallel DACs **214**) is sent over a channel via optical or electrical interfaces **216** and **218** to the receiver **220**. One or more ADCs **222** in the receiver **220** convert the analog signal to digital signals, for example, as discussed herein, to perhaps be processed by one or more processing elements **224** and/or one or more symbol-by-symbol decoders **226** to produce digital output signals **228**.

In some embodiments, the processing elements **224** are not incorporated into the design. In this case, the receiver may not perform decoding or equalization operations.

If the symbol-by-symbol decoder **226** is incorporated into the design, it may be implemented as a relatively simple threshold detection device that compares the input signal with threshold levels to determine, for example, the PAM level of the received signal (e.g., −2, −1, 0, 1, 2). The symbol-by-symbol decoder functions may be implemented by a digital signal processor.

In view of the above, it may be seen that the use of precoding may provide several advantages over receiver equalization. A parallel precoder is, in general, easier to implement than a parallel decision feedback equalizer in the receive section. When using trellis coded modulation, precoding simplifies the implementation of the trellis decoder because the trellis decoder does not need to resolve the effects of intersymbol interference. Precoding avoids error propagation, which may be a problem in decision feedback equalizers. Moreover, the techniques described herein provide an asymptotically optimal architecture in that the combination of precoding with coded modulation approaches the Shannon bound for channel capacity when good modulation codes are used.

The illustrative systems described herein may be implemented in a variety of ways. For example the transmitter and receiver sections **50** and **82** typically would be implemented as a CMOS PHY transceiver integrated circuit. This implementation may provide very good performance at a relatively low cost. It should be appreciated, however, that these circuits may be implemented on separate integrated circuits. For example, the transmitter and receiver sections may be implemented on separate chips. The DACs and ADCs may be implemented on chips apart from the other components of the transmitter and receiver. In addition, the transmitter and receiver or some of their components may be implemented using different integrated circuit technology. For example, the DACs and ADCs may be implemented as silicon germanium devices.

The chip interfaces (e.g., buses **28** and **32** in FIG. **1**) may take a variety of different forms. In one embodiment the interfaces between the transmitter **50** and the media access controller **52** (FIG. **2**) and between the receiver **82** and the

media access controller **84** (FIG. **5**) consist of XAUI interfaces. In another embodiment the chip interfaces may comprise X-GMII interfaces. It should be understood, however, that the type of the chip interface will depend on the particular application in which the chip will be used. For example, different interfaces may be specified for different data rates, different bus architectures and so forth.

As described above, the teaching of the invention can be applied to both optical and non-optical channels (e.g., electrical and wireless channels). Optical channels include, for example, single mode fiber and multimode fiber. In particular the embodiment described in conjunction with FIGS. **1-6** can operate over existing multimode fiber installations up to distances of at least 300 meters. The system can operate with single channel optoelectronics. That is, a single laser and a single photodetector. Significantly, the invention provides an especially attractive system for transmitting high speed data over multimode fiber because these equalization techniques effectively compensate for the bandwidth limitations of this type of fiber.

The parallel processing techniques according to the invention may be implemented in many different ways as well. For example, the number of parallel convolutional encoder/decoders, block encoders/decoders, trellis encoders/decoders, Tomlinson-Harashima precoders, DACs, ADCs, forward equalizers, digital Signal processor elements and symbol-by-symbol decoders used in a given implementation will depend on system design requirements. Similarly the speed at which these circuits operate will depend on the number of parallel levels and the speed of the transceiver input and output signals. In general, typical design requirements include the speed of the input signal, the speed of the integrated circuit technology, the maximum power dissipation and the desired cost of the integrated circuit.

In many embodiments the main processing elements treated herein such as the parallel convolutional encoder/decoders, block encoders/decoders, pre-emphasis filters, decision feedback equalizers, trellis encoders/decoders, Tomlinson-Harashima precoders, forward equalizers, digital signal processor elements and symbol-by-symbol decoders may be implemented as separate digital signal processor elements on an integrated circuit. Depending on system design requirements, as discussed herein a system constructed according to the invention may incorporate parallel implementations of some or all of the these digital signal processors.

The invention may be practiced with different data modulation schemes. Including, for example, any level of PAM coding (e.g., PAM-3, PAM-7).

A variety of components may be used to implement the electrical-optical interfaces (e.g., optical interfaces **40** and **42** in FIG. **1**). These interfaces may include lasers and photodetectors and other types of optical transmitters and optical receivers.

Also, the invention may be practiced with a wide variety of encoding and decoding schemes. Including different trellis encoding schemes and convolutional encoding and block encoding.

In summary, the invention described herein provides an effective communications system using equalization precoding. While certain exemplary embodiments have been described in detail and shown in the accompanying drawings, it is to be understood that such embodiments are merely illustrative of and not restrictive of the broad invention. It will thus be recognized that various modifications may be made to the illustrated and other embodiments of the invention described above, without departing from the broad inventive scope thereof In view of the above it will be understood that the invention is not limited to the particular embodiments or arrangements disclosed, but is rather intended to cover any changes, adaptations or modifications which are within the scope and spirit of the invention as defined by the appended claims.

What is claimed is:

1. A receiver comprising:

a plurality of parallel analog-to-digital converters operable to convert an analog signal into a plurality of digital data streams;

a plurality of parallel forward equalizers, each coupled to an output of one of the analog-to-digital converters to receive a digital data stream; and

a plurality of parallel trellis decoders, each coupled to an output of one of the forward equalizers and operable to produce a decoded data stream, wherein the plurality of parallel trellis decoders are interleaved with respect to each other, wherein the plurality of trellis decoders comprises m trellis decoders operable to receive a block of n samples, and wherein a first of the plurality of trellis decoders processes the first n/m samples, a second of the plurality of trellis decoders processes the second n/m samples, and the mth trellis decoder processes the last n/m samples of the block of samples, wherein m and n are positive integers.

2. The receiver of claim **1** wherein each of the forward equalizers are operable to provide phase equalization of the received digital data stream to produce an equalized digital data stream.

3. The receiver of claim **1** wherein the plurality of parallel analog-to-digital converters are interleaved with respect to each other.

4. The receiver of claim **3** wherein each analog-to-digital converter is driven by a unique phase of a clock signal, so that each analog-to-digital converter samples a different symbol in the received analog signal.

5. The receiver of claim **1** further comprising an optical interface operable to receive an optical communication signal, convert the optical communication signal to an analog electrical signal, and provide the analog electrical signal to the plurality of parallel analog-to-digital converters.

6. The receiver of claim **1** wherein the plurality of parallel trellis decoders comprises a plurality of Viterbi decoders.

* * * * *