UNITED STATES PATENT AND TRADEMARK OFFICE

BEFORE THE PATENT TRIAL AND APPEAL BOARD

NOKIA OF AMERICA CORPORATION,
Petitioner,

v.

ALEXANDER SOTO AND WALTER SOTO,
Patent Owners.

IPR2023-00682
Patent No. 10,771,181

PATENT OWNERS' PRELIMINARY RESPONSE

Table of Contents

I. Introduction 1

II. Summary of the Prior Art 3

A. Patent 6,879,640 to Agazzi ("Agazzi '640") 3

B. Patent 7,933,341 to Agazzi ("Agazzi '341") 6

C. Secondary Reference Patent 6,879,640 to Wei ("Wei") 9

III. Institution Should Be Denied Because the References Lack Claimed Elements 9

A. Ground I: Agazzi '640 and Wei 9

1. Independent Claim 1: Missing Element 1.I, "*an equalizer for performing equalization on the second m-ary modulation signal to remove noise*" 9

2. Independent Claim 22 18

3. All Claims Depending From Claims 1: Claims 2, 3, 5, 6, 8, 10-14, 17 18

4. The Petition Fails to Propose a *Prima Facie* Combination 19

B. Ground II: Agazzi '640, Wei, and Agazzi '341 20

1. Dependent Claims 15 and 16 20

2. Independent Claim 23 21

C. Ground III: Agazzi '341 and Wei 21

1. Independent Claim 1: Missing Element 1.J, "an m-ary demodulator" in the receiver 21

2. Independent Claims 22 and 23 27

3. All Claims Depending From Claims 1: Claims 2-3, 8, and 10-17 27

4. The Petition Fails to Articulate a *Prima Facie* Combination 28

D. Ground IV: Agazzi '341, Wei, and Agazzi '640 29

1. Dependent Claims 5 and 6 29

IV. Prosecution History Involves Repeated Examination of an Electrical Reference Combined with a Form Factor Reference 30

A. App. 11/772,187 (Pat. 7,242,868) File History 30

B. App. 12/512,968 (Patent 9,337,948) File History 30

C. App. 15/095,137 (Patent 9,887,795) File History 31

D. App. 15/884,351 (Patent 10,263,723) File History 32

E. App. 16/297,610 ('181 Patent) File History 32

F. The Board Denied Institution of Previous IPR Petitions..... 33

G. Summary of Related Family and Considered Combinations 36

V. The Board Should Use Its Discretion to Deny Institution Under Section 325(d) 39

A. *Becton, Dickinson* Factors (a)-(d) Support Denial Because the Petition Reargues the Extensively-Examined Combination of an Electrical Reference With a Form Factor Reference 40

1. The Board Already Declined to Institute an IPR Petition Based On an Agazzi Plus Form Factor Reference Argument 42

2. Petitioner's Agazzi '341 Reference is Cumulative of the Examined Agazzi '997 Reference 43

3. The USPTO Already Considered Chip-Based References Like Agazzi '640 and Agazzi '341 44

4. The Wei Reference is Similar to References Already Examined for Form Factors 47

B. *Becton, Dickinson* Factor (e) Supports Denial Because The USPTO Made No Errors During Prosecution or IPR 48

1. The USPTO Knew About Pluggable Form Factors 48

2. The USPTO Considered Multiple References With Integrated Optoelectronics 49

3. The USPTO Considered Pluggable Form Factors with "Stacked" PCBs 51

C. *Beckton, Dickinson* Factor (f) Weighs Against Institution Because The Petition Has No New Evidence or Facts Warranting Reconsideration 52

D. Conclusion: Institution Should Be Denied Under *Advanced Bionics* 52

VI. The Board Should Deny Institution Under *Fintiv* 53

VII. Conclusion: The Board Should Deny the Petition 60

Table of Authorities

Cases

Advanced Bionics, LLC v. Med-El Elektromedizinische Geräte GmbH,
IPR2019-01469, Paper 6 (PTAB Feb. 6, 2020) 39, 40, 52

Apple Inc. v. Fintiv, Inc.,
IPR2020-00019, Paper 11 (PTAB Mar. 20, 2020)..... passim

Becton, Dickinson & Co. v. B. Braun Melsungen AG,
IPR2017-01586, Paper 8 (PTAB Dec. 15, 2017)..... passim

Dish Network v. Broadband iTV,
IPR2020-01280, Paper 17 (PTAB Feb. 4, 2021) 54

Ericsson Inc. v. Godo Kaisha IP Bridge 1,
IPR2022-00726, Paper 11 (PTAB. Nov. 2, 2022) 56

II-VI, Inc. v. Alexander Soto,
IPR2021-01358, Paper 10 (PTAB Feb. 15, 2022) 37, 38

II-VI, Inc. v. Alexander Soto,
IPR2021-01359, Paper 10 (PTAB Feb. 15, 2022) 37, 38

II-VI, Inc. v. Alexander Soto,
IPR2021-01361, Paper 1 (PTAB Aug. 6, 2021) 33, 51

II-VI, Inc. v. Alexander Soto,
IPR2021-01361, Paper 10 (PTAB. Feb. 15, 2022) ..... passim

Infinera Corp. v. Alexander Soto,
IPR2023-00834, Paper 2 (PTAB Apr. 14, 2023) 39

Infinera Corp. v. Alexander Soto,
IPR2023-00835, Paper 2 (PTAB Apr. 14, 2023) 39

Infinera Corp. v. Alexander Soto,
IPR2023-00838, Paper 2 (PTAB Apr. 14, 2023) 39

KSR Int'l Co. v. Teleflex Inc.,
550 U.S. 398 (2007) 19, 28

Nokia of Am. Corp. v. Alexander Soto,
IPR2023-00680, Paper 1 (PTAB Mar. 15, 2023)..... 38

Nokia of Am. Corp. v. Alexander Soto,
IPR2023-00681, Paper 1 (PTAB Mar. 15, 2023)..... 38

Nokia of Am. Corp. v. Alexander Soto,
IPR2023-00682, Paper 1 (PTAB Mar. 15, 2023)..... 38

Nokia of America Corp. v. Alexander I. Soto and Walter G. Soto, IPR2023-00960, Paper 2 (PTAB June 30, 2023) 59

Sotera Wireless, Inc. v. Masimo Corp., IPR2020-01019, Paper 12 (PTAB Dec. 1, 2020) 56

Spectrum Solutions LLC v. Longhorn Vaccines & Diagnostics, LLC, IPR2021-00847, Paper 107 (PTAB May 3, 2023) 59

Statutes

35 U.S.C. § 103 ..... 19, 28

35 U.S.C. § 315 ..... 14, 57

35 U.S.C. § 325(d) 33, 39, 46, 60

37 C.F.R. § 1.56 60

MPEP § 2001 ..... passim

MPEP § 2112 11

MPEP § 2143 ..... 19, 28

Patent Owner's Exhibit List

Exhibit	Description
2001	Public file history of application 11/772,187
2002	Public file history of application 12/512,968
2003	U.S. Pub. No. 2007/0031153 to Aronson et al.
2004	U.S. Pub. No. 2002/0181895 to Gilliland et al.
2005	U.S. Pub. No. 2001/0035997 to Agazzi ("Agazzi '997")
2006	Comparison of Excerpted Figures from Agazzi '997 (Ex. 2005) and Agazzi '341 (Ex. 1009)
2007	Email chain between Patent Owners' counsel and Petitioner's counsel regarding real party-in-interest discovery

I. Introduction

The Board should decline to institute the Petition because it lacks merit, and merely rehashes the same type of arguments previously rejected by both the patent examiner and the Board.

Alexander and Walter Soto invented a novel pluggable m-ary optical transceiver. The challenged Patent 10,771,181 ("'181 Patent") discloses and claims an optical transceiver module that includes extensive signal processing functionality packaged into a portable pluggable form factor that fits in a person's hand. The '181 Patent addresses deficiencies in optical transceivers at the time of the invention. Existing optical transceivers with complex signal processing capabilities were large, bulky, and expensive. For example, the extensively-examined Brede reference[1] describes a headend system made up of multiple bulky components on line cards mounted on racks. In the industry, line cards are often referred to as "pizza boxes" because of their shape and size, and multiple line cards are installed into even larger racks or chassis that could take multiple people to lift and move. The inventors worked to determine the important features that should be included in a pluggable optical transceiver module while also balancing other factors such as power, heat, and size. The result was a novel and nonobvious pluggable module with m-ary signal processing capabilities as claimed in the '181 Patent.

[1] *See* Section IV(G), below (discussing references considered).

From the earliest examination in 2004 to allowance in 2020, multiple examiners searched for a pluggable optical transceiver with complex m-ary signal processing capabilities like those in the claims. *E.g.*, Ex. 2001 at 9–14 (Examiner Phan searching similar claims); Ex. 2002 at 116–21 (Examiner Bello searching similar claims). They found none. The USPTO repeatedly considered combinations of one reference describing a traditional line card or optical system (*e.g.*, Brede) with a second reference describing a simple pluggable module (such as the small form pluggable "SFP" module). The inventors showed the examiners that such a combination was not obvious, and the examiners recognized the patentability of the claims over such arguments. In a previous IPR petition, the Board rejected similar grounds that asserted combinations of references describing traditional m-ary optical systems with other references that purported to disclose simple pluggable modules.

Nokia of America Corporation ("Petitioner") follows the same approach that the examiners previously rejected and the Board previously rejected. Petitioner does not assert that anyone else invented a pluggable optical transceiver with m-ary modulation capabilities like the one claimed in the '181 Patent. Petitioner presents no references that purportedly anticipate any of the claims of the '181 Patent. Instead, Petitioner brings the same type of obviousness grounds the examiner and Board previously rejected. The Board should reject these repetitive arguments again.

Besides being repetitive, the Petition should also be rejected for failure on the

merits. Grounds I and II should fail because the Petition, at a minimum, fails to demonstrate disclosure of the "an equalizer for performing equalization on the second m-ary modulation signal to remove noise" limitation in Patent 6,879,640 to Agazzi. Grounds III and IV should fail because the Petition fails to demonstrate the disclosure of "an m-ary demodulator" in the receiver portion of Patent 7,933,341 to Agazzi.

II. Summary of the Prior Art

A. Patent 6,879,640 to Agazzi ("Agazzi '640")

Agazzi '640 describes a traditional fiber optic data transmission system. Ex. 1005. Agazzi '640 makes no mention of pluggable modules, and Petitioner does not rely on this reference for disclosure of pluggable modules. Petitioner relies on Agazzi '640 for the transmitter of Fig. 10 as implementing the QAM modulator of Fig. 2B and for the receiver of Fig. 12, disregarding the remaining functionality described in Agazzi '640. Paper 1 ("Petition") at 15–27. This section summarizes the relied-upon transmitter and receiver.

The Agazzi '640 transmitter of Figure 10 modifies the transmitter of Figure 2A to add trellis encoding. Ex. 1005 at 12:5-9. The transmitter of Fig. 10 shows an XGM II interface receiving 64 parallel input bit signals B0-B63. *Id.* at Fig. 10, 8:36-44. These signals are divided into sixteen, 4-bit groups called "nibbles" that are processed by sixteen parallel convolution coders that each output a 5-bit signal. *Id.*

at 8:66-9:3, 12:5-9, Fig. 10. These sixteen parallel 5-bit signals are then modulated by sixteen parallel QAM-32 modulators, the details of which are shown in Fig. 2B. *Id.* at 12:7-11. The outputs of the QAM-32 modulators are then mixed with sixteen parallel mixers of different frequencies, filtered by sixteen parallel band pass filters, and then summed together at the **Σ** block before being sent to the laser driver. *Id.* at 9:3-31, Fig. 10.

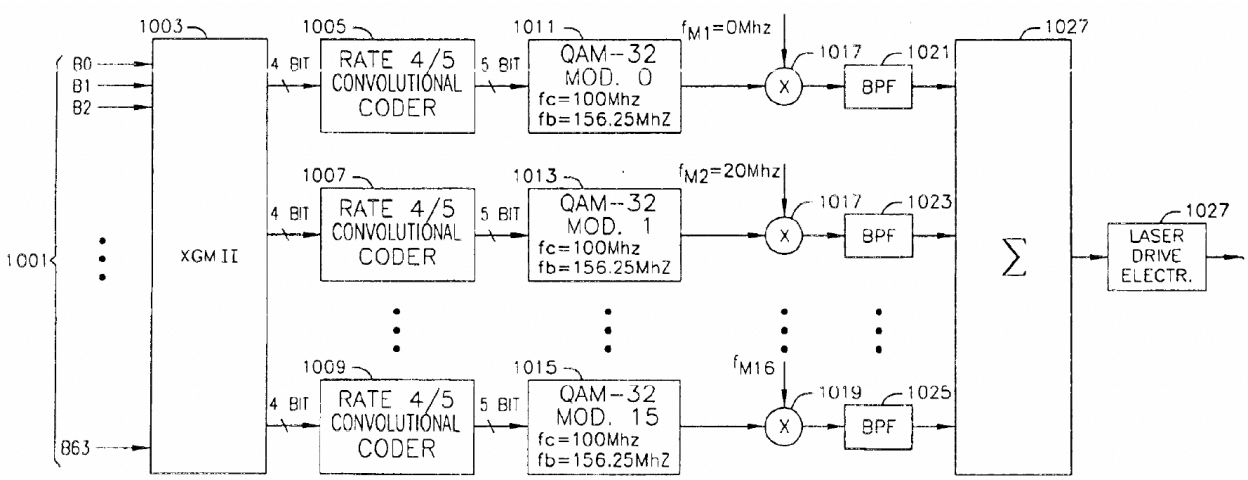

FIG.10

Figure 2B details QAM-16 modulator blocks, similar to the QAM-32 blocks from Figure 10. *Id.* at 9:42-43, 12:5-6. The modulation occurs from the QAM-16 constellation mapping 229 up through mixing the I and Q signals with a sinusoidal carrier at the two mixers, explicitly shown using the traditional symbol ⊗.

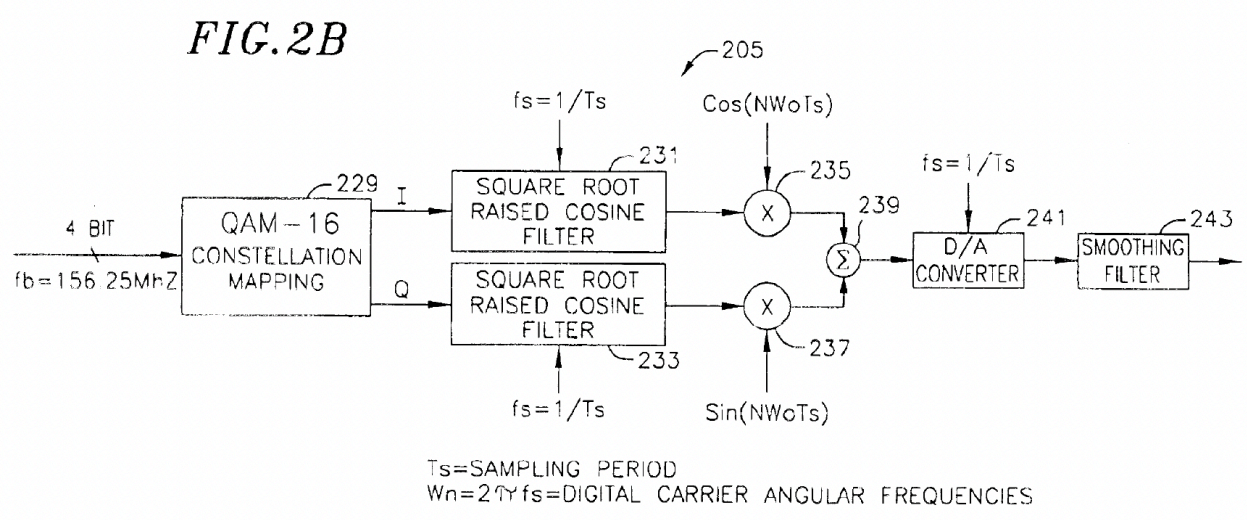

Id. at Fig. 2B. Figure 2B is part of the transmitter and shows a "digital implementation" using a "DSP based implementation" to perform digital processing left of the digital-to-analog ("D/A") converter. *Id.* at 9:42-54. Agazzi '640 refers to performing "DSP-based equalization techniques" in the DSP of the transmitter. *Id.* at 4:5-6.

At the receiver shown in Figure 12, a photodetector receives and amplifies a signal. *Id.* at Fig. 12. The signal is processed using sixteen parallel pathways, each of which begins by shifting the signal by a different frequency using a mixer. In each of the sixteen parallel pathways, the signal is then filtered through a low pass filter (LPF) to select the shifted frequency range, demodulated by each of sixteen parallel demodulators explicitly labeled as "QAM-32 DEMOD" blocks, decoded using sixteen parallel trellis decoders into 4-bit nibbles, and then output as a 64-bit signal through the XGM II interface. *Id.* at 10:14-57, 15:56-65. There is no block labeled

"equalizer" in either the receiver of Figure 12 or in the receiver of Figure 3 that Figure 12 modifies. *Id.* at Figs. 3, 12. The specification does not mention an "equalizer," "equalization," or any variation thereof in the descriptions of Figures 3 and 12. *Id.* at 10:14-57, 15:56-65.

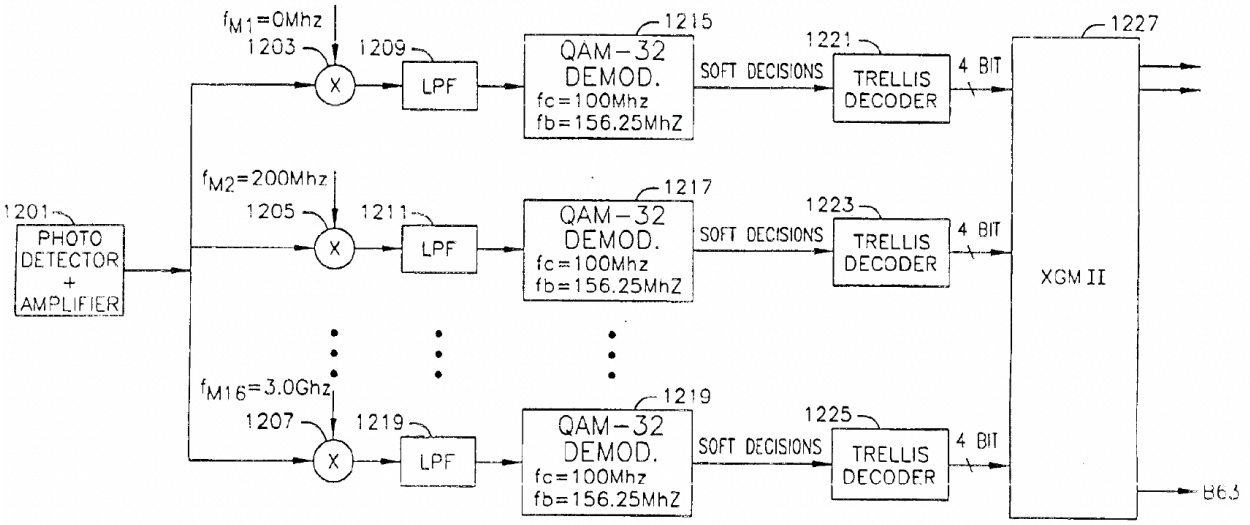

FIG. 12

B. Patent 7,933,341 to Agazzi ("Agazzi '341")

Agazzi '341 is a continuation-in-part of parent patent publication 2001/0035997 to Agazzi ("Agazzi '997"), which the USPTO already considered during examination of the earlier related application 11/772,187. Ex. 2001 at 33 (citing Agazzi '997 in IDS); *see* Section V(A)(2) below (explaining cumulative disclosure).

Agazzi '341 describes a traditional fiber optic data transmission system. It makes no mention of pluggable modules and Petitioner does not rely on this

reference for disclosure of pluggable modules. Petitioner relies on Agazzi '341 for the transmitter of Fig. 2 and the receiver of Fig. 5, ignoring the remaining functionality disclosed in Agazzi '341. Petition at 45–56. This section summarizes the relied-upon transmitter and receiver.

The transmitter of Fig. 2 includes a system interface, a physical coding sublayer (PCS) that includes multiple parallel trellis encoders, multiple parallel Tomlinson-Harishima precoders, multiple parallel digital to analog converters (DACs), and a laser circuit.

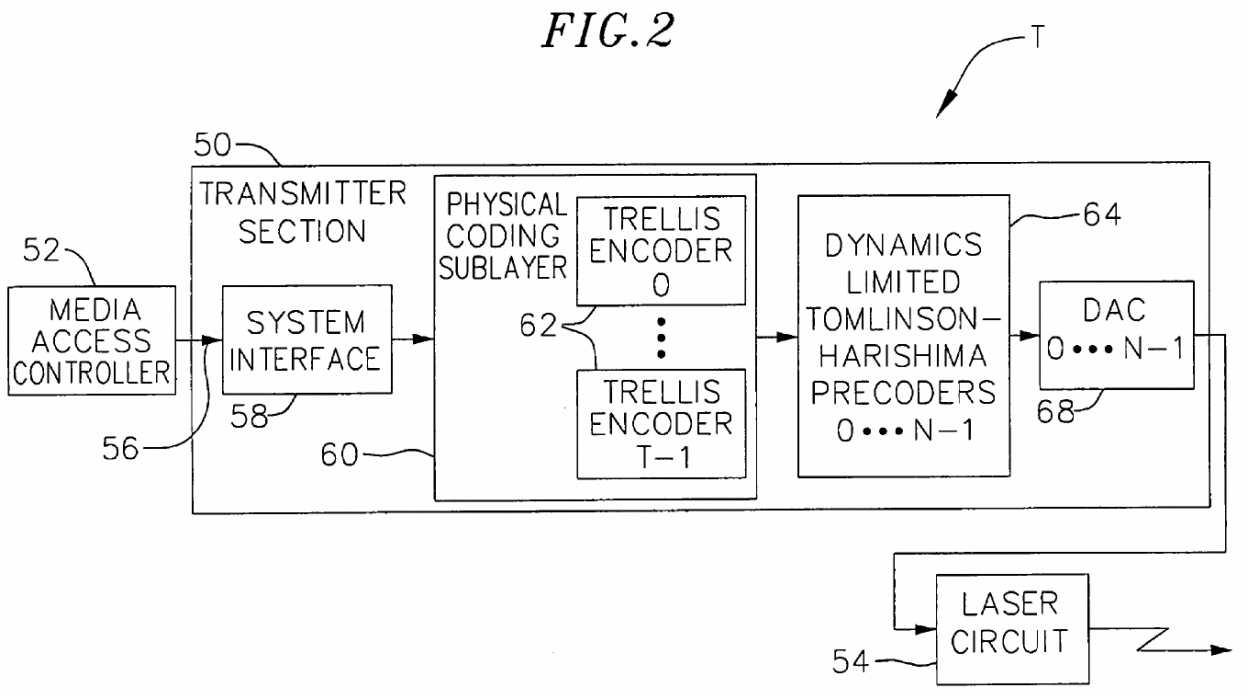

Ex. 1009 at Fig. 2.

At the receiver, a photodetector receives a laser signal and generates an analog signal. *Id.* at Fig. 5. That analog signal is amplified by a preamplifier, filtered through

a high pass filter, and provided to a programmable gain amplifier. *Id.* Then, the analog signal is converted to a digital signal by 16 parallel analog to digital converters (ADCs), processed by a retiming circuit, and processed by 16 parallel forward equalizers. *Id.* Each of the equalizers is explicitly labeled in the block "Forward Equalizer (16-parallel)." *Id.* Then, the signals are processed by 4-way interleaved 4-dimensional trellis decoders, passed to another physical coding sublayer (PCS), and finally sent through a system interface to exit. *Id.*

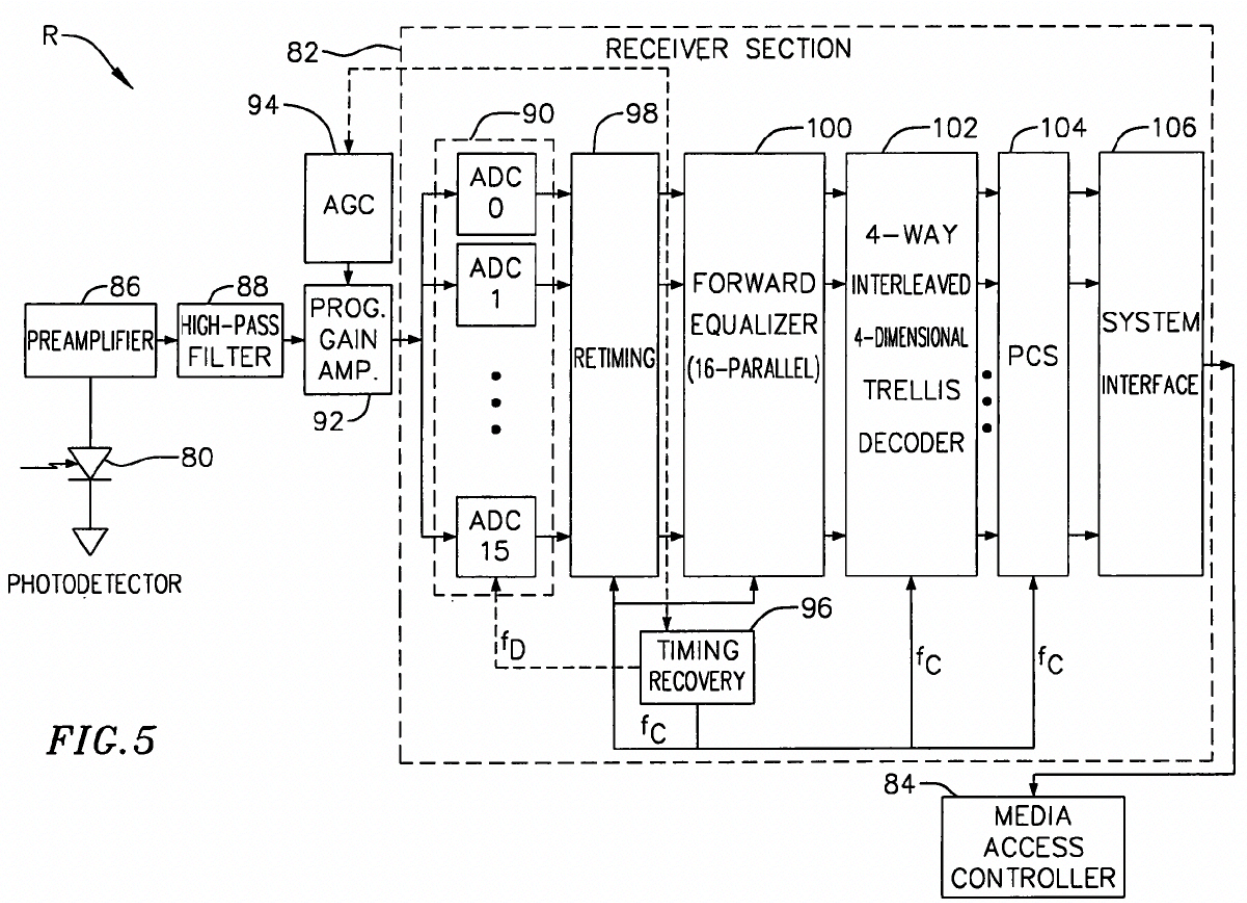

FIG. 5

Id. at Fig. 5. Figure 5 does not show any "demodulator" or use the mixer symbol, and neither the specification nor figures contain the words "demodulation,"

"demodulate," or "demodulator." *Id.* at 6:40-7:55, Fig. 5.

C. Secondary Reference Patent 6,879,640 to Wei ("Wei")

The Petition relies on Wei merely for teaching a basic fiber optical transceiver module in an SFP package, a type of pluggable module. Petition at 10, 14. According to the Petition, Wei's key teaching is "vertically stacked receiver and transmitter printed circuit boards." Petition at 10, 69. Wei's disclosure lacks any of the complex signal processing, such as m-ary modulation and equalization, required by the '181 patent, and the Petition does not rely on Wei for any such disclosures.

III. Institution Should Be Denied Because the References Lack Claimed Elements

The Board should deny institution because the Petition fails to identify critical claim elements in each ground and thus has not established a reasonable likelihood of prevailing on the merits. Additionally, the Petition fails to articulate a specific modification of the primary references and fails to show the resulting device that is allegedly obvious.

A. Ground I: Agazzi '640 and Wei

1. Independent Claim 1: Missing Element 1.I, "*an equalizer for performing equalization on the second m-ary modulation signal to remove noise*"

While Agazzi '640 fails to teach many elements, this Preliminary Response focuses on only element 1.I: "***an equalizer*** for performing equalization on the second m-ary modulation signal to remove noise." (emphasis added). The Petition relies

exclusively on Agazzi ’640 for disclosing this element. The Petition, however, fails to identify an equalizer in Agazzi ’640.

In context, element 1.I claims an equalizer in the “receiver” portion of the claimed pluggable optical transceiver. The Petition relies on Agazzi ’640’s Figure 12 for disclosure of the receiver limitations of claim 1. Petition at 22–27. The Petition argues that the equalizer claimed in element 1.I is located somewhere in the following red box:

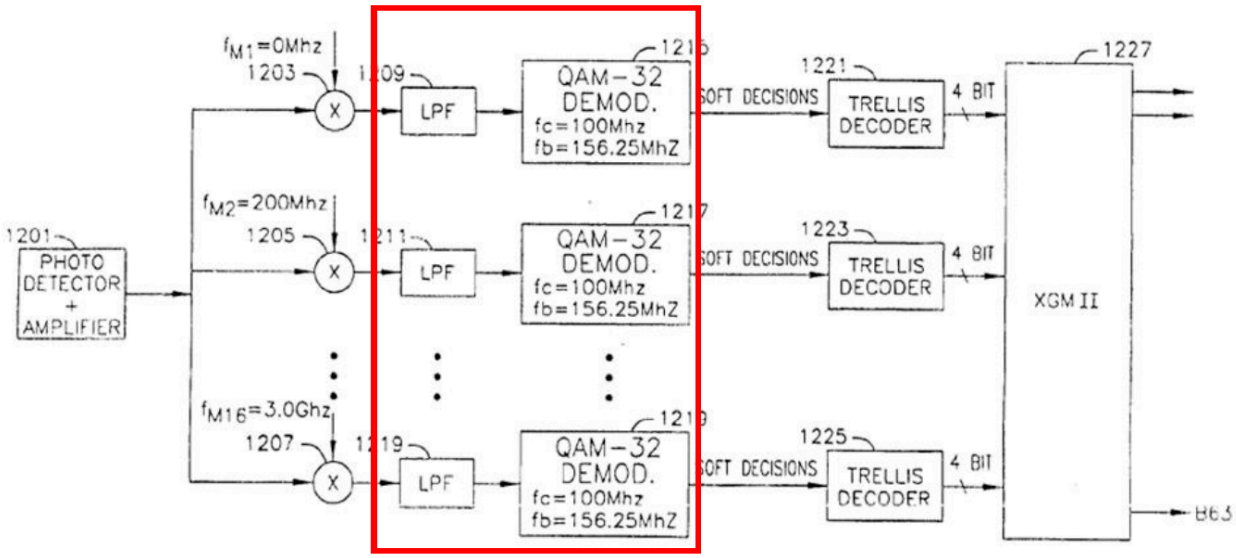

FIG. 12

Petition at 26. The red box encompasses the Low Pass Filter (LPF) and QAM demodulators blocks. Petitioner also argues that the “second m-ary modulation signal” required by the preceding claim element 1.H is produced ***somewhere*** (unspecified where) in the QAM-32 DEMOD block 1215 in the red box (*id.* at 24–25) and this box also discloses clock and data recovery circuit (*id.* at 24–25).

The Petition cannot demonstrate a reasonable likelihood of success for three reasons: a) the relied-upon portion of Agazzi ’640 does not explicitly include an equalizer, b) the Petition does not establish that an equalizer is inherently in the red box of the receiver, and c) none of the other cited parts of Agazzi ’640 explicitly or inherently teach the claimed equalizer.

a. The Red Box Does Not Explicitly Include an Equalizer

The blocks in the red box do not include an equalizer, and the corresponding descriptions of the elements in the red box also do not mention an equalizer. Ex. 1005 at 15:56–65. Figure 12 is based on Figure 3, but the description of Figure 3 also contains no mention of an equalizer. *Id.* at 10:14-57. Neither the Petition nor Dr. Prucnal can identify where the equalizer is within the red box. Thus, there is no equalizer explicitly taught in the Agazzi ’640 receiver.

b. No Equalizer is Inherent in the Red Box

The Petition recognizes the lack of an explicit teaching of an equalizer and thus resorts to inherency: “A POSITA would have understood the equalizer was necessarily present within the boxed area to compensate for distortion. . . . even if it was not explicitly illustrated in a block diagram of the receiver.” Petition at 25–26.

The law sets a high bar when arguing that an element is “inherently” or “necessarily” present. “[I]nherent disclosure of a prior art reference may be relied upon in the rejection.” MPEP § 2112. However, “[t]he fact that a certain result or

characteristic may occur in the prior art is not sufficient to establish the inherency of that result or characteristic." MPEP § 2112(IV) (emphasis original). "[I]n order to rely on inherency to establish the existence of a claim limitation in the prior art in an obviousness analysis – the limitation at issue ***necessarily must be present***, or the natural result of the combination of elements ***explicitly*** disclosed by the prior art." *Id.* (emphasis added).

There are three reasons why an equalizer is not inherent in the receiver. First, Mr. Agazzi explicitly rebuts this argument in Agazzi '341. Second, any equalization in Agazzi '640 happens in the transmitter, not the receiver. Third, even if proper, Petitioner fails to demonstrate that its additional references ***necessarily*** disclose use of an equalizer rather than a mere possibility.

First, Agazzi '341 (the other primary reference cited by Petitioner for an optical transmitter with an equalizer) explicitly states multiple times that any equalizer is optional, not inherent or necessary, in optical transceivers:

> Another embodiment of a system constructed according to the invention does not use Tomlinson-Harashima precoding. ***For example, some systems do not provide equalization.***
> ***An example of a system that may not incorporate equalization*** will be described below…

Ex. 1009, 13:45-49 (emphasis added); *see also id.* at 13:45-47 ("Another embodiment of a system constructed according to the invention ***does not use a***

forward equalizer." (emphasis added)), 14:25-27 ("In some embodiments, the processing elements 224 are not incorporated into the design. In this case, ***the receiver may not perform decoding or equalization operations***." (emphasis added)). Thus, the Petition's argument that equalization ***may be*** "desirable" (Petition at 25-26) does not establish that equalization is ***necessarily*** disclosed as required by the inherency doctrine.

Second, Petitioner's inherency argument should fail because it has not cited evidence of an equalizer in the ***receiver*** section, as required by Element 1.I. The Petition argues that Agazzi '640's reference to "DSP-based equalization techniques" (Petition at 25, citing Ex. 1005 at 4:5-8) inherently discloses an equalizer in the red box drawn on Figure 12 of Agazzi '640 by Petitioner. Petitioner has not, however, established that either the LPF or QAM-32 demodulator blocks in the receiver are a "DSP" (digital signal processor) capable of implementing DSP-based equalization techniques. Indeed, the LPF's are analog circuits, not digital. Instead, the ***transmitter*** is expressly described as using a "DSP based implementation." Ex. 1005 at 9:42-54 ("FIG. 2B is a block diagram of a digital implementation . . . . DSP based implementation"). Thus, it is the DSP in the transmitter, not the receiver, that implements any DSP-based equalization. Petitioner has not explained how its cited statement (Ex. 1005 at 4:5-8) refers to Petitioner's red box over the receiver when the specification also teaches that the DSP is in the transmitter, not the receiver. And,

even if Petitioner did demonstrate the use of a "DSP" in the receiver, it has not shown that the equalizer would be situated such that equalization would be performed on "the second m-ary modulation signal" as opposed to "amplified electrical analog signal" (Element 1.H) or at any other place in Agazzi's '640's receiver. Again, the mere possibility of an equalizer is not sufficient to establish inherency.

Third, the other printed publications cited in the Petition—the Ramaswami textbook and a Broadcom presentation—do not support inherency. Petitioner attempts to unfairly circumvent the statutory estoppel provision of 35 U.S.C. § 315 by improperly using these references without including them in the grounds.[2] *See* Petition at 26 (citing Ex. 1016, Ex. 1033). The Board should disregard this improper evidence.

Even if the Board considers the improper Ramaswami textbook, it adds nothing to Petitioner's argument. At best, the textbook describes how an "equalization filter" might cancel out the effects of intersymbol interference using a "transversal filter" of Fig. 4.12 below:

[2] *See* Section VI below discussing Petitioner's "empty promise" not to use the "specific" references relied on in the grounds of the Petition.

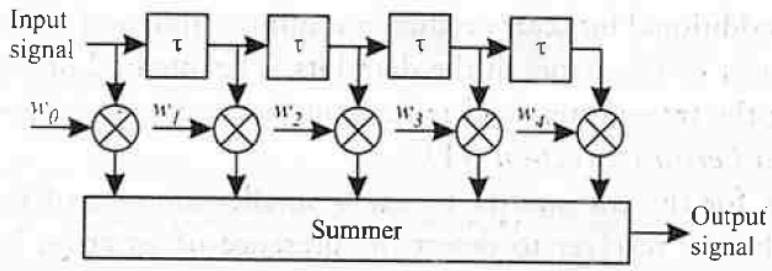

Figure 4.12 A transversal filter, a commonly used structure for equalization. The output (equalized) signal is obtained by adding together suitably delayed versions of the input signal, with appropriate weights.

Ex. 1016 at 266–67. But Figure 12 from Agazzi '640 does not include this transversal filter. The Petition does not otherwise explain why Agazzi '640 necessarily discloses use of a transversal filter (no such filter is disclosed in the Petitioner's red box). And, even if the low pass filters in Petitioner's red box were also transversal filters, a fact not established by the Petition, the LPFs in Figure 12 are irrelevant because they precede the QAM-32 block that allegedly generates the claimed "second m-ary modulation signal" and thus cannot equalize this later signal. Thus, nothing from the Ramaswami textbook supports Petitioner's argument that "the equalizer was necessarily present" in the Agazzi '640 receiver.

The Broadcom presentation titled "Gigabit Ethernet" (Ex. 1033) has even more problems. The Board should disregard this reference entirely because Petitioner offers no evidence that Broadcom made it publicly available before the priority date. The Petition makes no attempt to qualify it as prior art. Petition at 8–9, 26. Even if it were prior art, Petitioner argues that the presentation "illustrates that

an equalizer was present in a QAM receiver before the decoder." Petition at 26. Petitioner cites no evidence for the assertion that the Broadcom presentation has any relationship to Agazzi '640, let alone that it describes any inherently necessarily structure of all QAM receivers. If anything, this presentation contradicts Petitioner's argument that an equalizer is necessarily disclosed by referring to a QAM-32 decoder. The presentation refers to the "Feed-Forward Equalizer" as separate from the "QAM Decoder," not as inherently within the QAM decoder. Ex. 1033 at 2.

In conclusion, the Petition at most establishes that an equalizer ***may*** be used in Agazzi '640. The Petition, however, does not establish that an equalizer is ***necessarily*** disclosed as required in Element 1.I.

c. Other Citations to Agazzi '640 Have No Relevance

Finally, the Petitioner directs the Board to two irrelevant passages from Agazzi '640 that mention the word "equalization" in other contexts. Petition at 25–26 (citing Ex. 1005 at 3:21–26, 4:55–59). Petitioner fails to establish, however, how either of these passages are relevant here. Both passages describe background problems and/or alternative embodiments that Petitioner does not rely on (likely because these other embodiments are missing other elements). Patent Owners address each cited passage (Agazzi '640 at 3:21–26, 4:55–59) in turn.

First, reliance on Agazzi '640 at 3:21–26 is misplaced because this passage describes prior art, not Figure 12 or the red box Petitioner asserts discloses the

claimed equalizer. The cited paragraph discusses how prior art "[b]andwidth efficient communication systems have been developed over several decades in the context of narrowband communications, such as voiceband modems and digital subscriber loops." Ex. 1005 at 3:12–15. It is "[t]hese systems," referring to the voiceband modems and digital subscriber loops (not Figure 12), that "make use of techniques such as … QAM." *Id.* at 3:15–17. It is again these bandwidth efficient communication systems such as voiceband modems and digital subscriber loops (not Figure 12) that sought "[t]o make the most efficient use possible of the available channel bandwidth, [where] channel equalization techniques may also be used." *Id.* at 3:21–23. This part of Agazzi '640 has nothing to do with the receiver of Figure 12, Petitioner's red box, or the claimed equalizer.

Finally, Agazzi '640 at 4:55–59 states, "The present disclosure also describes modulation, equalization," and other concepts. However, this sentence does not say there is an equalizer in the receiver of Figure 12, let alone in Petitioner's red box. Instead, Agazzi only briefly describes DSP-based equalization solely in the transmitter as explained in Section III(A)(1)(b) above. Ex. 1005 at 4:5–8 (mentioning "DSP-based equalization" in context separate from Figure 12), 9:42–54 (describing DSP implementation of Square Root Raised Cosine Filters in Fig. 2B).

For these reasons, the Board should disregard Petitioner's citations to

irrelevant parts of Agazzi ’640 that merely mention the word “equalization” in irrelevant contexts.

* * *

In conclusion, Petitioner has not shown a reasonable expectation of success because Agazzi ’640 does not expressly disclose an equalizer, and Petitioner cannot meet the high burden of demonstrating inherency requiring that Petitioner establish that an equalizer is ***necessarily*** disclosed in Petitioner’s red box drawn on Figure 12.

2. Independent Claim 22

Independent claim 22 includes element 22.I, which reads, “an equalizer for performing equalization on the second m-ary modulation signal to remove noise.” This element is similar to claim element 1.I. In the discussion of this element, Petitioner refers to its argument for claim 1.I. Petition at 34–35. For the same reasons discussed above for claim 1, Petitioner has not shown a likelihood of success, and the Petition should be denied.

3. All Claims Depending From Claims 1: Claims 2, 3, 5, 6, 8, 10-14, 17

Claims 2, 3, 5, 6, 8, 10-14, and 17 depend from claim 1. None of Petitioner’s arguments regarding these claims cures the deficiencies regarding claim 1. Because the Petition fails to demonstrate a reasonable likelihood that claim 1 is obvious at least for the reasons discussed above, the Petition similarly fails to demonstrate a reasonable likelihood of success regarding these dependent claims.

4. The Petition Fails to Propose a *Prima Facie* Combination

The Petition fails to make a *prima facie* obviousness argument because the Petition never describes a modification or a final product that results from a combination. Although the Petition argues for motivations to combine on pages 10–14, the Petition never actually describes any specific combination that a POSITA would be allegedly motivated to make. The Petition only vaguely refers to a combination without concretely describing how a POSITA would modify the primary reference or what the final combination actually is. "The Supreme Court in *KSR* noted that the analysis supporting a rejection under 35 U.S.C. § 103 should be made explicit." MPEP § 2143 (citing *KSR Int'l Co. v. Teleflex Inc.*, 550 U.S. 398, 415–21 (2007)). The Petitioner must describe what the resulting combination ***actually is*** before arguing that the result is predictable or successful.

As best understood, the Petition interprets Agazzi '640 as teaching "receivers and transmitters integrated on a single integrated circuit" that are "on a single chip." Petition at 11. Wei allegedly teaches "vertically stacking the transmitter and receiver ***printed circuit boards***." Petition at 11 (emphasis added). But if the Petition interprets the receiver and transmitter of Agazzi '640 as integrated as a single IC on a single chip, then there are no PCBs to stack according to the teaching of Wei. Alternatively, if Petitioner is proposing that a POSITA somehow take "a single integrated circuit … on a single chip" from Agazzi '640, cut it in half, and stack it on top of itself,

Petitioner has no explanation of how a POSITA could cut an IC and stack it on itself. Petition at 11. It is unclear what Petitioner proposes to stack.

The Petition never commits to describing which components from which figures of Agazzi '640 it considers to be integrated in a single IC, as opposed to being PCB-mounted components. The Petition never describes which PCBs or ICs of Agazzi '640 would be halved and "vertically stacked" per Wei's teaching. Neither the Petition nor its expert ever explain or show where any vertically stacked components from Agazzi '640 would be added in Wei's SFP module. Petitioner cannot do so without exposing holes with its argument. The Petitioner should have clearly presented its proposed combination and cannot be permitted to unfairly withhold such basic details until after a Preliminary Response or Patent Owners' Response.

Petitioner's failure to make a *prima facie* obviousness argument is another reason to deny institution of the Petition.

B. Ground II: Agazzi '640, Wei, and Agazzi '341

1. Dependent Claims 15 and 16

Claims 15 and 16 depend from claim 1. None of Petitioner's arguments regarding these claims cures the deficiencies regarding claim 1. Because the Petition fails to demonstrate a reasonable likelihood that claim 1 is obvious at least for the reasons discussed above, the Petition similarly fails to demonstrate a reasonable

likelihood of success regarding these dependent claims.

2. Independent Claim 23

Independent Claim 23 includes element 23.I, which reads, "an equalizer for performing equalization on the second m-ary modulation signal to remove noise." This element is similar to claim element 1.I. In the discussion of this element, Petitioner refers only to its previous argument for claim 1.I, and Agazzi '341 is not relied on for claim 1.I. Petition at 39–40. For the same reasons discussed above for claim 1, Petitioner has not shown a likelihood of success, and the Petition should be denied.

C. Ground III: Agazzi '341 and Wei

1. Independent Claim 1: Missing Element 1.J, "an m-ary demodulator" in the receiver

While Agazzi '341 fails to teach many elements, this Preliminary Response focuses on only element 1.J: "***an m-ary demodulator*** for decreasing the number of bits per symbol in the equalized second m-ary modulation signal to produce the second electrical data signal." (emphasis added). The Petition relies exclusively on Agazzi '341's trellis decoder (not Wei) for this element but fails to demonstrate how the trellis decoder is the claimed m-ary demodulator.

In the general context of claim 1, the Petition relies on Figure 5 of Agazzi '341 for the receiver. Petition at 52–57. For preceding claim element 1.H, Petitioner argues that in Figure 5, the "retiming and timing recovery circuit" produces the

claimed "second m-ary modulation signal." Petition at 53–54. Petitioner then argues that this second m-ary modulation signal is processed by the "Forward Equalizer" in Figure 5. Petition at 54–55.

For claim element 1.J ("an m-ary demodulator…"), the Petition points to "[t]he decoder [that] is highlighted in Figure 5 below":

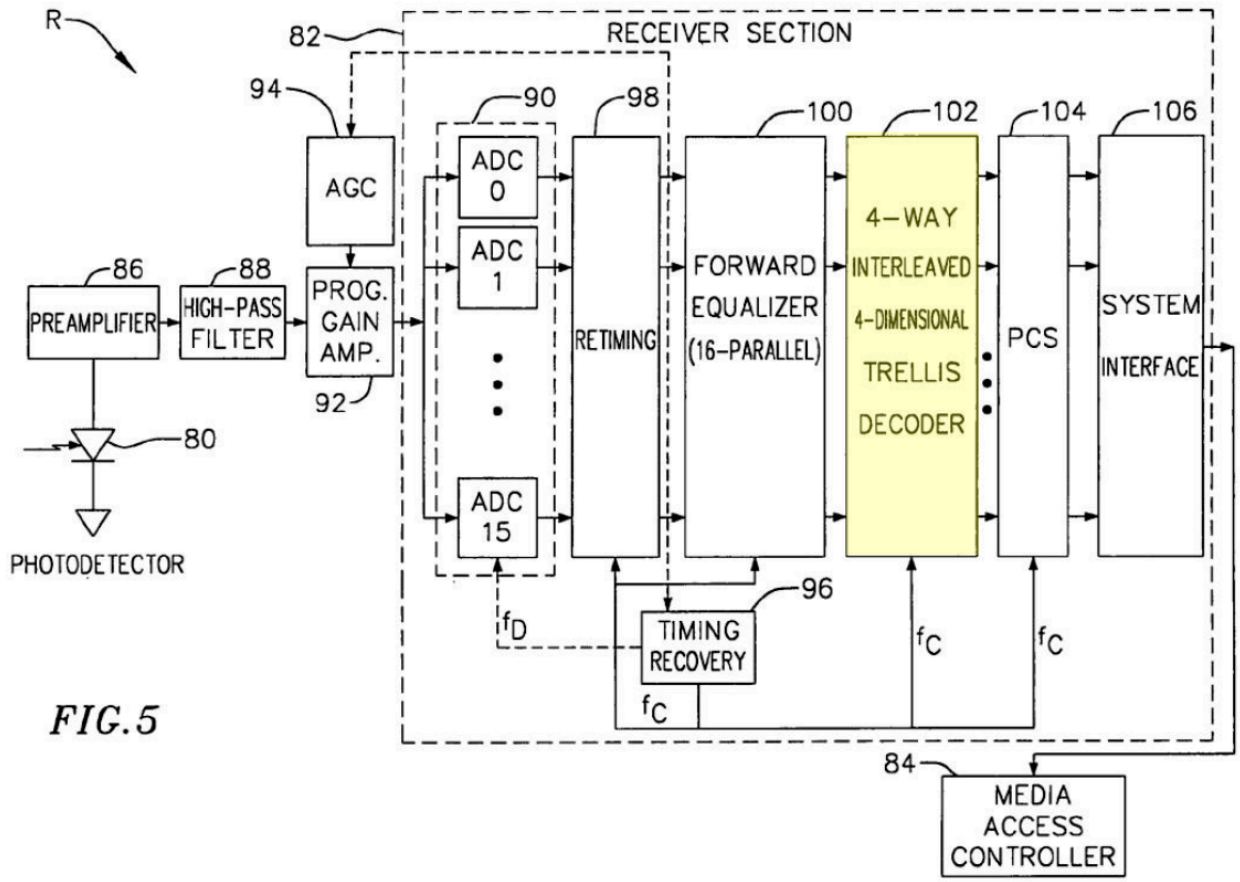

FIG.5

Petition at 55–56 (highlighting by Petitioner).

The Petition cannot demonstrate a reasonable likelihood of success for three reasons: a) Agazzi '341 makes no mention of any demodulator or demodulation, b) the Petition's evidence contradicts any interpretation of a decoder as including a

demodulator, and c) the Petition misapplies an inference.

a. Agazzi '341 Lacks Explicit Disclosure of a Demodulator

Agazzi '341 makes no mention of a demodulator at all, much less the claimed "m-ary demodulator for decreasing the number of bits per symbol in the equalized second m-ary modulation signal to produce the second electrical data signal." ***None*** of Petitioner's citations disclose a demodulator in the decoder of Figure 5 of Agazzi '341. Electronically searching the entirety of Agazzi '341 for the letters "demod" yields no hits. The Board should deny institution on this basis alone.

The Petition does not acknowledge this issue, instead repeatedly emphasizing and citing to PAM-5 ***mod***ulation in the transmitter, not ***demod***ulation in the receiver. Petition at 55–57 (citing Ex. 1009, 4:54–60, 14:28-32); Ex. 1003, ¶ 221-22 (citing Ex. 1009, 15:47-49, 14:35-48 and textbook Ex. 1015 at 121). These citations refer only to ***mod***ulation, but none of them disclose the claimed ***demod***ulation. Neither the Petition nor its expert can cite any part of Agazzi '341 as disclosing the claimed ***demod***ulation or PAM-5 ***demod***ulators because Agazzi '341 never mentions a "demodulator" or "demodulation." Thus, the Petition does not establish that element 1.J is expressly disclosed.

b. The Evidence Contradicts Any Interpretation of a Trellis Decoder as a Demodulator

Unable to find the claimed demodulator, the Petitioner argues that a "decoder"

is the claimed "demodulator." The Petition cites to Agazzi at 14:28-32 to argue that the trellis "decoder" is not only a decoder, but also a "demodulator." Petition at 55. This passage does not refer to demodulating at all. Instead, it teaches that the decoder simply detects the presence of modulation (a threshold PAM level) in the received signal. The Petition does not explain how this disclosure refers to demodulation. Indeed, the '181 Patent teaches that decoding and demodulation are different functionality. Ex. 1001 at Abstract ("to provide a demodulated signal, decoding the demodulated signal"), 3:58–62 ("demodulating the equalized signal . . . to provide a demodulated signal, decoding the demodulated signal"), 4:13–21 ("a demodulator in communication with the equalizer for demodulating the equalized signal . . . to provide a demodulated signal, an inner-decoder in communication with the demodulator for decoding the demodulated signal"). Similarly, Agazzi '640 illustrates that demodulation and decoding are distinct concepts. Ex. 1005 at Fig. 12 (showing demodulator block 215 separate from trellis decoder 1221). All of Petitioner's arguments that a trellis decoder necessarily includes a demodulator are contradicted by Petitioner's own arguments in Ground I when Petitioner points to distinct decoders and demodulators. Petition at 24, 27. And, Agazzi '341 itself suggests that decoding and demodulation are separate functionality because trellis decoding is disclosed as optional functionality to be used in a system that uses PAM-5 modulation. Ex. 1009 at 4:54-57 (describing how trellis decoding achieves a gain

over an uncoded PAM-5 system). Thus, the Petition has not established that the trellis decoder is also a demodulator.

Petitioner's argument should also fail because Examiner Phan already considered a near-identical version of Agazzi '341 Figure 5 when examining related application 11/772,187, and the Examiner never took the position that Petitioner now takes. Ex. 2001 at 33 (citing Agazzi '997); Ex. 2005 at Fig. 5; Ex. 2006 (comparing figures). Agazzi '997 similarly does not describe its trellis decoder as performing demodulation. Ex. 2005 at [0055], Fig. 5. Agazzi '997 and Agazzi '341 use different words to describe what the trellis decoder does, but neither Agazzi '997 nor Agazzi '341 describes the trellis decoder as performing demodulation as argued by Petitioner. Ex. 2005 at [0055]; Ex. 1009, 7:29–50. The Examiner ultimately allowed similar claims that recited a demodulator without ever issuing any rejection that the Agazzi trellis decoder is a demodulator. Ex. 2001 at 2, 13.

Thus, the very evidence relied on by Petitioner demonstrates that the decoder it relies on is not also necessarily a demodulator.

c. Petitioner Misapplies Patent Owners' Litigation Arguments

The Petition attempts to use Patent Owners' infringement contentions to create a disclosure in Agazzi '341 where no such disclosure exists. Petitioner's argument is misplaced. Agazzi '341 provides a detailed description of its system. Petitioner is unable to identify a demodulator within this complete disclosure. Patent

Owners' infringement contentions, on the other hand, are preliminary and based on limited pre-discovery information. Petitioner makes little, if any, information reasonably publicly available about its accused products. Petitioner, for example, does not make detailed block diagrams of the components of its accused devices reasonably publicly available, like Agazzi '341 does. Nor does Petitioner make detailed descriptions of its various components reasonably publicly available. Thus, the infringement contentions make some reasonable inferences on information and belief.

The infringement contentions do not allege that a trellis decoder serves as the claimed demodulator as Petitioner asserts here. Even if Petitioner's assertion about Patent Owners' infringement contentions were relevant, it would not apply here.

Additionally, Patent Owners' infringement contentions are directed to different classes of products. The accused products are all m-ary pluggable optical transceivers. It is admitted that Agazzi '341 is not such a device. Whereas small pluggables can be inferred to contain certain functionality and circuitry, the same is not true for larger multi-component systems like in Agazzi '341, where one component may offload demodulation to some other component. *See* Ex. 1009 at Fig. 20 (showing the transceiver connected through a larger circuit board via a backplane to other devices, any of which might perform offloaded demodulation). Thus, Patent Owners' infringement contentions have no relevance here.

* * *

Accordingly, Petitioner has failed to show the claimed "demodulator" because 1) Agazzi '341 is silent as to demodulation/demodulators, 2) the trellis decoder does not include a demodulator, as evidenced by the '181 Patent, Agazzi '640, and Agazzi '341, and 3) Petitioner incorrectly infers the presence of a demodulator *in a specific decoder* of Agazzi '341's receiver. The Petition has not shown a likelihood of success, and the Board should deny institution.

2. Independent Claims 22 and 23

Independent claims 22 and 23 includes element 22.J and 23.J, both of which read "an m-ary demodulator for decreasing the number of bits per symbol in the equalized second m-ary modulation signal to produce the second electrical data signal." In the discussion of this element, Petitioner refers to its argument for claim 1.J. Petition at 62–63. For the same reasons discussed for Claim 1, Petitioner has not shown a likelihood of success, and the Petition should be denied.

3. All Claims Depending From Claims 1: Claims 2-3, 8, and 10-17

Claims 2, 3, 8, and 10-17 depend from claim 1. None of Petitioner's arguments regarding these claims cures the deficiencies regarding claim 1. Because the Petition fails to demonstrate a reasonable likelihood that claim 1 is obvious at least for the reasons discussed above, the Petition similarly fails to demonstrate a reasonable likelihood of success regarding these dependent claims.

4. The Petition Fails to Articulate a *Prima Facie* Combination

Just as in Ground I, Ground III in the Petition again fails to make a *prima facie* obviousness argument because the Petition never describes a modification or a final product that results from a combination. Although the Petition argues for motivations to combine on pages 41–44, the Petition only vaguely refers to a combination without concretely describing how a POSITA would modify the primary reference or what the final combination actually is. "The Supreme Court in *KSR* noted that the analysis supporting a rejection under 35 U.S.C. § 103 should be made explicit." MPEP § 2143 (citing *KSR Int'l Co. v. Teleflex Inc.*, 550 U.S. 398, 415–21 (2007)). The Petitioner must describe what the resulting combination ***actually is*** before arguing that the result is predictable or successful.

As best understood, the Petition interprets Agazzi '341 as teaching "the transceiver … with integrated optoelectronics on a single circuit" and that "transmitter and receiver sections described herein are implemented as a transceiver integrated circuit as a single chip." Petition at 36, 42. Wei allegedly teaches "vertically stacking the transmitter and receiver ***printed circuit boards***." Petition at 10, 41 (emphasis added). But if the Petition interprets the receiver and transmitter of Agazzi '341 as integrated as a single IC on a single chip, then there are no PCBs to stack according to the teaching of Wei. Alternatively, if Petitioner is proposing that a POSITA somehow take "a transceiver integrated circuit as a single chip" from

Agazzi ’341, cut it in half, and stack it on top of itself, Petitioner has no explanation of how a POSITA could cut an IC and stack it on itself. Petition at 41.

The Petition never commits to describing which components from which figures of Agazzi ’341 it considers to be integrated in a single IC, as opposed to being PCB mounted components. The Petition never describes which PCBs or ICs of Agazzi ’341 would be “vertically stacked” per Wei’s teaching. Neither the Petition nor its expert ever explain or show where any vertically stacked components from Agazzi ’341 would be added in Wei’s SFP module. Petitioner cannot do so without exposing holes with its argument. The Petitioner should have clearly presented its proposed combination and cannot be permitted to unfairly withhold such basic details until after a Preliminary Response or Patent Owner Reply.

Defendants’ failure to make a *prima facie* obviousness argument is another reason to deny institution of the Petition.

D. Ground IV: Agazzi ’341, Wei, and Agazzi ’640

1. Dependent Claims 5 and 6

Claims 5 and 6 depend from claim 1. None of Petitioner’s arguments regarding these claims cures the deficiencies regarding claim 1. Because the Petition fails to demonstrate a reasonable likelihood that claim 1 is obvious at least for the reasons discussed above, the Petition similarly fails to demonstrate a reasonable likelihood of success regarding these dependent claims.

IV. Prosecution History Involves Repeated Examination of an Electrical Reference Combined with a Form Factor Reference

During examination and reexamination, the USPTO repeatedly considered the combination of a primary reference cited for the electrical signal processing components (such as an m-ary modulator, digital to analog converter, driver, amplifier, clock data recovery, equalizer, and/or m-ary demodulator) of an optical transceiver with a second reference cited for a pluggable form factor. This section identifies instances where the USPTO previously considered similar arguments or similar prior art.

A. App. 11/772,187 (Pat. 7,242,868) File History

During examination of related application 11/772,187, Examiner Phan considered Pub. 2001/0035997 to Agazzi ("Agazzi '997"), which is related to Agazzi '341. Ex. 2001 at 33; *see* Section V(A)(2) below (discussing cumulative nature of references). When examining application 11/772,187, the Examiner considered claims for an optical transceiver module comprising an m-ary modulator, driver, optical transmitter, optical detector, amplifier, clock and data recovery unit, equalizer, and demodulator, similar to the challenged claims of the '181 Patent. *Compare*, Ex. 2001 at 13, *with* Ex. 1001 at 15:1–36. The Examiner allowed the pending claims over Agazzi '997. Ex. 2001 at 2.

B. App. 12/512,968 (Patent 9,337,948) File History

During examination of application 12/512,968, the inventors pursued claims

similar to the claims of the presently challenged patent—especially dependent claim 2, which recites types of pluggable form factors. *Compare* Ex. 2002 at 180 *with* Ex. 1001 at 15:1–36. During prosecution, the Examiner repeatedly rejected the claims, citing Pat. 6,603,822 ("Brede") for the electrical signal processing components in combination with Pub. 2007/0031153 ("Aronson") for teaching various pluggable form factors. *See* Section IV(G) below (citing multiple rejections). The Examiner believed that "these types of form factors are well known in the art." Ex. 2002 at 146–47. The Examiner ultimately was persuaded to withdraw his objections and allowed some of the pending claims.

C. App. 15/095,137 (Patent 9,887,795) File History

In the next continuation application 15/095,137, the Examiner issued multiple rejections based on combinations that cited one reference for electrical components and a second reference for the pluggable form factor. First, the Examiner again rejected the claims based on Brede and Aronson, citing Brede for electrical components and Aronson for teaching that "these types of form factors are well known in the art." Ex. 1024 at 174–78. Next, the Examiner issued a rejection based on a combination of Pat. 9,337,948, which was cited for the electrical components, with Pub. 2002/0181895 ("Gilliland"), which was cited to show that "a pluggable optical transceiver module is well known in the art." *Id.* at 120. Finally, the Examiner issued a rejection citing Brede for electrical components in combination with Pat.

7,729,617 ("Sheth") such that one would "utilize a pluggable form factor standard as taught by Sheth." *Id.* at 121–23, 126–27.

The inventors submitted evidence and arguments to overcome the Examiner's rejections based on these combinations. *Id.* at 161, 152–56, 69–74. The inventors also amended the independent claim to recite "pluggable" throughout to ensure this word received patentable weight and to distinguish line card products like in Brede. *Id.* at 148–49. Ultimately, the amendments and arguments persuaded the Examiner that it was not obvious to combine one reference teaching electrical signal processing components with a second reference teaching a pluggable form factor, and the Examiner allowed the pending claims. The claims issued in the '795 Patent, which Petitioner challenges in IPR2023-00680.

D. App. 15/884,351 (Patent 10,263,723) File History

In this continuation, the Examiner allowed the claims in a first action allowance. Ex. 1026 at 50. The claims issued in the '723 Patent, which Petitioner challenges in IPR2023-00681.

E. App. 16/297,610 ('181 Patent) File History

In this continuation, the Examiner considered similar prior art and issued a double patenting rejection. Ex. 1002 at 124–33. After an amendment and a terminal disclaimer, the Examiner issued a notice of allowance. The claims issued in the '181 Patent, which Petitioner challenges in IPR2023-00682.

F. The Board Denied Institution of Previous IPR Petitions

Finisar Corporation (the real party behind "II-VI, Inc.") filed petitions in IPR2021-01358, IPR2021-01359, and IPR2021-01361 seeking review of Patent Nos. 9,887,795; 10,263,723; and 10,771,181. In these petitions, Finisar/II-VI presented multiple combinations where one reference was cited as disclosing electrical components and a second reference was cited as disclosing the use of a pluggable optical transceiver form factor. *II-VI, Inc. v. Alexander Soto*, IPR2021-01361, Paper 1 at 12–13 (PTAB Aug. 6, 2021). The Board exercised its discretion to deny institution in all three petitions under 35 U.S.C. § 325(d). *II-VI, Inc. v. Alexander Soto*, IPR2021-01361, Paper 10 at 34 (PTAB. Feb. 15, 2022).[3]

In denying Finisar's/II-VI's IPR petitions, the Board first considered the proposed combination of Brede and Pub. 2004/0052528 ("Halgren"). *Id.* at 23–29. Finisar/II-VI relied on Brede for teaching the claimed electrical signal processing components while relying on Halgren for teaching "pluggable form factors, arriving at a pluggable optical transceiver." *Id.* at 23–24. The Board denied institution because Halgren was "substantially the same because it is applied for its alleged

[3] The petitions and decisions in IPR2021-01358, IPR2021-01359, and IPR2021-01361 were substantially similar across the three cases. For brevity, this Petition makes exemplary citations only to the IPR2021-10361 case.

disclosure of standard form factors into which Brede's device can allegedly be incorporated, just as the Examiner applied Aronson and Sheth as disclosing form factors into which Brede's device can allegedly be combined." *Id.* at 25. The Board found that the Examiner had specific knowledge of standardized pluggable form factors in the industry based on Aronson, Gilliland, and Sheth. *Id.* at 28. Thus, Brede and Halgren presented "substantially the same art and substantially the same arguments," warranting denial of institution. *Id.* at 29.

Next, the Board considered Finisar's/II-VI's proposed combination of Pub. 2003/0112896 ("Raghavan") and Pub. 2003/0118273 ("Richard"). *Id.* at 29–31. Raghavan described a data transmission system, where "[t]ransmitter systems 210 and receiver systems 220 may be implemented as a transceiver formed on a single semiconductor chip." *Id.* at 14–15. Richard described an optical device that may be made with "a standard form factor" such as "the GBIC form factor, the small form factor (SFF) and the small form pluggable (SFP) form factor." *Id.* at 18. This second combination followed the same electrical teaching plus form factor teaching template. Finisar/II-VI relied "on Raghavan for its description of a transceiver chip that can transmit data using multiple frequency-separated channels, and on Richard for its disclosure of a variety of form factors to allow for use in a hot pluggable environment." *Id.* at 30 (internal quotations and alterations omitted). Specifically, Finisar/II-VI contended that a POSITA "would have been motivated to provide the

functionality of *Raghavan's* transceiver chip into *Richard's* form factors to make *Raghavan's* transceiver chip hot pluggable." *Id.* at 32 (italics original). The Board concluded that this rationale "parallels Petitioner's contention for the combination of Brede and Halgren," merely "with Raghavan substituting for Brede and Richard substituting for Halgren." *Id.* at 30. Thus, this Raghavan and Richard combination presented "substantially the same art and substantially the same arguments," warranting denial of institution. *Id.* at 31.

Finally, the Board considered Finisar's/II-VI's proposed combination of Pub. 2002/0012152 to Agazzi ("Agazzi '152") and Richard. As with Brede and Raghavan, Finisar/II-VI relied on Agazzi '152 for describing the electrical components of "electrical and optical receivers and transceivers that rely on processing of optical signals," including the digital processing therein. *Id.* at 12–13, 31. Finisar/II-VI again relied on Richard for teaching "a variety of form factors that allow for use in a hot pluggable environment." *Id.* at 31–32 (cleaned up). The Board again concluded that this line of argument "parallels the rationale advanced for the Brede-Halgren and Raghavan-Richard challenges," namely that "a person of ordinary skill in the art would have been motivated to provide the functionality of *Agazzi* into *Richard's* form factors." *Id.* at 32 (italics original). Thus, Agazzi '152 and Richard presented "substantially the same art and substantially the same arguments," warranting denial of institution. *Id.* at 33.

G. Summary of Related Family and Considered Combinations

The ’181 Patent relates to other applications summarized in Table 1 below:

App. No.	(Patented As)	Relationship	Parent App. No.	(Patented As)
16/297,610	10,771,181	Continues from	15/884,351	10,263,723
15/884,351	10,263,723	Continues from	15/095,137	9,887,795
15/095,137	9,887,795	Continues from	12/512,968	9,337,948
12/512,968	9,337,948	Continues from	11/772,187	(none)
11/772,187	(none)	Continues-in-Part from	10/865,547	7,242,868
10/865,547	7,242,868	Claims priority to	(Provisionals)	(Expired)

Table 1

During examination and reexamination, the USPTO ***repeatedly and extensively*** considered the combination of one reference cited for the electrical signal processing components (such as an m-ary modulator, digital to analog converter, driver, amplifier, clock data recovery, equalizer, and/or m-ary demodulator) of a transceiver with a second reference cited for a pluggable form factor. So far, the USPTO has already considered or is considering the following:

- Brede cited for a transceiver’s electrical signal processing components, in combination with Aronson cited for the form factor. Ex. 2002 (App. 12/512,968) at 142–43, 146–47 (rejecting claims), 135 (summarizing interview arguments), 107–08, 112–13 (rejecting claims), 78–84 (appealing rejection), 45–50

(answering the appeal brief), 27–29 (ruling on appeal); Ex. 1024 (App. 15/095,137) at 174–78 (rejecting claims).

- Patent 9,337,948 to Soto cited for a transceiver's electrical signal processing components, in combination with Gilliland cited for the form factor. Ex. 1024 (App. 15/095,137) at 120 (rejecting claims).
- Brede cited for a transceiver's electrical signal processing components, in combination with Sheth cited for the form factor. Ex. 1024 (App. 15/095,137) at 121–23, 126–27 (rejecting claims), 69–72 (responding to office action).
- Raghavan cited for a transceiver's electrical signal processing components, in combination with Richard cited for the form factor. *II-VI, Inc. v. Alexander Soto,* IPR2021-01358, Paper 10 at 3, 12–13, 26–27 (PTAB Feb. 15, 2022) (denying institution); *II-VI, Inc. v. Alexander Soto,* IPR2021-01359, Paper 10 at 11, 13–14, 17, 28–29 (PTAB Feb. 15, 2022) (denying institution); *II-VI, Inc. v. Alexander Soto,* IPR2021-01361, Paper 10 at 11, 14–15, 18, 29–31 (PTAB Feb. 15, 2022) (denying institution).
- Agazzi '152 cited for a transceiver's electrical signal processing components, in combination with Richard cited for the form factor. *II-VI, Inc. v. Alexander Soto,* IPR2021-01358, Paper 10 at 3, 13–14, 27–29 (denying institution); *II-VI, Inc. v. Alexander Soto,* IPR2021-01359, Paper 10 at 11, 12–13, 17, 30–31 (denying institution); *II-VI, Inc. v. Alexander Soto,* IPR2021-01361, Paper 10 at 11, 12–

13, 18, 31–33 (denying institution).

- Brede cited for a transceiver's electrical signal processing components, in combination with Halgren cited for the form factor. *II-VI, Inc. v. Alexander Soto,* IPR2021-01358, Paper 10 at 3, 15–17, 20–26 (denying institution); *II-VI, Inc. v. Alexander Soto,* IPR2021-01359, Paper 10 at 11, 15–17, 22–28 (denying institution); *II-VI, Inc. v. Alexander Soto,* IPR2021-01361, Paper 10 at 11, 16-18, 23–29 (denying institution).
- Agazzi '640 cited for a transceiver's electrical signal processing components, in combination with Wei cited for the form factor. *Nokia of Am. Corp. v. Alexander Soto*, IPR2023-00680, Paper 1 at 9–27 (PTAB Mar. 15, 2023) (petitioning for review); *Nokia of Am. Corp. v. Alexander Soto*, IPR2023-00681, Paper 1 at 9–30 (PTAB Mar. 15, 2023) (petitioning for review); *Nokia of Am. Corp. v. Alexander Soto*, IPR2023-00682, Paper 1 at 9–28 (PTAB Mar. 15, 2023) (petitioning for review).
- Agazzi '341 cited for a transceiver's electrical signal processing components, in combination with Wei cited for the form factor. *Nokia of Am. Corp. v. Alexander Soto*, IPR2023-00680, Paper 1 at 39–55 (petitioning for review); *Nokia of Am. Corp. v. Alexander Soto*, IPR2023-00681, Paper 1 at 43–61 (petitioning for review); *Nokia of Am. Corp. v. Alexander Soto*, IPR2023-00682, Paper 1 at 40–57 (petitioning for review).

- Pub. 2002/0167693 ("Vrazel") cited for a transceiver's electrical signal processing components, in combination with Pub. 2003/0020986 ("Pang") cited for the form factor. *Infinera Corp. v. Alexander Soto*, IPR2023-00834, Paper 2, *passim* (PTAB Apr. 14, 2023) (petitioning for review); *Infinera Corp. v. Alexander Soto*, IPR2023-00835, Paper 2, *passim* (PTAB Apr. 14, 2023) (petitioning for review); *Infinera Corp. v. Alexander Soto*, IPR2023-00838, Paper 2, *passim* (PTAB Apr. 14, 2023) (petitioning for review).

V. The Board Should Use Its Discretion to Deny Institution Under Section 325(d)

The Board should deny institution under 35 U.S.C. § 325(d) because two examiners and the Board have repeatedly considered the exact type of grounds raised in the Petition: a first reference cited for electrical signal processing components combined with a second reference cited for pluggable form factors.

In *Advanced Bionics, LLC v. Med-El Elektromedizinische Geräte GmbH*, the PTAB denied institution under Section 325(d) after evaluating the petition under a two-part test:

> 1) whether the petition presents to the Office the same or substantially the same art or arguments previously presented to the Office; and,
> 2) if either condition is satisfied, whether the petitioner has demonstrated that the Office erred in a manner material to patentability of the challenged claims.

IPR2019-01469, Paper 6 (PTAB Feb. 6, 2020) (precedential). As part of this

analysis, the Board considers the non-exclusive *Becton, Dickinson* factors:

> (a) the similarities and material differences between the asserted art and the prior art involved during examination [or any proceeding];
>
> (b) the cumulative nature of the asserted art and the prior art evaluated during examination [or any proceeding];
>
> (c) the extent to which the asserted art was evaluated during examination, including whether the prior art was the basis for rejection;
>
> (d) the extent of the overlap between the arguments made during examination and the manner in which Petitioner relies on the prior art or Patent Owner distinguishes the prior art;
>
> (e) whether Petitioner has pointed out sufficiently how the Examiner erred in its evaluation of the asserted prior art; and
>
> (f) the extent to which additional evidence and facts presented in the Petition warrant reconsideration of the prior art or arguments.

Becton, Dickinson & Co. v. B. Braun Melsungen AG, IPR2017-01586, Paper 8 at 17–18 (PTAB Dec. 15, 2017) (precedential); *Advanced Bionics* at 10.

A. *Becton, Dickinson* Factors (a)-(d) Support Denial Because the Petition Reargues the Extensively-Examined Combination of an Electrical Reference With a Form Factor Reference

All of the Grounds in the Petition make the same basic argument: that one reference (Agazzi ’640 or Agazzi ’341) teaches the electrical signal processing components, and a second reference (Wei) teaches the pluggable form factor. Multiple examiners and the Board repeatedly considered this type of argument and rejected it.

As discussed above, the examiners considered multiple combinations where Brede or Patent 9,337,948 (for their purported electrical signal processing) were combined with a pluggable transceiver patent (*e.g.*, Aronson, Sheth, or Gilliland). *See* Section IV(G), above. Each time, the examiners ultimately issued the patent. *See* Section IV(A)–(E), above. Finisar/II-VI made the same arguments, using a wider variety of electrical and form factor references. *See* Section IV(F), above. The Board declined to institute Finisar/II-VI's petition, noting that the Petitioner presented "substantially the same art and substantially the same arguments." *II-VI, Inc. v. Alexander Soto*, IPR2021-01361, Paper 10 at 29, 31, 33.

The present Petition again makes the same arguments, just using other references to make the same points. The Petition again argues that one reference discloses all of the electrical components (Agazzi '640 or Agazzi '341) and a second reference discloses the pluggable form factor disclosure (Wei). Because the Examiner extensively considered this type of combination during prosecution, *Becton, Dickinson* factors (a)–(d) favor denial. Petitioner uses Agazzi '640 and Agazzi '341 (a) similarly to the previously considered Brede, Patent 9,337,948, Agazzi '152, and Raghavan references, (b) for the same teachings of electrical signal processing components, (c) after the USPTO extensively considered these references in the same manner, and (d) Petitioner makes the same type of combination in the same way as previously rejected by the Examiner.

Agazzi ’640 and Agazzi ’341 may not have exactly the same disclosure as Brede, Patent 9,337,948, Agazzi ’152, and Raghavan, but the distinctions have no relevance because Petitioner ultimately cites Agazzi ’640 and Agazzi ’341 for allegedly disclosing the same electrical signal processing parts of the claims. In the Finisar/II-VI Institution Denials, the Board recognized that simply substituting another reference while making the same basic argument failed to merit institution. IPR2021-01361, Paper 10*,* at 31–33 (referring to Agazzi ’152 and Richard).

1. The Board Already Declined to Institute an IPR Petition Based On an Agazzi Plus Form Factor Reference Argument

The Board declined to institute *inter partes* reexamination in the Finisar/IV-II IPR’s when presented with the same type of argument combining Pub. 2002/0012152 to Agazzi (“Agazzi ’152”) with the Richard form factor reference. IPR2021-01361, Paper 10*,* at 31–33. In that decision, the Board recognized that Petitioner cited Agazzi ’152 for “electrical and optical receivers and transceivers that rely on processing of optical signals,” combined with “Richard for the same disclosure . . . namely a variety of form factors that allow for use in a hot pluggable environment.” *Id.* at 31–32 (cleaned up).

Petitioner now repeats this argument again, substituting Agazzi ’640 or Agazzi ’341 in place of Agazzi ’152, combined with Wei (instead of Richard) for the form factor. The Board considered the *Becton, Dickinson* factors and concluded

that this line of argument "parallels the rationale advanced for the Brede-Halgren and Raghavan-Richard challenges," namely that "a person of ordinary skill in the art would have been motivated to provide the functionality of *Agazzi* into *Richard's* form factors." IPR2021-01361, Paper 10, at 32. Because the Board already decided that Agazzi '152 and Richard presented "substantially the same art and substantially the same arguments," warranting denial of institution, the Board should decline to institute this IPR again under the same reasoning. *Id.* at 33.

2. Petitioner's Agazzi '341 Reference is Cumulative of the Examined Agazzi '997 Reference

As a continuation-in-part, the Agazzi '341 reference that Petitioner relies on is inherently cumulative of Agazzi '997, which the Examiner considered during examination. Ex. 2001 at 33 (citing Agazzi '997 in IDS). These two Agazzi references share similarities in Figures 1-5. *See* Ex. 2006 (comparing Figures 1–5). Most importantly, Figure 5—relied on by Petitioner and addressed in Ground III above—is almost identical.

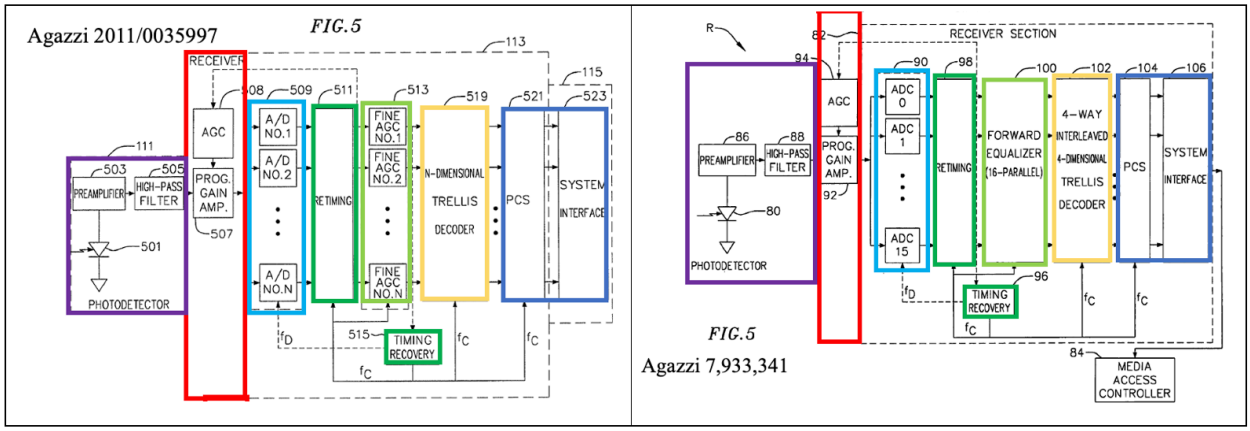

Ex. 2005 at Fig. 5(annotated); Ex. 1009 at Fig. 5 (annotated). Like Agazzi '341, Agazzi '997 similarly discloses a PAM-modulated transmitter system with no discussion of demodulation in the receiver. Ex. 2005 at [0004], [0028], [0050]–[0056].

In both references, a transmitter sends pulse amplitude modulated ("PAM") signals. Ex. 2005 at [0004], [0038]; Ex. 1009, 4:28–39. Both references describe Fig. 5 as a block diagram of a "receiver." Ex. 2005 at [0011]; Ex. 1009, 2:54-55. In Agazzi '997, block "519" is an "n-dimensional trellis decoder," just like block 102 in Agazzi '341. Thus, the Examiner knew about the type of receiver presented by Petitioner and allowed the claims over this type of reference. Ex. 2001 at 2. Because the relied-upon receivers of Figure 5 (as well as Figures 1-4) are cumulative, this Petition does not warrant reconsideration.

3. The USPTO Already Considered Chip-Based References Like Agazzi '640 and Agazzi '341

Petitioner uses Agazzi '640 and Agazzi '341 for chip-based electrical components, an argument that the USPTO repeatedly considered when considering Raghavan, Aronson, and Agazzi '997.

First, Finisar/II-VI similarly used Raghavan in three petitions where the PTAB denied institution. *See* Section IV(G) above (listing three IPR's involving Raghavan). Raghavan described a data transmission system where "[t]ransmitter systems 210 and receiver systems 220 may be implemented as a transceiver formed

on a single semiconductor chip." *II-VI, Inc. v. Alexander Soto,* IPR2021-01361, Paper 10, at 14–15. Finisar/II-VI relied on Raghavan for its description of a transceiver chip including electrical signal processing components in combination with "Richard for its disclosure of a variety of form factors to allow for use in a hot pluggable environment." *Id.* at 30 (internal quotations and alterations omitted).

Petitioner describes and uses Agazzi '640 and Agazzi '341 in the same way, for the claimed electrical signal processing capabilities in a single chip. Petitioner describes Agazzi '640 as teaching "digital signal processing (DSP) and coding algorithms . . . in a single monolithic chip," where the "receivers and transmitters are integrated on a single integrated circuit." Petition at 10, 11. Petitioner similarly describes Agazzi '341 as teaching the electrical signal processing components of "transmitter and receiver sections . . . implemented as a transceiver integrated circuit constructed as a single chip." *Id.* at 36. Petitioner repeats the same "hot pluggable" combination argument. Petition at 11, 18, 19, 41, 43. Just as Finisar/II-VI relied on the secondary reference Richard for pluggable form factors, the Petitioner now relies on the secondary reference Wei for teaching pluggable form factors.

Three PTAB judges explicitly considered and denied institution when presented with a chip-based transceiver reference like Raghavan used for the electrical signal processing components of a transceiver in combination with a second reference used for a form factor. *II-VI, Inc. v. Alexander Soto,* IPR2021-

01361, Paper 10, at 29–31. The "transceiver chip" and "hot pluggable" aspects made no difference. *Id.* The Board appeared well-aware that electrical components could be implemented as integrated chips. Ultimately, the Board found that "significant similarities with the art involved during examination" under the *Becton, Dickinson* test and that "for the obviousness challenges over Raghavan and Richard, (1) substantially the same art and substantially the same arguments were previously presented to the Office." *Id.* at 30–31. Thus, the Board concluded "that it is appropriate to exercise our discretion under 35 U.S.C. § 325(d) to deny the Petition." *Id.* at 31. Here, Petitioner made no attempt to identify any errors with the Board's decision regarding Raghavan and Richard, and Petitioner presents no new evidence or arguments. The same outcome should result: discretionary denial.

Second, the Examiner issued multiple rejections based on Aronson, which teaches integrated circuits. Ex. 2002 at 146–47 (rejecting claims), 112–13 (maintaining rejection); Ex. 1024 at 177–78. Aronson describes an XFP module where "eye open and ROSA [receiver optical sub-assembly] may be integrated within a single ASIC." Ex. 2003 at [0045]. Thus, the Agazzi '640 and Agazzi '341 teachings of electrical signal processing components in a single integrated circuit or single chip were already considered.

Finally, the Examiner found and cited Agazzi '997, which states, "technology such as CMOS . . . may be used to implement the electronic circuitry." Ex. 2005 at

[0039]; Ex. 2001 at 33 (citing Agazzi '997). As explained in preceding section V(A)(2), Agazzi '341 is cumulative disclosure of Agazzi '997. Thus, the Agazzi '640 and Agazzi '341 teachings of electrical signal processing components in a single integrated circuit or single chip were already considered.

4. The Wei Reference is Similar to References Already Examined for Form Factors

Petitioner cites the Wei reference for teaching a "pluggable" form factor—the same way that Aronson, Gilliland, Sheth, Richard, and Halgren have been repeatedly considered by multiple Examiners and Board.

During prosecution of the family of the '181 Patent, the Examiner cited Aronson, Gilliland, and Sheth for teaching a pluggable form factor to be combined with a primary reference. *See* Section IV(G), above (citing instances); *see also* Section V(B)(1)-(3) below (describing how the Examiner relied on these references). The Board further considered Richard and Halgren for IPR, cited by Finisar/II-VI for teaching the pluggable form factor to be combined with a primary reference, and the Board declined to institute review. *See* Section IV(F) above (citing instances).

Petitioner now uses Wei in the same way—merely for teaching a pluggable form factor. Petition at 10, 14–15, 28, 40, 45, 57. Because the Examiner and Board extensively considered this type of combination, *Becton, Dickinson* factors (a)–(d) favor denial. Petitioner uses Wei (a) similarly to previously considered form factor references, (b) for cumulative teachings of "pluggable" form factors, and (c) when

the PTO extensively and explicitly addressed this type of secondary reference in both prosecution and reexamination. Now, (d) Petitioner makes the same type of combination by substituting Wei in place of the previously examined form factor references. The Board should deny institution under 35 U.S.C. § 325(d).

B. *Becton, Dickinson* Factor (e) Supports Denial Because The USPTO Made No Errors During Prosecution or IPR

None of the "errors" identified in the Petition have any merit. First, the USPTO was well-aware of pluggable form factors. Second, the USPTO knew about integrated optoelectronics, such as in the Agazzi '997, Aronson, and Raghavan references. Third, the USPTO already had Aronson to show how Aronson's integrated optoelectronics fit in a pluggable module. *Becton, Dickinson* factor (e) weighs against institution. Neither the Examiner nor the Board made any errors when examining the '181 Patent or its family.

1. The USPTO Knew About Pluggable Form Factors

The Petition argues that "Applicants failed to disclose that the pluggable form factors were set out in industry recognized multisource agreements . . . . nor is it clear the Examiner understood this fact." Petition at 70–71. This is demonstrably false. Indeed, claims 2 and 3 expressly disclose the existence of form factor standards, as does the specification (Ex. 1001 at 11:24–26).

Nor was the Examiner ignorant of this fact. During examination of application 12/512,968, the Examiner issued a nonfinal office action rejecting the claims

because "as evidenced by Aronson, these types of form factors [SFP; SFP+; XFP; X2; XENPAK; XPA] are well known in the art (paragraph [0005], [0011], [0045])"). Ex. 2002 at 146–47 (rejecting claims), 112–13 (maintaining rejection); Ex. 1024 at 177–78. Paragraph [0005] of Aronson, cited by the Examiner, explicitly mentions an industry multisource agreement. Ex. 2003 at [0005] ("For instance, the XFP (10 Gb/s serial electrical interface) Pluggable Module Multi-Source Agreement is directed at transceivers operating at approximately 10 Gb/s"); *see also* Ex. 2004 at [0003] (Gilliland reference cited and relied on by Examiner: "detailed information of the GBIC is provided in the 'SFF Committee Proposed Specification for GBIC (Gigabit Interface Converter),' Revision 5.5, dated Sep. 27, 2000, which is hereby incorporated by reference."); Ex. 1024 at 126–27 (Examiner arguing: "Sheth in particular teaches . . . the pluggable form factor standard of the pluggable optical transceiver module is an SFP form factor or SFP+ form factor standard.").

The inventors did not "fail to disclose" the standardized nature of pluggable form factors and there is no evidence the Examiner was ignorant of this fact.

2. The USPTO Considered Multiple References With Integrated Optoelectronics

Petitioner next argues that, unlike Agazzi '341 and Agazzi '640, "the Examiner never had a primary reference with integrated optoelectronics," specifically in the case where "the receivers and transmitters are integrated on a single integrated circuit." Petition at 68. Petitioner is again wrong. As explained in

Section V(A)(3) above, the USPTO considered three references teaching integrated optoelectronics.

As a first example, the Examiner cited Agazzi ’997, which states, “technology such as CMOS . . . may be used to implement the electronic circuitry.” Ex. 2005 at [0039]; Ex. 2001 at 33 (citing Agazzi ’997). This refers to implementing the electronic circuits of the transmitter and receiver in Figures 1-5 in a CMOS integrated circuit. Ex. 2005 at Figs. 1-5. As explained in Section IV(A)(2) above, Agazzi ’997 is a related parent of the asserted Agazzi ’341 reference. Agazzi ’997 and Agazzi ’341 use similar figures to show the transmitter and receiver. Ex. 2006. Thus, the examiner already knew about using CMOS integrated circuits to implement the transmitter and receiver from this ***cumulative*** disclosure of Agazzi ’997.

Second, the Examiner repeatedly cited Aronson during examination and repeatedly issued rejections based on Aronson, which includes integrated optoelectronics. Ex. 2002 at 146–47 (rejecting claims), 112–13 (maintaining rejection); Ex. 1024 at 177–78. Aronson describes an XFP module where “eye open and ROSA [receiver optical sub-assembly] may be integrated within a single ASIC.” Ex. 2003 at [0045]. “ASIC” stands for application specific integrated circuit. Thus, the Examiner had Aronson’s teaching of optoelectronics in the form of an optical sub-assembly integrated with a single integrated circuit.

Finally, the Board already decided this issue when considering Finisar's/II-VI's proposed combination of Raghavan and Richard. *II-VI, Inc. v. Alexander Soto,* IPR2021-01361, Paper 10*,* at 29–31. Raghavan described a data transmission system, where "[t]ransmitter systems 210 and receiver systems 220 may be implemented as a transceiver formed on a single semiconductor chip." *Id.* at 14–15. Like the Examiner, the Board also knew about transmitters and receivers implemented with integrated circuits when the Board declined to institute reexamination. *Id.* at 29–31.

Thus, Petitioner argument that "the Examiner never had a primary reference with integrated optoelectronics" (Petition at 69) is not relevant because the Examiner knew about integrated optoelectronics from at least two different references and considered their combination with other references. The Board has also considered a primary reference with an integrated circuit, Raghavan, and still denied Finisar's/II-VI's petition. Just as the Board then found that Raghavan and Richard combination "substantially the same art and substantially the same arguments," warranting denial of institution, the Board now should deny this Petition for the same reasons. *II-VI, Inc. v. Alexander Soto,* IPR2021-01361, Paper 10 at 31.

3. The USPTO Considered Pluggable Form Factors with "Stacked" PCBs

Petitioner next argues that, "the Examiner never had a reference that disclosed how to efficiently package the optoelectronics … to fit within a pluggable form

factor." Petition at 69. This efficiency was not a problem. For example, the Aronson reference was cited by the Examiner for teaching the pluggable form factor. *See* Section IV(G), above (citing instances). Aronson is titled, "Transceiver Module and Integrated Circuit with Dual Eye Openers." From the title alone, there was no question that Aronson's integrated circuits, optics, and electronics (what Petitioner appears to refer to as "optoelectronics") fit in Aronson's transceiver module. *See also* Ex. 2003 at [0045], [0048] (discussing optics), [0045], [0050], [0057], [0059–60] (discussing integrated circuit), Fig. 2 (showing both transmitter and receiver within transceiver module), Figs. 4-5 (showing transceiver module including integrated circuit and optics). Thus, this argument from Petitioner should be rejected.

C. *Beckton, Dickinson* Factor (f) Weighs Against Institution Because The Petition Has No New Evidence or Facts Warranting Reconsideration

Petitioner does not submit any new evidence or facts warranting reconsideration, nor are Petitioner's arguments differentiating the references persuasive. It simply makes the same arguments using other cumulative references. A conclusory expert declaration, making arguments similar to those in the Finisar/II-VI petitions, is not new evidence. *Beckton, Dickinson* factor (f) therefore weighs against institution.

D. Conclusion: Institution Should Be Denied Under *Advanced Bionics*

As demonstrated above, each of the factors in the *Advanced Bionics* and

Becton, Dickinson analysis strongly favors denying institution. Each of Petitioner's grounds is repetitive of arguments the Examiner and Board have already considered and rejected. Petitioner has provided no compelling (or accurate) reasons to revisit these decisions. Institution should be denied.

VI. The Board Should Deny Institution Under *Fintiv*

The Board should not waste its limited resources on reconsidering the same types of repeatedly rejected arguments when, under the *Fintiv* factors, the Board's decision will likely have no effect whatsoever on trial. The final written decision is not expected until November 16, 2024, well after the trial scheduled for May 6, 2024.

The *Fintiv* factors are: 1) whether the court granted a stay, or evidence exists that one may be granted if a proceeding is instituted; 2) a comparison of the district court trial date to the Board's statutory deadline; 3) an investment in the district court proceedings; 4) overlap between issues raised in the petition and in the parallel proceeding; 5) overlapping parties; and 6) other considerations. *Apple Inc. v. Fintiv, Inc.*, IPR2020-00019, Paper 11 at 13-14 (PTAB Mar. 20, 2020) (precedential).

Factor 1 (a stay) weighs against institution. Judge Gilstrap has rarely stayed a patent case pending *inter partes* review, only granting 4 of 44 motions to stay pending an IPR (9.1%) according to a report from Docket Navigator:

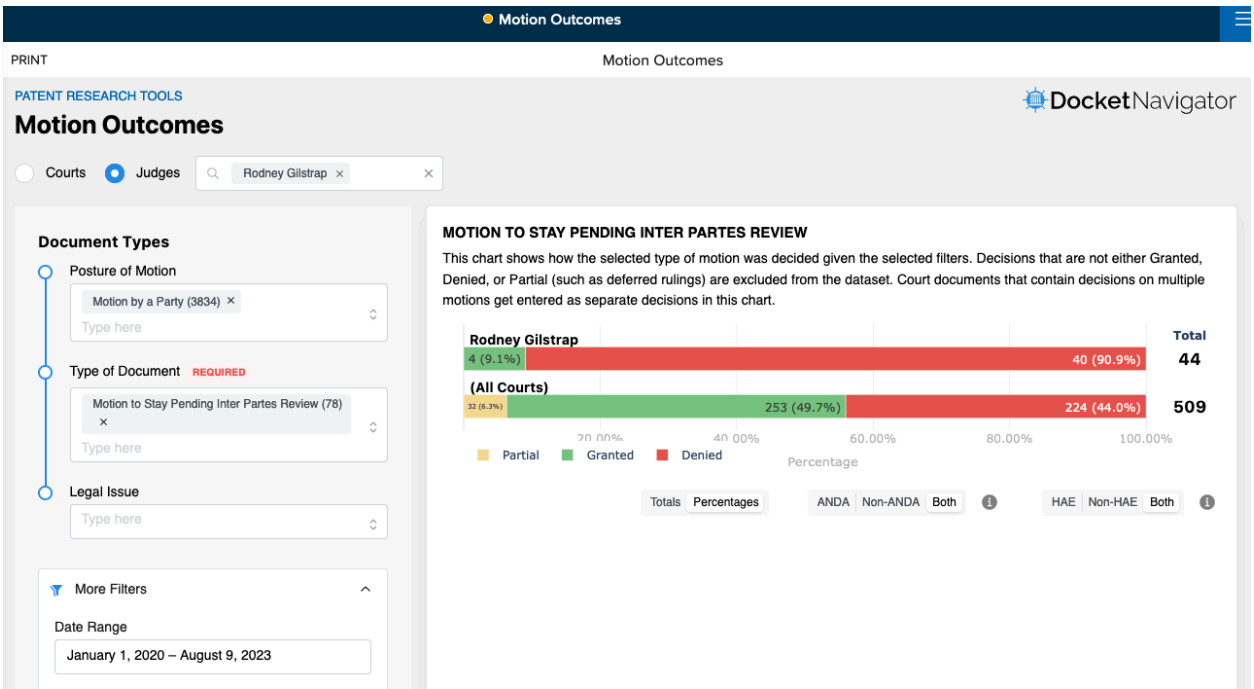

Docket Navigator Motion Outcomes Report (August 9, 2023)

Because of the 90.9% chance that a stay will be denied, this factor weighs against institution.

Factor 2 (the trial and written decision deadlines) also weighs heavily against institution. Trial is set for May 6, 2024 (Ex. 1027 at 1), which is consistent with Petitioner's time-to-trial statistics (Petition at 72). The final written decision is not expected until November 16, 2024, over six months after trial. Nothing suggests that litigation will deviate from the schedule or mean statistics by more than half a year, especially because Petitioner has not moved to stay the case. The COVID-delay concerns from *Dish Network v. Broadband iTV*, IPR2020-01280, Paper 17 at 16 (PTAB Feb. 4, 2021) no longer apply. Precedent weighs these facts in favor of denying institution. *Fintiv* at 9.

Factor 3 (investment in court proceedings) favors denial. The parties have already invested heavily in the litigation, including serving contentions, taking discovery and discovery motion practice. By the time the Board reaches the deadline for an institution decision on November 16, 2023, the parties will have fully briefed claim construction, the District Court will have held a claim construction hearing (scheduled for November 8, 2023), and expert reports will be due a few weeks later (December 6, 2023). Petitioner could have filed the Petition earlier—it served invalidity contentions in the litigation months prior to the Petition (February 2, 2023) and likely had identified these grounds well before its contentions were served—but Petitioner offers no reason for this delay. This factor weighs against institution. *Fintiv* at 9–10.

Factor 4 (overlap of the issues) weighs, at best, neutral. Petitioner's invalidity contentions assert the same references (Agazzi '341, Agazzi '640 and Wei) and the same arguments. Petitioner attempts to minimize this issue by arguing to the Board that it would not pursue the identical, "specific combination of prior art references set forth in the grounds presented in this Petition." Petition at 73. Petitioner's representation of the Board is a far cry from a *Sotera*-type stipulation in which a

petitioner stipulates to a court (not the Board)[4] that it will not pursue in district court the same grounds in the petition as well as "any other ground . . . that was raised or could have been reasonably raised in an IPR." *See Sotera Wireless, Inc. v. Masimo Corp.*, IPR2020-01019, Paper 12 at 13–14, 18–19 (PTAB Dec. 1, 2020) (precedential). Petitioner instead seeks to reserve its right to reargue the Agazzi '341 and '640 references in combination with any other secondary reference related to pluggable form factors, and perhaps even to argue the combinations of Agazzi '640 and Agazzi '341 with Wei using different cited evidence or arguments. In cases such as this, where Petitioner's stipulation amounts to an "empty promise," recent PTAB decisions find this factor neutral. *Ericsson Inc. v. Godo Kaisha IP Bridge 1*, IPR2022-00726, Paper 11 at 12–13 (PTAB. Nov. 2, 2022) (addressing differences in *Sotera* and *Sand Revolution* stipulations).

Factor 5 is agreed to be neutral.

The final *Fintiv* factor considers the merits and other circumstances. For the reasons in Section III above, the Petition is not likely to succeed on the merits, much less reach any level of compelling merit. Finally, as discussed in Section V above,

[4] Petitioner's refusal to file its stipulation in Court appears to be part of Petitioner's unreasonable argument that estoppel is irrelevant to the District Court litigation, as discussed later in this section.

the USPTO has repeatedly considered the same line of argument combining an m-ary optical transceiver reference with a pluggable module reference, albeit with other references. Petitioner has not found any reference that even envisions a pluggable optical transceiver with any degree of complex m-ary signal processing capabilities as claimed in the '181 Patent. The weak merits and redundant arguments weigh against institution.

Under the final *Fintiv* factor, one other circumstance weighs against institution: Petitioner's lack of transparency regarding the real parties-in-interest and Petitioner's attempt to unfairly evade the estoppel provision of 35 U.S.C. § 315(e)(2). Under this provision, the Petitioner and its real parties in interest may not assert "any ground that the petitioner raised or reasonably could have raised during that *inter partes* review" in the district court litigation. Petitioner identifies only Nokia of America Corporation, Nokia Corporation, and Nokia Solutions and Networks OY as real parties in interest. Petition at 76. Patent Owners submit that this is likely incomplete.

At minimum, Petitioner worked with its co-defendants in the litigation (Fujitsu, Infinera, and AT&T) to prepare invalidity contentions. The arguments in the Petition are a subset of such arguments. Thus, at the very least, Fujitsu, Infinera and AT&T coordinated with each other on the substance of the invalidity arguments in the grounds asserted here. Patent Owners also believe Petitioner has coordinated

with its co-defendants directly regarding IPR strategy, including the arguments raised in the Petition.

But when Patent Owners requested real party-in-interest discovery to determine the extent of Fujitsu's, Infinera's, and AT&T's involvement in this petition, Petitioner refused to provide it, instead arguing irrelevance. Ex. 2007, *passim*. When pressed on the issue, Petitioner argues that no such information need be produced because it decided its co-defendants are not real parties-in-interest and because the issue was not relevant to the pending district court litigation. *Id.* at 1–2, 4. But when further pressed about highly relevant issues such as indemnity obligations, work on the IPR, or funding the IPR, Petitioner refused to respond and simply refused to produce the documents. *Id.* at 1. Petitioner suggested that it may use the confidentiality Protective Order in the litigation to shield the Board from knowledge of the true real parties-in-interest even if discovery is produced.[5] *Id.* at 2.

Petitioner's evasiveness and refusal to provide the requested discovery calls into question the veracity of its representations to the Board and should be held against Petitioner. If Petitioner had nothing to hide, Petitioner would have provided the requested information, at the very least, given an unqualified and unambiguous

[5] It is not clear why non-privileged communications between co-defendants would be confidential.

response that no such documents exist. Instead, Petitioner's actions have tacitly admitted to the existence of relevant documents regarding real party-in-interest that suggest that the representation in the Petition may not be accurate.

The real-party-in-interest determination is important for many reasons, including the statutory scope of estoppel. Congress intended for the estoppel provision to prevent real-parties-in-interest from obtaining an unfair second bite at the apple in district court if the party loses at the PTAB. Petitioner's refusal to produce discovery suggests an improper attempt to reserve a second bite through its co-defendants (indeed, one such co-defendant, Infinera, has filed its own petitions making similar but different arguments). Petitioner's tactics in withholding relevant, important information implicates its duty of candor to the USPTO. *See Spectrum Solutions LLC v. Longhorn Vaccines & Diagnostics, LLC*, IPR2021-00860, Paper 107 (PTAB May 3, 2023) (sanctioning party for withholding material information).

Nor is this the first time that Petitioner has withheld relevant information in these proceedings. In *Nokia of America Corp. v. Alexander I. Soto and Walter G. Soto*, IPR2023-00960, Paper 2 at 100 (PTAB June 30, 2023), Petitioner presented a certification of service to the USPTO that Petitioner later learned was false. But when asked to correct its certification, Petitioner refused to do so, forcing Patent Owners to specially appear on short notice to inform the Board of the incorrect certification. *Id.* at Paper 6 at 3-4 (recounting facts in support of moving to dismiss

for lack of service and citing email correspondence). Again, Petitioner's actions call into question its duty of candor. MPEP § 2001; 37 C.F.R. § 1.56.

Petitioner's lack of real-party-in-interest discovery combined with Petitioner's empty promise stipulation, suggests that Petitioner expects that it (or its co-defendants) will be able to raise these same invalidity arguments in the litigation even after a Final Written Decision is issued. The Board should consider this inefficient, duplicative outcome when considering discretionary denial.

VII. Conclusion: The Board Should Deny the Petition

The Board should deny the Petition on the merits because both primary references fail to teach critical claim elements. Alternatively, the Board should deny institution under 35 U.S.C. § 325(d) or *Fintiv* to avoid wasting its limited resources on rehashing the same, extensively-examined combination to write a decision that will not issue until half a year after trial.

Alexander and Walter Soto invented the world's first pluggable, m-ary optical transceiver as recited in the claims. Petitioner failed to find a single reference that describes a pluggable transceiver with the claimed signal processing capabilities. The USPTO issued the '181 Patent after extensive examination, and Petitioner gives no good reason to reexamine it again.

Respectfully submitted,

Dated: August 16, 2023 / Qi Tong /

Qi Tong (Reg. No. 74,292)
RUSS AUGUST & KABAT
4925 Greenville Avenue, Suite 200
Dallas, TX 75206
(310) 826-7474

Attorney for Patent Owners

CERTIFICATION REGARDING WORD COUNT

Pursuant to 37 C.F.R. §42.24(d), Patent Owner certifies that there are 12,648 words in the paper excluding the portions exempted under 37 C.F.R. §42.24(a)(1).

Dated: August 16, 2023

/s/ *Qi Tong*
Qi Tong

CERTIFICATE OF SERVICE (37 C.F.R. § 42.6(e)(1))

The undersigned hereby certifies that the above document was served on August 16, 2023, by filing this document through P-TACTS as well as delivering a copy via electronic mail upon the following attorneys of record for Petitioners:

M. Scott Stevens (Reg. No. 54,762)
scott.stevens@alston.com
Karlee N. Wroblewski (Reg. 76,805)
karlee.wroblewski@alston.com
Matthew M. Welch (Reg. No. 75,429)
matt.welch@alston.com

Date: August 16, 2023

/ Qi Tong /

Qi Tong (Reg. No. 74,292)
RUSS AUGUST & KABAT
4925 Greenville Avenue, Suite 200
Dallas, TX 75206
(310) 826-7474

Attorney for Patent Owners