US 20020181895A1

(19) United States

(12) Patent Application Publication (10) Pub. No.: US 2002/0181895 A1

Gilliland et al. (43) Pub. Date: Dec. 5, 2002

(54) TRANSCEIVER MODULE HAVING VARIABLE VOLTAGE CAPABILITY

(76) Inventors: **Patrick B. Gilliland**, Chicago, IL (US); **Evgueniy D. Anguelov**, River Grove, IL (US)

Correspondence Address:
David L. Newman, Esq.
Stratos Lightwave, Inc.
7444 West Wilson Avenue
Chicago, IL 60706 (US)

(21) Appl. No.: **09/873,077**

(22) Filed: **Jun. 1, 2001**

Publication Classification

(51) **Int. Cl.**[7] **G02B 6/42**

(52) **U.S. Cl.** **385/88**; 385/92; 359/152

(57) **ABSTRACT**

An optoelectronic transceiver module comprising a housing having a first opening at a first end and a second opening at a second end; a printed circuit board mounted within the housing; an electrical connector on the printed circuit board at the first end of the optoelectronic transceiver module, the electrical connector having an insulative mating surface within the first opening and including a first side with electrical contacts in an area oriented substantially parallel to the first side of the insulative mating surface, wherein the electrical contacts slidingly engage a circuit card connector of a host receptacle in order to quickly install and remove the optoelectronic transceiver module from within the circuit card connector; an optical assembly connected to the printed circuit board at the second end of the optoelectronic transceiver module, the optical assembly including a transmitting optical subassembly and a receiving optical subassembly, the second opening allowing the optical assembly to communicate outside of the housing in order for the optical assembly to be coupled with a duplex fiber optic plug providing for bi-directional data transmission over an optical data link; and a voltage converter circuit within the housing having a predetermined internal output voltage consistent with an internal operating voltage of the transceiver module, wherein an external supply voltage varying within a predetermined range received by the voltage converter is converted to the predetermined internal operating voltage of the transceiver module, thereby enabling the transceiver module to operate properly at various external supply voltages.

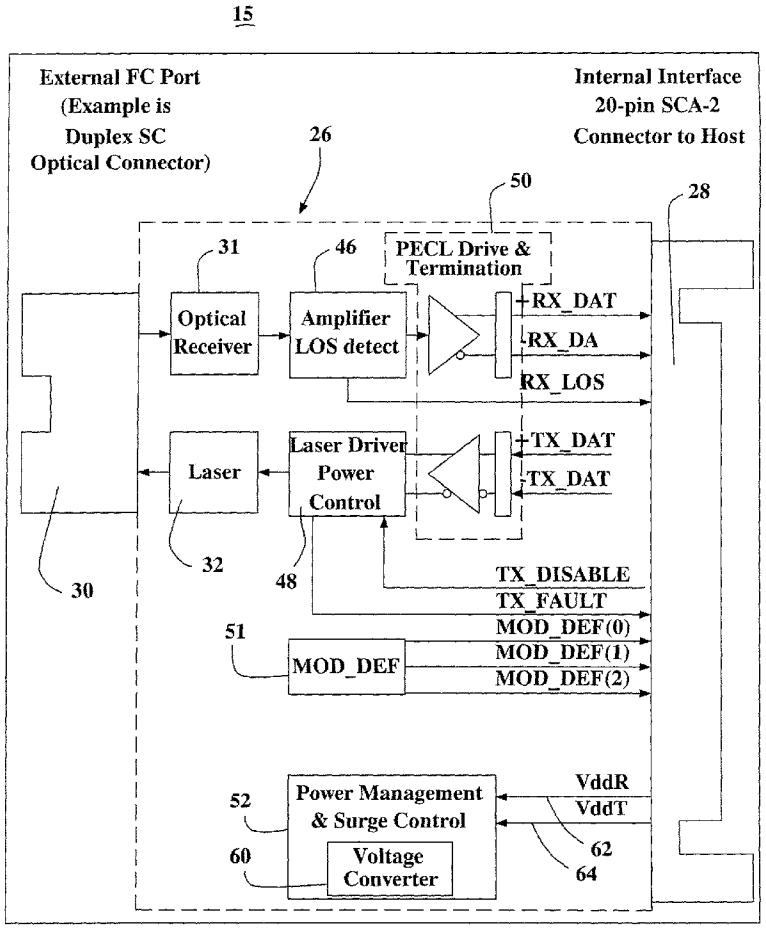

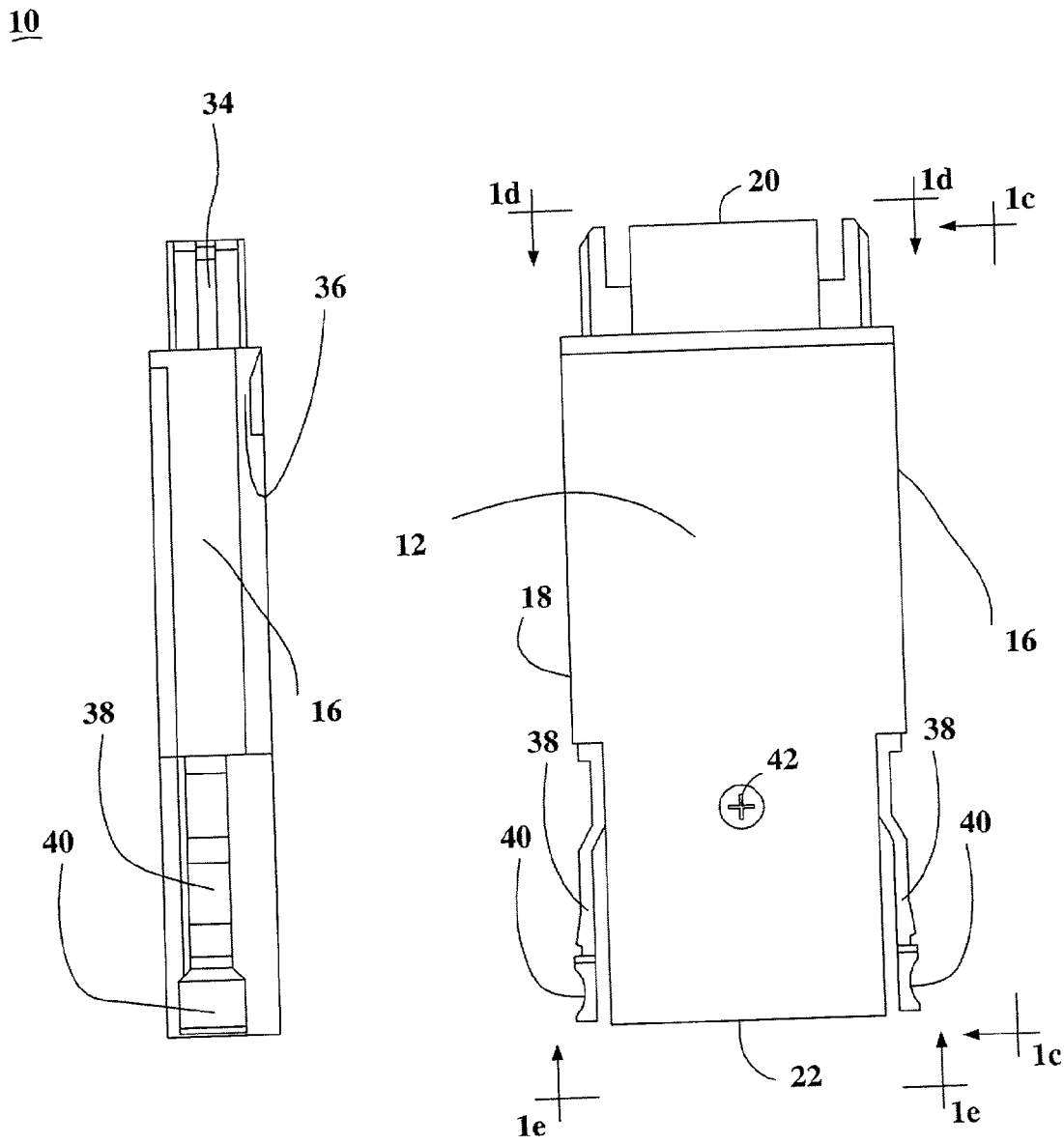

Fig. 1c

Fig. 1a

(PRIOR ART)

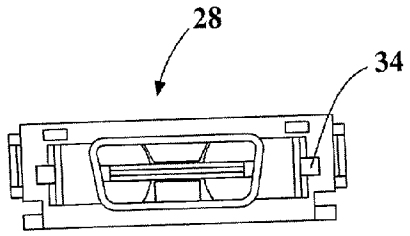

Fig. 1d

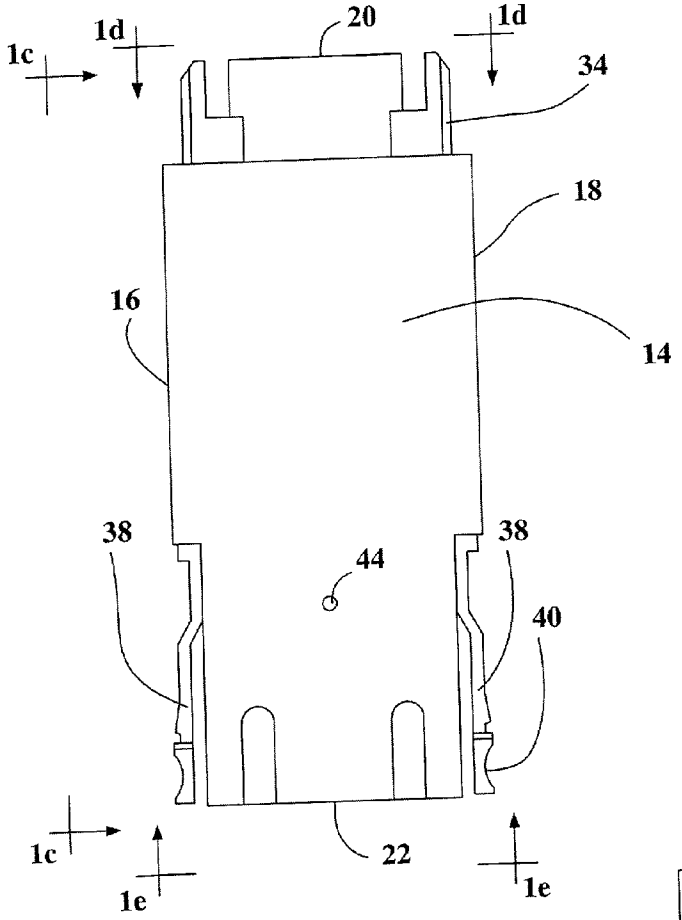

Fig. 1b

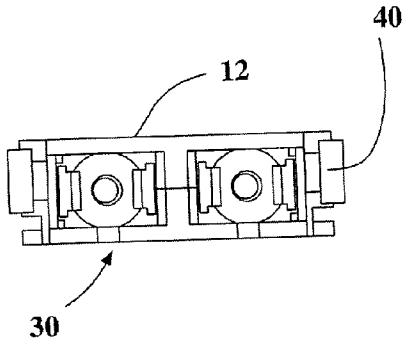

Fig. 1e

(PRIOR ART)

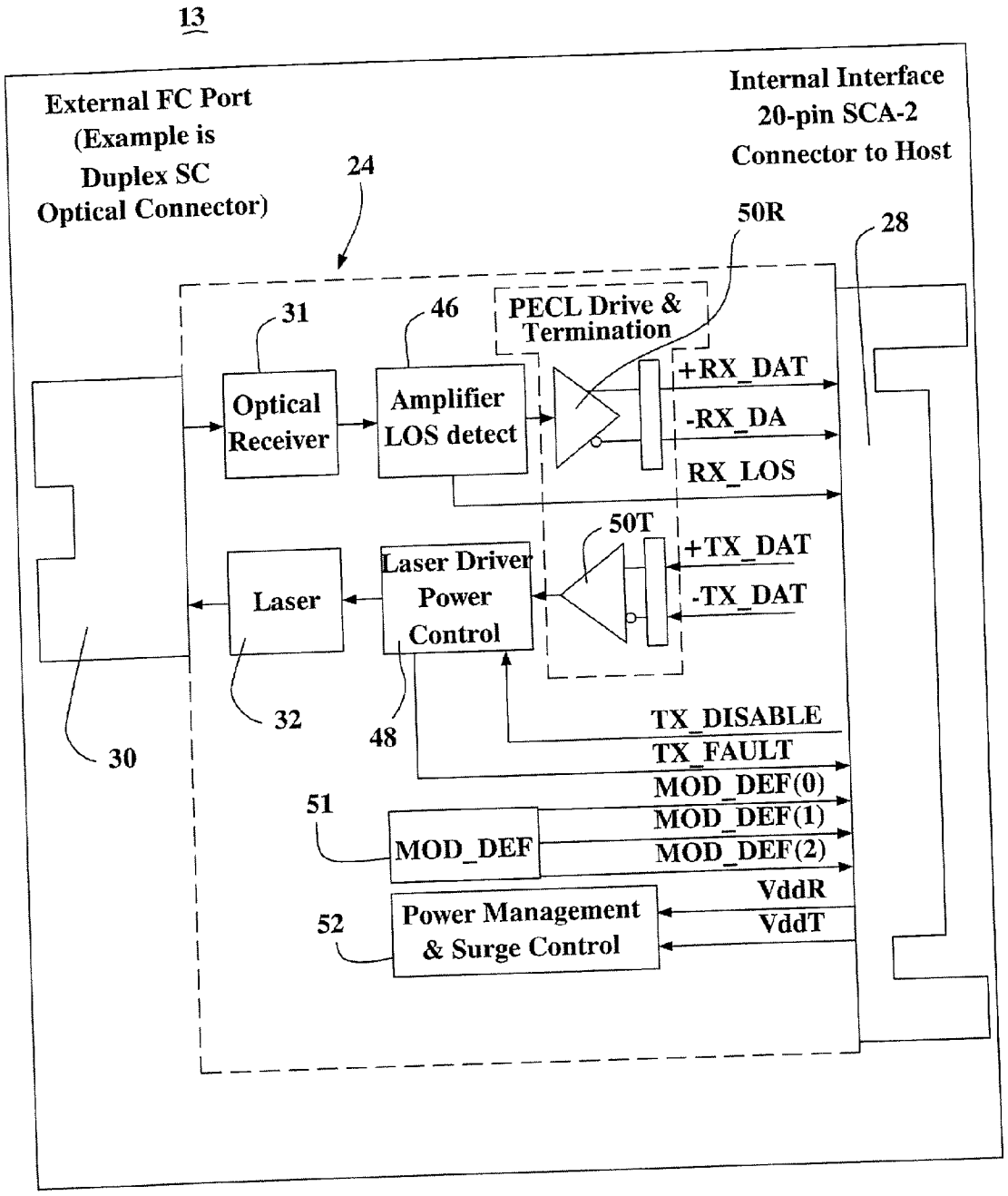

Conventional GBIC Module

Fig. 2

(PRIOR ART)

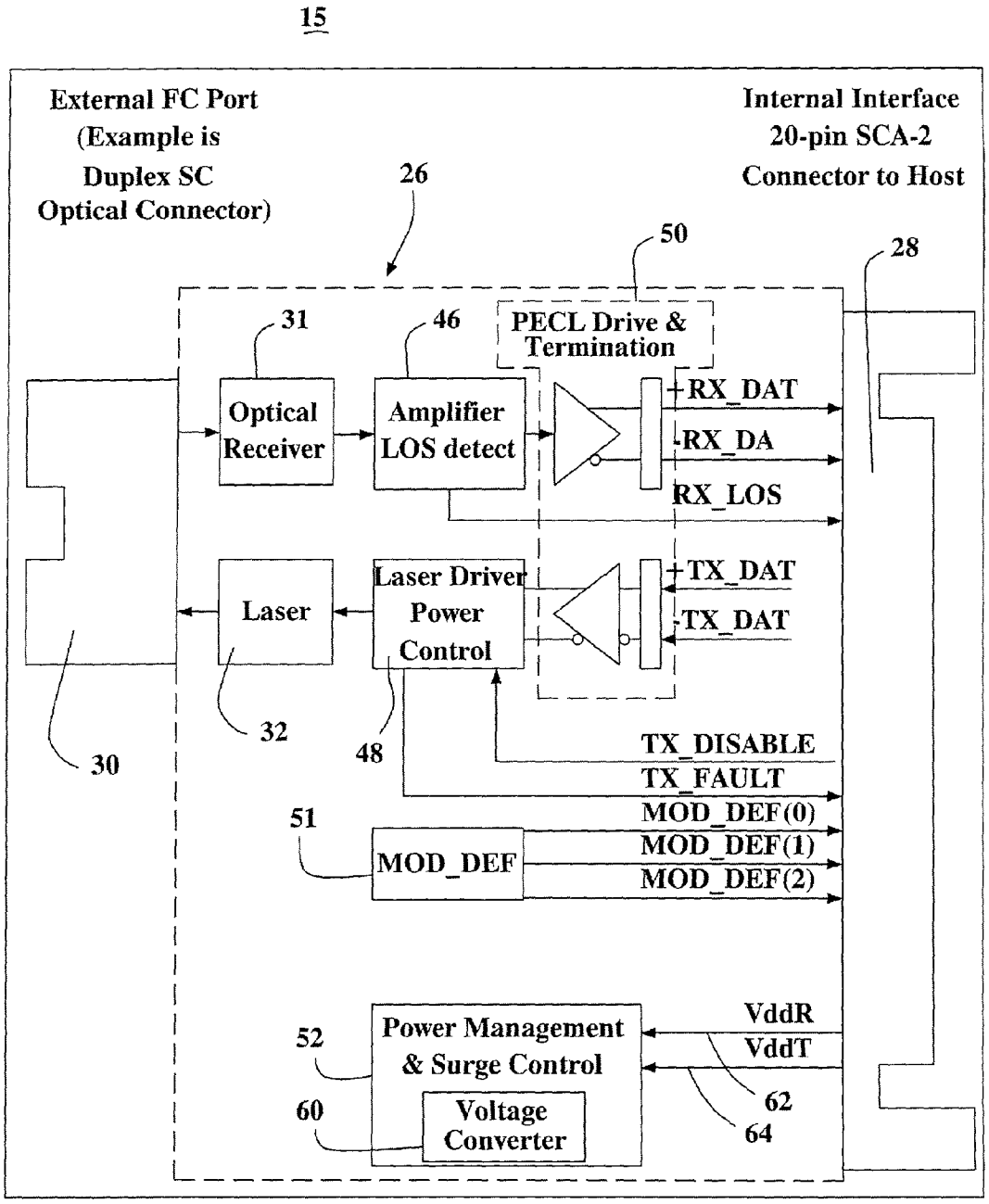
15
External FC Port
(Example is
Duplex SC
Optical Connector)
Internal Interface
20-pin SCA-2
Connector to Host
26
50
28
31
46
PECL Drive &
Termination
Optical
Receiver
Amplifier
LOS detect
+RX_DAT
-RX_DA
RX_LOS
Laser
Laser Driver
Power
Control
+TX_DAT
-TX_DAT
32
48
30
TX_DISABLE
TX_FAULT
51
MOD_DEF(0)
MOD_DEF
MOD_DEF(1)
MOD_DEF(2)
52
Power Management
& Surge Control
VddR
VddT
60
Voltage
Converter
62
64

Fig. 3

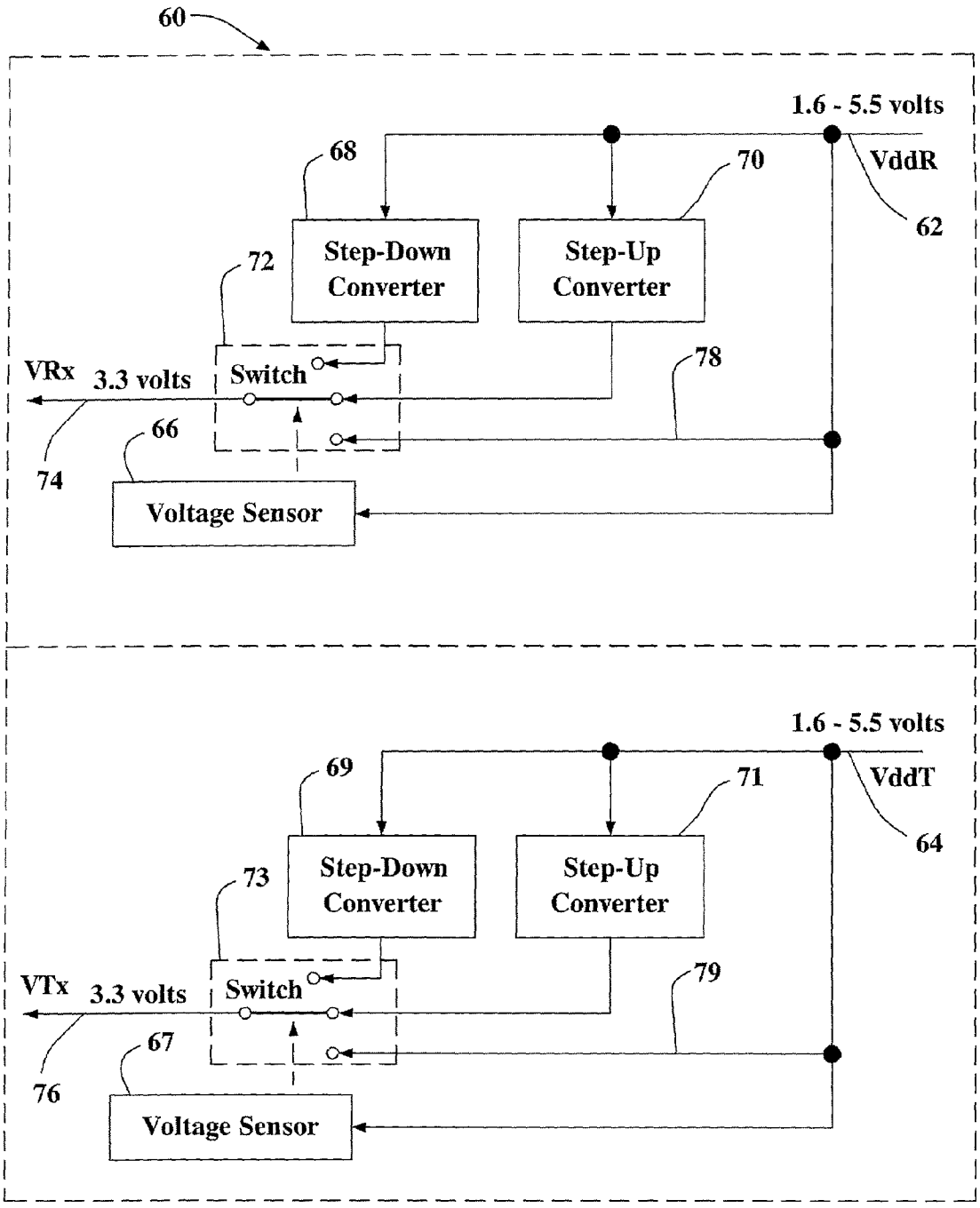

Voltage Converter

Fig. 4

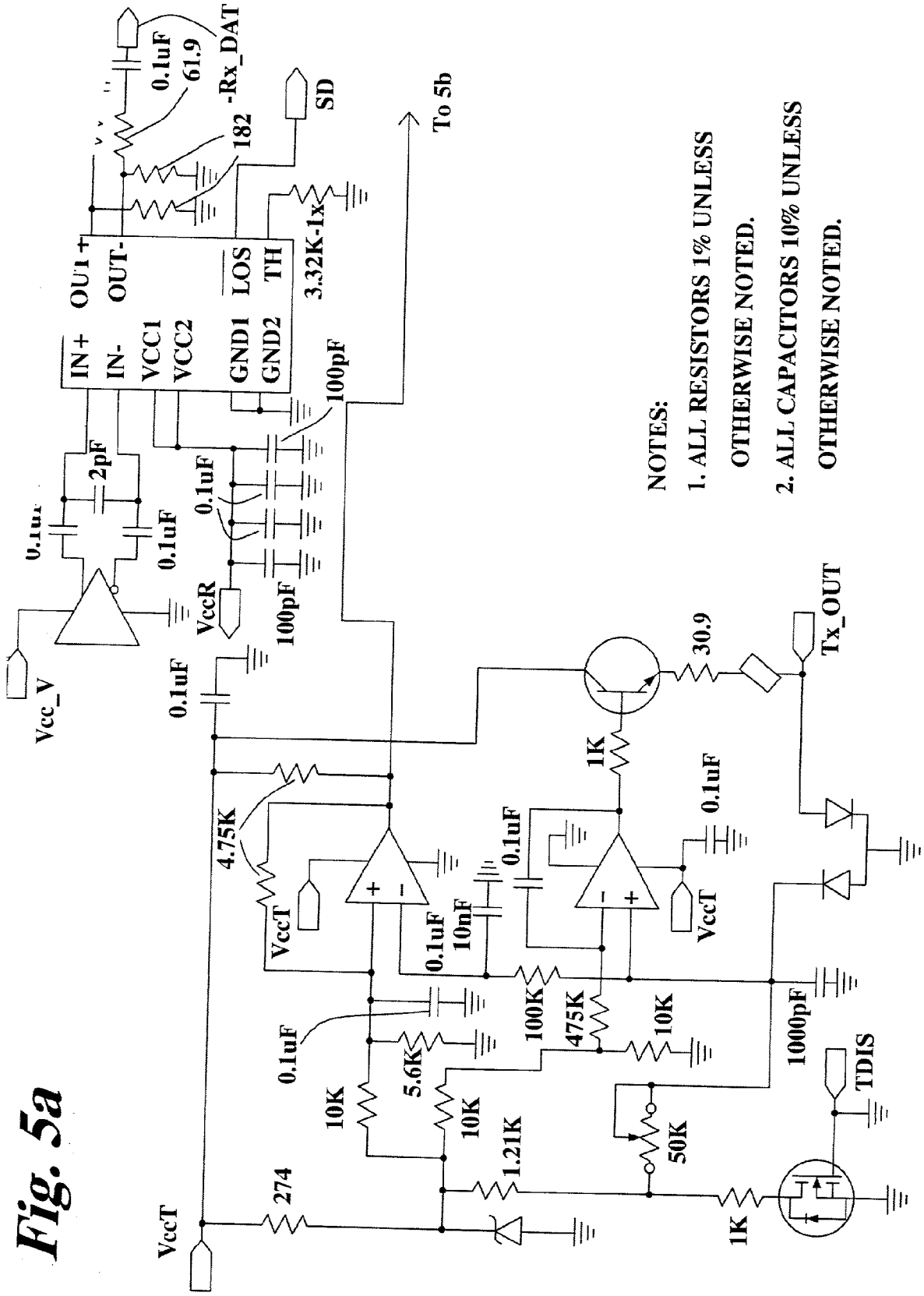
Fig. 5a
NOTES:
1. ALL RESISTORS 1% UNLESS OTHERWISE NOTED.
2. ALL CAPACITORS 10% UNLESS OTHERWISE NOTED.
IN+
IN-
VCC1
VCC2
GND1
GND2
OUT+
OUT-
LOS
TH
SD
-Rx_DAT
To 5b
Tx_OUT
TDIS
VccR
VccT
Vcc_V
0.1uF
2pF
100pF
61.9
182
3.32K-1x
4.75K
30.9
1K
10nF
100K
475K
10K
5.6K
1.21K
50K
274
1000pF

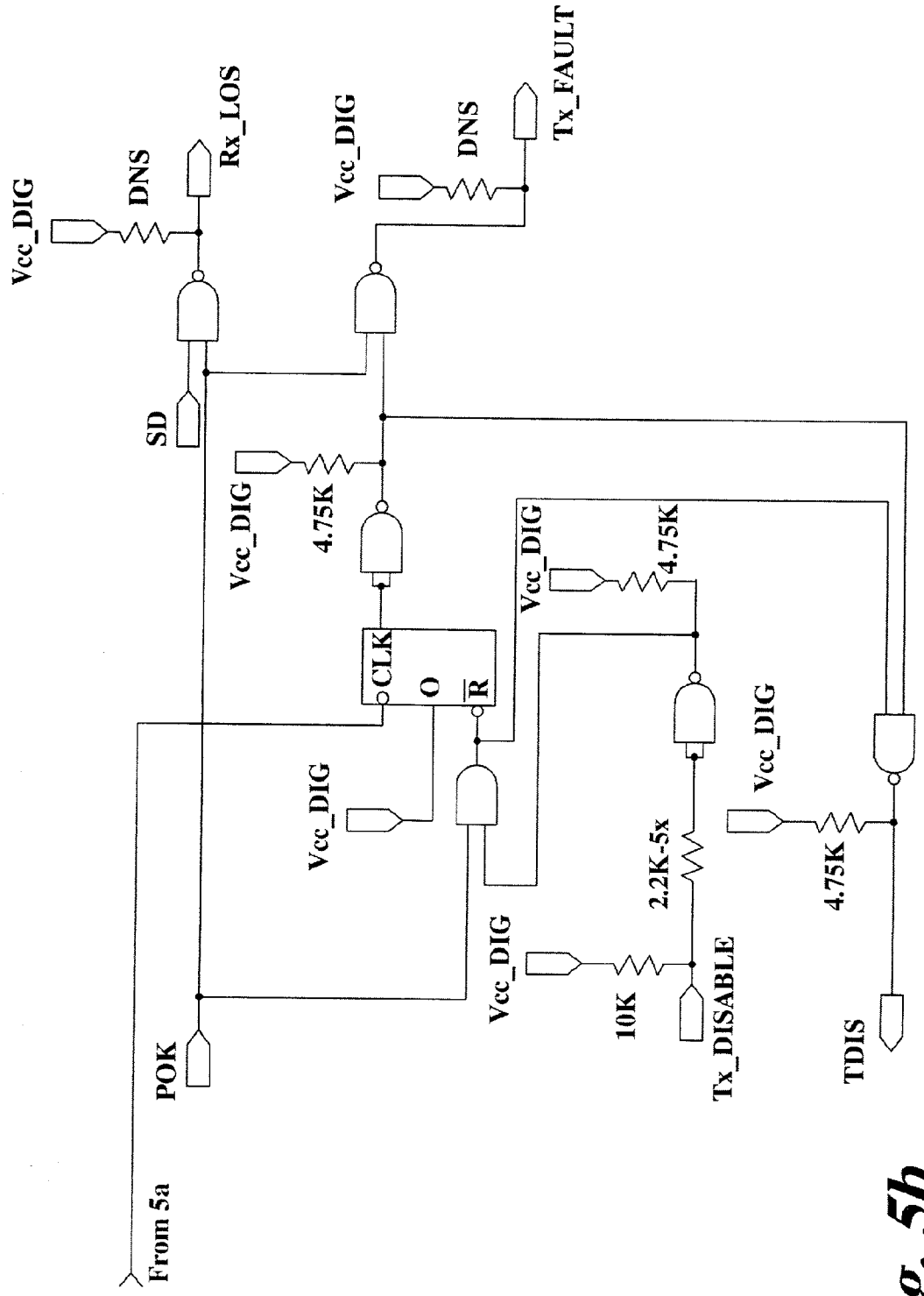
Vcc_DIG
DNS
Rx_LOS
Vcc_DIG
DNS
Tx_FAULT
SD
Vcc_DIG
4.75K
CLK
Q
R
Vcc_DIG
4.75K
Vcc_DIG
Vcc_DIG
2.2K-5x
Vcc_DIG
4.75K
Vcc_DIG
10K
Tx_DISABLE
TDIS
POK
From 5a

Fig. 5b

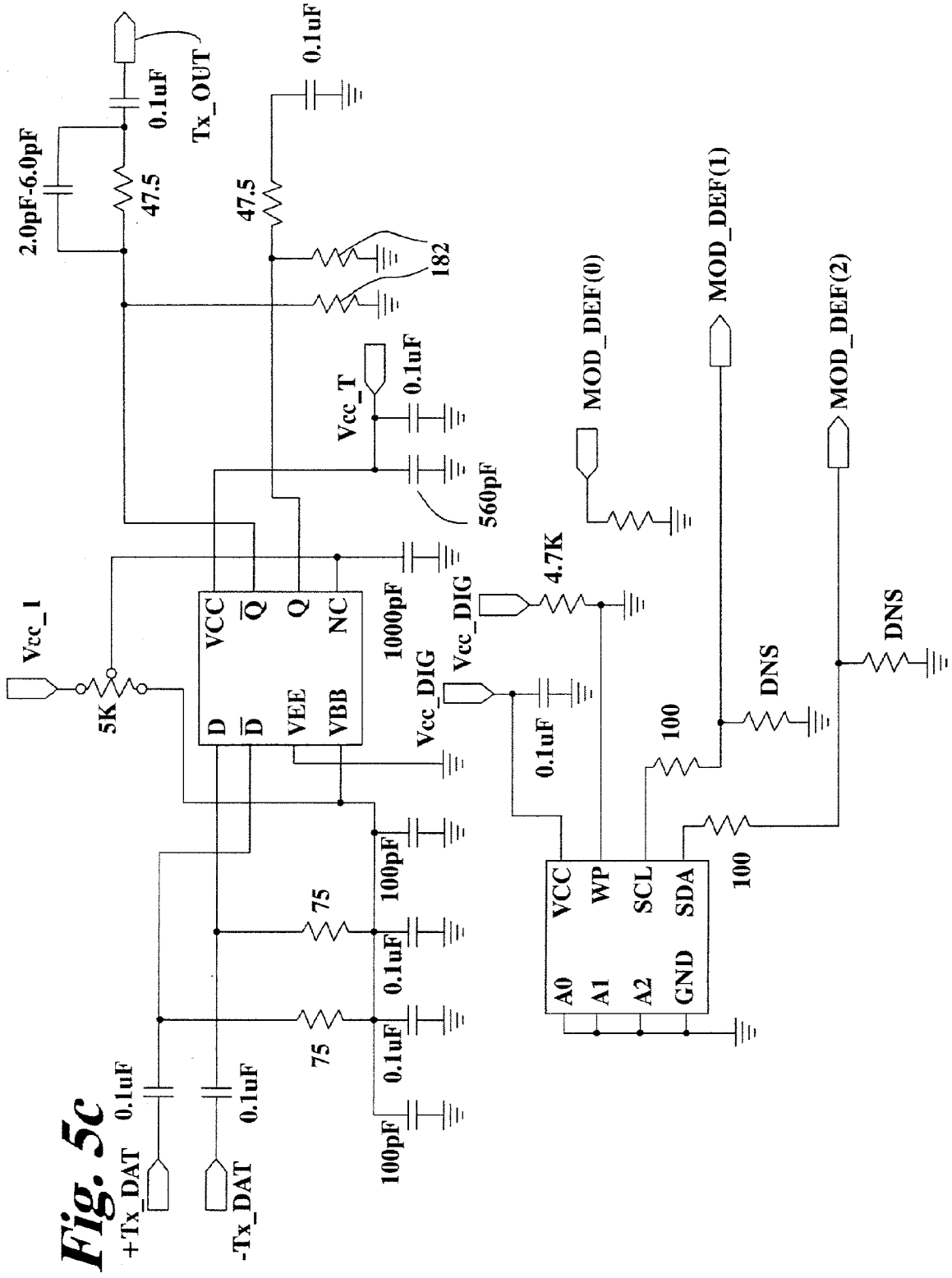
Tx_OUT
0.1uF
2.0pF-6.0pF
47.5
47.5
0.1uF
182
Vcc_T
0.1uF
560pF
MOD_DEF(0)
MOD_DEF(1)
MOD_DEF(2)
Vcc_1
5K
VCC
Q̄
Q
NC
D
D̄
VEE
VBB
1000pF
Vcc_DIG
4.7K
Vcc_DIG
0.1uF
100
DNS
DNS
100
VCC
WP
SCL
SDA
A0
A1
A2
GND
100pF
75
0.1uF
75
0.1uF
100pF
0.1uF
+Tx_DAT
0.1uF
-Tx_DAT

Fig. 5c

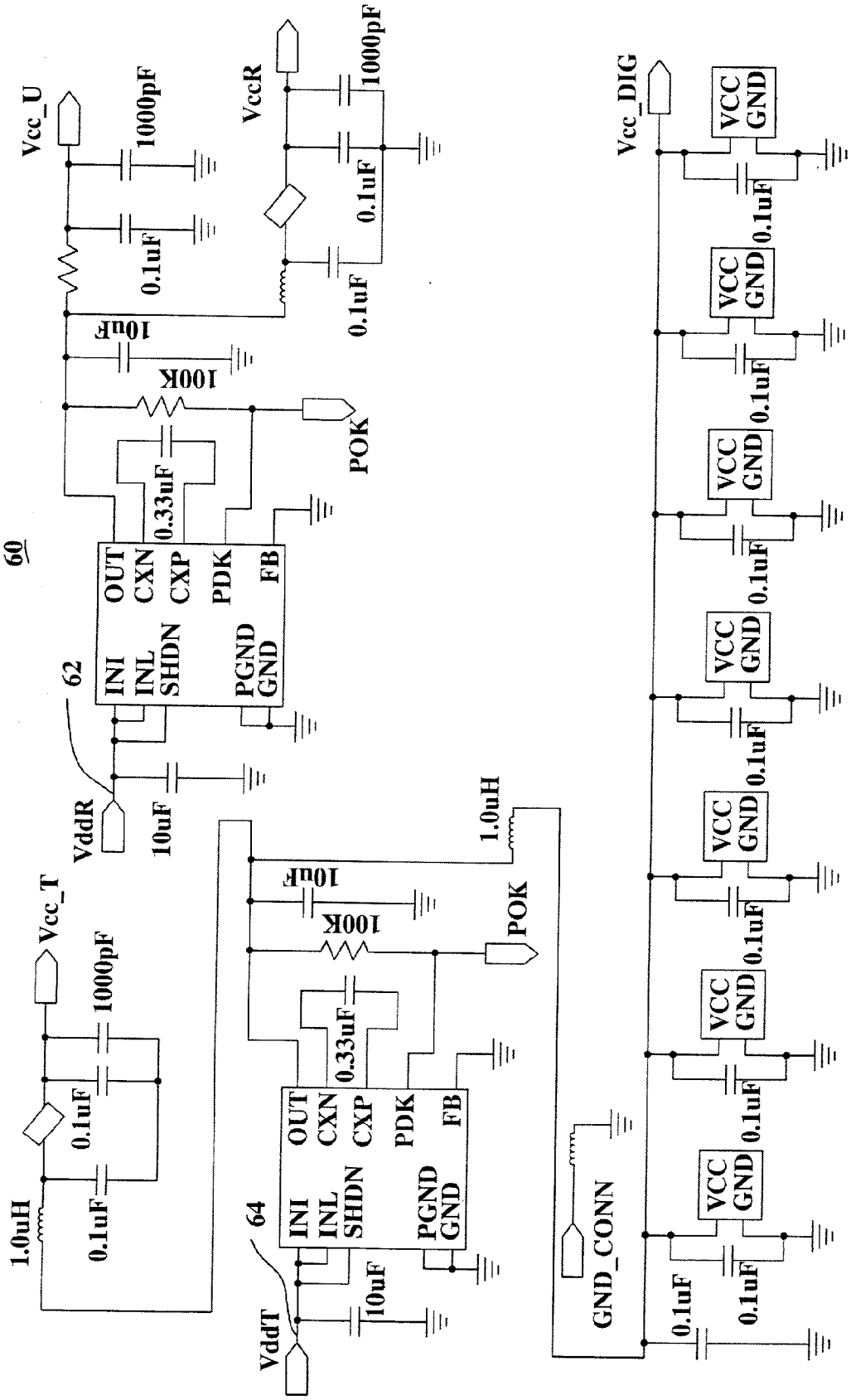
Vcc_U
1000pF
0.1uF
10uF
100K
POK
0.33uF
OUT
CXN
CXP
PDK
FB
INI
INL
SHDN
PGND
GND
60
62
VddR
10uF
VccR
1000pF
0.1uF
0.1uF
Vcc_T
1000pF
0.1uF
0.1uF
1.0uH
1.0uH
10uF
100K
POK
0.33uF
OUT
CXN
CXP
PDK
FB
INI
INL
SHDN
PGND
GND
64
VddT
10uF
GND_CONN
Vcc_DIG
VCC
GND
0.1uF

Fig. 5d

Optoelectronic Products

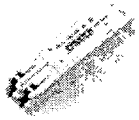

- Small Form Factor (SFF) Board Mounted Transceivers

- Dual (SFF) Transmitters and Receivers

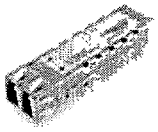

- Quad (SFF) Transmitters and Receivers

- Small Form Factor (SFF) 2x10 SONET/SDH Compliant Board Mounted Transceivers

- 1x9 Board Mounted Transceivers

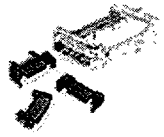

- GBIC Rails and Connectors

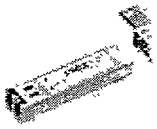

- Small Form Factor Pluggable (SFP) Transceivers

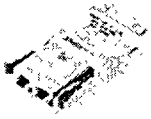

- GBIC Hot Pluggable Transceivers

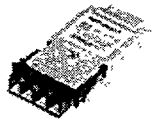

- Dual Port LC Transceivers

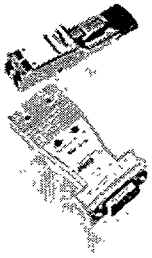

- Media Interface Adapters (MIA)

- Single Port RJ Format Transceivers

- Quad Port RJ Format Transceivers

FIG. 6

TRANSCEIVER MODULE HAVING VARIABLE VOLTAGE CAPABILITY

FIELD OF THE INVENTION

[0001] The present invention relates generally to optical transceiver modules, and more particularly, to a transceiver module capable of operating at variable voltage levels.

BACKGROUND OF THE INVENTION

[0002] Removable serial transceiver modules, such as GBICs, are designed to provide gigabaud capability for Fibre Channel (FC) and other protocols that use similar optical fiber links. In general terms, the GBIC provides an interface between a serial duplex optical interface, such as an FC port, and a serial duplex electrical device such as a serializer/deserializer (SERDES). The electrical connector specified for a GBIC is a 20-pin Single Connector Attachment (SCA-20), which is a male ribbon style connector. GBICs also exist to connect to connect electrical cables to SERDES devices. Therefore a transceiver module can be optical/electrical or electrical/electrical.

[0003] GBICs are designed to be "hot-pluggable," meaning the host system can remain powered on during installation of a GBIC. More detailed information of the GBIC is provided in the "SFF Committee Proposed Specification for GBIC (Gigabit Interface Converter)," Revision 5.5, dated Sep. 27, 2000, which is hereby incorporated by reference.

[0004] Transceiver modules are designed to operate at a set supply voltage level within an acceptable tolerance. In recent years, however, desired supply voltage levels for transceiver modules, such as the GBIC, are changing. For example, a conventional GBIC typically operates at a supply voltage level of 5 volts, with up to 10% tolerance.

[0005] Due to the demand for a continued increase in operating speed, power efficiency, lower power dissipation, and smaller component size, supply voltage levels for transceiver modules are decreasing. For example, some current supply voltage levels are 3.3 volts and 2.5 volts. Of course, additional supply voltage levels and ranges are possible and likely to be developed. Furthermore, it is even possible that some transceiver modules are designed to operate at higher supply voltage levels.

[0006] In order to accommodate these various supply voltage levels, a manufacturer of a transceiver module must know beforehand the desired supply voltage level for a device in order to design the device accordingly. This requires a supplier of transceiver modules to either have multiple designs in stock for each supply voltage level, or design a transceiver module for each unique order of transceiver modules. This process is costly, inefficient, and slows production time.

[0007] It would be far more cost effective, efficient, and decrease production time to have a transceiver module that can operate at various supply voltage levels without having to be modified. In this manner, only one type of transceiver module would need to be produced or held in stock by a supplier in order to accommodate the various supply voltage level demands by customers of transceiver modules.

OBJECTS AND SUMMARY OF THE INVENTION

[0008] An object of the present invention is to provide a single transceiver module that can operate at various supply voltage levels without being modified.

[0009] In that regard, a transceiver module is provided comprising a housing having a first opening at a first end and a second opening at a second end; a printed circuit board mounted within the housing; an electrical connector on the printed circuit board at the first end of the optoelectronic transceiver module, the electrical connector having an insulative mating surface within the first opening and including a first side with electrical contacts in an area oriented substantially parallel to the first side of the insulative mating surface, wherein the electrical contacts slidingly engage a circuit card connector of a host receptacle in order to quickly install and remove the optoelectronic transceiver module from within the host receptacle; an optical assembly connected to the printed circuit board at the second end of the optoelectronic transceiver module, the optical assembly including a transmitting optical subassembly and a receiving optical subassembly, the second opening allowing the optical assembly to communicate outside of the housing in order for the optical assembly to be coupled with a duplex fiber optic plug providing for bi-directional data transmission over an optical data link; and a voltage converter circuit within the housing having a predetermined internal output voltage consistent with a internal operating voltage of the transceiver module, wherein an external supply voltage varying within a predetermined range received by the voltage converter is converted to the predetermined internal operating voltage of the transceiver module, thereby enabling the transceiver module to operate properly at various external supply voltages.

BRIEF DESCRIPTION OF THE DRAWINGS

[0010] **FIG. 1***a* is a plan view of a conventional GBIC housing;

[0011] **FIG. 1***b* is a bottom view of the GBIC housing shown in **FIG. 1***a;*

[0012] **FIG. 1***c* is a side view of the GBIC housing shown in and taken along line **1***c*-**1***c* of **FIGS. 1***a* and **1***b;*

[0013] **FIG. 1***d* is an end view of the GBIC housing shown in and taken along line **1***d*-**1***d* of **FIGS. 1***a* and **1***b;*

[0014] **FIG. 1***e* is an end view of the GBIC housing shown in and taken along line **1***e*-**1***e* of **FIGS. 1***a* and **1***b;*

[0015] **FIG. 2** is a circuit block diagram of a conventional GBIC module;

[0016] **FIG. 3** is a circuit block diagram of a GBIC module configured in accordance with the present invention;

[0017] **FIG. 4** is a circuit block diagram of the voltage converter shown in **FIG. 3**;

[0018] **FIGS. 5A and 5B** are a circuit diagram of a GBIC configured in accordance a preferred embodiment of the present invention; and

[0019] **FIG. 6** illustrates various transceiver modules that may incorporate the voltage converter of the present invention.

DETAILED DESCRIPTION OF THE PREFERRED EMBODIMENTS

[0020] Referring now to the drawings, **FIGS. 1***a*-**1***e* show an outer housing **10** of a conventional GBIC module **13** (**FIG. 3**), capable of incorporating the present invention. A

top **12**, bottom **14**, and sides **16**, **18** are illustrated. A first end **20** and a second end **22** are located at opposing ends of the housing **10**. An electrical connector **28**, such as a 20-pin Single Connector Attachment (SCA), is located at the first end **20** and configured to mate with a host receptacle. An optical connector **30** is located at the second end **22**.

[**0021**] Guide tabs **34** are located on the first end **20** to facilitate inserting the electrical connector **28** into a host receptacle and also provide grounding. Guide slots **36** are included for properly positioning the GBIC housing **10** during insertion into a host receptacle. Release levers **38** are located on sides **16** and **18** in order to secure the GBIC housing **10** within a host receptacle, and then release the GBIC housing **10** from a host receptacle in response to finger grips **40** on the release levers **38** being depressed inward toward the GBIC housing **10**. A metal screw **42** on the top **12** of the housing **10** secures the top **12** and bottom **14** of the housing **10** together by screwing into an aperture **44** in the bottom **14** of the housing **10**.

[**0022**] **FIG. 2** is a circuit block diagram of a prior art GBIC circuit assembly **24** of a GBIC module **13**. The GBIC circuit assembly **24** is located within the GBIC housing **10** to form a GBIC module **13**. Shown are the electrical connector **28** and the optical connector **30**. The optical connector **30** includes the optical receiver **31**, and the optical transmitter includes connectorized laser diode **32**. An amplifier equipped with loss-of-signal (LOS) detector circuitry **46** is coupled to the optical receiver **31**, and a laser driver and automatic power control circuit **48** is coupled to the optical transmitter **32**. A Positive Emitter Coupled Logic (PECL) drive circuit **50**T, a receiver termination circuit **50**R, and a module definition (MOD_DEF) circuit **51** are also illustrated. The power management and surge control circuit **52** distributes power to all circuits internally and protects against external power transient events. The power management and surge control circuit **52** is significant to the present invention, as discussed in regard to **FIG. 3**.

[**0023**] **FIG. 3** is a block diagram of a GBIC assembly **26** in a GBIC module **15** configured in accordance with the present invention. **FIG. 3** is similar to **FIG. 2**, except the power management and surge control circuit **52** includes a voltage converter circuit **60** in accordance with the present invention.

[**0024**] In accordance with the present invention, a voltage converter circuit is included in a GBIC module to adjust power supply voltage levels applied to the GBIC module to a set internal operating voltage. In this manner, the internal operating voltage level of the GBIC module remains the same, regardless of the power supply voltage level. As such, the same GBIC module can function properly at various power supply voltage level environments.

[**0025**] **FIG. 4** is a block diagram of the voltage converter **60** configured in accordance with the present invention. $V_{DD}R$ **62** is to be connected to the external power supply voltage for the optical receiver **31** of the GBIC module **15** (**FIG. 3**). $V_{DD}T$ **64** is to be connected to the external power supply voltage for the optical transmitter **32** of the GBIC module **15**. The external supply voltage on lines $V_{DD}R$ **62** and $V_{DD}T$ **64** can range from 1.6-5.5 volts. In other embodiments, the external supply voltage on lines $V_{DD}R$ **62** and $V_{DD}T$ **64** can range from 1.8-11 volts.

[**0026**] Voltage sensors **66** and **67** monitor the incoming voltages on $V_{DD}R$ **62** and $V_{DD}T$ **64**, respectively. The incoming external supply voltage levels on lines **62** and **64** are also fed into Step-Down Converters **68** and **69**, respectively. Similarly, the incoming voltage levels on lines **62** and **64** are fed into Step-Up Converters **70** and **71**, respectively. The voltage sensors **66** and **67** control switches **72** and **73**, respectively. The switches **72** and **73** determine whether output from the Step-Up Converters **70**,**71** or output from the Step-Down Converters **68**,**69** are to be connected to the internal power lines VR_X **74** and VT_X **76**, respectively. Furthermore, the voltage sensors **66** and **67** determine if the voltage level on lines **62** and **64** are to be fed directly to the internal power lines VR_X **74** and VT_X **76**, respectively. This would occur in the situation wherein the external power supply voltage level on lines **62** and/or **64** are equal to the predetermined internal operating voltage level of the GBIC module **15**, and do not need to be adjusted by the voltage converter **60**.

[**0027**] The Step-Up converters **70**,**71** raise all incoming voltages to the predetermined, internal power supply voltage level. The Step-Down Converters **68**,**69** lower all incoming voltages to the predetermined, internal power voltage lever.

[**0028**] The predetermined or pre-set, internal supply voltage level for the GBIC module **15** is established, such as, 3.3 volts. If the external power supply voltage levels on lines **62** and **64** is above 3.3 volts, the voltage sensors **66**,**67** direct the switches **72**,**73** to connect output from the Step-Down Converters **68**,**69** to internal power lines VR_X **74** and VT_X **76**. If the voltage levels on lines **62** and **64** are below 3.3 volts, the voltage sensors **66**,**67** direct the switches **72**,**73** to connect output from the Step-Up Converters **70**,**71** to internal power lines VR_X **74** and VT_X **76**. If the voltage levels on lines **62** and **64** are equal to 3.3 volts, the voltage sensors **66**,**67** direct the switches **72**,**73** to connect output directly from the lines **62**,**64** to the internal power lines VR_X **74** and VT_X **76** via non-converted lines **78** and **79**, respectively.

[**0029**] It should be noted that it is possible that the external supply voltage level on line **62** is above the internal supply voltage level, and the external supply voltage level on line **64** is below the internal supply voltage level, or vice versa. Furthermore, the voltage level on line **62** may need to be converted and the voltage level on line **64** may not need to be converted, or vice versa. Regardless, the voltage sensors **66** and **67** are capable of independently accommodating any voltage level discrepancy, and setting the switches **72** and **73** appropriately so that the proper voltage level conversions are performed and communicated to internal power supply lines **74** and **76**. This enables the GBIC to operate properly regardless of the different external supply voltage levels on lines **62** and **64**.

[**0030**] **FIGS. 5***a* and **5***b* are a circuit diagram of a GBIC configured in accordance with the present invention. The present invention preferably incorporates commercially available voltage converting devices. **FIG. 5***b* illustrates the voltage converter **60** shown in **FIGS. 3 and 4**. The voltage converter **60** incorporates a commercially available voltage converter integrated circuit (IC), the MAX1759 which is manufactured by Maxim Integrated Products Maxim Integrated Products, Sunnyvale, Calif. The MAX1759 chip provides a regulated output voltage of 3.3 volts in response to an input voltage that varies from 1.6 to 5.5 volts. Maxim Integrated Products also produces a voltage converter chip MAX1672, which provides a fixed output voltage of 3.3

volts in response to an input voltage that varies between 1.8 to 11 volts. Documentation on these chips from Maxim Integrated Products is available to the public via the internet on the web page of Maxim Integrated Products.

[0031] **FIG. 6** illustrates additional transceiver modules that may incorporate the present invention. These devices are manufactured and sold by Stratos Lightwave in Chicago, Ill.

[0032] It is to be understood that the foregoing description is merely a disclosure of particular embodiments and is no way intended to limit the scope of the invention. Several possible alterations and modifications will be apparent to those skilled in the art.

We claim as our invention:

1. An optoelectronic transceiver module, comprising:

a housing having a first opening at a first end and a second opening at a second end;

a printed circuit board mounted within the housing;

an electrical connector on the printed circuit board at the first end of the optoelectronic transceiver module, the electrical connector having an insulative mating surface within the first opening and including a first side with electrical contacts in an area oriented substantially parallel to the first side of the insulative mating surface, wherein the electrical contacts slidingly engage a circuit card connector of a host receptacle in order to quickly install and remove the optoelectronic transceiver module from within the circuit card connector;

an optical assembly connected to the printed circuit board at the second end of the optoelectronic transceiver module, the optical assembly including a transmitting optical subassembly and a receiving optical subassembly, the second opening allowing the optical assembly to communicate outside of the housing in order for the optical assembly to be coupled with a duplex fiber optic plug providing for bi-directional data transmission over an optical data link; and

a voltage converter circuit within the housing having a predetermined internal output voltage consistent with an internal operating voltage of the optoelectronic transceiver module, wherein an external supply voltage varying within a predetermined range received by the voltage converter is converted to the predetermined internal operating voltage of the optoelectronic transceiver module, thereby enabling the optoelectronic transceiver module to operate properly at various external supply voltages.

2. The optoelectronic transceiver module of claim 1, wherein the internal operating voltage is approximately 3.3 volts.

3. The optoelectronic transceiver module of claim 1, wherein the internal operating voltage is approximately 5 volts.

4. The optoelectronic transceiver module of claim 1, wherein the external supply voltage varies from 1.5 to 5.5 volts.

5. The optoelectronic transceiver module of claim 1, wherein the external supply voltage varies from 1.5 to 11 volts.

6. The optoelectronic transceiver module of claim 1, wherein the optoelectronic transceiver module is a small form factor (SFF) configuration.

7. The optoelectronic transceiver module of claim 1, wherein the optoelectronic transceiver module is a 1×9 configuration.

8. The optoelectronic transceiver module of claim 1 wherein the optoelectronic transceiver module is a small form factor pluggable (SFP) configuration.

9. The optoelectronic transceiver module of claim 1, wherein the optoelectronic transceiver module is a GBIC configuration.

10. An optical transceiver module, comprising:

a housing having a first opening at a first end and a second opening at a second end;

a printed circuit board mounted within the housing;

an electrical pin connector on the printed circuit board at the first end of the transceiver module;

an optical assembly connected to the printed circuit board at the second end of the optoelectronic transceiver module, the optical assembly including a transmitting optical subassembly and a receiving optical subassembly, the second opening allowing the optical assembly to communicate outside of the housing in order for the optical assembly to be coupled with a duplex fiber optic plug providing for bi-directional data transmission over an optical data link; and

a voltage converter within the housing having a converter input and a converter output, wherein the voltage converter output outputs a voltage level consistent with a pre-set internal power supply voltage of the optoelectronic transceiver module, the converter input to be connected to an external supply voltage and the voltage converter output is connected to an internal power supply line within the transceiver module, wherein an external supply voltage received by the voltage converter, if required, is converted to the pre-set internal supply voltage level of the transceiver module and transmitted to the internal power supply line of the transceiver module, thereby enabling the optoelectronic transceiver module to operate properly at various external supply voltages.

11. The optoelectronic transceiver module of claim 10, wherein the voltage converter includes a step-up voltage converter and a step-down voltage converter.

12. The optoelectronic transceiver module of claim 10, wherein the voltage converter includes a direct line for passing non-converted voltage levels.

13. The optoelectronic transceiver module of claim 10, wherein the voltage converter includes a switch and a voltage level sensor for directing output of the step-up converter and the step-down converter via the switch.

14. The optoelectronic transceiver module of claim 10, further comprising:

a power management and surge control circuit, and the voltage converter is incorporated into the power management and surge control circuit.

15. A transceiver module, comprising:

a housing having a first end and a second end;

a printed circuit board mounted within the housing;

a first electrical connector having electrical contacts on the printed circuit board at the first end of the transceiver module having a first configuration for mating with a host receptacle;

a second electrical connector on the printed circuit board at the second end of the transceiver module having a second configuration; and

a voltage converter circuit within the housing having a predetermined internal output voltage consistent with an internal operating voltage of the transceiver module, wherein an external supply voltage varying within a predetermined range received by the voltage converter is converted to the predetermined internal operating voltage of the transceiver module, thereby enabling the transceiver module to operate properly at various external supply voltages.

16. The transceiver module of claim 15, wherein the voltage converter includes a step-up voltage converter and a step-down voltage converter.

17. The transceiver module of claim 15, wherein the voltage converter includes a direct line for passing non-converted voltage levels.

18. The transceiver module of claim 15, wherein the voltage converter includes a switch and a voltage level sensor for directing output of the step-up converter and the step-down converter via the switch.

19. The transceiver module of claim 15, further comprising:

a power management and surge control circuit, and the voltage converter is incorporated into the power management and surge control circuit.

20. The transceiver module of claim 15, wherein the second electrical connector is an optical assembly including a transmitting optical subassembly and a receiving optical subassembly allowing the optical assembly to communicate outside of the housing in order for the optical assembly to be coupled with a duplex fiber optic plug providing for bi-directional data transmission over an optical data link.

* * * * *