UNITED STATES PATENT AND TRADEMARK OFFICE

---

BEFORE THE PATENT TRIAL AND APPEAL BOARD

---

NOKIA OF AMERICA CORPORATION,

Petitioner

v.

ALEXANDER SOTO AND WALTER SOTO,

Patent Owner

---

Case: IPR2023-00682

U.S. Patent No. 10,771,181

---

**PETITIONER'S REQUEST FOR REHEARING BY THE DIRECTOR**

Mail Stop PATENT BOARD
Patent Trial and Appeal Board
US Patent and Trademark Office
PO Box 1450
Alexandria, Virginia 22313-1450

# TABLE OF CONTENTS

**I. Introduction ..... 1**

**II. Factual Background ..... 4**

A. OVERVIEW OF THE ART USED DURING PROSECUTION ..... 4
B. OVERVIEW OF THE ART USED IN THE PRIOR IPR ..... 6
C. OVERVIEW OF THE ART USED IN THE CURRENT IPR ..... 6

**III. Legal Standard ..... 8**

**IV. The Board abused its discretion in denying institution under § 325(d) ..... 8**

A. PETITIONER'S COMBINATIONS CANNOT BE CUMULATIVE SOLELY BECAUSE THEY COVER THE SAME LIMITATIONS AS PRIOR COMBINATIONS. ..... 9
B. THE BOARD'S CONCLUSION THAT AGAZZI '640 AND AGAZZI '341 ARE CUMULATIVE OF ART BEFORE THE EXAMINER IS ERRONEOUS AND BASED ON CLEAR FACTUAL ERROR. ..... 10
C. THE BOARD'S CONCLUSION THAT WEI IS CUMULATIVE OF ART BEFORE THE EXAMINER IS ERRONEOUS BECAUSE IT IGNORES MATERIAL DIFFERENCES. ..... 14
D. TO THE EXTENT THE BOARD RELIED ON THE PRIOR IPR TO DENY INSTITUTION, THIS IS LEGAL ERROR. ..... 15

**V. Conclusion ..... 15**

# TABLE OF AUTHORITIES

**CASES** **PAGE(S)**

*Advanced Bionics, LLC v. MED-EL Elektromedizinische Geräte GmbH*,
IPR2019-01469, Paper 6 (PTAB Feb. 13, 2020).....8, 13

*Becton, Dickinson & Co. v. B. Braun Melsungen AG*,
IPR2017-01586, Paper 8 (PTAB Dec. 15, 2017) .....13, 15

*Ericsson Inc. v. Intell. Ventures I LLC*,
901 F.3d 1374 (Fed. Cir. 2018) .....8

*II-VI, Inc. v. Alexander Soto et al.*,
IPR2021-01361, Paper 10 (PTAB Feb. 15, 2022).....6

*Sling TV LLC v. Uniloc 2017 LLC*,
IPR2019-01270, Paper 11 (PTAB Jan. 9, 2020) .....15

*Wolfspeed, Inc. f/k/a Cree, Inc. v. Trs. of Purdue Univ.*,
IPR2022-00761, Paper 13 (PTAB Mar. 30, 2023).....4

**STATUTES**

35 U.S.C. § 325(d) .....passim

**OTHER AUTHORITIES**

37 C.F.R. § 42.71(c),(d).....8

Petitioner respectfully requests Director review of the Board's denial of institution of *inter partes* review under 35 U.S.C. § 325(d) (Paper 10) (the "ID").

## I. INTRODUCTION

Avoiding addressing enumerated material differences between the cited references and prior examination, the Board relied on a non-substantive argument throughout its analysis—that the references are cumulative simply because they cover the same limitations. Paper 10, 21. The Board's primary analysis, therefore, focused on the similarity of the claim limitations covered by the references, rather than on assessing the differing content of the references. The Board's failure to address the actual material differences, especially those specifically identified, when determining whether the art and arguments are substantially similar, is an abuse of discretion. This is especially important when the identified differences materially change the motivation to combine analysis, as is the case here.

For example, the primary references used by Petitioner disclose an optical transceiver module where the transmitter and receiver are on an integrated circuit within the module. This is materially different from the primary reference used by the Examiner that discloses a large rack-mounted OLT with separate and distinct optoelectronic components (transmitter and receiver) connected via coaxial cable that are not on an integrated circuit.

Moreover, the secondary reference used by Petitioner discloses how to

actually package the optoelectronic components (transmitter and receiver) to fit within a pluggable form factor. This is different than the secondary references before the Examiner, which did not. The material differences between the references are highlighted by the demonstrative below.

| | Reference | Disclosure |
|---|---|---|
| **Primary References** | Examiner (Brede) | 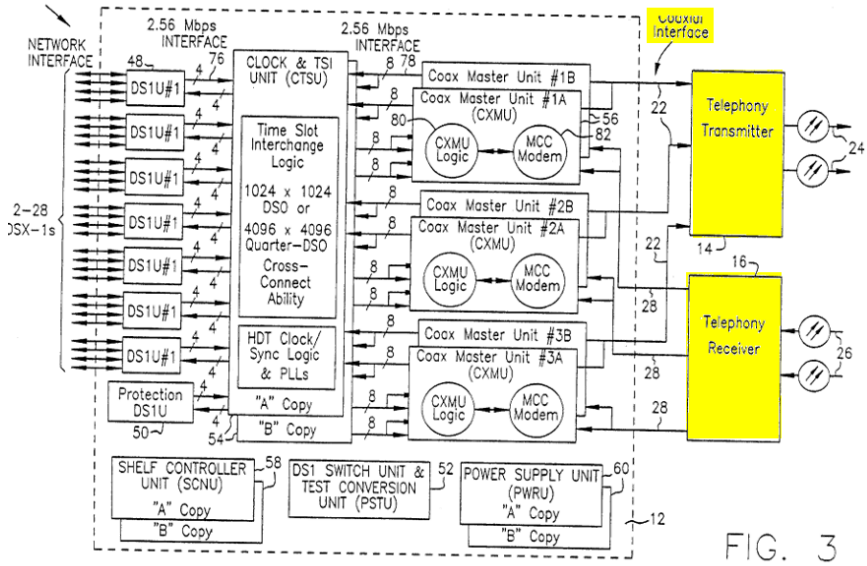 <br>*The transmitter and receiver are not packaged together inside a transceiver optical module on an integrated circuit.* |
| | Petitioner (Agazzi '341) | *FIG.22*<br> 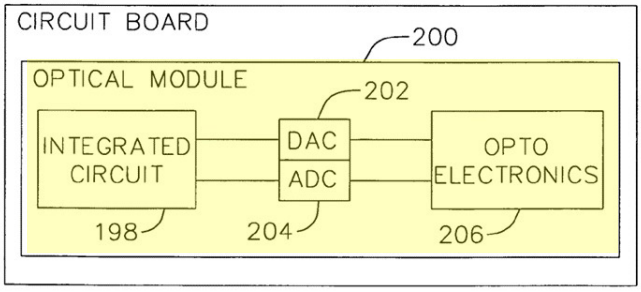 <br>"[T]he transmitter and receiver sections described herein are implemented as a transceiver integrated circuit constructed as a single chip." *See* 4:62-65 |
| | Petitioner (Agazzi '640) | "A series of adaptive multi-carrier modulation transmitters and receivers can be integrated on a single integrated circuit." *See* Abstract |

| | | |
|---|---|---|
| **Secondary References** | Examiner (Aronson) | *Does not disclose how to actually package the transceiver components within a small form factor pluggable module* |
| | Examiner (Sheth) | *Does not disclose how to actually package the transceiver components within a small form factor pluggable module* |
| | Petitioner (Wei) | 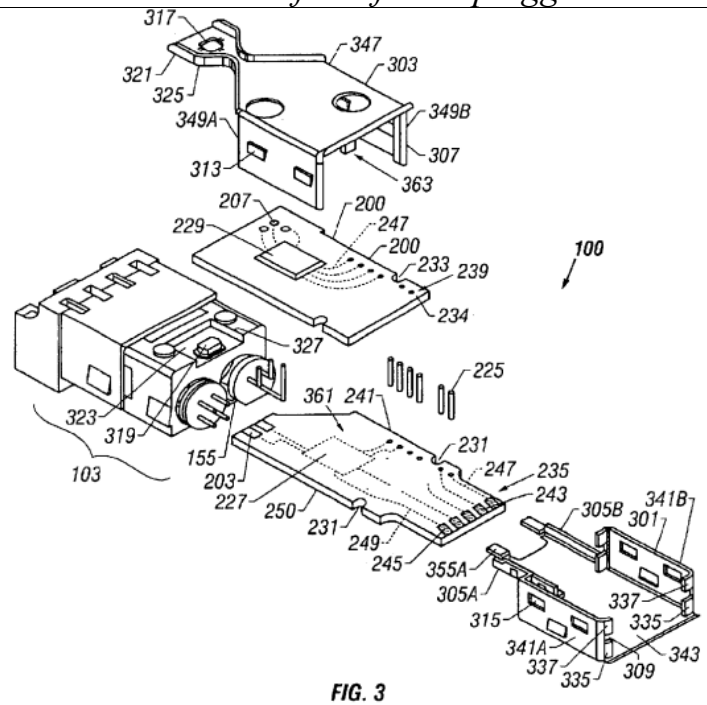 <br>FIG. 3<br>"The electrical element is implemented with vertically stacked receiver and transmitter printed circuit boards. The use of separate vertically stacked printed circuit boards allows packaging the functions of a GBIC within an LC or other small form factor package." *See* 2:27-32 |

The material differences above also present highly important differences in the motivation to combine presented in the Petition—a presentation that is fundamentally different from the motivation to combine that was presented and overcome during prosecution. Thus, not only are the references materially different, but the material differences between the references substantially change the motivation to combine analysis. The Board's failure to address the differences directly contravenes the Director's instructions in *Wolfspeed*, which vacated a

§ 325(d) denial earlier this year explaining that the Board must address and consider material differences especially when the material differences were not in the combination before the Examiner and are "highly relevant when assessing the obviousness grounds" in the Petition. *Wolfspeed, Inc. f/k/a Cree, Inc. v. Trs. of Purdue Univ.*, IPR2022-00761, Paper 13 at 7-8 (PTAB Mar. 30, 2023).

## II. FACTUAL BACKGROUND

### A. Overview of the art used during prosecution

The '181 Patent was solely rejected for nonstatutory double patenting over its parent, U.S. Patent 10,263,723 ("'723 Patent"). Ex. 1002, 76, 124. This was overcome via a terminal disclaimer. *Id.*, 64. There were no rejections of the '723 Patent. Ex. 1026. The '723 patent is a continuation of U.S. Patent No. 9,887,795 ("the '795 Patent"). Ex. 1001. During prosecution of the '795 Patent, there were two rejections. Ex. 1024. In a first rejection, claims 1 and 3-5 were rejected over Brede (Pat. No. 6,603,822), and claim 2 was rejected as obvious over Brede in view of Aronson (Pub. No. 2007/0031153) as Aronson disclosed the specific form factors. Ex. 1024, 174-78. In response, Applicants added claims 6-21 and amended claims 1-5 to include the "pluggable" limitation. Applicants also attempted to distinguish Brede—a rack-mounted OLT with separate and distinct optical elements—from an optical transceiver module with integrated optoelectronics. *Id.*, 174-78, 148-52.

> [T]he **Brede optical elements** (14, 16 of Fig. 3) **are** described as **distinct elements that transmit and receive separately and NOT as**

> **a transceiver as in Applicants' claims**. Additionally, **these optical elements** (14, 16) **are connected to the OLT 12 via a coaxial cable** interface (22, 28), again distinguished as distinct from the OLT 12 and **again NOT as a pluggable optical transceiver module as in the Applicants' claims**.

*Id.*, 153 (emphasis added).

In the second rejection, claims 1, 3-7, and 10-21 were rejected over Brede, and claims 2 and 8-9 were rejected as obvious over Brede in view of Sheth (Pat. No. 7,729,617). *Id.*, 121-28. Applicants then further distinguished the OLT in Brede:

> [T]he HDT is a rack mounted unit that is securely mounted using eight screws to the metal frame of a shelf of a rack … **Brede's optical transmitters 14 and optical receivers 16 are yet more rack mounted units** that connect to the HDT 12 via coaxial cables 22, 28 respectively, and importantly that **none of these references refer to [sic] this entirety of rack mounted units as a pluggable optical transceiver, nor even just an optical transceiver** as in the Examiner's interpretation, on the contrary these references teach away from this interpretation.

*Id.*, 70 (emphasis added). Applicants also argued the motivation to combine Brede (rack-mounted OLT with separate and distinct optical elements) with Sheth (pluggable form factor) was insufficient because the network interface supported by Brede was not supported by Sheth. *Id.*, 72-73. This specific argument, solely directed to why Brede and Sheth would not have been combined in view of the 2-28 DSX-1 network, appears to have persuaded the Examiner (there was no explanation in the

notice of allowance) as the Examiner allowed the claims after this response. *Id.*, 56.

### B. Overview of the art used in the prior IPR

In a prior IPR, the Board denied institution under 35 U.S.C. § 325(d). In that prior IPR, petitioner asserted two main combinations: (1) Brede and Halgren and (2) Raghavan and Richard. The first combination included the same Brede reference used by the Examiner to reject the application. *II-VI, Inc. v. Alexander Soto et al.*, IPR2021-01361, Paper 10 at 24 (PTAB Feb. 15, 2022). As the Board made clear, "there is no dispute that Brede itself was involved during examination, and that portions of it were expressly cited by the Examiner in multiple Office Actions." *Id.* The Board also noted that Raghavan was used in the same manner as Brede, and that Halgren and Richard were both used to disclose the pluggable form factor as were the secondary references used by the Examiner. *Id.*, 29-31.

### C. Overview of the art used in the current IPR

Petitioner asserted two main combinations in the current Petition: (1) Agazzi '640 and Wei and (2) Agazzi '341 and Wei. No reference from the Petition was cited or used by the Examiner during prosecution of the '181 Patent, nor was any reference used in the prior IPR. Paper 1, 66. Petitioner made it clear how the references in the Petition differed substantively from the prior art used during prosecution. *Id.*, 66-71.

> [T]he primary prior art references used in this Petition disclose an optical transceiver module with integrated optoelectronics, as claimed by the '181 Patent, rather than an OLT device, as disclosed in the

> primary prior art reference used by the Examiner . . . . Unlike the OLT disclosed in Brede, with optical elements separate and outside the OLT device, the primary references in this Petition (Agazzi '640 and Agazzi '341) each discloses an optical transceiver module where the transmitter and receiver optoelectronics are integrated within the transceiver module [], which the Applicants explained was what was meant by the claimed "optical transceiver module" limitation.

Paper 1, 67-68. Petitioner then argued that "[t]his would have changed the motivation-to-combine analysis as the Applicants successfully traversed the rejections by arguing that the OLT of Brede was not akin to an optical transceiver module with integrated optoelectronics—an argument that cannot be used to overcome Agazzi '341 and Agazzi '640." *Id.*, 69. Petitioner then explained how Wei differed from the secondary references used by the Examiner and argued that this difference further changed the motivation to combine analysis—making the motivation to combine Agazzi '640 or Agazzi '341 with Wei much stronger.

> Moreover, the Examiner never had a reference that disclosed how to efficiently package the optoelectronics, such as the optoelectronics in Agazzi '341 and Agazzi '640, to fit within a pluggable form factor. The Examiner used Aronson and Sheth to cover the pluggable limitation in rejections, but neither teach how to efficiently package the transceiver components within a pluggable form factor as disclosed in Wei. For example, Wei discloses "separate vertically stacked printed circuit boards allows packaging the functions of [larger modules] within an LC or other small form factor package" like the SFP … This would have

> changed the motivation to combine calculus as a POSITA would have better understood how to package the functionality of modules like Agazzi '640 and Agazzi '341 into an SFP package.

Paper 1, 69-70.

## III. LEGAL STANDARD

Director review of an institution decision is limited to decisions presenting (a) an abuse of discretion or (b) important issues of law or policy. 37 C.F.R. § 42.71(c),(d); *see Ericsson Inc. v. Intell. Ventures I LLC*, 901 F.3d 1374, 1379 (Fed. Cir. 2018) (stating that the Board abuses its discretion when its decision "is based on an erroneous conclusion of law" or "rests on clearly erroneous fact finding").

## IV. THE BOARD ABUSED ITS DISCRETION IN DENYING INSTITUTION UNDER § 325(d)

Under the first prong of the *Advanced Bionics* framework, the Board failed to consider material differences in the references presented that are critical to the motivation to combine analysis. Moreover, the Board relied on clear factual errors to arrive at erroneous conclusions and neglected Petitioner's arguments. Indeed, the Board erroneously adopted the view that "a first reference cited for electrical signal processing components combined with a second referenced cited for pluggable form factors" had already been addressed and overcome. Paper 10, 21. But this generic view, standing alone, is insufficient to deny institution under § 325(d) and would lead to bad legal policy effectively precluding review of a widely asserted patent.

### A. Petitioner's combinations cannot be cumulative solely because they cover the same limitations as prior combinations.

The Board's primary analysis focused on the similarity of the claim limitations covered by the references, rather than on the references themselves. The Board's failure to address the material differences of the references, and the related motivation to combine when determining whether the art and arguments are substantially similar, is an abuse of discretion.

For the motivation, Petitioner relies on primary references that teach an optical transceiver module with integrated optoelectronics combined with a secondary reference that teaches how to package the optoelectronics within a pluggable. Paper 1, 66-71. As the industry was moving towards high throughput pluggables, Petitioner explained that a POSITA would have looked at the optical transceiver modules on an integrated circuit with m-ary capability in Agazzi '341 and Agazzi '640 and combined it with Wei which teaches how to package the optoelectronics to fit within a pluggable. Ex. 1006, 1:60-2:4; Paper 1, 12. This differs from the motivation to combine the large rack-mounted OLT with separate and distinct optoelectronics (Brede) inside a pluggable reference (Sheth and Aronson) that did not disclose how to actually package the optoelectronics. Paper 1, 66-71. Tellingly, Patent Owner does not refute that the motivations are different. Paper 6, 39-52.

The Board's reasoning runs directly counter to the Director's guidance in *Wolfspeed*. In vacating a denial under § 325(d) earlier this year, the Director

explained that the Board must address and sufficiently consider material differences, especially when the material differences were not in the combination before the Examiner and are "highly relevant when assessing the obviousness grounds" in the Petition. *Wolfspeed*, at 7-8. This is the case here as the Examiner did not have references with these material differences—material differences that Petitioner explained were important to the motivation to combine. Paper 1, 66-71.

The Board's improper focus on the similarity of the claim limitations covered by the references, rather than on the actual similarity of the references, would lead to bad legal policy as petitioners would be forced to overcome an additional filing requirement that is divorced from any regulation. Specifically, petitioners would have to ensure the primary and secondary references used in the IPR covered different claim limitations than any primary and secondary references previously before the Examiner, regardless of any material differences between the references.

Moreover, as explained below, the Board's only substantive argument—which pertains only to Agazzi '640 and Agazzi '341—is based on clear factual error. Regardless, the Board never addressed the material differences in Wei or the differing motivations. Either of which is sufficient to vacate the ID. *Wolfspeed*, at 7.

### B. The Board's conclusion that Agazzi '640 and Agazzi '341 are cumulative of art before the Examiner is erroneous and based on clear factual error.

Agazzi '640 and Agazzi '341 are materially different from and not cumulative

of art previously before the Examiner because, as Petitioner explained, the Examiner never used a primary reference that disclosed an optical transceiver module with optoelectronics on an integrated circuit during prosecution. Paper 1, 67-69. The Board overlooked these differences that undeniably impact the combinability of the references.[1]

In its POPR, Patent Owner stated that Agazzi '341 was a continuation-in-part of U.S. Patent Pub. No. 2001/0035997 ("cited Agazzi"), that the two references are "inherently cumulative," and that "the Examiner considered [cited Agazzi] during examination." Paper 6, 43. The Board, in relying on Patent Owner's statements, held that "the Examiner's specific citation of [cited Agazzi] belies Petitioner's argument that 'the Examiner never had a reference with integrated optoelectronics.'" Paper 10, 22. This statement is false and underscores the error made in the ID.

Agazzi '341 is materially different and not inherently similar to cited Agazzi because cited Agazzi does not disclose an optical transceiver module with integrated optoelectronics. While a few figures overlap, the specification, most figures, and the

---

[1] The PTAB previously upheld an Examiner's rejection of similar claims in a related case highlighting the need to analyze the specifically cited references and the specific motivation to combine, which was not done in the ID. Ex. 2002, 25-29.

claims are quite different. *Compare* Ex. 1009, *with* Ex. 2005. And, importantly, cited Agazzi does not disclose an "optical transceiver module." *Compare* Ex. 1009, 3:34-36; *with* Ex. 2005. Cited Agazzi also does not disclose a transceiver that includes the transmitter and receiver packaged together on the same integrated circuit. But, as Petitioner explained, Agazzi '341 does disclose this as shown in Figure 22 below. *Compare* Ex. 1009, Fig. 22; *with* Ex. 2005, Figs. 1-14. Tellingly, Petitioner cited to Agazzi '341's integrated optical module as support for its motivation to combine. *See* Paper 1, 41-45.

*FIG. 22*

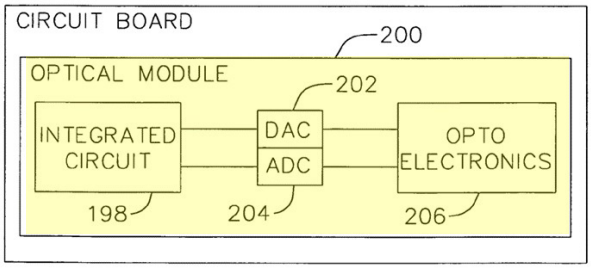


In fact, the difference between Agazzi '341 and cited Agazzi—an optical transceiver module with optoelectronics on an integrated circuit—is the exact difference that Petitioner argued distinguished Agazzi '341 from the primary reference before the Examiner. Paper 1, 67-69. This makes the Board's conclusion erroneous because Agazzi '341 and cited Agazzi cannot be inherently similar. Paper 10, 22.

Moreover, any argument that cited Agazzi was before the Examiner is of no moment. Cited Agazzi was never cited or relied upon by the Examiner, Agustin Bello, during prosecution, and it does not appear on the face of the '181 Patent. Ex.

1001. While cited Agazzi was cited by a different Examiner, Hanh Phan, during prosecution of a distant relative (U.S. Patent Appl. No. 11/772,187) to the ’181 Patent, the claims in the distant relative, which was eventually abandoned, are very different. Ex. 2001, 33. For example, unlike the “pluggable optical transceiver module” claimed in the ’181 Patent, the distant relative claimed a transceiver for an optical line terminal (OLT). Ex. 1001, cl. 1; Ex. 2001, 13-17. Tellingly, a “pluggable” transceiver was never claimed in the distant relative before it was abandoned. Ex. 2001, 13-17.

Regardless, no Examiner ever considered Agazzi ’341, or Agazzi ’341 in combination with Wei. *Advanced Bionics, LLC v. MED-EL Elektromedizinische Geräte GmbH*, IPR2019-01469, Paper 6 at *7-8 (PTAB Feb. 13, 2020) (precedential) (“Under § 325(d), the art and arguments must have been previously presented to the Office.”). Nor was cited Agazzi or Agazzi ’341 ever used as the basis for any rejection in the ’181 Patent or its related family members. *Becton, Dickinson & Co. v. B. Braun Melsungen AG*, IPR2017-01586, Paper 8 at 17 (PTAB Dec. 15, 2017) (precedential) (considering “whether the prior art was the basis for rejection” in deciding whether to deny under § 325(d)).

The Board provides no other substantive analysis explaining how and why Agazzi ’341 or Agazzi ’640 are cumulative. Because the Board relied solely on incorrect facts to conclude that Agazzi ’341 and Agazzi ’640 are cumulative of art

previously before the Examiner, the Board's denial is an abuse of discretion.

### C. The Board's conclusion that Wei is cumulative of art before the Examiner is erroneous because it ignores material differences.

Wei is not cumulative because the Examiner never had a secondary reference that disclosed how to package the optoelectronic components inside a pluggable form factor during prosecution. Paper 1, 69-71. This is a key difference between Wei and the other references and is paramount to the motivation to combine analysis, which Applicants stated was lacking during prosecution. Ex. 1024, 72-73. Tellingly, the Board never addressed this material difference raised by Petitioner. Instead, the Board summarily dismissed Wei in two sentences because it was used "in the same manner" as prior references—to disclose the pluggable form factor. Paper 10, 23. The Board's conclusion is wrong and violates the director's guidance in *Wolfspeed*. *Wolfspeed*, at 7-8.

First, the Board failed to respond to Petitioner's argument that Wei is materially different because it does more than just disclose a pluggable form factor—it discloses how to package the optoelectronic components within the pluggable form factor. Paper 1, 69-71. For example, Wei teaches that "vertically stacked receiver and transmitter printed circuit boards" allows packaging the functions of larger transceivers into smaller pluggable form factors. Ex. 1006, 2:28-35. Wei also includes engineering drawings in Figures 1-5 that show how to actually package optoelectronic components within a pluggable. Ex. 1006, Figs. 1-5. This was a key

difference missing in the other references during Examination.

Second, by failing to address this difference, the Board neglected the fact that Wei's disclosure is also highly relevant to the motivation to combine analysis as Petitioner relied on Wei for more than just the pluggable limitation. Petitioner also relied on Wei's disclosure of how to package the optoelectronic components as a primary factor for why a POSITA would be motivated to combine the optical transceiver module in Agazzi '640 and Agazzi '341 within the pluggable form factor taught by Wei. Paper 1, 10-14, 41-45. This motivation was lacking in the references before the Examiner during prosecution and is a key difference.

### D. To the extent the Board relied on the prior IPR to deny institution, this is legal error.

To the extent the Board relied on the prior IPR— which was denied under § 325(d)—to deny institution here, this was legal error. The Board has previously declined to apply § 325(d) when there was no final written decision in the prior IPR. *Sling TV LLC v. Uniloc 2017 LLC*, IPR2019-01270, Paper 11 at 17-20 (PTAB Jan. 9, 2020) ("An earlier preliminary consideration by the Board in determining whether to institute a trial is not a sufficient demonstration that the reference was previously considered so as to satisfy *Becton*, *Dickinson* or the statute.").

## V. CONCLUSION

In view of the errors discussed above, Petitioner respectfully requests that the Board vacate the § 325(d) denial and institute *inter partes* review.

Date: December 4, 2023

By: / M. Scott Stevens /

M. Scott Stevens
Reg. No. 54,762
**ALSTON & BIRD LLP**
Vantage South End
1120 South Tryon Street, Suite 300
Charlotte, NC 28280-4000
Phone: 704.444.1025
Fax: 704.444.1935
Email: scott.stevens@alston.com

*Attorney for Petitioner*

## CERTIFICATE OF SERVICE

The undersigned certifies that Petitioner served a copy of the foregoing PETITIONER'S REQUEST FOR REHEARING BY THE DIRECTOR by filing this document through the PTAB's P-TACTS Filing System as well as sending a copy via electronic service (as agreed by counsel for Patent Owners) on the following:

| **Lead Counsel** | **Back-Up Counsel** |
|---|---|
| Qi (Peter) Tong<br>Reg. No. 74,292<br>Russ August & Kabat<br>4925 Greenville Avenue,<br>Suite 200<br>Dallas, TX 75206<br>Phone: (310) 826-7474<br>Fax: (310) 826-6991<br>ptong@raklaw.com<br>rak_nextgen@raklaw.com | Irene Y Lee (Reg. No. 54,259)<br>Benjamin T. Wang<br>Andrew D. Weiss<br>Paul A. Kroeger<br>Russ August & Kabat<br>12424 Wilshire Blvd., 12th Fl.<br>Los Angeles, CA 90025<br>Phone: (310) 826-7474<br>Fax: (310) 826-6991<br>ilee@raklaw.com<br>bwang@raklaw.com<br>aweiss@raklaw.com<br>pkroeger@raklaw.com<br>rak_nextgen@raklaw.com |

Date: December 4, 2023

By: / M. Scott Stevens /
M. Scott Stevens
Reg. No. 54,762
**ALSTON & BIRD LLP**
Vantage South End
1120 South Tryon Street, Suite 300
Charlotte, NC 28280-4000
Phone: 704.444.1025
Email: scott.stevens@alston.com

*Attorney for Petitioner*