IN THE UNITED STATES DISTRICT COURT
FOR THE EASTERN DISTRICT OF TEXAS
SHERMAN DIVISION

R2 Solutions LLC, Plaintiff, v. American Airlines, Inc., Defendant.	Civil Action No. 4:22-cv-00353-ALM Jury Trial Demanded

PLAINTIFF'S OPENING CLAIM CONSTRUCTION BRIEF

TABLE OF CONTENTS

I. INTRODUCTION 1

II. OVERVIEW OF THE TECHNOLOGY AT ISSUE 1

A. '610 Patent 1

B. '157 Patent 2

C. '329 Patent 4

D. '317 Patent 5

III. LEGAL STANDARDS 7

A. General Principles of Claim Construction 7

B. Plain and Ordinary Meaning 8

C. Reading Limitations into the Claims 9

IV. ARGUMENTS 10

A. Terms for Construction 10

1. U.S. Patent No. 8,190,610 10

a. "identifiable to [that/the] data group" (Claims 1, 3, 4, 17, 19, 20) 10

b. "independently output a plurality of lists of values" (Claims 1, 17) 11

c. "the data of the first data group is mapped differently than the data of the second data group" (Claims 1, 17) 13

2. U.S. Patent No. 8,341,157 14

a. "intent(s)" (Claims 1, 2, 11, 12, 22) 14

b. "ranking" (Claims 1, 2) 15

c. "keyword" (Claims 1, 2) 16

d. "classifying the query into at least one/a subset of the plurality of intents" (Claims 1, 2) 17

American Airlines/Hilton, Ex. 1040, p.2
American Airlines/Hilton v. R2 Solutions
IPR2023-00690

3. U.S. Patent No. 7,698,329 18

a. "each document of said certain documents containing at least one section that is not used by said search engine for recall" (Claims 1, 8) 18

b. "ranking" (Claims 1, 8) 19

c. "abstract" (Claims 4, 11) 20

d. "search engine index" (Claims 5, 12) 21

4. U.S. Patent No. 8,209,317 22

a. "submitted" (Claims 1, 2, 4, 5, 8, 11-14) 22

b. "query data management server" (Claims 4, 5) 23

c. "storing in memory data about previously received queries at the computer database system" (Claim 8) 24

d. "better representative of the entire search query desired by the user" / "not fully representative of an entire search query desired by the user" (Claims 1, 8) 25

e. "a database configured to store information about events in the computer database system" (Claim 1) 26

V. CONCLUSION 27

TABLE OF AUTHORITIES

Cases

3M Innovative Props. Co. v. Tredegar Corp.,
725 F.3d 1315 (Fed. Cir. 2013)..... 9

Aylus Networks, Inc. v. Apple Inc.,
856 F.3d 1353 (Fed. Cir. 2017)..... 9, 14, 19

Comark Communications v. Harris Corp., 156 F.3d 1182
(Fed. Cir. 1998)..... 9

Constant v. Advanced Micro-Devices, Inc.,
848 F.2d 1560 (Fed. Cir. 1988)..... 9

GE Lighting Sols., LLC v. AgiLight, Inc.,
750 F.3d 1304 (Fed. Cir. 2014)..... 21

Kara Tech. Inc. v. Stamps.com Inc.,
582 F.3d 1341 (Fed. Cir. 2009)..... 9

Kroy IP Holdings, LLC v. Safeway, Inc.,
No. 2:12-CV-00800-WCB, 2014 WL 3735222 (E.D. Tex. July 28, 2014)..... 8

Leibel-Flarsheim Co. v. Medrad, Inc.,
358 F.3d 898 (Fed. Cir. 2004)..... 9

Markman v. Westview Instruments, Inc.,
517 U.S. 370 (1996)..... 7

Markman v. Westview Instruments, Inc.,
52 F.3d 967 (Fed. Cir. 1995)..... 9

Medrad, Inc. v. MRI Devices Corp.,
401 F.3d 1313 (Fed. Cir. 2005)..... 8

MV3 Partners LLC v. Roku, Inc.,
No. 6:18-CV-00308-ADA, Dkt. No. 90 (W.D. Tex. Oct. 2, 2019)..... 8

O2 Micro Int'l Ltd. v. Beyond Innovation Tech. Co.,
521 F.3d 1351 (Fed. Cir. 2008)..... 7

Phillips v. AWH Corp.,
415 F.3d 1303 (Fed. Cir. 2005)..... *passim*

American Airlines/Hilton, Ex. 1040, p.4
American Airlines/Hilton v. R2 Solutions
IPR2023-00690

Teva Pharms. USA, Inc. v. Sandoz, Inc.,
135 S. Ct. 831 (2015) 7

Thorner v. Sony Computer Entm't Am. LLC,
669 F.3d 1362 (Fed. Cir. 2012) 8, 24

U.S. Surgical Corp. v. Ethicon, Inc.,
103 F.3d 1554 (Fed. Cir. 1997) 8

Vitronics Corp. v. Conceptronic, Inc.,
90 F.3d 1576 (Fed. Cir. 1996) 8, 9

I. INTRODUCTION

This case involves four patents: U.S. Patent Nos. 8,190,610; 8,341,157; 7,698,329; and 8,209,317 (Exhibits 1-4, respectively). R2 Solutions files this opening claim construction brief addressing these patents and their terms and phrases in dispute. This Court previously construed terms and phrases from each of the patents by Memorandum Opinion and Order dated January 4, 2022. *See*, *e.g.*, *R2 Solutions LLC v. Walmart Inc*., Case No. 4:21-cv-00091-ALM, ECF 54.

II. OVERVIEW OF THE TECHNOLOGY AT ISSUE

A. '610 Patent

The '610 patent generally relates to the processing of large sets of data (often known today as "big data"). The claimed inventions provide for more dynamic, customizable, and efficient processing of large data sets over prior art methods. *See, e.g.*, Ex. 1 at 2:58–61, 4:18–22. The inventions thus increase efficiency and reduce processor execution time. *See id.* at 2:64–67 (explaining that the claimed invention "can make the processing of the output data more efficient and/or convenient").

Specifically, the '610 patent states that the disclosed inventions "enhance[] the utility of the MapReduce programming methodology." *Id*. at Abstract; *see also id*. at 1:31–33, 1:66 – 2:2. MapReduce methods consist of a map procedure to filter and/or sort data, and a reduce method, which "reduces" the data via some type of operation (for example, a counting, frequency determining, or other summary operation). The '610 patent explains that "conventional MapReduce implementations do not have facility to efficiently process data from heterogeneous sources" and that "it is impractical to perform joins over two relational tables that have different schemas." *Id*. at 3:9–20. To solve these problems, the '610 patent discloses inventions where user-configurable MapReduce functions are applied to data from discrete data sources that can

have different schema, followed by a reduce function on intermediate data based on a common key. As the specification explains:

> [T]he MapReduce concept may be utilized to carry out map processing independently on two or more related datasets (e.g., related by being characterized by a common key) even when the related data sets are heterogeneous with respect to each other, such as data tables organized according to different schema. The intermediate results of the map processing (key/value pairs) for a particular key can be processed together in a single reduce function by applying a different iterator to intermediate values for each group. In this way, operations on the two or more related datasets may be carried out more efficiently or in a way not even possible with the conventional MapReduce architecture.

Id. at 8:47–58.

An exemplary embodiment is illustrated below in FIG. 4, with, e.g., map tasks 402, 404 with representative tables 302, 304, partitioned data 406, 408, and reduce tasks 410, 412:

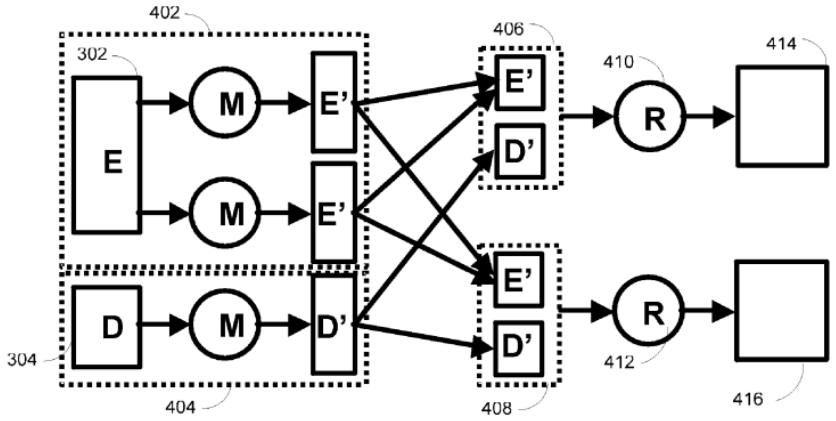

Id. at FIG. 4. The map tasks 402 and 404 operate on two separate data groups, E and D, to produce intermediate data, E' and D', that retain identification to the respective original data groups. *Id*. at 3:65 – 4:13. The intermediate data is partitioned (406 and 408) and subsequently passed to the reduce functions 410 and 412 to merge all of the intermediate data. *Id*. at 4:14–59.

B. '157 Patent

The '157 patent discloses systems and methods for generating and presenting search results using pre-programmed user intents. Using intents improves computer speed, efficiency,

effectiveness, and functionality by, for instance, reducing the number of queries that must be processed in order to return relevant results. The specification of the '157 patent explains that if, like traditional search engines, the "engine simply regards a web query as a 'bag of words,' the search engine will return web pages and other data objects (e.g., images, audio files, text files) that contain, or are otherwise associated with, the individual words within the query." Ex. 2 at 4:1–5. Treating a user query as a "bag of words" is problematic because it may yield results that do not align with the purpose of the user's search. Thus, the specification teaches:

> When a user submits a query to a web search service such as the Yahoo! or Google search services, the user generally has some intent. The user's intent may simply be to explore information available on the web relating to one or more topics, for example, a user may simply wish to browse web sites relating to "rainforests" without having any specific purpose in mind. Commonly, however, a user has a more focused purpose in mind. By entering a "rainforest" query, a user may wish to obtain information on traveling to a rainforest, or on purchasing CDs or books having rainforests as a subject or purchasing rainforest themed merchandise such as clothing or accessories.

Id. at 3:46–57.

While search engines existing at the time of invention could tailor search results by ranking the results and displaying each result with a title and brief abstract taken from the document, the '157 patent explains how "results could be significantly enhanced if the likely intent of the query is known." *Id.* at 4:16–17. Rather than return all documents having a matching keyword—e.g., by using traditional indexing methods—a search engine can return a narrower set of results if the search results are "ranked such that results that are more relevant to the user's intent appear at or near the top of the search results." *Id.* at 4:17–19. The result set itself is further improved because display entries for returned data objects can be customized based on each corresponding intent determined from the user's search. *See id.* at 4:19–26.

More generally, the specification of the '157 patent elucidates enhanced search engine

technology concepts, such as query reception, keyword identification, classification of the query with respect to one or more intents, identifying and ranking data objects, and assigning intents to identified data objects. *See*, *e.g.*, *id*. at Abstract. The patent claims are directed to these enhancements, with Claim 1 requiring assigning one or more intents to data objects, ranking such data objects, building a result based on ranked data objects, and customizing display entries. This process facilitates presentation of information to users that interests them. *Id*. at 1:26–29.

C. '329 Patent

The '329 patent teaches a novel approach to ranking documents in response to a search query that improves the relevance of the results and thwarts third party efforts to game search systems. *See*, *e.g.*, Ex. 3 at 1:67 – 2:17. The specification explains that nefarious parties can trick traditional search engines "into recalling documents and inflating their ranking" using techniques known as "search engine spamming." *Id*. at 2:6–8. For example, spamming can "trick search engine ranking algorithms into recalling and highly ranking documents that contain . . . sponsored links to a web merchant." *Id.* at 2:8–11. The consequence is that search results for many queries include irrelevant content that the user does not desire. *Id.* at 2:14–17. The specification offers an illustration involving a user shopping for a camera:

> A typical example of search engine spam is when a user tries to search for the terms "digital camera reviews" and expects to find pages which review various models of digital cameras, detailing performance specifications, sample images and reviewer pros and cons list. Having this expectation when the user clicks on a link for one of the results, the user is instead led to a page that contains nothing but a plethora of keywords and links to other stores where he can buy the camera.

Id. at 2:18–27. Thus, "there is need for mechanisms that prevent hiding of search engine spam but yet allow webmasters to designate page content that should not be indexed." *Id.* at 2:34–37.

The specification describes a novel approach to achieve this goal:

> As a crawler examines an individual document, one of the attributes that can be considered is section structure. In examining the various sections, the crawler

> identifies sections to ignore, that is, to not index in search engine indexes and or otherwise use for recalling the document. Such sections are referred to herein as "no-recall sections." Those portions that are indexed for recalling are referred to as recall sections. In an embodiment, a crawler ignores no-recall sections demarcated by, for example, a tag. In another embodiment a no-recall section may be identified by analyzing section content rather than examining only delimiters. The terms inside no-recall sections do not contribute to the document term frequency counts and are not used for recalling the documents in response to search engine queries. However the no-recall sections are included as input to forms of analysis of the document that affect, for example, the document's ranking. Links inside the no-recall sections as well as the rest of the document may be followed in order to discover new content. The document may be analyzed for the amount of advertisements or other features in its entirety. Therefore, terms inside the no-recall sections can affect document ranking.

Id. at 3:7–27. This solution prevents nefarious parties from hiding search engine spam because pages with "copious amounts of advertisements, or low quality links, will be readily identified and ranked accordingly." *Id.* at 3:28–31. By not ignoring no-recall sections when ranking the documents, the claimed inventions prevent a document from being "designed so that content that increases recall and/or ranking potential is placed in the recall section and content that diminishes high ranking potential is hidden in a no-recall section." *Id.* at 4:1–9. This allows "[a]ll the attributes in all of the sections of a document such as 'links', frequency of terms, coloring, font, etc." to be considered in the spam and relevancy analyses. *Id.* at 4:13–16. The result is that a search engine can "affect the recall and ranking of documents to more accurately reflect relevance of the documents to search engine queries." *Id.* at 3:1–3.

D. '317 Patent

The '317 patent is directed to "a flexible and intuitive system for reconstructing a search query based on a received partial query." Ex. 4 at 1:16–18. The specification of the '317 patent explains that existing search engine interfaces "may be rigid and require users to submit full queries to perform searche[s]." *Id*. at Abstract. Traditional search engines were built with desktop computers in mind; thus, they were designed with the assumption that users had access

to full keyboards for composing complete, properly structured search queries. *See*, *e.g.*, *id.* at 1:43–56. However, as noted in the specification, users at the time could increasingly access the internet from a variety of devices, including "cell phones, personal digital assistants, and the like." *Id.* at 1:44–47. Thus, portability started to become "an increasingly important concern." *Id*. at 1:50–52. But increasing device portability came with a tradeoff in input capabilities. *See id*. Most phones did not have full keyboards. The simpler input mechanisms available on mobile devices presented a barrier to entering properly structured queries and limited users' ability to fully explore the Internet. *See id.* at 1:52–53.

The '317 patent solves this problem in multiple ways. In one embodiment, "[t]he search engine server 120 may receive a partial query from the user client system 110, reconstruct a full query and provide search results based on the reconstructed query." *Id*. at 2:62–64. The specification explains that partial queries are "shorthand ways of expressing typical search queries." *Id.* at 3:15–17. For example, "auto ins" may be a partial query for the full search query, "auto insurance." *Id.* at 3:20–23. While "auto ins" may be an intentional abbreviation, it might also be a typographical error resulting from the restrictive input options of mobile devices. Because the claimed invention will nevertheless be able to take the incomplete query "auto ins" and return search results for "auto insurance," a broader array of mobile devices and input mechanisms may be used to perform effective searches. *See id.* at 1:43–56.

Figure 2 further illustrates this embodiment:

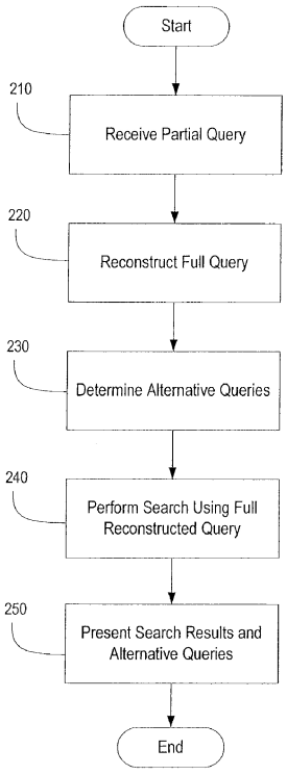

A user's partial query is received at step 210, and the full query is reconstructed at step 220, such as by determining the "most frequently submitted known query." *Id*. at 3:27–40. Alternative queries can also be determined at step 230, and such alternative queries can, for example, "include any full queries that match the partial words of the partial query in a different order. *Id*. at 3:41–49. A search is then performed using a full reconstructed query at step 240, and results are presented to the user at step 250. *Id*. at 3:50–59.

III. LEGAL STANDARDS

A. General Principles of Claim Construction

Claim construction is a legal question for the Court. *See Teva Pharms. USA, Inc. v. Sandoz, Inc.*, 135 S. Ct. 831, 835 (2015) (citing *Markman v. Westview Instruments, Inc.*, 517 U.S. 370, 372 (1996)). "When the parties raise an actual dispute regarding the proper scope of [the] … claims, the court, not the jury, must resolve that dispute." *O2 Micro Int'l Ltd. v. Beyond*

Innovation Tech. Co., 521 F.3d 1351, 1361 (Fed. Cir. 2008). However, "claim construction is a matter of resolution of disputed meanings and technical scope, not an obligatory exercise in redundancy." *U.S. Surgical Corp. v. Ethicon, Inc.*, 103 F.3d 1554, 1568 (Fed. Cir. 1997). It is, thus, unnecessary for the Court to construe terms that are not difficult to understand or that do not have particular technical meanings. *See*, *e.g.*, *MV3 Partners LLC v. Roku, Inc.*, No. 6:18-CV-00308-ADA, Dkt. 90 at 6 (W.D. Tex. Oct. 2, 2019) (citing *Kroy IP Holdings, LLC v. Safeway, Inc.*, Civ. No. 2:12-CV-00800-WCB, 2014 WL 3735222, at *2 (E.D. Tex. July 28, 2014)).

B. Plain and Ordinary Meaning

The "words of a claim 'are generally given their ordinary and customary meaning.'" *Phillips v. AWH Corp.*, 415 F.3d 1303, 1312 (Fed. Cir. 2005) (en banc) (quoting *Vitronics Corp. v. Conceptronic, Inc.*, 90 F.3d 1576, 1582 (Fed. Cir. 1996)). Importantly, the plain and ordinary meaning of a term is not determined in a vacuum. What matters is the plain and ordinary meaning to a person of ordinary skill in the art ("POSA") in the context of the claimed invention. *See Medrad, Inc. v. MRI Devices Corp.*, 401 F.3d 1313, 1319 (Fed. Cir. 2005) ("We cannot look at the ordinary meaning of the term … in a vacuum. Rather, we must look at the ordinary meaning in the context of the written description and the prosecution history."). A POSA is deemed to have read the claim term in the context of the entire patent. *Phillips*, 415 F.3d at 1482. Therefore, to ascertain the meaning of a claim, the Court must look to the claim, the specification, and the patent's prosecution history. *Id.* at 1314–17.

The "only two exceptions to [the] general rule" that claim terms are construed according to their plain and ordinary meaning are when the patentee (1) acts as his/her own lexicographer, or (2) disavows the full scope of the claim term either in the specification or during prosecution. *Thorner v. Sony Computer Entm't Am. LLC*, 669 F.3d 1362, 1365 (Fed. Cir. 2012). To act as

lexicographer, the patentee must "clearly set forth a definition of the disputed claim term" and "clearly express an intent to define the term." *Id.* at 1365. To disavow the full scope of a claim term, the patentee's statements in the specification or prosecution history must represent "a clear disavowal of claim scope." *Id.* at 1366. When "an applicant's statements are amenable to multiple reasonable interpretations, they cannot be deemed clear and unmistakable." *3M Innovative Props. Co. v. Tredegar Corp.*, 725 F.3d 1315, 1326 (Fed. Cir. 2013); *see also Aylus Networks, Inc. v. Apple Inc.*, 856 F.3d 1353, 1363 (Fed. Cir. 2017).

C. Reading Limitations into the Claims

Claims must also be read "in view of the specification, of which they are a part." *Markman v. Westview Instruments, Inc.*, 52 F.3d 967, 979 (Fed. Cir. 1995). "[T]he specification 'is always highly relevant to the claim construction analysis. Usually, it is dispositive; it is the single best guide to the meaning of a disputed term.'" *Phillips*, 415 F.3d at 1315 (quoting *Vitronics*, 90 F.4d at 1582). "'Although the specification may aid the court in interpreting the meaning of disputed claim language, particular embodiments and examples appearing in the specification will not generally be read into the claims.'" *Comark Communications v. Harris Corp.*, 156 F.3d 1182, 1187 (Fed. Cir. 1998) (quoting *Constant v. Advanced Micro-Devices, Inc.*, 848 F.2d 1560, 1571 (Fed. Cir. 1988)). "[I]t is improper to read limitations from a preferred embodiment described in the specification—even if it is the only embodiment—into the claims absent a clear indication in the intrinsic record that the patentee intended the claims to be so limited." *Leibel-Flarsheim Co. v. Medrad, Inc.*, 358 F.3d 898, 913 (Fed. Cir. 2004); *see also Kara Tech. Inc. v. Stamps.com Inc.*, 582 F.3d 1341, 1348 (Fed. Cir. 2009) ("The patentee is entitled to the full scope of his claims, and we will not limit him to his preferred embodiment or import a limitation from the specification into the claims.").

IV. ARGUMENTS

A. Terms for Construction

1. U.S. Patent No. 8,190,610

a. "identifiable to [that/the] data group" (Claims 1, 3, 4, 17, 19, 20)

R2 Solutions' Construction	Defendant's Construction
Plain and ordinary meaning. See also the agreed construction for "data group." ECF 32.	Indefinite.

The phrase "identifiable to [that/the] data group" is not indefinite should be given its plain and ordinary meaning. The claims themselves provide reasonable certainty as to the meaning of "identifiable to [that/the] data group." For example, Claim 1 makes clear that "intermediate data" is "identifiable to" a corresponding data group and that the "intermediate data for each data group" is processed "in a manner that is ***defined to correspond to that data group***." For intermediate data to be processed in a manner that corresponds to its data group, the intermediate data must be identifiable as part of that data group. A POSA would understand this based solely on the claim language.

Nevertheless, the specification is replete with references to data that is "identifiable" to a particular data group. It discloses, for example, that intermediate data, which is output from a map function, "retains an identification" with a particular data group. *See* Ex. 1 at 4:4–13. In some embodiments, a "group_id" is passed as a parameter to a map function so that the resulting data can be identifiable to a data group. *See id*. at 4:45–46. In other embodiments, identifiers are associated with particular data tables. *See id.* at Figs. 3–5.

AA's sole argument is that the specification "does not even mention the word 'identifiable' once." Ex. 5 (AA Expert Decl.), ¶ 47. This argument is apparent from AA's "expert declaration" served when the parties filed their Joint Claim Construction and Prehearing

Statement. ECF 32. This "expert declaration"—which is more like a claim construction brief—contains copious legal argument and little to no actual expert opinion. In any event, the argument elevates form over substance. While the word "identifiable" does not appear in the specification, similar words, such as "identifier" and "identification" appear seventeen times in the specification and ten more in the claims, all in the context of associating data with a particular data group. Thus, contrary to AA's argument, the '610 patent explains how data may be made "identifiable" to a data group. AA argues that, without the word "identifiable" in the specification, a POSA cannot determine whether "it requires an actual identifier or the capability to be associated with an identifier." Ex. 5, ¶ 47. This argument is a red herring. According to the plain language of the claims, all that matters is that data is able to be identified—such is the plain meaning of "identifiable." The mechanism, whether by an identifier or something else, is irrelevant. Thus, the Court should reject AA's argument and give the disputed phrase its plain and ordinary meaning.

b. "independently output a plurality of lists of values" (Claims 1, 17)

R2 Solutions' Construction	Defendant's Construction
Plain and ordinary meaning.	"each map function outputs more than one list of values without coordination with other map functions"

The limitation "independently output a plurality of lists of values" should be given its plain and ordinary meaning. Each independent claim requires "providing each data partition to a selected one of a plurality of mapping functions that are each user-configurable to *independently output a plurality of lists of values*." AA's proposed construction improperly requires that each mapping function acts "*without coordination* with other map functions." The phrase "without coordination" appears nowhere in the '610 patent. Nor is there any embodiment or example in the specification in which a map function cannot coordinate with other map functions.

Most problematic is AA's inclusion of an ambiguous negative limitation born of conflating "independently" with "without coordination." This runs contrary to the specification. The plain and ordinary meaning of the disputed phrase in the context of the patent is simple and clear: each map function independently outputs its own lists as opposed to each map function contributing to the same lists, regardless of the level of coordination between the map functions. For instance, Figure 5 shows that each map function 504 independently outputs its own lists 506 (e.g., "EevenKeys.Emp" and "OddKeys.Emp"), as opposed to all four map functions 504 outputting values to the same lists. Whether the map functions are acting with or without some higher level of coordination is irrelevant. Each one is "independently" outputting its own lists.

AA's proposed construction is, thus, too restrictive in the context of the invention, which relates to distributed computing (i.e., computing using multiple computers). Claim 1 specifically requires that the "mapping and reducing operations are performed by a *distributed system*," and the specification explains that "MapReduce programming methodology" is a "programming methodology to perform *parallel computations* over distributed" data set. Ex. 1 at 1:6–44. For "parallel computations" and a "distributed system" to work, there must be extensive coordination among "independent" components of the system, perhaps between independent map functions.

Further still, AA's position that map functions operate "without coordination" is nonsensical in the context of the disclosure. As a POSA would understand, code is often written to be modular, with stand-alone functions having "independent" utility while nevertheless acting in coordination with other functions to achieve a particular result (e.g., map functions map, reduce functions reduce, and coordinated application of these independent functions across a distributed system achieves MapReduce methodology). The '610 patent essentially discloses as much. *See*, *e.g.*, *id*. Thus, reading "without coordination" into the disputed phrase is an

unnecessary and unsupported limitation that is contrary to the phrase's plain and ordinary meaning in light of the patent's teachings.

c. "the data of the first data group is mapped differently than the data of the second data group" (Claims 1, 17)

R2 Solutions' Construction	Defendant's Construction
Plain and ordinary meaning. See also the agreed construction for "data group." ECF 32.	"the data of the first data group is mapped by a different map function than the data of the second data group"

The term "the data of the first data group is mapped differently than the data of the second data group" should be given its plain and ordinary meaning, consistent with the Court's construction in prior litigation involving the '610 patent. AA's proposed construction inappropriately requires that different mapping functions are used for different data groups. AA's proposal is essentially identical to that which the Court expressly rejected in prior litigation. *See* Ex. 6 (Memorandum Opinion and Order), 16–18. As the Court found, "use of different map functions for different groups is a specific feature of particular disclosed embodiments that should not be imported into the claims." *Id.* at 18.

AA's argument that the prosecution history supports its construction misrepresents the intrinsic record by manipulating a quote in the file history. *See* Ex. 5, ¶ 54. The full quote at issue is: "Additionally, Datar [the prior art reference] fails to teach or suggest apparatus or methods for reducing by iterating at least one key of a first and second intermediate data set to an output set that has different schema than the first and second data sets, which were input to different mapping functions***, in the manner claimed in claims 47 and 54***." *See* Ex. 7 at 15 (emphasis added). AA intentionally omitted the emphasized clause. *See* Ex. 5, ¶ 54. The applicant was presenting arguments regarding Claims 47 and 54 (issued as Claims 33 and 40, respectively), which are not asserted in this case and, unlike Claims 1 and 17, require "providing each data

partition to ***a selected one of a plurality of mapping functions***." Claims 1 and 17, in contrast, require simply that the data of the data groups be "mapped differently," without reference to the mapping function to which the data is provided. Arguments about limitations present only in unasserted claims cannot be "clear and unmistakable" disavowal of scope of the asserted claims. *See Aylus Networks*, 856 F.3d at 1363. No construction for this phrase is necessary.

2. U.S. Patent No. 8,341,157[1]

a. "intent(s)" (Claims 1, 2, 11, 12, 22)

R2 Solutions' Construction	Defendant's Construction
Plain and ordinary meaning.	"a mapping from many combinations of keywords to a set of common goals that users pursue in a search query or session of multiple queries"

The term "intent(s)" should be given its plain and ordinary meaning, consistent with the Court's construction in prior litigation. *See* Ex. 6 at 31–34. AA's proposed construction is similar to a construction that the Court already considered and rejected. *See id*. As the Court previously found, the claim language itself explains "intents": "each of the plurality of intents indicates a type of information regarding the query keyword that is likely to be desired by a user submitting the query." *Id.* at 33. The claim language thus makes construction of "intents" unnecessary.

AA's argument that the specification defines "intents" is wrong. *See* Ex. 5, ¶ 72. In the prior litigation, the Court already determined that the portion of the specification that AA relies on "does not rise to the level of a lexicography." Ex. 6 at 33–34. AA has given the Court no reason to depart from its previous ruling.

[1] The parties have agreed to withdraw the terms "tokens," "data object(s)," "at least some," and "display entry" from the claim construction process for the '157 patent.

b. "ranking" (Claims 1, 2)

R2 Solutions' Construction	Defendant's Construction
Plain and ordinary meaning.	plain and ordinary meaning, which is "assigning a rank"

The Court should construe the term "ranking" to have its plain and ordinary meaning. AA purports to agree with this, but then confusingly proposes a construction. The import of AA's proposal is unclear. To the extent AA intends to exclude all steps involved in ranking data objects other than the single step of "assigning a rank," AA's proposal is inconsistent with the specification. For example, the specification discusses "ranking" data objects by attributes that may be predetermined prior to the "ranking" occurring, such as "term counts" and "frequency within the corpus of documents." Ex. 2 at 10:7–8. Thus, "ranking" could include more than just "assigning a rank"; it could also include determining the attributes used for ranking. Nothing in the patent itself suggests that "ranking" must be limited to the step of actually assigning a rank, or that it requires "assigning" anything at all.

AA's declaration demonstrates the impropriety of its construction, quoting from various passages of the specification that discuss ranking. *See* Ex. 5, ¶ 76. Only one of those passages uses the word "assigned." And the specification, in language omitted by AA, makes clear that it is describing only one embodiment: "***In another embodiment***, a score is assigned for each candidate result against multiple intents." Ex. 2 at 10:18–20 (emphasis added). The Court should reject AA's proposal and construe "ranking" to have its plain and ordinary meaning.

c. "keyword" (Claims 1, 2)

R2 Solutions' Construction	Defendant's Construction
Plain and ordinary meaning.	"a characteristic word, phrase or code in a query used to perform searching operations"

The Court should construe "keyword" to have its plain and ordinary meaning. The claims themselves illustrate the meaning. For example, Claim 1 requires the steps of "analyzing the query … to identify at least one query keyword," "determining a plurality of intents … from the at least one keyword," and "identifying … a plurality of data objects … that match the at least one query keyword." Claim 4 further explains that identifying query keywords is accomplished by "parsing the tokens and identifying common entities, phrases, spelling errors, synonyms, variants of stems, and noisewords." Thus, as the claims explain, a "keyword" is derived from a query, provides a basis for determining a "plurality of intents," is used to identify "a plurality of data objects," and can be determined via parsing of tokens. A POSA's ability to understand this term in its plain and ordinary meaning is also accentuated by several excerpts from the '157 patent specification, which are in accord with the claims. *See*, *e.g.*, Ex. 2 at 9:36–41 (discussing how keywords can be identified via parsing into tokens that "can be analyzed to identify common entities, phrases, spelling errors, synonyms, variants of stems, and noisewords"); 11:47–52 (same); 14:30–35 (providing a specific example in a code excerpt of "keyword=Nikon+D60&amp" determined from the query "nikon d60").

AA's construction improperly requires that a "keyword" is "a ***characteristic*** word, phrase or code in a query" that is further "***used to perform searching operations***." Nothing in the claims supports such requirements. Indeed, AA's proposal would render meaningless other claim language. The claims require determining intents from the "keyword" and identifying data objects via the "keyword." *See id*. at Claim 1. The claim language thus describes the "search

operations" for which a keyword is used, and accepting AA's construction would impermissibly render this claim language superfluous. *See*, *e.g.*, *Phillips*, 415 F.3d at 1314-17. The Court should reject AA's construction and give "keyword" its plain and ordinary meaning.

d. "classifying the query … into at least one/a subset of the plurality of intents" (Claims 1, 2)

R2 Solutions' Construction	Defendant's Construction
Plain and ordinary meaning.	"assigning the query to one or more of the plurality of intents determined from the at least one query keywords"

The Court should construe the phrase "classifying the query … into at least one/a subset of the plurality of intents" to have its plain and ordinary meaning. AA attempts to justify re-writing the limitation solely via an erroneous analysis of the claim language. *See* Ex. 5, ¶ 91. Specifically, AA proposes changing the word "classifying" to "assigning," despite the fact that the claims use the word "assigning" elsewhere. If the patentee intended "classifying the query" to mean "assigning the query," it would have simply used that language.

AA leans on an argument that a dictionary defines "classify" as "to assign to a category." But AA omits the fact that the very first definition of "classify" in the cited dictionary is "to arrange in classes." *See* Ex. 8 (Merriam Webster's Collegiate Dictionary 11th ed. (2004) "classify"). A cherry-picked definition is no basis for altering the express claim language. The Court should reject AA's proposal and give the subject phrase its plain and ordinary meaning.

3. U.S. Patent No. 7,698,329

a. "each document of said certain documents containing at least one section that is not used by said search engine for recall" (Claims 1, 8)

R2 Solutions' Construction	Defendant's Construction
Plain and ordinary meaning. See also the agreed constructions for "document" "recall," and "section." ECF 32.	"each document of said certain documents containing a <noindex> tag"

The Court should give the phrase "each document of said certain documents containing at least one section that is not used by said search engine for recall" its plain and ordinary meaning. *See* Ex. 6 (Memorandum Opinion and Order) at 45–49. The disputed phrase is merely an excerpt from a larger phrase that the Court construed in prior litigation, and the Court's analysis there is just as applicable here. *See id*.

AA's proposed construction attempts to limit the phrase to a preferred embodiment and renders dependent claims superfluous. Claims 2 and 9, which depend from Claims 1 and 8, respectively, recite that "said at least one section of said certain documents not used by said search engine to recall documents ***are demarcated by a tag of an element***…." AA's proposed construction, which goes so far as to identify the language of a tag, would make the *independent* claims *narrower* than the dependent claims. Such is impermissible. *See*, *e.g.*, *Phillips*, 415 F.3d at 1315 ("the presence of a dependent claim that adds a particular limitation gives rise to a presumption that the limitation in question is not present in the independent claim").

AA incorrectly contends that prosecution disclaimer requires its proposed construction by mischaracterizing the prosecution history. *See* Ex. 5, ¶¶ 121–130. In reply to the final office action, the applicant discussed how prior art "describe[d] an experiment to determine how various search engines handle noindex meta tags" and explained that the prior art search engines either "1) use[d] the data contained within a noindex meta tag for the purposes of **both** recall and

ranking, or 2) [did] not use the data contained within a noindex meta tag for the purposes of **both** recall and ranking." Ex. 9 at 7 (emphasis in original). In other words, the applicant was simply explaining that the prior art required that data demarcated with a noindex tag was either ignored totally or used for both recall and ranking. The applicant then asserted that Claim 1 teaches something different, stating "Claim 1 recites 'ranking a plurality of documents includes ranking said plurality of documents based, at least in part, on the one or more sections of said certain documents **not used by said search engine** to recall documents.'" *Id*. (emphasis in original). To demonstrate the difference, the applicant then presented an example of how Claim 1 could be practiced using the noindex metatags of the prior art, writing: "Thus, Claim 1 teaches ignoring the data contained within a noindex metatag for the purposes of recall but using the data contained within a noindex metatag for the purposes of ranking." *Id*.

This was not a "clear and unmistakable" disavowal of claim scope. *See Aylus Networks*, 856 F.3d at 1363. Instead, the applicant merely used an exemplary embodiment within the scope of Claim 1 to better explain why the claim was not rendered obvious by the prior art. The applicant was not restricting Claim 1 to noindex metatags. The Court should construe the phrase in accordance with its previous ruling and reject AA's construction.

b. "ranking" (Claims 1, 8)

R2 Solutions' Construction	Defendant's Construction
Plain and ordinary meaning.	plain and ordinary meaning, which is "assigning a rank"

The Court should construe the term "ranking" to have its plain and ordinary meaning. Just as it did for the same term in the '157 patent, AA agrees but confusingly proposes a construction anyway. Once again, to the extent AA intends to exclude all steps involved in ranking data objects other than the single step of "assigning a rank," AA's proposal is

inconsistent with the claims and the specification. The claims describe how ranking is performed, and make clear that "ranking" can include more than simply "assigning a rank." Claims 1 and 8 require "ranking said plurality of documents based, at least in part, on the at least one section of said certain documents not used by said search engine to recall documents." Claims 6, 7, 13, and 14 then provide explicit parameters for ranking, requiring some dependence on a "vector space model" and/or "language model." The specification reinforces the notion that "ranking" can go beyond simply "assigning a rank." *See*, *e.g.*, Ex. 3 at 3:1–31 (discussing how the "no-recall sections are included as input to forms of analysis" that affect ranking); 4:1–16 (discussing that "no-recall sections are not ignored when ranking" and explaining that "'links', frequency of terms, coloring, font, etc." are considering in such analyses); 4:29–53 (discussing step 305 from Fig. 3 and several approaches regarding how to "rank sections").

The impropriety of AA's proposal is evident in its own argument. For example, AA takes an explanation from the specification about "ordering" a list of documents and summarily concludes that a step in this process that involves "assign[ing] a rank" characterizes the full scope of "ranking" in the claim language. *See* Ex. 5, ¶ 132. AA cites nothing demonstrating that the applicants intended the phrase "assign[ing] a rank" to describe the entire ranking process. AA's construction is, thus, unreasonably narrow in view of the context of the patent itself and is simply unnecessary. The Court should reject AA's construction and construe "ranking" to have its plain and ordinary meaning.

c. "abstract" (Claims 4, 11)

R2 Solutions' Construction	Defendant's Construction
Plain and ordinary meaning.	"a concise description of a document"

The Court should construe the term "abstract" to have its plain and ordinary meaning. *See* Ex. 6 at 42–44. AA's proposed construction is essentially a short version of a proposed

construction already considered and rejected by the Court in prior litigation. *See id*. AA argues that the specification "provided a definition" for "abstracts" because it states that "[a]bstracts provide a concise description of the respective document." But this sentence simply states what an abstract *provides*—it does not define "abstract." *See, e.g., GE Lighting Sols., LLC v. AgiLight, Inc.*, 750 F.3d 1304, 1309 (Fed. Cir. 2014) (explaining that the "standards for finding lexicography and disavowal are exacting. To act as its own lexicographer, a patentee must 'clearly set forth a definition of the disputed claim term,' and 'clearly express an intent to define the term.'"). The Court recognized as much in its previous ruling, stating that this sentence simply "elaborates on the word 'abstracts.'" Ex. 6 at 43. The Court should therefore reject AA's argument and give "abstract" its plain and ordinary meaning.

d. "search engine index" (Claims 5, 12)

R2 Solutions' Construction	Defendant's Construction
Plain and ordinary meaning.	"an ordered list of information accompanied with the location of the information"

The Court should construe "search engine index" to have its plain and ordinary meaning. "Search engine indexes" are discussed throughout the '329 specification, and the background section explains how "search engine indexes" are used. *See* Ex. 3 at 1:45–59. The fact that "search engine indexes" are addressed in the specification background section is reason enough to leave the term alone because it is clearly already within the purview of a POSA's knowledge. Indeed, a POSA reading the specification would understand that a "search engine index" is exactly what it sounds like (i.e., an index used by a search engine).

AA's proposal unnecessarily constrains the term. Requiring a "search engine index" to be limited to an "ordered list" is not supported by the specification, and what AA means by "location" in this context is ambiguous. Indeed, AA's sole support for its construction is a

statement in an *unrelated* patent that says that an index created by a search engine "comprise[s] an ordered list of information accompanied with the location of the information." *See* Ex. 5, ¶¶ 140–141. To be clear, the patent AA relies on does not actually use the term "search engine index," let alone define the term, and AA has cited nothing for the proposition that an unrelated patent can define a term in another patent. As the Federal Circuit has held, "while extrinsic evidence can shed useful light on the relevant art … it is less significant than the intrinsic record in determining the legally operative meaning of claim language." *Phillips*, 415 F.3d at 1317. The Court should thus reject AA's proposal and give the term "search engine index" its plain and ordinary meaning.

4. U.S. Patent No. 8,209,317

a. "submitted" (Claims 1, 2, 4, 5, 8, 11-14)

R2 Solutions' Construction	Defendant's Construction
"submitted by a conscious and deliberate act, and not just by entering text"	"entered and transmitted by entering a carriage return or by otherwise committing a deliberate act of submission"

The Court should construe "submitted" as "submitted by a conscious and deliberate act, and not just by entering text." In response to an office action during the prosecution of a related patent, the applicant argued that the "user's act of **submitting** the search query is a conscious and deliberate act and is different from … a user entering text." Ex. 10 at 17 (emphasis in original); *see also id*. at 7. R2's proposal respects the applicant's representations regarding the scope of the inventions.

AA's construction, on the other hand, goes beyond the applicant's description of "submitting" and would replace the word "submitted" with "transmitted and entered." But nothing in the referenced prosecution history supports doing so. The relevant portions of the prosecution history do not use the term "transmitted" at all, and often use "entered" in

conjunction with "submitted," indicating that the terms are different. *See id*. ("[T]he partial query is not a guess at what the user is entering but it is, in fact, what the user *entered and submitted*…." (emphasis added)). AA's construction also improperly includes "entering a carriage return." *See* Ex. 5, ¶¶157–158. While the applicant indicated that a "carriage return" is one way of submitting a partial query, it made clear that a carriage return was just an example and there are other ways of submitting a partial query. *See* Ex. 10 at 7 ("for example by entering an abbreviated text string an [sic] then entering a carriage return or 'send' etc."). The Court should therefore reject AA's proposed construction and adopt R2's instead.

b. "query data management server" (Claims 4, 5)

R2 Solutions' Construction	Defendant's Construction
Plain and ordinary meaning.	"a server that analyzes historic query data"

The Court should give the term "query data management server" its plain and ordinary meaning. The claims themselves explain what a "query data management server" is. For example, Claim 4 requires that the "query data management server" be in "data communication" with the other servers of Claim 1 and be "operative to provide to the query reconstruction server the information stored in the database about queries previously-submitted by users." Claim 5 requires that the "query data management server" be configured to "retrieve … historical query data," "build a query index," "store the query index," and "provide the query index" to the "query reconstruction server." Claim 6 requires the "query data management server" to "filter the retrieved information about the queries." Claim 7 requires the "query data management server" to "select … most popular queries." *See* Ex. 4 at Claims 4–7. The specification contains additional disclosure that is consistent with the claim language. *See id*. at Fig. 3, 3:60 – 4:14. A POSA would thus readily understand the obvious meaning of the term, i.e., a server that manages query data, such as in the ways explicitly delineated in the claims.

AA argues that its narrow construction is appropriate because the specification states that "[q]uery data management server 320 may analyze historic query data." *Id.* at 4:6-7. In other words, AA appears to be arguing that the '317 patent defines "query data management server" as "a server that analyzes historic query data." But the passage does not rise to the level of lexicography. *Thorner*, 669 F.3d at 1365. Indeed, it only says that the query data management server "*may* analyze historic query data"—not that it is *required* to do so. The Court should therefore reject AA's proposal and instead give "query data management server" its plain and ordinary meaning.

c. "storing in memory data about previously received queries at the computer database system" (Claim 8)

R2 Solutions' Construction	Defendant's Construction
Plain and ordinary meaning.	"data stored in the memory of a server of the computer database system about previous queries submitted by users"

The Court should give the phrase "storing in memory data about previously received queries at the computer database system" its plain and ordinary meaning. As written, the phrase is well within a POSA's and a jury's ability to understand it. It recites a method step with conventional terminology that reflects actions and entities common to computer database systems and search technologies. *See* Ex. 4 at Claim 8. Further, the specification provides an "exemplary architecture" in the form of Figure 1 and walks through how such architecture can be used in the context of the disclosure, using the same common vernacular such as "storing," "database," etc. that is found in the disputed phrase. *See id*. at 2:35 – 3:8. It is simply unnecessary to construe such a plain expression.

AA's construction is wrong on several different levels. First, it is nonsensical. The disputed phrase is a present participle phrase constituting a method step, but AA's construction is

a noun phrase that cannot grammatically serve as a method step. Second, AA's proposal improperly imports several terms that clarify nothing about the phrase, but instead grossly limit its scope, such as by requiring the "memory" to be on a "server." Third, AA improperly limits "previously received queries" to "previous queries submitted by users," arguing that "received queries" is a "mirror image of 'submitted' queries." Ex. 5, ¶ 161. Setting aside the motive for making the switch, this simply is not the case. The patent uses "received queries" and "submitted queries" distinctively in the claims. For example, Claim 8 recites the disputed phrase which includes the term "received queries," and then later recites "receiving … a partial query submitted by a user." In other words, the term "submitted" is found nowhere in the disputed phrase, but is found later in the same claim, highlighting the distinction.

In essence, AA attempts to import limitations from an entirely different term into the disputed phrase, but this has no basis in law and ignores clear claim language. The Court should construe the disputed phrase to have its plain and ordinary meaning and reject AA's construction.

d. "better representative of the entire search query desired by the user" / "not fully representative of an entire search query desired by the user" (Claims 1, 8)

R2 Solutions' Construction	Defendant's Construction
Plain and ordinary meaning.	Indefinite.

The Court should give the phrases "better representative of the entire search query desired by the user" and "not fully representative of an entire search query desired by the user" their plain and ordinary meanings, just as it did in the prior litigation. *See* Ex. 6 at 60–62. In arguing indefiniteness, AA repeats the same arguments already rejected by this Court. *See* Ex. 5, ¶¶ 163–165. As the Court held previously, "the claims do not use these terms in isolation but

rather in relation to each other and with regard to a 'partial query.'" *Id*. at 62. Thus, these phrases are "readily understandable" in the context of the patent itself. *Id*.

e. "a database configured to store information about events in the computer database system" (Claim 1)

R2 Solutions' Construction	Defendant's Construction
Plain and ordinary meaning.	Indefinite.

The Court should give the phrase "a database configured to store information about events in the computer database system" its plain and ordinary meaning. AA's argument that the phrase is "unclear" ignores the substance of the patent. Ex. 5, ¶ 167. As an initial matter, "events" is a common word that is easily understandable, so it seems silly to suggest that a POSA would be baffled by it. Further, the claims themselves lend meaning. Claim 1 recites "a database configured to store information about events in the computer database system," and requires "determin[ation of] a full query based on … (ii) information stored in the database about queries previously-submitted by users." Claim 2 recites that the server "is further operative to determine as the full query the most frequently submitted, previously-submitted query…." A POSA would thus understand that the "events" in the database include queries previously submitted by users.

This understanding is consistent with the specification. For example, the specification discusses "frequency counts" associated with given queries, and step 420 of Fig. 4 is "Select Most Popular Queries." *See* Ex. 4 at 4:20–22. Fig. 5 depicts an "exemplary one-word index" that includes "a frequency 520 for each filtered query." *Id*. at 4:54-56. The specification thus makes clear that the database tracks information about queries submitted by users. A POSA would have no trouble understanding the term "events." The Court should reject AA's argument and should give "events" its plain and ordinary meaning.

V. CONCLUSION

For the foregoing reasons, R2 respectfully requests that this Court adopt R2's constructions as proposed herein.

Dated: February 21, 2023

Respectfully submitted,

/s/ Edward R. Nelson III
EDWARD R. NELSON, III
STATE BAR NO. 00797142
BRENT N. BUMGARDNER
STATE BAR NO. 00795272
CHRISTOPHER G. GRANAGHAN
STATE BAR NO. 24078585
JOHN P. MURPHY
STATE BAR NO. 24056024
CARDER W. BROOKS
STATE BAR NO. 24105536

NELSON BUMGARDNER CONROY PC
3131 West 7th Street, Suite 300
Fort Worth, Texas 76107
817.377.9111 (telephone)
ed@nelbum.com
brent@nelbum.com
chris@nelbum.com
murphy@nelbum.com
carder@nelbum.com

COUNSEL FOR PLAINTIFF
R2 SOLUTIONS LLC

CERTIFICATE OF SERVICE

I hereby certify that a true and correct copy of the above and foregoing document has been delivered to all counsel of record on this the 21st day of February, 2023.

/s/ Edward R. Nelson III

American Airlines/Hilton, Ex. 1040, p.32
American Airlines/Hilton v. R2 Solutions
IPR2023-00690