US009330531B1

(12) **United States Patent**
Wakeford et al.

(10) **Patent No.: US 9,330,531 B1**
(45) **Date of Patent: May 3, 2016**

(54) **SYSTEM AND METHOD FOR DISPLAYING A GAME USING A PRIMARY DISPLAY AND COMMUNICATING ALLIANCE INFORMATION AMONG ALLIANCE MEMBERS USING A SECONDARY DISPLAY**

(71) Applicants: **Kent Wakeford**, Hillsborough, CA (US); **Clifford J. Harrington**, San Francisco, CA (US)

(72) Inventors: **Kent Wakeford**, Hillsborough, CA (US); **Clifford J. Harrington**, San Francisco, CA (US)

(73) Assignee: **KABAM, INC.**, San Francisco, CA (US)

(*) Notice: Subject to any disclaimer, the term of this patent is extended or adjusted under 35 U.S.C. 154(b) by 126 days.

(21) Appl. No.: **13/828,469**

(22) Filed: **Mar. 14, 2013**

(51) **Int. Cl.**
A63F 13/12 (2006.01)
G07F 17/32 (2006.01)
A63F 13/30 (2014.01)

(52) **U.S. Cl.**
CPC ***G07F 17/3225*** (2013.01); *A63F 13/12* (2013.01); *A63F 2300/301* (2013.01); *A63F 2300/408* (2013.01); *A63F 2300/556* (2013.01); *A63F 2300/5533* (2013.01); *A63F 2300/6045* (2013.01)

(58) **Field of Classification Search**
CPC ... H04L 67/38; A63F 13/12; A63F 2300/556; A63F 2300/5533; A63F 2300/1043; A63F 2300/301; A63F 2300/408; A63F 2300/6045
USPC 463/42; 700/94
See application file for complete search history.

(56) **References Cited**

U.S. PATENT DOCUMENTS

6,567,984 B1 5/2003 Allport 725/110
6,878,067 B2 4/2005 Blanco
7,047,030 B2 5/2006 Forsyth 455/518
7,194,754 B2 3/2007 Tomsen et al. 725/60
7,580,005 B1 8/2009 Palin
7,637,813 B2 12/2009 Katayama et al. 463/31
8,156,004 B2 4/2012 Wajihuddin 705/14.5
8,226,476 B2 7/2012 Haltovsky et al. 463/30
8,270,641 B1 9/2012 Greenberg 381/306
8,282,490 B2 10/2012 Arezina et al. 463/42
2002/0110246 A1 * 8/2002 Gosior et al. 381/2
2003/0013527 A1 * 1/2003 Rowe et al. 463/42
2003/0216181 A1 11/2003 Danieli et al. 463/39

(Continued)

OTHER PUBLICATIONS

Wii U Official Site—Built in Software, Nintendo, http://www.nintendo.com/wiiu/built-in-software/*/eshop, printed Feb. 16, 2013, 5 pages.

(Continued)

Primary Examiner — Michael Cuff
(74) *Attorney, Agent, or Firm* — Sheppard Mullin Richter & Hampton LLP

(57) **ABSTRACT**

The disclosure relates to systems and methods for communicating a primary display comprising information that facilitates visual presentation of a view of a game space to a primary client device and facilitating communication of alliance information among members of an alliance through a secondary client device such as a user's smartphone. The system may include a game device that allows a user to play a video game or otherwise interact with a virtual environment, and send or receive alliance information using the primary client device and send or receive alliance information using a secondary client device while playing the video game using the primary client device. The primary client device or the secondary client device may also be used to control actions taken by the alliance. Thus, alliance control may be facilitated using either or both of the primary client device and the secondary client device.

14 Claims, 9 Drawing Sheets

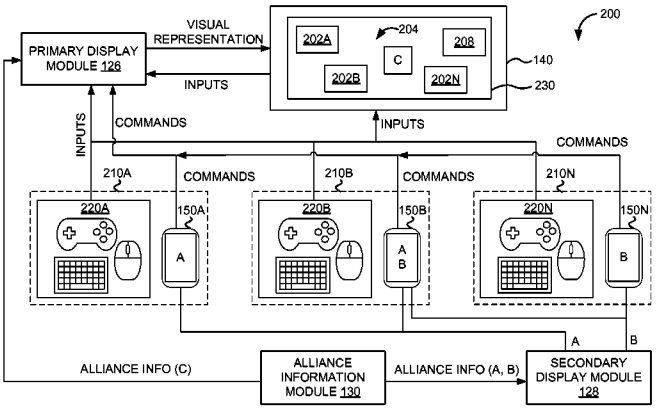

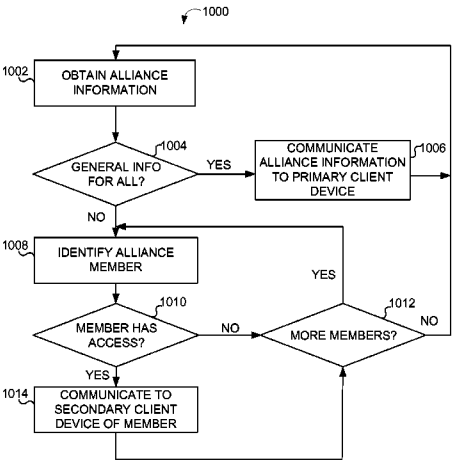

(56) **References Cited**

U.S. PATENT DOCUMENTS

2006/0111188	A1	5/2006	Winkler	
2007/0021192	A1	1/2007	Tamimoto	
2007/0087831	A1	4/2007	Luchene	
2007/0265073	A1	11/2007	Novi	
2008/0026849	A1	1/2008	Bird	463/42
2008/0214273	A1	9/2008	Snoddy et al.	463/19
2009/0098940	A1*	4/2009	Sangberg	463/42
2009/0264190	A1*	10/2009	Davis et al.	463/26
2010/0056280	A1	3/2010	Langan et al.	463/42
2010/0069158	A1	3/2010	Kim	
2010/0099471	A1*	4/2010	Feeney et al.	463/1
2010/0178973	A1	7/2010	Snoddy et al.	463/19
2010/0185721	A1	7/2010	Merrifield	
2010/0267448	A1	10/2010	Snoddy et al.	463/30
2011/0092271	A1*	4/2011	Nguyen	463/25
2011/0143835	A1	6/2011	Sizelove	463/31
2012/0038742	A1	2/2012	Robinson et al.	348/14.16
2012/0038827	A1	2/2012	Davis	
2012/0059795	A1*	3/2012	Hersh et al.	707/628
2012/0220354	A1	8/2012	Haltovsky	
2012/0249591	A1	10/2012	Maciocci et al.	345/633
2012/0270646	A1	10/2012	Walker et al.	463/29
2012/0304584	A1	12/2012	Pan	
2013/0046781	A1	2/2013	Frankel	
2013/0053144	A1	2/2013	Nicely	463/35
2013/0072308	A1	3/2013	Peck	
2013/0246942	A1	9/2013	Merrifield	
2013/0254680	A1*	9/2013	Buhr et al.	715/753
2014/0176534	A1	6/2014	Vignocchi	

OTHER PUBLICATIONS

AMD Eyefinity Technology, http://www.amd.com/us/products/technologies/amd-eyefinity-technology/pages/eyefinity.a . . . , printed Feb. 13, 2013, 1 page.

* cited by examiner

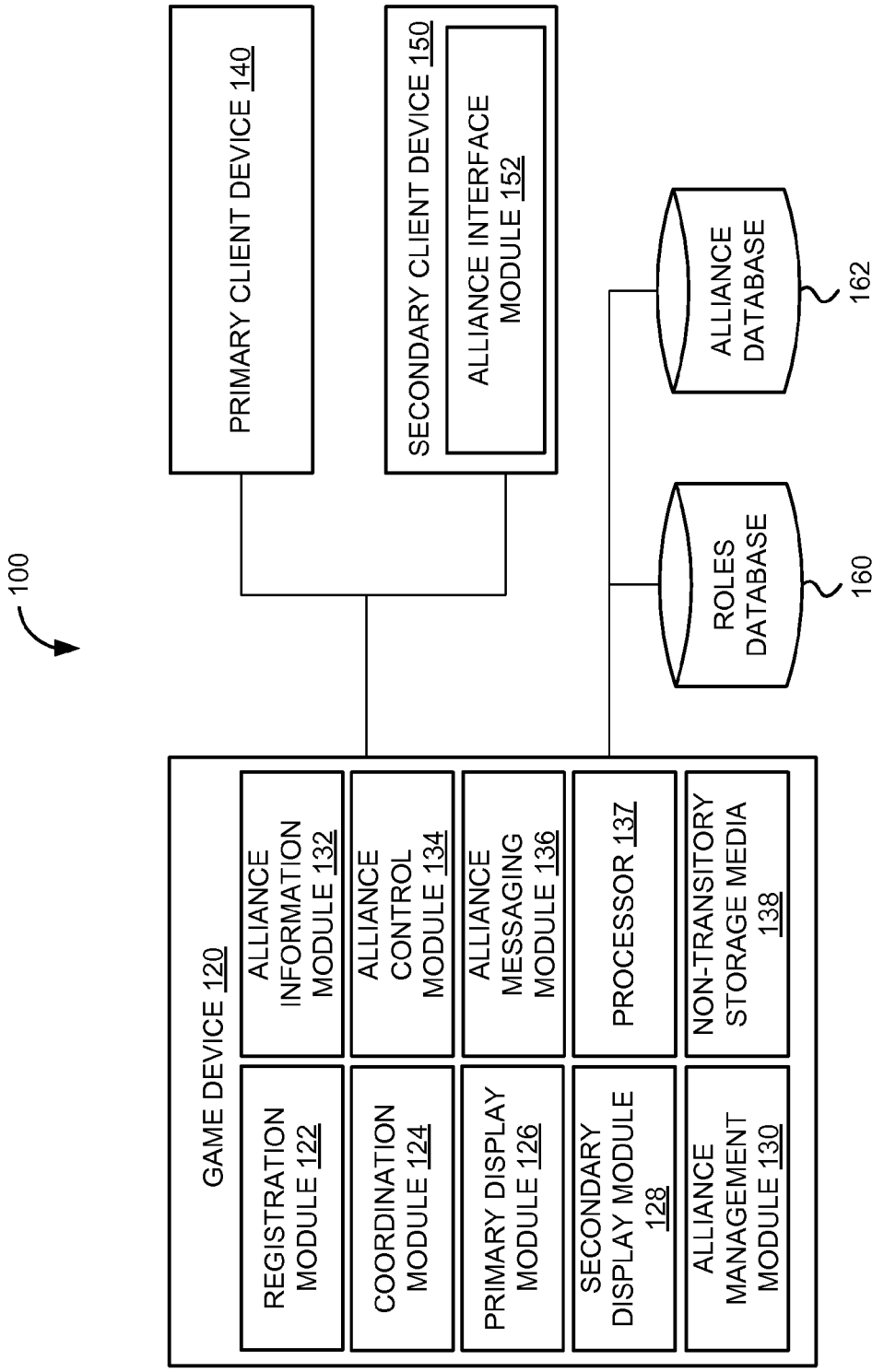
100
PRIMARY CLIENT DEVICE 140
SECONDARY CLIENT DEVICE 150
ALLIANCE INTERFACE MODULE 152
ROLES DATABASE
160
ALLIANCE DATABASE
162
GAME DEVICE 120
REGISTRATION MODULE 122
ALLIANCE INFORMATION MODULE 132
COORDINATION MODULE 124
ALLIANCE CONTROL MODULE 134
PRIMARY DISPLAY MODULE 126
ALLIANCE MESSAGING MODULE 136
SECONDARY DISPLAY MODULE 128
PROCESSOR 137
ALLIANCE MANAGEMENT MODULE 130
NON-TRANSITORY STORAGE MEDIA 138

FIG. 1

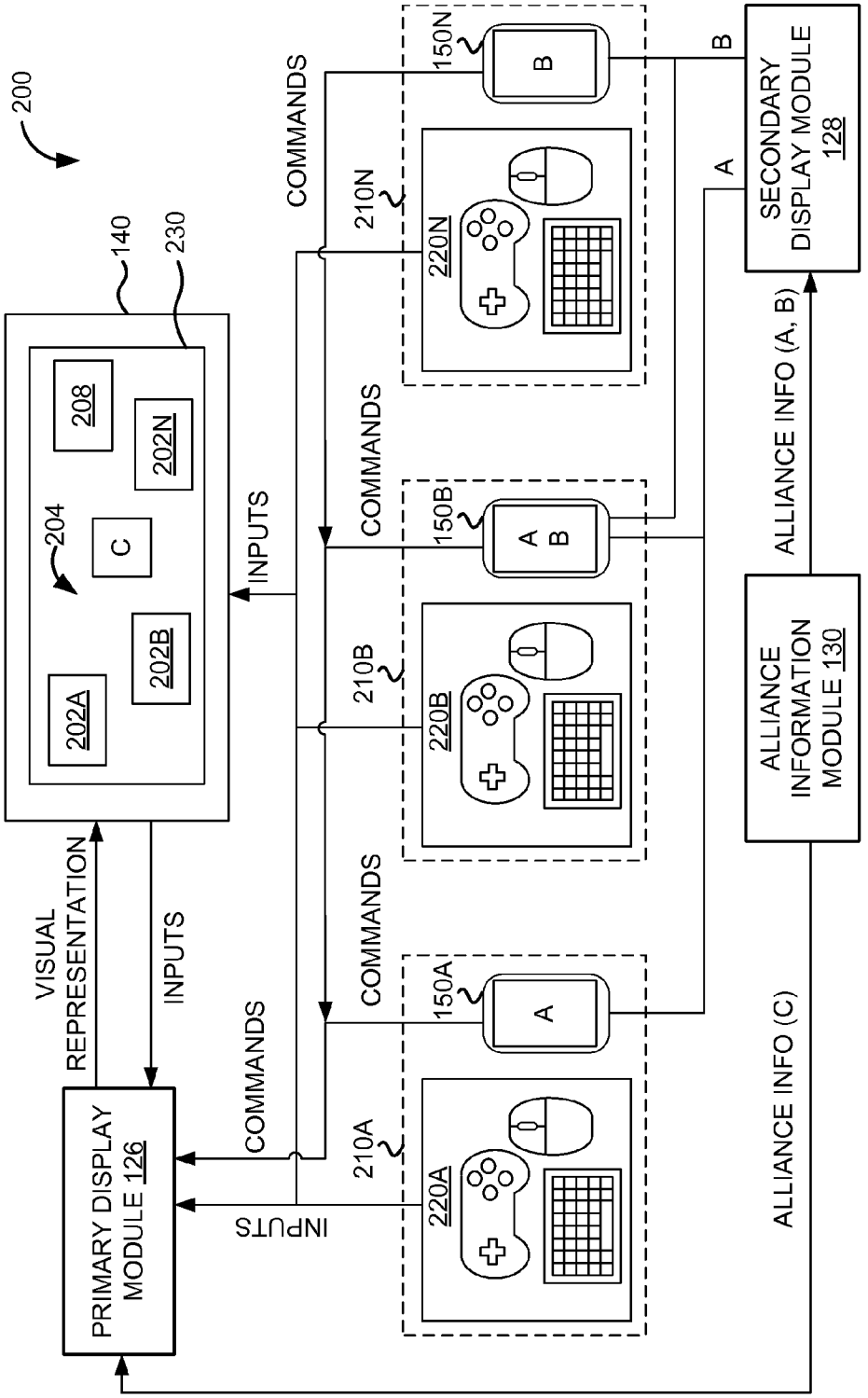
200
140
230
208
202N
204
C
202B
202A
VISUAL REPRESENTATION
INPUTS
PRIMARY DISPLAY MODULE 126
COMMANDS
INPUTS
COMMANDS
COMMANDS
COMMANDS
210A
220A
150A
A
210B
220B
150B
A
B
210N
220N
150N
B
A
B
SECONDARY DISPLAY MODULE 128
ALLIANCE INFO (A, B)
ALLIANCE INFORMATION MODULE 130
ALLIANCE INFO (C)

FIG. 2

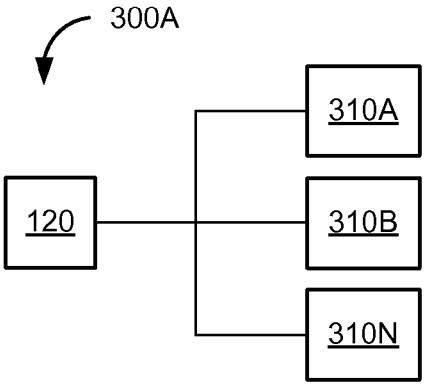

FIG. 3A

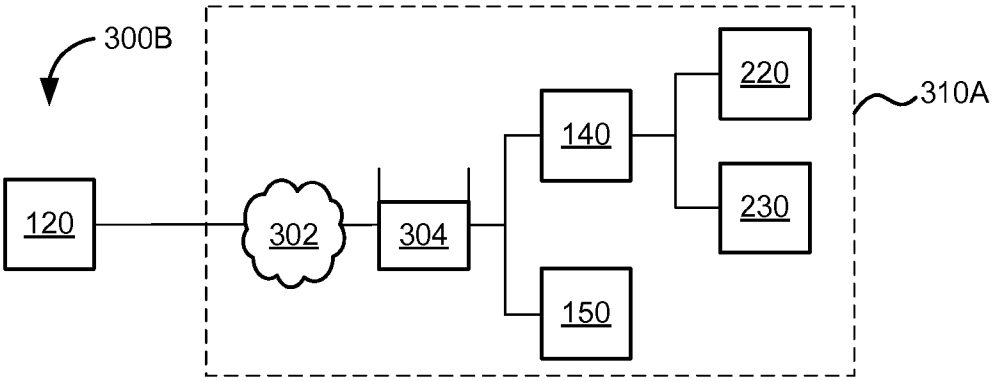

FIG. 3B

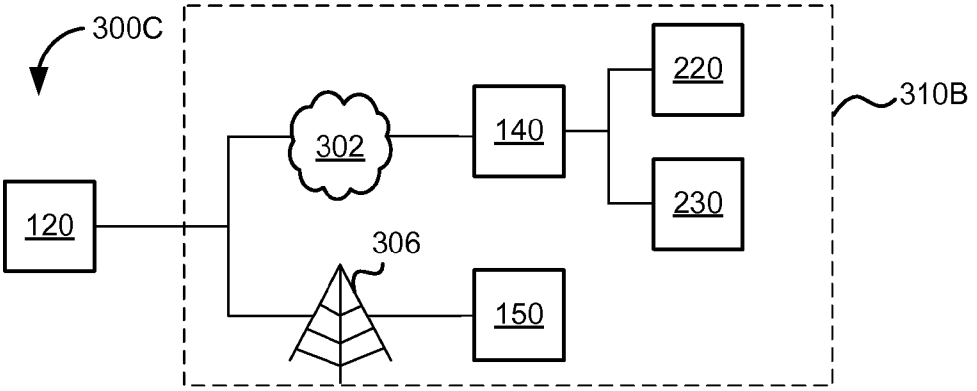

FIG. 3C

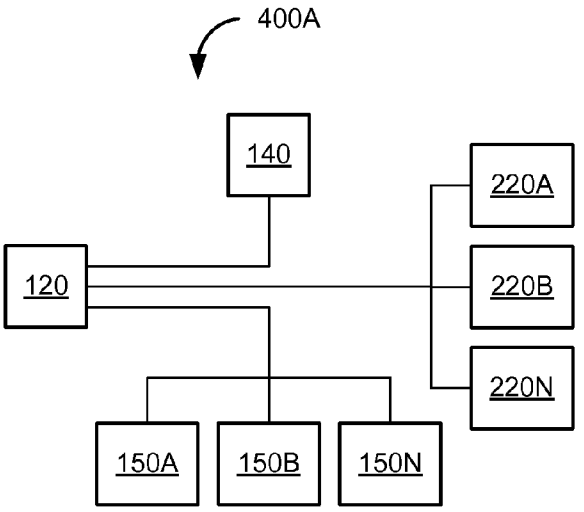
400A
140
220A
120
220B
220N
150A
150B
150N

FIG. 4A

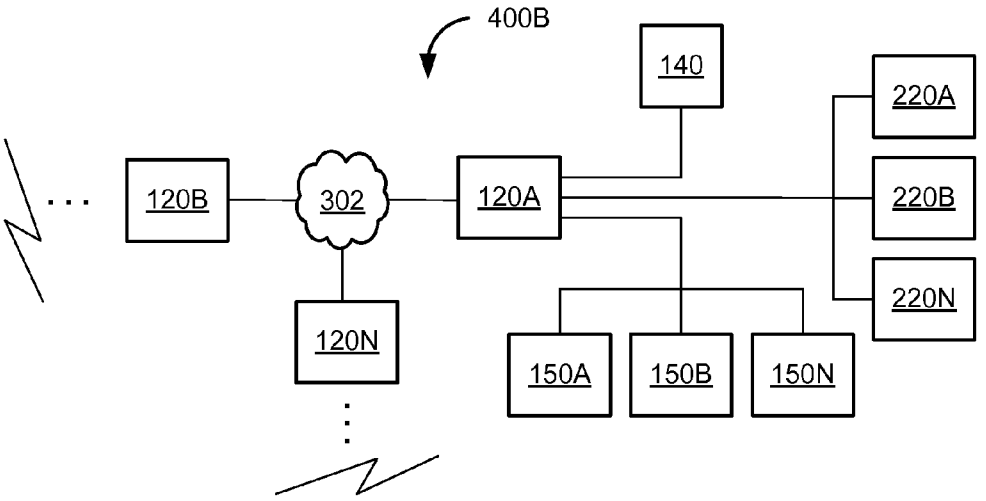
400B
140
220A
120B
302
120A
220B
220N
120N
150A
150B
150N

FIG. 4B

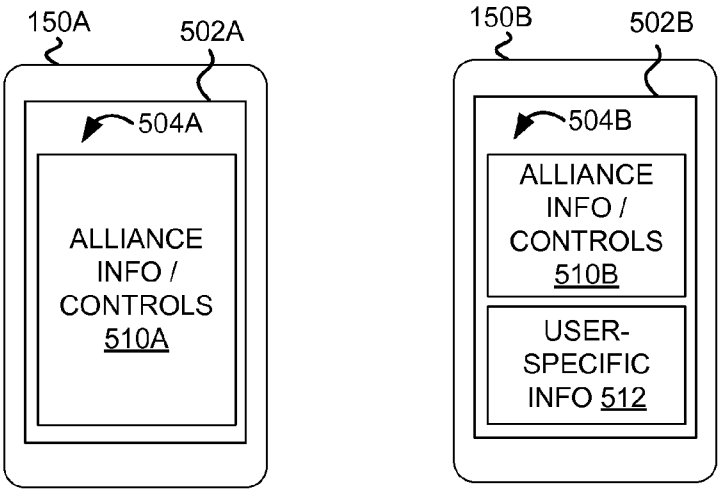
150A
502A
504A
ALLIANCE INFO / CONTROLS 510A
150B
502B
504B
ALLIANCE INFO / CONTROLS 510B
USER-SPECIFIC INFO 512

FIG. 5

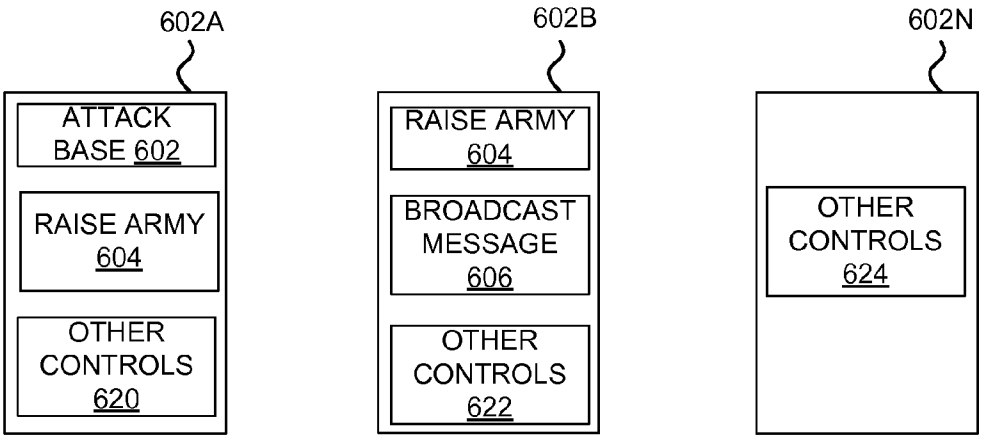
602A
ATTACK BASE 602
RAISE ARMY 604
OTHER CONTROLS 620
602B
RAISE ARMY 604
BROADCAST MESSAGE 606
OTHER CONTROLS 622
602N
OTHER CONTROLS 624

FIG. 6

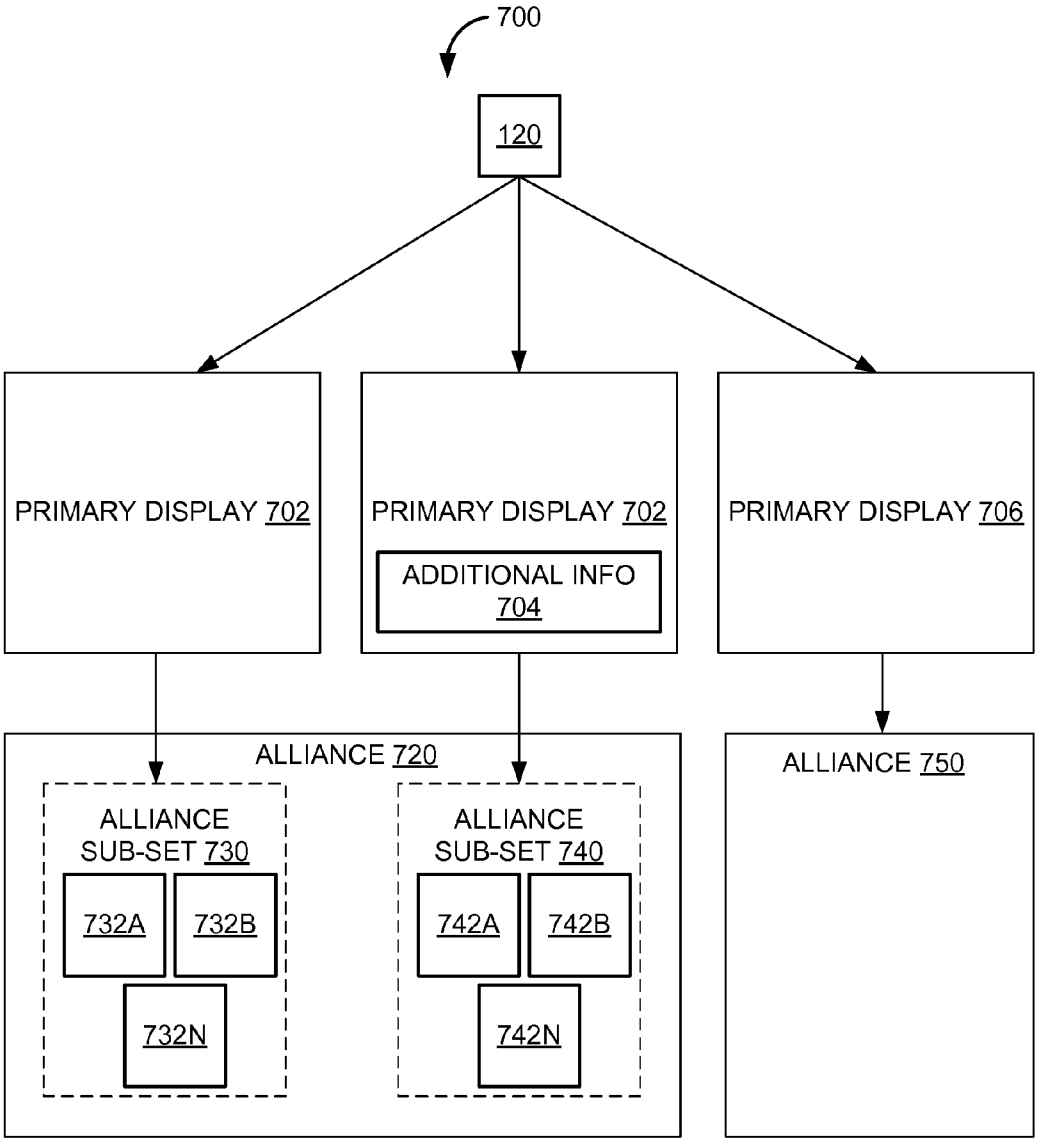
700
120
PRIMARY DISPLAY 702
PRIMARY DISPLAY 702
ADDITIONAL INFO 704
PRIMARY DISPLAY 706
ALLIANCE 720
ALLIANCE SUB-SET 730
732A
732B
732N
ALLIANCE SUB-SET 740
742A
742B
742N
ALLIANCE 750

FIG. 7

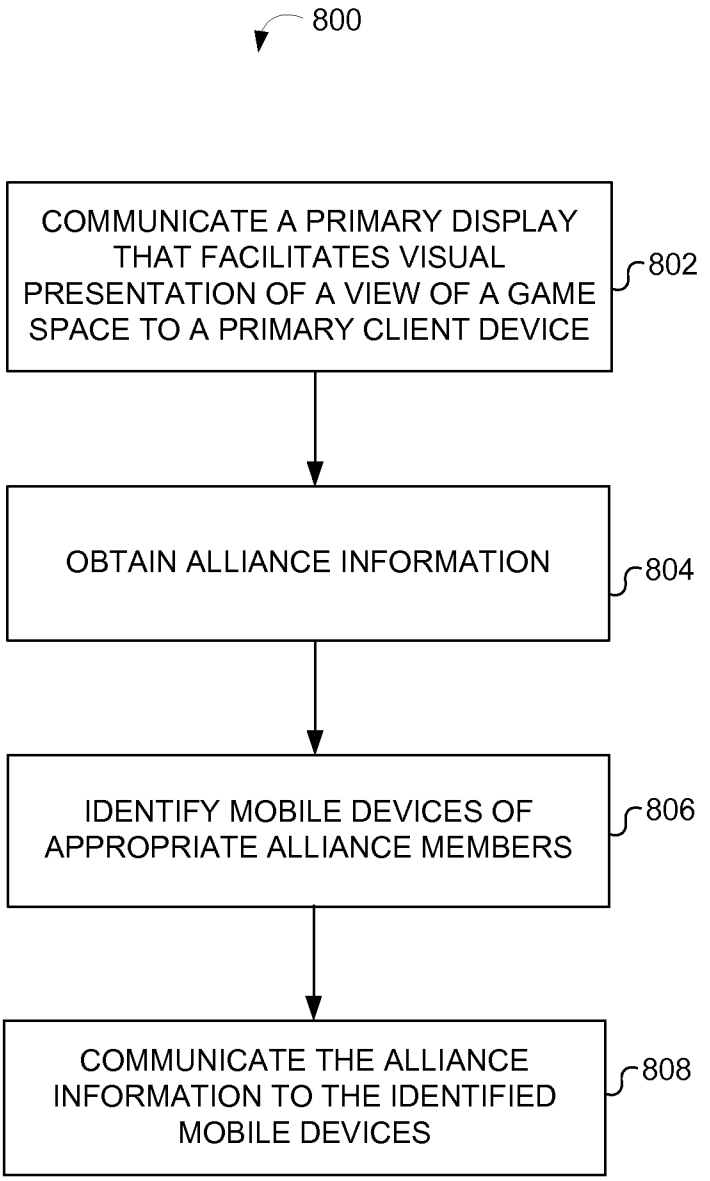
800
COMMUNICATE A PRIMARY DISPLAY THAT FACILITATES VISUAL PRESENTATION OF A VIEW OF A GAME SPACE TO A PRIMARY CLIENT DEVICE
802
OBTAIN ALLIANCE INFORMATION
804
IDENTIFY MOBILE DEVICES OF APPROPRIATE ALLIANCE MEMBERS
806
COMMUNICATE THE ALLIANCE INFORMATION TO THE IDENTIFIED MOBILE DEVICES
808

FIG. 8

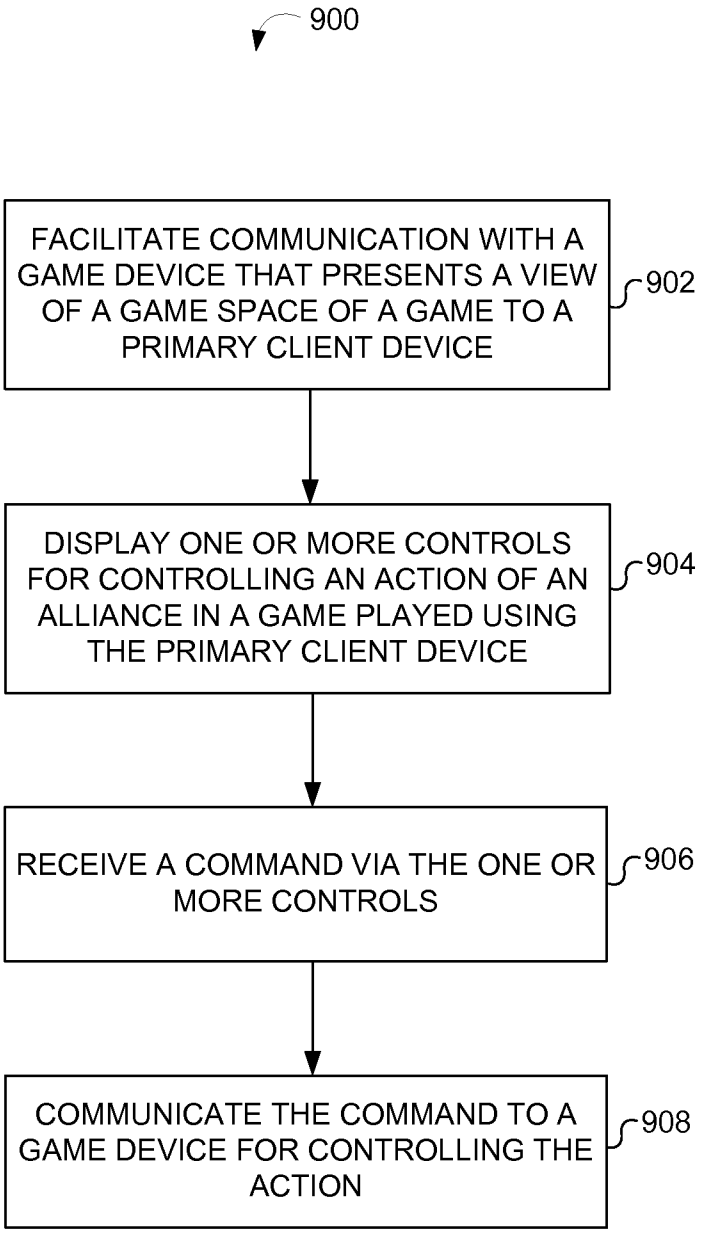
900
FACILITATE COMMUNICATION WITH A GAME DEVICE THAT PRESENTS A VIEW OF A GAME SPACE OF A GAME TO A PRIMARY CLIENT DEVICE
902
DISPLAY ONE OR MORE CONTROLS FOR CONTROLLING AN ACTION OF AN ALLIANCE IN A GAME PLAYED USING THE PRIMARY CLIENT DEVICE
904
RECEIVE A COMMAND VIA THE ONE OR MORE CONTROLS
906
COMMUNICATE THE COMMAND TO A GAME DEVICE FOR CONTROLLING THE ACTION
908

FIG. 9

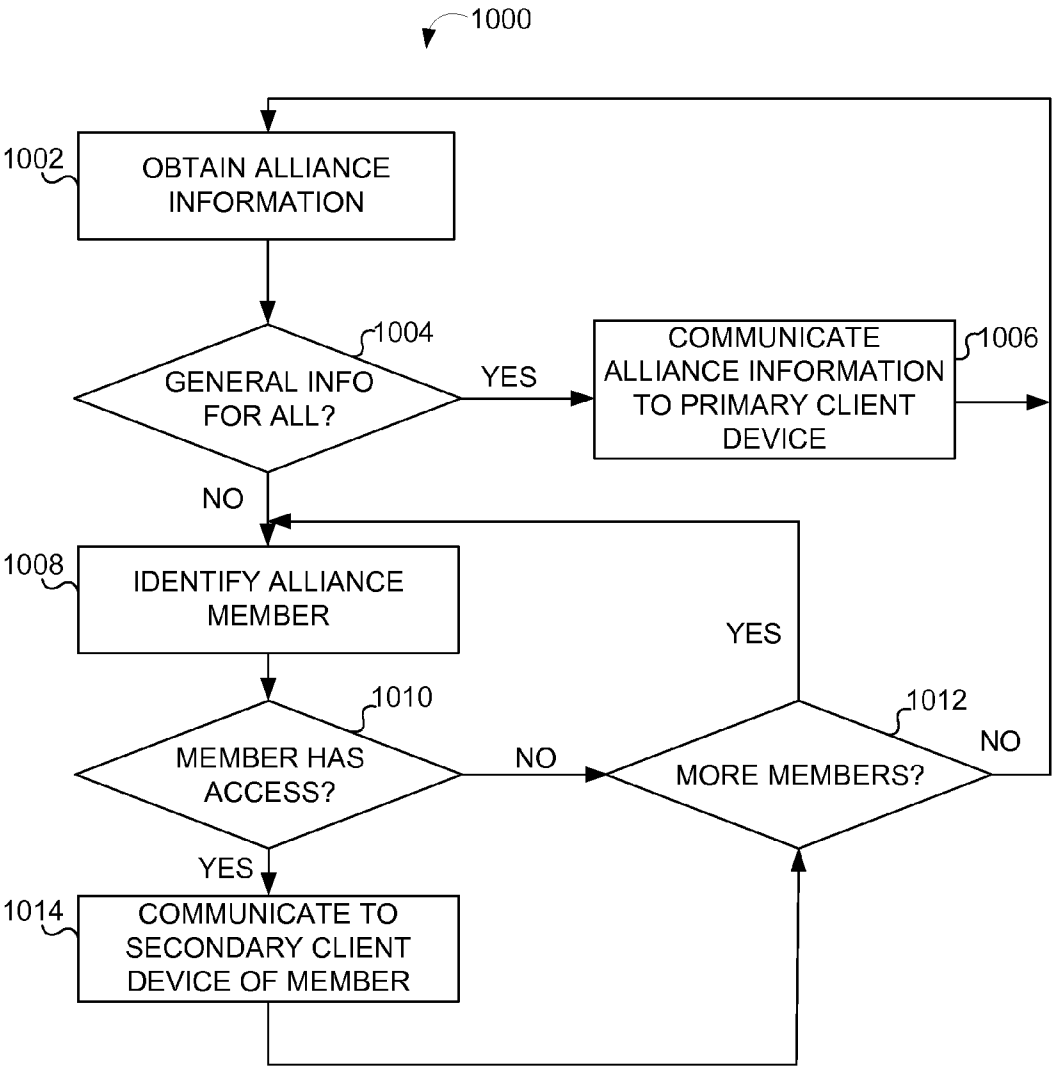
1000
1002
OBTAIN ALLIANCE INFORMATION
1004
GENERAL INFO FOR ALL?
YES
COMMUNICATE ALLIANCE INFORMATION TO PRIMARY CLIENT DEVICE
1006
NO
1008
IDENTIFY ALLIANCE MEMBER
YES
1010
MEMBER HAS ACCESS?
NO
1012
MORE MEMBERS?
NO
YES
1014
COMMUNICATE TO SECONDARY CLIENT DEVICE OF MEMBER

FIG. 10

SYSTEM AND METHOD FOR DISPLAYING A GAME USING A PRIMARY DISPLAY AND COMMUNICATING ALLIANCE INFORMATION AMONG ALLIANCE MEMBERS USING A SECONDARY DISPLAY

FIELD OF THE INVENTION

The disclosure relates to systems and methods for communicating a primary display comprising information that facilitates visual presentation of a view of a game space to a primary client device and facilitating communication of alliance information among members of an alliance through a secondary client device such as a user's smartphone.

BACKGROUND OF THE INVENTION

Multi-user games and other applications that display a virtual space may allow users to form alliances with one another (e.g., avatars or other user-controlled objects may form alliances at the direction of users playing the game). An alliance may be formed to pool assets or otherwise coordinate actions of individual alliance members. An alliance is often made more effective when communication of alliance information is timely made to alliance members. Communication of alliance information is conventionally provided using only a single display, which may be communicated to all alliance members. However, providing alliance information over a single display, which may be shared among all alliance members, may be problematic. For example, it may be beneficial to restrict access of certain alliance information to some alliance members, such as alliance leaders or users who have been alliance members for a long period of time, but not others.

SUMMARY OF THE INVENTION

The disclosure relates to systems and methods for communicating a primary display comprising information that facilitates visual presentation of a view of a game space to a primary client device and facilitating communication of alliance information among members of an alliance through a secondary client device such as a user's smartphone. The system may include a game device that allows a user to play a video game or otherwise interact with a virtual environment, and send or receive alliance information using the primary client device and send or receive alliance information using a secondary client device while playing the video game using the primary client device. The primary client device or the secondary client device may also be used to control actions taken by the alliance. Thus, alliance control may be facilitated using either or both of the primary client device and the secondary client device.

The game device may be configured to coordinate the primary client device and the secondary client device such that gameplay and alliance information communicated during gameplay are associated with the given user playing the game. In this manner, a user may control one or more graphical objects within the game space through the primary client device and send/receive alliance information through the primary client device and/or the secondary client device.

In some embodiments, the game device may determine whether to communicate the alliance information to the primary client device and/or the secondary client device based on one or more factors. For example, the game device may make the determination based on whether the alliance information is generally available to all alliance members (in which case the alliance information may be communicated to the primary client device or the secondary client device). On the other hand, alliance information that is restricted to only certain alliance members may be communicated to one or more secondary client devices operated by the appropriate alliance members. In this manner, communication of restricted alliance information may be limited to alliance members having access to the restricted alliance information.

In some embodiments, the game device may determine whether to communicate alliance information to the primary client device or the secondary client device based on roles assigned to particular alliance information or categories of alliance information. For example, a user may indicate that certain alliance information or categories of alliance information should be communicated to primary client devices, secondary client devices, or both primary and secondary client devices.

In some embodiments, the game device may determine whether to communicate alliance information to the primary client device or the secondary client device based on particular architectures being used to play the game. For example, certain users may not be operating secondary client devices (e.g., are using only primary client devices to play the game) while other users are operating secondary client devices. In these embodiments, the game device may take into consideration whether a given user is playing the game using a secondary client device in addition to the primary client device.

In some embodiments, the game device may categorize alliance information based on input from an alliance member such as a leader of the alliance. Certain categories of information (e.g., alliance information that describes inventory levels of alliance assets, alliance information that are communications between leaders of an alliance, etc.) may be restricted such that only some alliance members may view or otherwise interact with the restricted alliance information. Another category of alliance information may generally available to all alliance members. Other categories of alliance information may be used as well. Similarly, particular alliance information may be categorized as well, such as a particular inventory level of a particular asset or a particular communication between alliance members.

In some embodiments, the primary client device and/or the secondary client device may present one or more controls for controlling an action of the alliance. A user of the primary and/or the secondary client device may provide inputs through the controls to generate one or more commands or otherwise cause the action of the alliance. Certain controls may be provided to some alliance members but not others. The logic for determining which controls to present to the different alliance members may reside at the game device, the primary client device, and/or the secondary client device.

These and other objects, features, and characteristics of the system and/or method disclosed herein, as well as the methods of operation and functions of the related elements of structure and the combination of parts and economies of manufacture, will become more apparent upon consideration of the following description and the appended claims with reference to the accompanying drawings, all of which form a part of this specification, wherein like reference numerals designate corresponding parts in the various figures. It is to be expressly understood, however, that the drawings are for the purpose of illustration and description only and are not intended as a definition of the limits of the invention. As used in the specification and in the claims, the singular form of "a", "an", and "the" include plural referents unless the context clearly dictates otherwise.

BRIEF DESCRIPTION OF THE DRAWINGS

FIG. **1** illustrates a system configured to provide a primary display that includes a game space and a secondary display

that facilitates communication of alliance information while the game space is displayed via the primary display, according to an embodiment of the invention.

FIG. **2** illustrates an example of a block diagram showing data flows between various components for displaying a game using a primary display and facilitating communication of alliance information and alliance controls using a secondary display, according to an embodiment of the invention.

FIG. **3**A illustrates a block diagram of multiple architectures for interacting with a game device, according to an embodiment of the invention.

FIG. **3**B illustrates a block diagram of a first particular architecture for interacting with the game device, according to an embodiment of the invention.

FIG. **3**C illustrates a block diagram of a second particular architecture for interacting with the game device, according to an embodiment of the invention.

FIG. **4**A illustrates a block diagram of an example of a game device locally coupled to a primary client device, one or more input devices, and one or more secondary client devices, according to an embodiment of the invention.

FIG. **4**B illustrates a block diagram of an example of game devices coupled to one another over a network and individually being locally coupled to a primary client device, one or more input devices, and one or more secondary client devices, according to an embodiment of the invention.

FIG. **5** illustrates examples of secondary displays communicated to and displayed at a secondary client device, according to an embodiment of the invention.

FIG. **6** illustrates examples of different controls displayed on a display device, according to an embodiment of the invention.

FIG. **7** illustrates examples of primary displays corresponding to respective alliances and sub-sets of alliances, according to an embodiment of the invention.

FIG. **8** illustrates a flowchart of a process for facilitating a multi-user game that allows users to form alliances and communicating alliance information during the game to mobile devices associated with alliance members, according to an embodiment of the invention.

FIG. **9** illustrates a flowchart of a process for displaying alliance information including controls for the alliance on a secondary client device, according to an embodiment of the invention.

FIG. **10** illustrates a flowchart of a process for selectively communicating alliance information to a primary client device and/or to a secondary client device, according to an embodiment of the invention.

DETAILED DESCRIPTION OF THE INVENTION

FIG. **1** illustrates a system **100** configured to provide a primary display that includes a game space and a secondary display that facilitates communication of alliance information while the game space is displayed via the primary display, according to an embodiment of the invention. Alliance information may include information related to a status of the alliance, inventory levels of alliance assets, position of alliance assets, communications, commands for controlling the alliance or assets of the alliance, and/or other information related to the alliance. Sharing alliance information may facilitate coordination, resource management, communication, and/or other benefits for the alliance.

At least some alliance information may be categorized such that some alliance members may have access to certain categories of alliance information while other alliance members do not. Such access may be defined by roles assigned to alliance members, as described in more detail below.

As used herein, a "user" may include a game player that may be represented by an avatar or other graphical representation in the game space and may be identified by a user handle or other identifier. An "alliance member" may include a user who is a member of or otherwise affiliated with an alliance.

System **100** may include a game device **120**, a primary client device **140**, a secondary client device **150**, and/or other components. Although only a single game device **120**, a single primary client device **140**, and a single secondary client device **150** is illustrated in FIG. **1**, other numbers of the foregoing devices may be used and other configurations of system **100** may be used, examples of which are illustrated in FIGS. **3**A-**3**C and FIGS. **4**A and **4**B.

Game device **120** may include one or more processors **137** configured to execute one or more modules such as a registration module **122**, a coordination module **124**, a primary display module **126**, a secondary display module **128**, an alliance management module **130**, an alliance information module **132**, an alliance control module **134**, an alliance messaging module **136**, and/or other modules.

In some embodiments, registration module **122** may be configured to register a user with the system. For example, registration module **122** may obtain user information such as a name, age, game handle (e.g., virtual name), credential information (e.g., username, password, keys), and/or other information that describes the user.

To facilitate use of secondary client device **150**, registration module **122** may obtain an identification of the secondary client device. For example, in embodiments where the secondary client device **150** used by a user to send and/or receive alliance information includes the user's mobile device, registration module **122** may obtain an identification of the mobile device such as a Media Access Control address.

In some embodiments, coordination module **124** may be configured to coordinate the activities of primary display module **126** and secondary display module **128**. For example, coordination module **124** may receive a logon, device identifier, and/or other identifying information from the user via primary client device **140** and/or secondary client device **150**.

Coordination module **124** may be configured to manage communication between primary display module **126** and primary client device **140** for communicating a primary display generated by the primary display module. Likewise, coordination module **124** may manage communication between secondary display module **128** and secondary client device **150** for communicating a secondary display generated by the secondary display module.

Coordination module **124** may recognize that the user wishes to initiate a gameplay session using primary client device **140** and secondary client device **150** based on the identifying information received from primary client device **140** and secondary client device **150**. Initiating the gameplay session may include joining an existing online game (e.g., a multi-user online game that operates whether or not a particular user is logged onto the game), initiating a new online game, hosting an online game, initiating a local game, and/or otherwise allowing the user to begin playing the game.

Accordingly, coordination module **124** may initiate and coordinate a gameplay session that is associated with a primary display communicated to primary client device **140** and a secondary display communicated to secondary client device **150**. For example, a gameplay session identifier may be associated with identities of a user, primary client device **140**, and/or secondary client device **150** such that information that

facilitates visual presentation of a view of a game space may be communicated to primary client device **140** and alliance information may be communicated to secondary client device **150** during gameplay. By doing so, coordination module **124** may ensure that game device **120** is able to coordinate gameplay occurring via a primary display communicated to primary client device **140** and alliance information being included on a secondary display communicated to secondary client device **150**.

Coordination of primary client device **140** and the secondary client device **150** may occur in various ways. By way of example only, the user may logon to a gameplay session via both primary client device **140** and secondary client device **150**. For example, primary client device **140** may include a computing device used to connect to game device **120** for playing an online game. Secondary client device **150** may include a smartphone programmed with alliance interface module **152** that communicates with game device **120** for sending/receiving alliance information to be communicated to other secondary client devices and/or primary client devices.

In some embodiments, primary client device **140** and/or secondary client device **150** may be pre-registered with the system, such as via registration module **122** such that game device **120** may recognize either or both devices. For example, upon logging onto the system to start a gameplay session using primary client device **140**, a connection with secondary client device **150** may automatically be established.

Primary display module **126** may be configured to communicate information that facilitates visual presentation of a view of a game space to the user on primary client device **140**. Responsive to the communicated information from primary display module **126**, primary client device **140** may render the visual presentation of the game space such that the user can play the game.

In some embodiments, primary display module **126** may be configured to provide at least some alliance information on the primary display. In these embodiments, at least a portion of the primary display may be reserved for the alliance information and/or alliance information may be overlayed onto other visual presentations of the game space presented on the primary display.

In some embodiments, primary display module **126** may be configured to provide different primary displays to different primary client devices **140**. For example, assuming a communication that is restricted to two leaders of an alliance is to be communicated and the two leaders are sharing a primary display device **140** or using their own respective primary display devices **140** (as indicated by coordination module **124**), a first primary display may be communicated to the primary display device **140** used by the two leaders while a second primary display may be communicated to remaining members of the alliance. Similarly, primary display module **126** may be configured to communicate different primary displays to members of different alliances. In this manner, alliance information that is presented on a primary display may still be kept secret from users who should not have access to such alliance information.

In some embodiments, primary display module **126** may communicate game events such as user inputs from primary client device **140**, inputs from other users in a multi-user game, actions resulting from the inputs, and/or other game events to other modules of game device **120**, such as coordination module **124**. In this manner, various modules of game device **120** may be updated with current game events and act accordingly, as described herein.

In some embodiments, secondary display module **128** may be configured to communicate alliance information for presentation during the game to the user at secondary client device **150**. In some embodiments, the secondary display module **128** may receive, from secondary client device **150**, alliance information to be shared with one or more members of the alliance and/or alliance information that includes a command for controlling one or more aspects of the alliance, such as changing alliance membership, attacking an enemy, acquiring assets, moving alliance assets, declaring war, making peace, and/or other commands that influence a behavior of the alliance. Responsive to the alliance information and/or commands, secondary display module **128** may cause the alliance information to be communicated to appropriate members of the alliance and/or cause the commands to be executed.

In some embodiments, alliance management module **130** may be configured to create alliances, update alliance membership, categorize alliance information, set roles for alliance members, and/or perform other management functions for a given alliance. Alliance management module **130** may create an alliance when two or more users agree form an alliance. Using a primary display communicated to primary client device **140** and/or a secondary display communicated to secondary client device **150**, a user may indicate a desire to form an alliance with at least one other user. Once an alliance is created, alliance management module **130** may update the alliance membership such as by adding new alliance members or deleting alliance members. Alliance memberships and other alliance information may be stored in alliance database **162**.

In some embodiments, alliance management module **130** may categorize alliance information based on input from an alliance member. The categories of alliance information may determine a level of access required to view or otherwise interact with the alliance information. For example, alliance management module **130** may categorize inventory levels of an alliance as being generally open for viewing by all alliance members but categorize communications made between leaders of an alliance as being secured and available for viewing/interacting only by alliance leaders.

In some embodiments, alliance management module **130** may assign one or more roles to a given alliance member. A role may be associated with a level of access to alliance information, different controls for controlling an alliance action, and/or other aspects of the alliance. For example, a role may specify a rank of an alliance member within the alliance such that only certain ranks (e.g., a leader or general) may be granted access alliance information that is reserved for access only by certain ranks. A listing of roles and access levels for which they may relate may be stored in roles database **160**.

In some embodiments, alliance information module **132** may be configured to obtain and provide alliance information to primary display module **126** and/or secondary display module **128** for communication to respective primary client device **140** and/or secondary client device **150**. In some embodiments, alliance information module **132** may determine whether particular alliance information should be provided to primary display module **126** and/or secondary display module **128**. For example, only certain categories of alliance information such as those intended for broadcast to all alliance members may be provided to primary display module **126** for communication to one or more primary client devices **140** while more sensitive categories of alliance information may be provided to secondary display module **128** for

communication to secondary client devices **150** of certain alliance members who have access to the sensitive categories of alliance information.

In some embodiments, alliance information module **132** may receive from one or more alliance members: (i) a communication intended to be broadcast to the all alliance members, (ii) a communication intended to be broadcast to a particular subset of the alliance members (e.g., only alliance members assigned with particular roles), and/or types of communication. For example, an alliance member may generate a communication and indicate that the communication is to be broadcast to all alliance members or just a sub-set of alliance members. Alliance information module **132** may provide the communication to the appropriate one or more alliance members.

In some embodiments, alliance information module **132** may determine that different alliances are to be provided with their own respective alliance-specific information. For example, a first alliance will be provided with alliance information that relates to the first alliance while a second alliance will be provided with alliance information that relates to the second alliance. The first alliance may not have access to the alliance information of the second alliance and vice versa. Alliance information module **132** may identify primary client devices **140** and secondary client devices **150** that are being operated or used by alliance members and therefore cause appropriate alliance-specific information to be communicated to appropriate primary client devices **140** and/or secondary client devices **150**. Alliance information module **132** may make such identifications based on, for example, information from coordination module **124**.

In some embodiments, an alliance may form a treaty or otherwise cooperate with another alliance. For example, a first alliance may form a treaty with another alliance. Alliance information module **132** may provide at least some of the alliance information of the first alliance to the second alliance and vice versa. The first alliance and/or the second alliance may indicate which alliance information is to be shared to the other alliance. Alliance information module **132** may receive these indications and provide alliance information accordingly.

Access to shard alliance information from another alliance may be restricted based on roles of alliance members. For example, a leader of a first alliance may restrict access to particular alliance information of the first alliance to a leader of the second alliance and no other members of the second alliance. As such, alliance information module **132** may provide the particular alliance information only to secondary display module **128** for communication to a secondary client device **150** of the leader of the second alliance. When the treaty has been terminated, alliance information module **132** may receive an indication of the termination and automatically terminate information sharing as well.

In some embodiments, alliance control module **134** may be configured to cause actions of the alliance to be controlled. Actions may include, for example, attacking an enemy base, adding alliance assets such as virtual troops, commanding alliance assets to move to a specified position, making peace with an enemy, declaring war against other users, accepting new alliance members, and/or other actions that may be performed in relation to an alliance.

In some embodiments, alliance control module **134** may provide one or more controls for issuing commands that cause alliance actions to one or more alliance members. For example, the one or more controls may be provided to secondary display module **128** for communication to secondary client device **150**, where the controls are presented to the user for receiving control inputs.

In some embodiments, certain controls may be provided to some alliance members such as leaders but not provided to other alliance members. In this manner, different alliance members may receive different controls. Alliance control module **134** may use roles assigned to different alliance members to determine which alliance members should receive certain controls.

In some embodiments, messaging module **136** may be configured to receive a message from an alliance member for providing to one or more alliance members. Unlike general communications intended to be broadcast to all members of an alliance or a subset of the alliance, which may be displayed on primary client device **140** and/or secondary client device **150**, messages may be directed to particular secondary devices **150** of identified alliance members. For example, messaging module **136** may provide a messaging service that allows one or members of an alliance to provide a message or communication to one or more members' secondary client device **150**.

In some embodiments, the sending alliance member need not know an identifier of the target secondary client device **150** (such as a phone number or other unique identifier) in order to direct communication to the secondary client device. For example, coordination module **124** may track secondary client devices **150** that have logged on and accordingly identify alliance members and their respective secondary client devices.

The primary display may be communicated to and displayed by a primary client device **140** and the secondary display may be communicated to and displayed by a secondary client device **150**. Primary client device **140** may include a computing device, a monitor, an input device, and/or other devices that allow viewing and/or interaction with the game. Secondary client device may include a generally portable computing device such as a cellular device, a tablet computing device, and/or other generally portable computing device that is configured to send or receive alliance information via the secondary display during gameplay.

The components illustrated in FIG. **1** may be communicably coupled to one another via various communication links. The communication links may include wired or wireless connections. In some embodiments, the communication links may include a network connection that includes any one or more of, for instance, the Internet, an intranet, a PAN (Personal Area Network), a LAN (Local Area Network), a WAN (Wide Area Network), a SAN (Storage Area Network), a MAN (Metropolitan Area Network), a wireless network, a cellular communications network, a Public Switched Telephone Network, and/or other network.

The databases **160** and **162** described herein may be, include, or interface to, for example, an Oracle™ relational database sold commercially by Oracle Corporation. Other databases, such as Informix™, DB2 (Database 2) or other data storage, including file-based, or query formats, platforms, or resources such as OLAP (On Line Analytical Processing), SQL (Standard Query Language), a SAN (storage area network), Microsoft Access™ or others may also be used, incorporated, or accessed. The database may comprise one or more such databases that reside in one or more physical devices and in one or more physical locations. The database may store a plurality of types of data and/or files and associated data or file descriptions, administrative information, or any other data.

Those having skill in the art will recognize that primary client device **140** and secondary client device **150** may each comprise one or more processors, one or more interfaces (to various peripheral devices or components), non-transitory storage media, and/or other components coupled via a bus. The non-transitory storage media, such as non-transitory storage media **138** of game device **120** and non-transitory storage media of primary client device **140** (not illustrated) and non-transitory storage media of secondary client device **150** (not illustrated), may comprise random access memory (RAM), read only memory (ROM), or other memory. The memory may store computer-executable instructions to be executed by the processor as well as data that may be manipulated by the processor. The storage media may comprise floppy disks, hard disks, optical disks, tapes, or other storage media for storing computer-executable instructions and/or data.

In some embodiments, one or more processors (not illustrated in FIG. **1**) of secondary client device **150** may be programmed with an agent such as alliance interface module **152**. Alliance interface module **152** may facilitate communication with game device **120**. For example, alliance interface module **152** may be configured to facilitate a logon process with game device **120** and/or otherwise indicate that the user operation secondary client device **150** is ready to send or receive alliance information.

Alliance interface module **152** may be configured to receive alliance information and display the alliance information on a display device such as a touchscreen of secondary client device **150**. Alliance interface module **152** may also facilitate two-way communication between an alliance member operating secondary client device **150** and another user and/or alliance member. In some embodiments, alliance interface module **152** may expose a messaging interface that allows an alliance member to contact another alliance member via their connected secondary client device, assuming that the other alliance member is logged on or otherwise connected to game device **120**.

In some embodiments, alliance interface module **152** may present one or more controls for controlling an aspect of the alliance. Different controls may be provided to different alliance members. The determination of which controls should be provided may be made at game device **120** and provided to alliance interface module **152** and/or the determination may be made locally by alliance interface module **152**. Such determinations may be based on one or more roles assigned to the alliance member and the nature of the controls, as described herein.

In some embodiments, alliance interface module **152** may allow a user to request from an alliance member permission to join an alliance. In some embodiments, alliance interface module **152** may cause user information such as virtual assets and/or other characteristics of the user to be provided to the alliance member from whom the user is requesting access. In this manner, the alliance member may review the user's credentials in order to determine whether to accept the request to join the alliance.

Other system configurations using a secondary client device for a game may be used as well. For example, commonly owned and co-pending U.S. patent application Ser. No. 13/791,668, filed Mar. 8, 2013, entitled "SYSTEM AND METHOD FOR FACILITATING A GAME THROUGH A PRIMARY CLIENT DEVICE AND IN-GAME CONTENT PURCHASES THROUGH A MOBILE DEVICE," which is incorporated by reference in its entirety herein, describes, among other things, making content purchases using a secondary client device while playing a game using a primary client device.

FIG. **2** illustrates an example of a block diagram **200** showing data flows between various components for displaying a game using a primary display and facilitating communication of alliance information and alliance controls using a secondary display, according to an embodiment of the invention. As illustrated in FIG. **2**, one or more input devices **220** (illustrated in FIG. **2** as input devices **220**A, **220**B, . . . , **220**N) and one or more secondary client devices **150** (illustrated in FIG. **2** as secondary client devices **150**A, **150**B, . . . , **150**N) may be operated by respective users **210** (illustrated in dashed boxes **210**A, **210**B, . . . , **210**N). In some embodiments, as illustrated, users **210** may view and interact with game space **204** displayed on a display device **230** of primary client device **140**. In some embodiments, users **210** may use their own respective primary client devices **140** to interact with game space **204**.

In some embodiments, primary display module **126** may receive at least some alliance information (illustrated in FIG. **2** as alliance information "C") from alliance information module **130**. The visual representation provided to primary client device **140** may include the alliance information such that at least some alliance information is displayed on display device **230**.

Individual users may control or otherwise interact with one or more respective graphical objects **202** (illustrated in FIG. **2** objects **202**A, **202**B, . . . , **202**N) visually represented in game space **204** of a game. For example, using input device **220**A, user **210**A may control graphical object **202**A. Input signals from input devices **220** may be communicated to primary client device **140** and/or primary display module **126** via one or more wired or wireless communication links. One or more graphical objects **208** may be controlled or otherwise interacted with by other users who are not members of an alliance.

Using a respective secondary client device **150**, such as respective mobile devices, individual users **210** may receive alliance information (illustrated in FIG. **2** as alliance information "A" and "B") while playing the game. For example, alliance information module **130** may provide the alliance information to secondary display module **128**, which communicates the alliance information to respective secondary client devices **150** during the game. In some embodiments, secondary display module **128** provides the same or different alliance information to different secondary client devices **150**.

Using a respective secondary client device **150**, individual users **210** may operate different controls for controlling one or more actions of the alliance. Responsive to manipulation of the controls, secondary client device **150** may communicate commands for executing the actions to primary display module **126**, which facilitates the actions to be performed. Although not illustrated for convenience, the commands may be communicated to secondary display module **126** as well.

In some embodiments, a particular alliance member may not be using a secondary client device **150** while playing the game, instead using only primary client device **140**. In these embodiments, secondary display module **128** may cause the alliance information that was destined for the secondary client device **150** to be provided to primary display module **126** for communication to a primary client device **140** being used by the particular alliance member. When the alliance information that was destined for the secondary client device **150** is private information or should otherwise be shared only with the particular alliance member, the alliance information may be provided to the primary client device being used by the particular alliance member if being used only by that alliance member. If primary client device **140** is shared with another alliance member or user who does not have access to the

alliance information, a message indicating that such private alliance information is available may be displayed without displaying the actual private alliance information.

In some embodiments, alliance information provided to primary client device **140** may be the same as or different from the alliance information provided to secondary client device **150**. For example, some alliance information may be provided to both primary client device **140** and secondary client device **150**. Other alliance information may be provided only to primary client device **140**. Still other alliance information may be provided only to secondary client device **150**.

FIG. **3**A illustrates a block diagram **300**A of multiple architectures for interacting with a game device **120**, according to an embodiment of the invention. As illustrated, game device **120** may be communicably coupled to one or more architectures **310** (illustrated in FIG. **3**A as architectures **310**A, **310**B, . . . , **310**N) that may individually connect one or more users to game device **120** for playing the game.

FIG. **3**B illustrates a block diagram **300**B of a first particular architecture **310**A (illustrated in dashed box) for interacting with game device **120**, according to an embodiment of the invention. In the illustrated embodiment, game device **120** may be configured as a networked server device that facilitates online gameplay between one or more users. A particular user or group of users may play the game and send or receive alliance information via primary client device **140** and send or receive alliance information via secondary client device **150**. One or more primary client devices **140** and one or more secondary client devices **150** may have a wireless or wired connection to one or more routers **304** as well. Router **304** may be communicably coupled with game device **120** via a network **302**, which may include one or more networks described herein such as the Internet. Primary client device **150** may include one or more input devices **220** and one or more display devices **230** for displaying the game space.

FIG. **3**C illustrates a block diagram **300**C of a second particular architecture **310**B for interacting with a game device **120**, according to an embodiment of the invention. The configuration and architecture **310**B is similar to architecture **310**A. However, instead of using the same communication channel over network **302** as primary client device **140**, secondary client device **150** may use a separate network connection, such as a cellular communications network **306**. As illustrated, router **304** is omitted for clarity, although primary client device **140** may connect to network **302** via a router.

FIG. **4**A illustrates a block diagram **400**A of an example of a game device **120** locally coupled to one or more primary client devices **140**, one or more input devices **220**, and one or more secondary client devices **150**, according to an embodiment of the invention. In this embodiment, primary client device **140** may include a standalone display device such as a monitor or television set. Game device **120** may provide video and/or audio signals related to the game for displaying on primary client device **140**. One or more users may use a respective user input device **220** to interact with the game space displayed by primary client device **140** (which may, for example, be shared among different users in the same room) and a respective secondary client device **150** for sending or receiving alliance information.

FIG. **4**B illustrates a block diagram **400**B of an example of game devices **120** coupled to one another over a network **302** and individually being locally coupled to a primary client device **140**, one or more input devices **220**, and one or more secondary client devices **150**, according to an embodiment of the invention. The configuration illustrated in block diagram **400**B is similar to the configuration illustrated in block diagram **400**A. However, a game device **120** may be communicably coupled to one or more other game devices **120** over network **302**. For example, as illustrated, game device **120**A may be coupled to game devices **120**B, **120**N, which may each have similar configurations of components (omitted from FIG. **4**A for convenience and indicated by ellipses) as game device **120**A. In this configuration, game devices **120** may form peer-to-peer or other network connections that may be mediated by a server device (not illustrated in FIG. **4**A).

FIG. **5** illustrates examples of secondary displays communicated to and displayed at a secondary client device, according to an embodiment of the invention. In some embodiments, secondary client device **150**A may include a display device **502**A such as a touchscreen or other type of display device. Secondary client device **150**A may receive a secondary display **504**A (e.g., from secondary display module **128**). Secondary display **504**A may be rendered or otherwise displayed by an agent operating on secondary client device **150**A, such as alliance interface module **152** (illustrated in FIG. **1**). In some embodiments, secondary display **504**A may include instructions for rendering the display such as formatting instructions and information to be displayed on the display. In some embodiments, secondary display **504**A includes only information to be displayed such that the agent formats and renders the display.

The secondary display **504**A may provide alliance information and/or controls **510**A (illustrated in FIG. **5** as alliance info/controls **510**A) such that a user may receive or send alliance information. In some embodiments, the user may input commands for controlling an action of the alliance using the provided controls.

In some embodiments, secondary client device **150**B may include a display device **502**B such as a touchscreen or other type of display device. Secondary client device **150**B may receive a secondary display **504**B (e.g., from secondary display module **128**). Secondary display **504**B may be similar to secondary display **504**A except that secondary display **504**B provides (or reserves space on the display for) user-specific information **512**. User-specific information **512** may include messages targeted for the user (e.g., from another user), game-related information pertaining to the user (e.g., the user's inventory of virtual items, status, etc.), device information (e.g., battery level, phone status, etc.) of secondary client device **150**B, and/or other information that may be specific to the user.

As would be appreciated, secondary displays **504**A and **504**B may individually present navigational controls such that a user may navigate between viewing alliance information, controls, user-specific information, and/or other information to be presented on the secondary displays.

FIG. **6** illustrates examples of different controls displayed on a display device, according to an embodiment of the invention. Display devices **602** (illustrated in FIG. **6** as display devices **602**A, **602**B, . . . , **602**N) may be configured as part of or coupled to a primary client device or a secondary client device. In other words, at least some controls may be provided on primary client device and at least some controls (e.g., the same or different controls) may be provided on secondary client device.

The controls may include conventional user input components such as text input boxes, selection boxes, etc. In some embodiments, controls for controlling an action may be different for different users depending on, for example, their respective roles. In these embodiments, the appropriate controls may be identified by game device **120** (illustrated in FIG.

1) and/or identified locally by secondary client device **150** (illustrated in FIG. **6** as secondary client device **150**A, **150**B, . . . , **150**N).

For example, display device **602**A may display an attack base control **602**, a raise army control **604**, and/or other controls **620**. The different controls may reflect the different roles for one or more alliance members for whom the attack base controls **602**, raise army control **604**, and/or other controls **620** are intended. Display device **602**B may provide a different set of controls, such as a raise army control **604**, a broadcast message control **606**, and/or other controls **622**. These different controls may reflect the different roles for one or more alliance members for whom the raise army control **604**, the broadcast message control **606**, and/or other controls **622** are intended. Likewise, display device **602**B may provide a different set of controls such as other controls **624**, reflecting the different roles for one or more alliance members for whom the other controls **624** are intended.

FIG. **7** illustrates examples of primary displays corresponding to respective alliances and sub-sets of alliances, according to an embodiment of the invention. Game device **120** may communicate primary display **702** corresponding to an alliance **720** and primary display **706** corresponding to alliance **750**. For example, primary display **702** may be communicated to one or more primary client devices being used by members of alliance **720** as determined by, for example, coordination module **124** illustrated in FIG. **1**. Likewise, primary display **706** may be communicated to one or more primary client devices being used by members of alliance **750**.

In some embodiments, as illustrated in FIG. **7**, primary display **702** may be augmented with additional information **704** (illustrated in FIG. **7** as additional info **704**). Additional information **704** may include information intended for certain alliance members but not others. For example, alliance **720** may include alliance sub-set **730** that includes one or more alliance members **732** (illustrated in FIG. **7** as alliance members **732**A, **732**B, . . . , **732**N) and alliance sub-set **740** that includes one or more alliance members **742** (illustrated in FIG. **7** as alliance members **742**A, **742**B, . . . , **742**N). Although not illustrated, alliance **750** may similarly have alliance members and/or sub-sets of alliance members.

An alliance member **742** may be assigned with a role that grants the alliance member access to additional information **704** while an alliance member **732** may not be assigned with such a role. For example, alliance member **742** may be assigned with a leader role that allows the alliance member to receive certain alliance information that may be restricted to viewing by only leaders. Accordingly, different primary displays may be communicated to different alliance members, which may depend on their assigned roles. Although illustrated as being the same primary display **702** augmented with additional information **704**, an entirely different primary display may be communicated to alliance sub-set **740**. Furthermore, although only two sub-sets of alliance members is illustrated in FIG. **7**, an alliance may include more or less sub-sets of alliance members as well.

FIG. **8** illustrates a flowchart of a process **800** for facilitating a multi-user game that allows users to form alliances and communicating alliance information during the game to mobile devices associated with alliance members, according to an embodiment of the invention. The various processing operations and/or data flows depicted in FIG. **8** (and in the other drawing figures) are described in greater detail herein. The described operations may be accomplished using some or all of the system components described in detail above and, in some implementations, various operations may be performed in different sequences and various operations may be omitted. Additional operations may be performed along with some or all of the operations shown in the depicted flow diagrams. One or more operations may be performed simultaneously. Accordingly, the operations as illustrated (and described in greater detail below) are exemplary by nature and, as such, should not be viewed as limiting.

In an operation **802**, a primary display that includes information that facilitates visual presentation of a view of a game space of a multi-user game may be communicated to a primary client device. In an operation **804**, alliance information that describes an alliance having a plurality of alliance members of the multi-user game may be obtained. In an operation **806**, respective secondary client device such as mobile devices of one or more appropriate alliance members to whom to communicate the alliance information may be identified. An appropriate alliance member may include an alliance member who has permission to view or otherwise interact with the obtained alliance information. For example, an alliance member may have permission to view or interact with the alliance information based on a assigned role to that alliance member. In an operation **808**, the alliance information may be communicated to respective secondary client devices of the appropriate one or more of the alliance members.

FIG. **9** illustrates a flowchart of a process **900** for displaying controls for the alliance on a secondary client device, according to an embodiment of the invention. In an operation **902**, communication with a game device that presents a view of a game space of a game to a primary client device may be facilitated. For example, the secondary client device may logon to a game device for playing the game (in addition to use of the primary client device for playing the game). In an operation **904**, one or more controls for controlling an action of the alliance may be displayed. The one or more controls may be displayed based on a role assigned to the alliance member operating the secondary client device. In an operation **906**, a command may be received via the one or more controls. For example, a user may operate the one or more controls to provide the command. In an operation **908**, the command may be communicated to a game device for controlling the action. The game device may execute the command and the resulting command may be reflected in a primary display communicated from the game device to a primary display device operated or viewed by the user.

FIG. **10** illustrates a flowchart of a process **1000** for selectively communicating alliance information to a primary client device and/or to a secondary client device, according to an embodiment of the invention.

In an operation **1002**, alliance information for an alliance may be obtained. In an operation **1004**, a determination of whether the obtained alliance information should be communicated generally to all alliance members may be made. If the obtained alliance information is generally available to all alliance members, the obtained alliance information may be communicated to one or more primary client devices used by all users who are alliance members in an operation **1006**. In some embodiments, the obtained alliance information that is generally available to all alliance members may be communicated to secondary client members of all users who are alliance members instead of or in addition to the primary client devices in operation **1006**.

In an operation **1008**, a particular alliance member may be identified. In an operation **1010**, a determination of whether the particular alliance member has access to the obtained alliance information may be made. If the particular alliance member does not have access, a determination of whether

there are additional alliance members to be processed may be made in an operation **1012**. If there are additional members, processing may return to operation **1008**.

Returning to operation **1010**, if the alliance member has access to the obtained alliance information, the obtained alliance information may be communicated to a secondary client device used by the alliance member in an operation **1014**. A determination of whether there are additional alliance members to be processed may be made in an operation **1012**, where processing may proceed as described above.

Although described with respect to video games, the disclosure may be used in other contexts in which a virtual space may be expressed at a primary client device and alliance information may be communicated via a secondary client device during expression of the virtual space. Other embodiments, uses and advantages of the invention will be apparent to those skilled in the art from consideration of the specification and practice of the invention disclosed herein. The specification should be considered exemplary only, and the scope of the invention is accordingly intended to be limited only by the following claims.

What is claimed is:

1. A multi-user game computing system that communicates alliance information during a game to mobile devices associated with alliance members, the system comprising:

one or more physical computer processors configured to execute computer program modules, the computer program modules comprising:

a primary display module configured to determine and effectuate presentation of a view of a game space on a primary client device, the view forming a multi-user graphical user interface through which multiple users present at the primary client device input game commands for concomitant gameplay by the multiple users of a multi-user game within the game space;

a secondary display module configured to: (i) obtain alliance information that describes an alliance having multiple alliance members, (ii) identify respective mobile devices of the alliance members participating in gameplay through the multi-user graphical user interface presented on the primary client device, and (iii) communicate the alliance information to the respective mobile devices of the alliance members for presentation to the alliance members on the respective mobile devices in conjunction with participation in gameplay through the multi-user graphical user interface presented on the primary client device, such alliance information being supplemental information for the alliance members during gameplay; and

an alliance management module configured to classify alliance information into one or more categories individually associated with a level of security such that at least some categories of alliance information are accessible by only a subset of the alliance members.

2. The computing system of claim **1**, further comprising:

an alliance management module configured to form the alliance based on identifications of respective users that are to form the alliance and assign different ones of the alliance members with respective roles in the alliance.

3. The computing system of claim **1**, wherein the alliance management module is further configured to:

form the alliance based on identifications of respective users that form the alliance and assign different ones of the alliance members with respective roles in the alliance, wherein an individual role is used to identify at least one category of alliance information for which the role has access.

4. The computing system of claim **3**, wherein the obtained alliance information is accessible by only a subset of the alliance members, wherein the appropriate ones of the alliance members includes only the subset of the alliance members, wherein the secondary display module communicates the obtained alliance information to respective mobile devices of the subset of the alliance members.

5. The computing system of claim **1**, wherein the primary display module is further configured such that at least some of the alliance information is included on at least a portion of the multi-user graphical user interface presented on the primary client device.

6. The computing system of claim **1**, wherein the secondary display module is further configured to provide user-specific information along with the alliance information to the respective mobile devices of the alliance members for presentation on the respective mobile devices of the appropriate ones of the alliance members.

7. The computing system of claim **1**, further comprising:

an alliance control module configured to receive one or more (lame control commands from the secondary client devices and cause actions with in the game corresponding to the received one or more game control commands.

8. A computer-implemented method for communicating alliance information during a game to mobile devices associated with alliance members, the method being implemented in a computer that includes one or more processors configured to execute computer program modules, the method comprising:

determining, by a primary display module, a view of a game space for a primary client device, the view forming a multi-user graphical user interface through which multiple users present at the primary client device input game commands for concomitant gameplay by the multiple users of a multi-user game within the game space;

effectuating presentation, by the primary display module, of the view of the game space on the primary client device;

obtaining, by a secondary display module, alliance information that describes an alliance having multiple alliance members;

identifying, by the secondary display module, respective mobile devices of the alliance members participating in gameplay through the multi-user graphical user interface presented on the primary client device;

communicating, by the secondary display module, the alliance information to the respective mobile devices of the alliance members for presentation to the alliance members on the respective mobile devices in conjunction with participation in gameplay through the multi-user graphical user interface presented on the primary client device, such alliance information being supplemental information for the alliance members during gameplay; and

classifying, by an alliance management module, alliance information into one or more categories individually associated with a level of security such that at least some categories of alliance information are accessible by only a subset of the alliance members.

9. The computer-implemented method of claim **8**, the method further comprising:

forming, by an alliance management module, the alliance based on identifications of respective users that are to form the alliance and assigning, by the alliance management module, different ones of the alliance members with respective roles in the alliance.

10. The computer-implemented method of claim **8**, the method further comprising:

forming, by the alliance management module, the alliance based on identifications of respective users that form the alliance and assigning, by the alliance management module, different ones of the alliance members with respective roles in the alliance, wherein an individual role is used to identify at least one category of alliance information for which the role has access.

11. The computer-implemented method of claim **10**, wherein the obtained alliance information is accessible by only a subset of the alliance members, wherein the appropriate ones of the alliance members includes only the subset of the alliance members, wherein communicating the obtained alliance information comprises communicating the obtained alliance information to respective mobile devices of the subset of the alliance members.

12. The computer-implemented method of claim **8**, the method further comprising:

providing, by the primary display module, at least some of the alliance information such that at least some of the alliance information is included on at least a portion of the multi-user graphical user interface presented on the primary client device.

13. The computer-implemented method of claim **8**, the method further comprising:

providing, by the secondary display module, user-specific information along with the alliance information to the respective mobile devices of the alliance members for presentation on the respective mobile devices of the appropriate ones of the alliance members.

14. The computer-implemented method of claim **8**, the method further comprising:

receiving, by an alliance control module, one or more came control commands from the secondary client devices; and

causing, by the alliance control module, actions with in the game corresponding to the received one or more game control commands.

* * * * *